Dell Edge Gateway

5000 Series

Installation and Operation Manual

Computer Model: Dell Edge Gateway 5000/5100
Regulatory Model: N01G/N02G
Regulatory Type: N01G001/N02G001

Notes, cautions, and warnings

NOTE: A NOTE indicates important information that helps you make better use of your product.

CAUTION: A CAUTION indicates either potential damage to hardware or loss of data and tells you how to avoid the problem.

WARNING: A WARNING indicates a potential for property damage, personal injury, or death.

© 2016-2019 Dell Inc. or its subsidiaries. All rights reserved. Dell, EMC, and other trademarks are trademarks of Dell Inc. or its subsidiaries. Other trademarks may be trademarks of their respective owners.

2019 - 02

Rev. A05

Contents

1 Overview 6

2 System views 7

System—Front 7

System—Front (LED indicators) 8

System—Bottom 8

Serial port (RS232) connector mapping 9

CANbus port connector mapping 9

RS485 connector mapping 10

RS422/485 connector mapping 10

System—Bottom (DIP switches) 10

System—Top 11

Intrusion-detection connector mapping 11

HDMI connector mapping 12

System—Left 13

24 V AC/DC power port 13

19.5 V DC power adapter port 14

System—Right 15

3 Setting up your Dell Edge Gateway 16

Professional installation instructions 16

Instructions d'installation professionnelles 17

Federal Communication Commission Interference Statement 17

Industry Canada Statement 18

Setting up the Edge Gateway 19

Powering on the Edge Gateway 19

Mounting the Edge Gateway on the wall 22

Mounting the Edge Gateway on a DIN rail 24

Inserting a micro-SIM card and activating your mobile broadband 26

4 Setting up your operating system 30

Windows 10 IoT Enterprise LTSB 30

Overview 30

Boot up and log in 30

Restoring Windows 10 IoT Enterprise LTSB 30

Windows 10 IoT Enterprise LTSB basic functions 30

Common port mappings 32

Snappy Ubuntu Core 15 and 16 32

Overview 32

Boot up and log in 33

Restoring Ubuntu Snappy 33

Updating operating system and applications 35

Ubuntu Core OS basic functions....36
UEFI capsule update....37
Watchdog Timer....38
Security....38
Accessing Snappy Store/Snapweb....39
Cloud LED On/Off....40
Serial Port....40
Minicom....41
Expansion IO Module....42
Zigbee....42
Controller Area Network....42
Network Manager – Ubuntu Core 15....43
Network Manager – Ubuntu Core 16....44
Flashing the BIOS....45
Wind River Linux....46
Overview....46
Boot up and login....46
Restoring Wind River Linux....47
Wind River Linux Basic Functions....48

5 System specifications....62
Component types....62
Operating systems....62
Processor....62
Memory....63
Drives and removable storage....63
Communications—WLAN antenna....63
Communications—WWAN antenna....65
Graphics/video controller....69
External ports and connectors....69
Dimensions and weight....70
Product dimensions and weight....70
Packaging dimensions and weight....71
Mounting dimensions....71
Environmental and operating conditions....71
Environmental conditions—System....71
Environmental conditions—IO module....72
Environmental conditions - Power module....73
Environmental conditions - Enclosure....74
Operating conditions....74
Power....75
Power adapter (optional)....75
GPIOs voltage levels....75
3.0 V CMOS coin-cell battery....76
Security....76
Software....76

Environmental....77
Service and support....77

6 I/O Module Overview....78
IO module (optional) views....78
IO module—Front....78
IO module—Top....79
IO module—Bottom....80
Setting up the IO module....80
Installing the PCIe card into the IO module....83

7 Power Module Overview....86
Power module (optional) views....86
Power module—Front....87
Power module—Bottom....88
Power module—Top....90
Power module—Right....91
Setting up the power module....91
Specifications - Power Module....94

8 Enclosure Overview....96
Enclosure (optional) view....96
Enclosure - Side....96
Setting up the enclosure....97

9 Setting up the Zigbee dongle....102

10 BIOS defaults....103
General....103
System configuration....103
Security....103
Secure Boot....104
Performance....104
Power Management....104
POST Behavior....105
Maintenance....105

11 Other documents you may need....106

12 Contacting Dell....107
Regulatory and environmental compliance....107

1

Overview

The Dell Edge Gateway 5000/5100 series allows you to connect to network enabled devices wired or wirelessly, and manage them remotely in your existing network ecosystem. The system can also be mounted on the wall using the Dell approved wall mount kit or mounted into your existing rack infrastructure using the DIN-rail mounting bracket. The system runs on Windows 10 Enterprise, Ubuntu Snappy, or the Wind River Linux operating systems. As part of a complete interoperable building automation system, the Edge Gateway provides precise monitoring and control of connected points. The I/O expansion module provides the Edge Gateway with extra inputs and an output module. The power expansion module provides the Edge Gateway with power redundancy options by allowing you to connect a 24V AC/DC, a 19.5V DC, and a battery back up simultaneously.

If the Edge Gateway is set up as a web server, it offers the capability for configuration from a web browser. Configure I/Os, set up objects, and monitor present values from a browser.

2

System views

System—Front

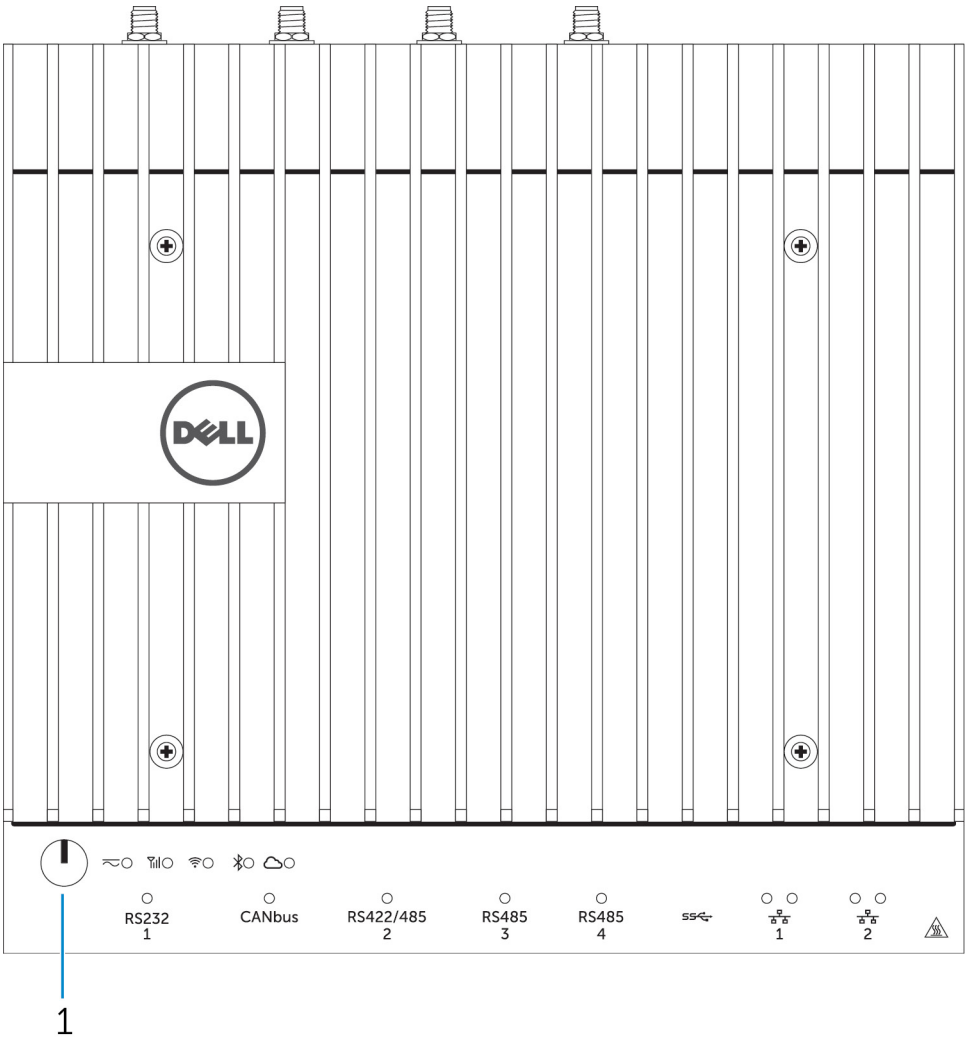

Features		
1	Power button	Press and hold for 2 seconds to turn on the system if it is turned off.

NOTE: For more details about the LED indicators on the front of the system, see LED indicators.

System—Front (LED indicators)

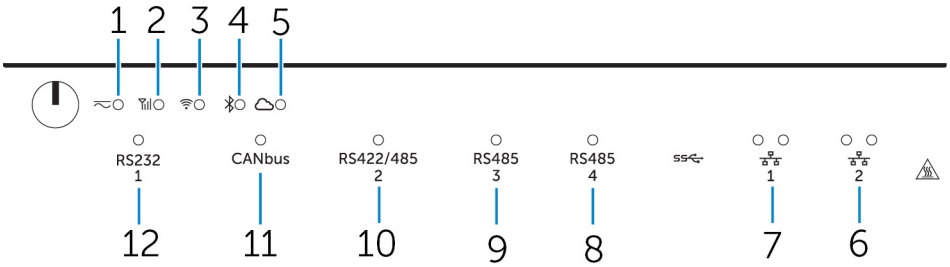

Features		
1	Power status LED	Indicates the power-state of the system.
2	Mobile broadband status LED	Indicates the mobile broadband status and network activity.
3	Wireless status LED	Indicates the wireless connectivity status and network activity.
4	Bluetooth status LED	Indicates the Bluetooth status and activity.
5	Cloud connection status LED	Indicates the cloud connection status.
6	Network status LED	Indicates the connectivity status and network activity.
7	Network status LED	Indicates the connectivity status and network activity.
8	RS485 port status LED	Provides the status of the RS485 port connections.
9	RS485 port status LED	Provides the status of the RS485 port connections.
10	RS422/485 port status LED	Provides the status of the RS422/485 port connections.
11	CANbus port status LED	Provides the status of the CANbus port connection.
12	Serial port status LED	Provides the status of the serial port connection.

System—Bottom

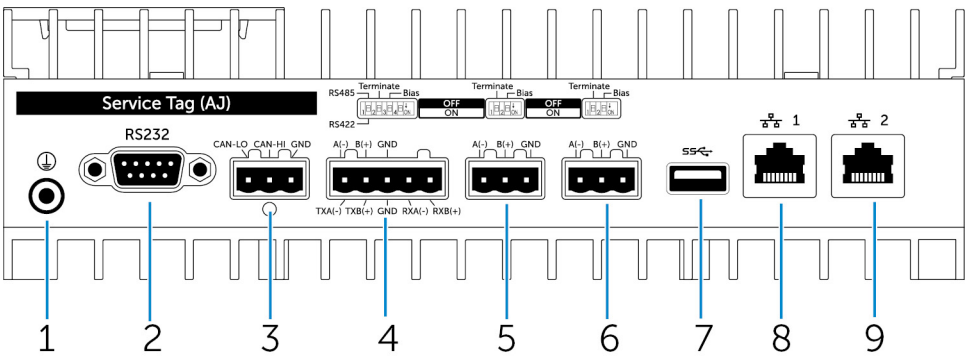

Features		
1	Earth ground	Connect the grounding cable to the system.
2	Serial port	Connect to a serial port enabled device such as a printer.
3	CANbus port	Connect to a CANbus port enabled device or dongle.
4	RS422/485 port	Connect a RS422/485 device.

Features		
5	RS485 port	Connect a RS485 device.
6	RS485 port	Connect a RS485 device.
7	USB 3.0 port	Connect a USB 3.0 device.
8	Network port	Connect an Ethernet (RJ45) cable from a router or a broadband modem for network or internet access.
9	Network port	Connect an Ethernet (RJ45) cable from a router or a broadband modem for network or internet access.

NOTE: For more details about the DIP switches on the bottom of the system, see DIP switches.

NOTE: For RS422 and RS485:

- Termination is 120-ohms between the members of the differential pair when enabled.
- Bias is 4.7k pull-up (5V) / pull-down (Gnd) when enabled.

Serial port (RS232) connector mapping

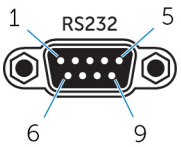

Pin	Signal	Pin	Signal
1	DCD	6	DSR
2	RXD	7	RTS
3	TXD	8	CTS
4	DTR	9	RI
5	GND		

NOTE: This is a standard serial port connector.

CANbus port connector mapping

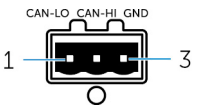

PIN	Signal
1	CAN-LO
2	CAN-HI
3	GND
Manufacturer part number	Molex 39530-5503 https://www.molex.com/ **NOTE: This part number is for reference only and is subjected to change.**

RS485 connector mapping

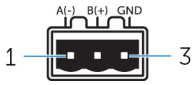

Pin	Signal
1	A(-)
2	B(+)
3	GND
Manufacturer part number	Molex 359530-5503 https://www.molex.com/ **NOTE: This part number is for reference only and is subjected to change.**

RS422/485 connector mapping

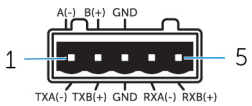

Pin	Signal
1	TXA(-) / A(-)
2	TXB(+) / B(+)
3	GND
4	RXA(-)
5	RXB(+)
Manufacturer part number	Molex 359530-5505 https://www.molex.com/ **NOTE: This part number is for reference only and is subjected to change.**

System—Bottom (DIP switches)

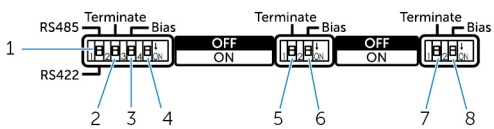

Feature		
1	RS422/RS485 port toggle switch	Toggle between RS422 or RS485 standard.
2	RS422/RS485 port resistor switch	Enable/disable the differential termination resistor.
3	RS422/RS485 port bias resistor switch	Enable/disable the bias resistor for the RS422/RS485 port.
4	ePSA diagnostic switch	When the position of the switch changes, the system starts in ePSA (Enhanced Preboot System Assessment) mode on the next start.

Feature		
5	RS485 port resistor switch	Enable/disable the differential termination resistor for RS485.
6	RS485 port bias resistor switch	Enable/disable the bias resistor for the RS485 port.
7	RS485 port resistor switch	Enable/disable the differential termination resistor for RS485.
8	RS485 port bias resistor switch	Enable/disable the bias resistor for the RS485 port.

System—Top

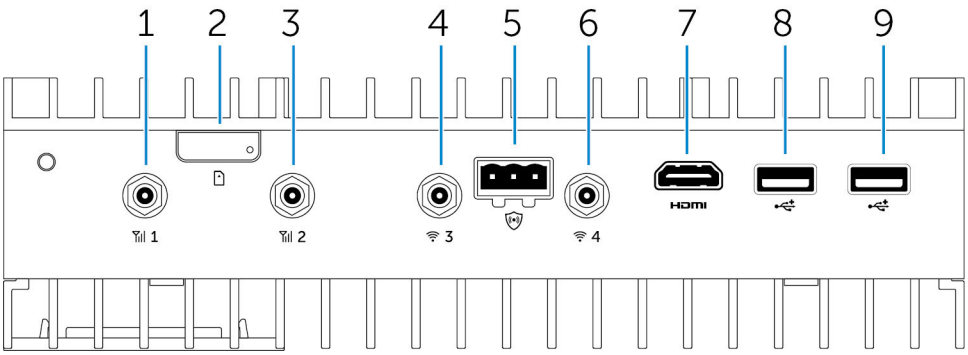

Features		
1	Mobile broadband antenna port (port one)	Connect an antenna to increase the range and strength of the mobile broadband signals.
2	Micro-SIM card slot	Insert a micro-SIM card to connect to a mobile broadband network.
3	Mobile broadband antenna port (port two)	Connect an antenna to increase the range and strength of the mobile broadband signals.
4	Wi-Fi antenna port (port three)	Connect an antenna to increase the range and strength of Wi-Fi signals.
5	Intrusion detection connector	Connect an intrusion detection switch to detect any intrusion into the optional Rugged Enclosure.
6	Wi-Fi antenna port (port four)	Connect an antenna to increase the range and strength of Wi-Fi signals.
7	HDMI port	Connect a monitor or other HDMI device. Provides video and audio output. Hot-plugging is supported on Windows 10 and Ubuntu only.
8	USB 2.0 port	Connect a USB 2.0 device.
9	USB 2.0 port	Connect a USB 2.0 device.

NOTE: The antenna is shipped in a separate accessory box along with your Edge Gateway.

Intrusion-detection connector mapping

Pin	Signal
1	GND
2	Intrusion detection
3	Cable detection
Manufacturer part number	Molex 39530-5503 https://www.molex.com/ **NOTE: This part number is for reference only and is subjected to change.**

HDMI connector mapping

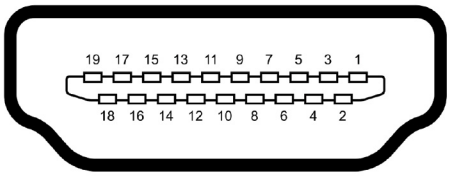

Pin	Signal
1	TMDS Data2+
2	TMDS Data2 Shield
3	TMDS Data2–
4	TMDS Data1+
5	TMDS Data1 Shield
6	TMDS Data1–
7	TMDS Data0+
8	TMDS Data0 Shield
9	TMDS Data0–
10	TMDS Clock+
11	TMDS Clock Shield
12	TMDS Clock–
13	Reserved
14	Reserved
15	SCL
16	SDA
17	Ground
18	+5 V
19	Hot Plug Detect

System—Left

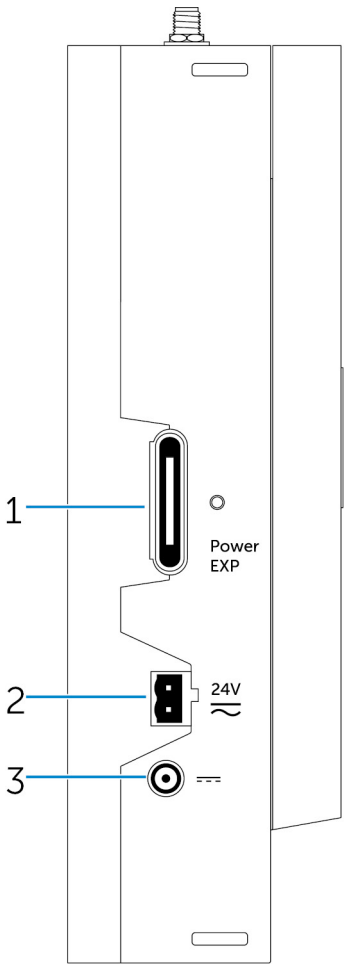

Features		
1	Power module expansion port	Connect an external power module for increased power options.
2	24 V AC/DC power Phoenix connector	Connect an 24 V AC/DC power connector to provide power to your system.
3	19.5 V DC power adapter port	Connect a 19.5 V DC power adapter connector to provide power to your system.

24 V AC/DC power port

Pin	Polarity
1	AC/DC-IN
2	Positive/Negative

Manufacturer part number	Molex 39530-0502 https://www.molex.com/ **NOTE: This part number is for reference only and is subjected to change.**

19.5 V DC power adapter port

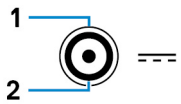

Pin	Polarity
1	DC Negative
2	DC Positive

Manufacturer part number	SINGATRON 2DC-S060-029F http://www.singatron.com/ **NOTE: This part number is for reference only and is subjected to change.**

System—Right

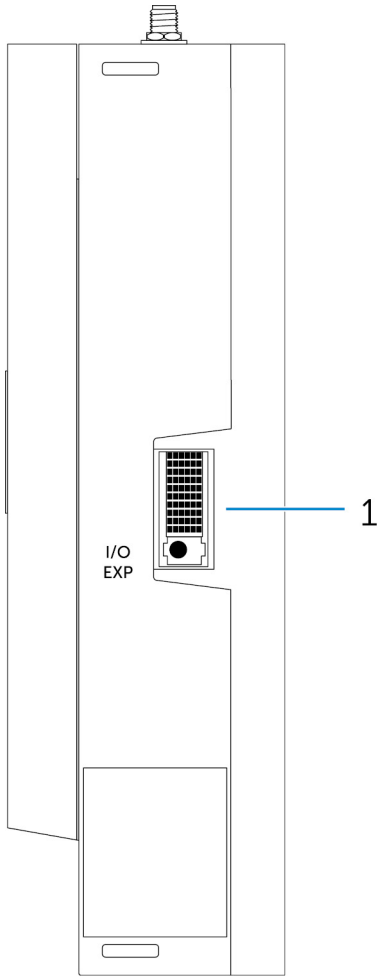

Features		
1	IO expansion port	Connect an external expansion module for additional IO ports.

3

Setting up your Dell Edge Gateway

WARNING: Before you begin any of the procedures in this section, read the safety information that shipped with your system. For additional best practices information, go to www.dell.com/regulatory_compliance.

WARNING: When installing the Gateway, the responsible party or integrator shall use the AC Adapter provided with the Dell Edge Gateway, or connect to a 24Vac or 24Vdc power source already present as part of the clients installation.

WARNING: The Dell AC Adapter (full-wave rectified and have no built-in isolation transformer) is acceptable for use up to ambient temperature of 40°C and is a limited power source, SELV/Limited Energy Circuit, Class 2 power source. If ambient temperature of the installation exceeds 40 °C then use the 24Vac or 24Vdc power available as part of the installation.

WARNING: Always make sure that the available power source matches the required input power of the Dell Edge Gateway, check the input power markings next to power connector(s) before making connections. The 24 V power source must be compliant with local Electrical Codes and Regulations.

WARNING: To ensure the protection provided by Dell Edge Gateway is not impaired, do not use or install the system in any manner other than that which is specified in this manual.

WARNING: When installing the Gateway use acable appropriate for the load currents: 3-core cable rated 5 A at 90 °C (194 °F) minimum, which conform to either IEC 60227 or IEC 60245. The system accepts cables from 0.8 to 2.5 mm (18 to 14 AWG).

WARNING: The symbol indicates hot surface or adjacent hot surface that can obtain temperature during normal use that can cause a burn. Allow equipment to cool off or use protective gloves when handling to reduce risk of a burn.

WARNING: If a battery is included as part of System/Network, battery must be must be installed with appropriate enclosure in accordance with local Fire and Electrical Codes and Laws.

WARNING: When installing the Power Module, use a cable appropriate for the load currents: 3-core cable rated 15 A at 90 °C (194 °F) minimum, which conform to either IEC60227 or IEC 60245. The Gateway accepts cables of 14 AWG minimum.

WARNING: Before installing that all of three power inputs (Terminal Block/Power Jack/Battery Input) in power module shall be protected by the 20 A fuses or circuit-breakers(over current protection device) in front of this system.

WARNING: The system is for installation in a suitable industrial enclosure (provides electrical, mechanical and fire hazard protection).

WARNING: The core module only can be wall mounted (without the need for an additional enclosure)

WARNING: Only Sealed Lead Acid (SLA) battery rated 50Ah (or less) shall be used

Professional installation instructions

Installation personnel

This product is designed for specific applications and needs to be installed by qualified personnel with RF and regulatory related knowledge. The general user shall not attempt to install or change the setting.

Installation location

The product shall be installed at a location where the radiating antenna is kept 20 cm from nearby persons in its normal operation condition in order to meet regulatory RF exposure requirements.

External antenna

Use only the antenna(s) which have been approved by the applicant. Non-approved antenna(s) may produce unwanted spurious or excessive RF transmitting power which may lead to a violation of FCC/IC limits and is prohibited.

Installation procedure

Please refer to user's manual for the detail.

WARNING: Please carefully select the installation position and make sure that the final output power does not exceed the limits set forth in relevant rules. The violation of these rules could possibly lead to serious federal penalties.

Instructions d'installation professionnelles

Le personnel d'installation

Ce produit est conçu pour des applications spécifiques et doit être installé par un personnel qualifié avec RF et connaissances connexes réglementaire. L'utilisateur ne doit pas tenter générale d'installer ou de modifier le réglage.

Lieu d'installation

Le produit doit être installé à un endroit où l'antenne de rayonnement est maintenue à 20 cm de personnes à proximité dans son état de fonctionnement normal, afin de répondre aux exigences réglementaires d'exposition aux radiofréquences.

Antenne externe

Utilisez uniquement l'antenne(s) qui ont été approuvés par le demandeur. Antenne (s) peuvent produire de l'énergie RF parasite indésirable ou excessive transmission qui peut conduire à une violation des normes de la FCC / IC est interdite et non-approuvé.

Procédure d'installation

ATTENTION: S'il vous plaît choisir avec soin la position d'installation et assurez-vous que la puissance de sortie final ne dépasse pas les limites fixées dans les règles pertinentes. La violation de ces règles pourrait conduire à des sanctions fédérales graves.

Federal Communication Commission Interference Statement

This device complies with Part 15 of the FCC Rules. Operation is subject to the following two conditions: (1) This device may not cause harmful interference, and (2) this device must accept any interference received, including interference that may cause undesired operation.

This equipment has been tested and found to comply with the limits for a Class B digital device, pursuant to Part 15 of the FCC Rules. These limits are designed to provide reasonable protection against harmful interference in a residential installation. This equipment generates, uses and can radiate radio frequency energy and, if not installed and used in accordance with the instructions, may cause harmful interference to radio communications. However, there is no guarantee that interference will not occur in a particular installation. If this equipment does cause harmful interference to radio or television reception, which can be determined by turning the equipment off and on, the user is encouraged to try to correct the interference by one of the following measures:

- Reorient or relocate the receiving antenna.
- Increase the separation between the equipment and receiver.
- Connect the equipment into an outlet on a circuit different from that to which the receiver is connected.
- Consult the dealer or an experienced radio/TV technician for help.

FCC Caution:

- Any changes or modifications not expressly approved by the party responsible for compliance could void the user's authority to operate this equipment.

- This transmitter must not be co-located or operating in conjunction with any other antenna or transmitter.

Radiation Exposure Statement:

This equipment complies with FCC radiation exposure limits set forth for an uncontrolled environment. This equipment should be installed and operated with minimum distance 20cm between the radiator & your body.

NOTE: The country code selection is for non-US model only and is not available to all US model. Per FCC regulation, all WiFi product marketed in US must fixed to US operation channels only.

Industry Canada Statement

This device complies with Industry Canada license-exempt RSS standard(s). Operation is subject to the following two conditions:

1. this device may not cause interference, and
2. this device must accept any interference, including interference that may cause undesired operation of the device.

Le présent appareil est conforme aux CNR d'Industrie Canada applicables aux appareils radio exempts de licence. L'exploitation est autorisée aux deux conditions suivantes:

1. l'appareil ne doit pas produire de brouillage, et
2. l'utilisateur de l'appareil doit accepter tout brouillage radioélectrique subi, même si le brouillage est susceptible d'en compromettre le fonctionnement.

This Class B digital apparatus complies with Canadian ICES-003.

Cet appareil numérique de la classe B est conforme à la norme NMB-003 du Canada.

This device complies with RSS-210 of Industry Canada. Operation is subject to the condition that this device does not cause harmful interference.

Cet appareil est conforme à la norme RSS-210 d'Industrie Canada. L'opération est soumise à la condition que cet appareil ne provoque aucune interférence nuisible.

This device and its antenna(s) must not be co-located or operating in conjunction with any other antenna or transmitter, except tested built-in radios.

Cet appareil et son antenne ne doivent pas être situés ou fonctionner en conjonction avec une autre antenne ou un autre émetteur, exception faites des radios intégrées qui ont été testées.

The County Code Selection feature is disabled for products marketed in the US/Canada.

La fonction de sélection de l'indicatif du pays est désactivée pour les produits commercialisés aux États-Unis et au Canada.

Radiation Exposure Statement: This equipment complies with IC radiation exposure limits set forth for an uncontrolled environment. This equipment should be installed and operated with minimum distance 20cm between the radiator & your body.

Déclaration d'exposition aux radiations: Cet équipement est conforme aux limites d'exposition aux rayonnements IC établies pour un environnement non contrôlé. Cet équipement doit être installé et utilisé avec un minimum de 20 cm de distance entre la source de rayonnement et votre corps.

Caution:

1. The device for operation in the band 5150-5250 MHz is only for indoor use to reduce the potential for harmful interference to co-channel mobile satellite systems;
2. The maximum antenna gain permitted for devices in the bands 5250-5350 MHz and 5470-5725 MHz shall comply with the eirp limit; and

3. The maximum antenna gain permitted for devices in the band 5725-5825 MHz shall comply with the eirp limits specified for point-to-point and non point-to-point operation as appropriate.
4. The worst-case tilt angle(s) necessary to remain compliant with the eirp elevation mask requirement set forth in Section 6.2.2(3) shall be clearly indicated.
5. Users should also be advised that high-power radars are allocated as primary users (i.e. priority users) of the bands 5250-5350 MHz and 5650-5850 MHz and that these radars could cause interference and/or damage to LE-LAN devices.

Avertissement:

1. Les dispositifs fonctionnant dans la bande 5150-5250 MHz sont réservés uniquement pour une utilisation à l'intérieur afin de réduire les risques de brouillage préjudiciable aux systèmes de satellites mobiles utilisant les mêmes canaux;
2. Le gain maximal d'antenne permis pour les dispositifs utilisant les bandes 5250-5350 MHz et 5470-5725 MHz doit se conformer à la limite de p.i.r.e.;
3. Le gain maximal d'antenne permis (pour les dispositifs utilisant la bande 5725-5825 MHz) doit se conformer à la limite de p.i.r.e. spécifiée pour l'exploitation point à point et non point à point, selon le cas.
4. Les pires angles d'inclinaison nécessaires pour rester conforme à l'exigence de la p.i.r.e. applicable au masque d'élévation, et énoncée à la section 6.2.2 3), doivent être clairement indiqués.
5. De plus, les utilisateurs devraient aussi être avisés que les utilisateurs de radars de haute puissance sont désignés utilisateurs principaux (c.-à-d., qu'ils ont la priorité) pour les bandes 5250-5350 MHz et 5650-5850 MHz et que ces radars pourraient causer du brouillage et/ou des dommages aux dispositifs LAN-EL.

Setting up the Edge Gateway

Powering on the Edge Gateway

1. Install the Edge Gateway on the wall mount using a wall mounting kit.

   or

   Install the Edge Gateway on the rack infrastructure using DIN-rail mounting brackets.

   NOTE: In some environments where the Edge Gateway is installed, a more robust mounting method is required. For example, in marine applications, due to vibrations unique to that environment, only a wall mount should be used.

2. Connect a network cable—optional.

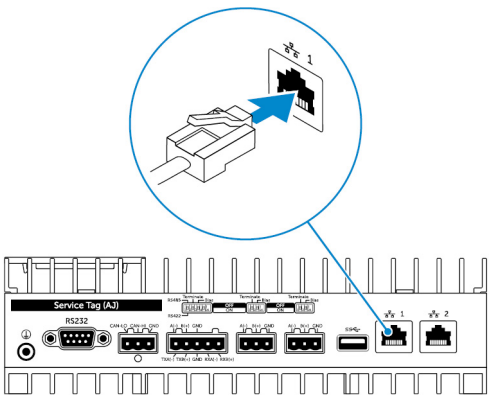

3. Install the WLAN antenna to enable the wireless connections—optional.

   NOTE: The antenna is shipped in a separate accessory box along with your Edge Gateway.

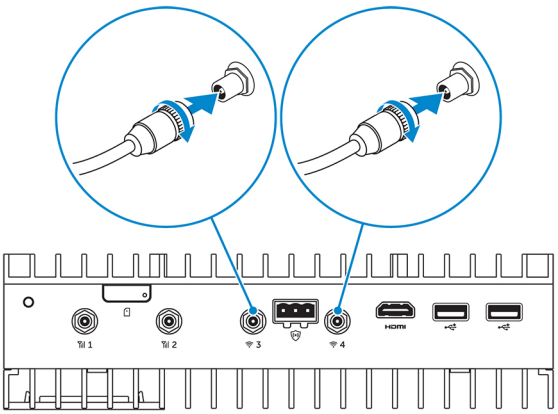

4. Install the WWAN antenna to enable the wireless connections—optional.

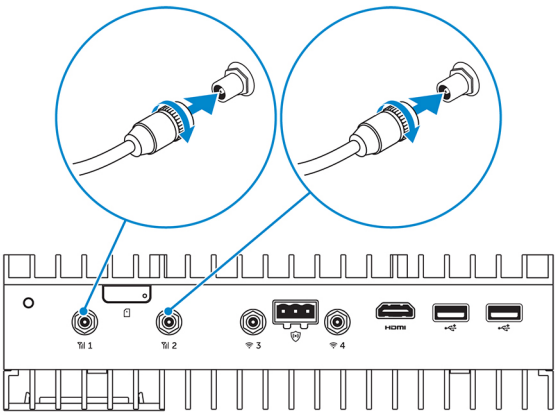

5. Connect a display to the Edge Gateway (if necessary).

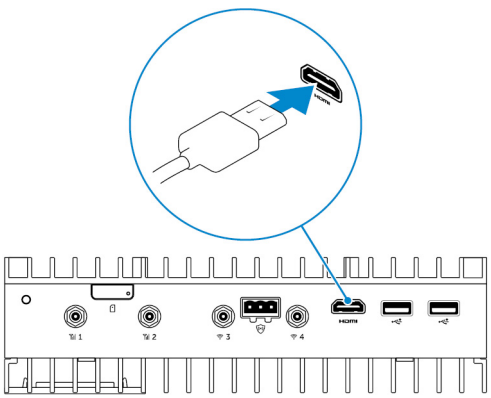

6. Connect a keyboard and mouse if accessing the Edge Gateway directly.

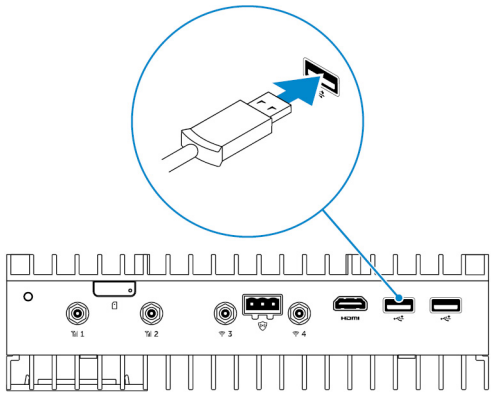

7. Connect a grounding cable to the Edge Gateway (if necessary).
8. Connect a SELV/limited energy circuit power source to the Edge Gateway and press the power button to turn it on.

NOTE: For marine applications, connect an EMI filter such as OnFILTER CleanSweep APN515FG or equivalent between the power source and the Edge Gateway, and then press the power button to turn it on.

24 V AC/DC

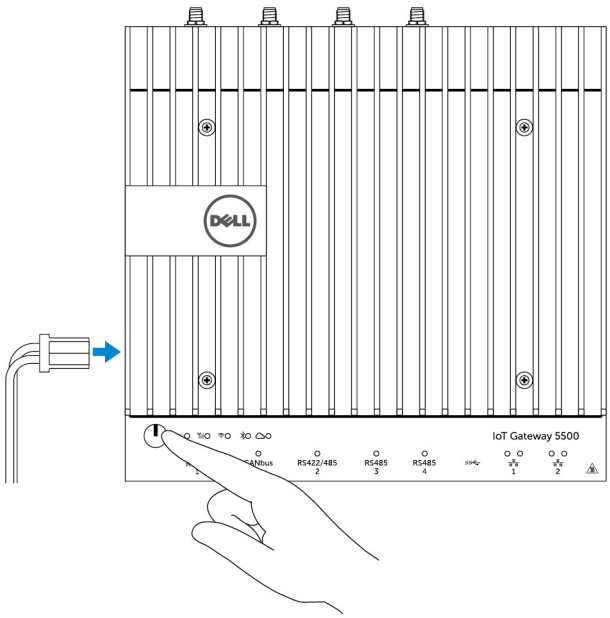

or

19.5 V DC

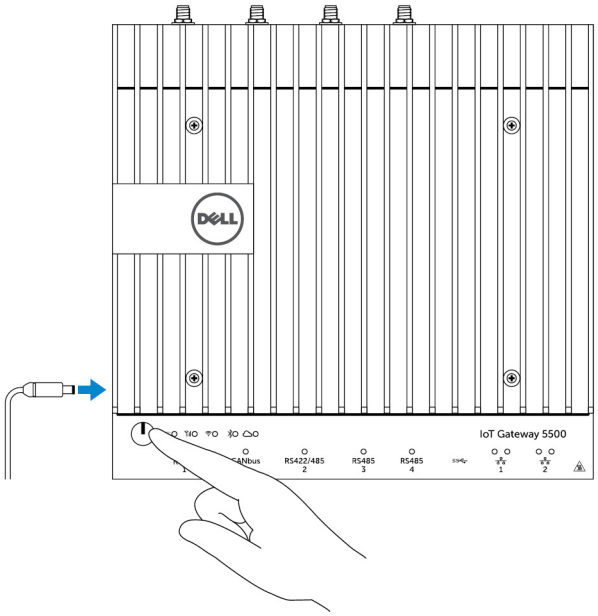

9. If setting up the Edge Gateway for the first time, complete the operating system setup.

   NOTE: The Edge Gateway is shipped with Windows 10 Enterprise, Ubuntu Snappy, or Wind River Linux operating systems.

   NOTE: On Windows 10 OS, select *Do this later* when prompted to enter the product key.

   NOTE: The default username and password for Ubuntu-Snappy-Core is

   - *ubuntu* for Ubuntu Core 15.04
   - *admin* for Ubuntu Core 16

   NOTE: The default username and password for Wind River is *root*.

10. Connect and configure devices using the RS422/RS485 ports.

    NOTE: Turn on the corresponding dip switches to enable the RS422/R485 ports.

    NOTE: After the Edge Gateway setup is complete, reinstall the dust covers on any unused ports.

Mounting the Edge Gateway on the wall

You can mount the Edge Gateway on a wall by using mounting brackets.

1. Secure the two mounting brackets to the back of the Edge Gateway by using four screws.

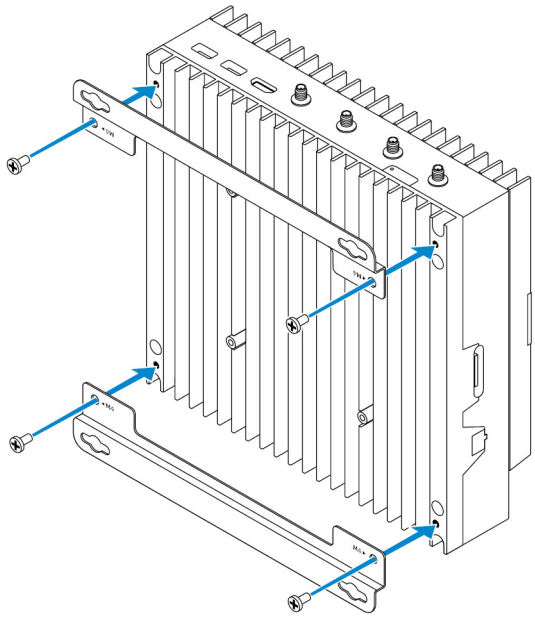

2. Drill four holes in the wall that correspond to the holes in the mounting bracket, then place the Edge Gateway against the wall and align the holes in the mounting brackets with the holes in the wall.

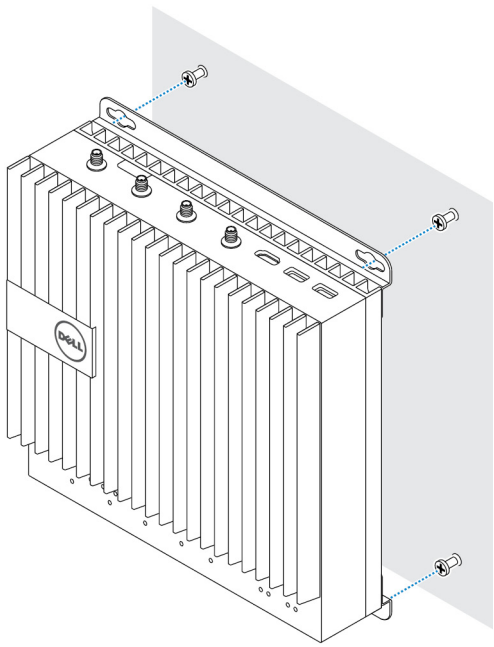

3. Tighten the screws to secure the Edge Gateway to the wall.

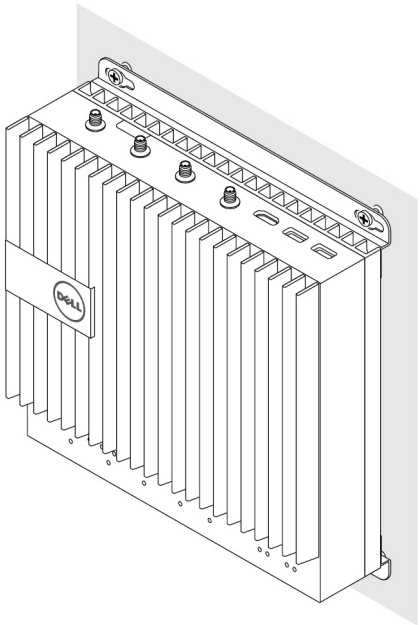

Mounting the Edge Gateway on a DIN rail

The Edge Gateway can be mounted on a DIN rail. The DIN rail bracket mounts to the back of the Edge Gateway.

NOTE: In some environments where the Edge Gateway is installed, a more robust mounting method is required. For example, in marine applications, due to vibrations unique to that environment, only a wall mount should be used.

1. Align the screw holes on the DIN rail mount to the back of the Edge Gateway, place the screws on the DIN rail mount and secure it to the Edge Gateway.

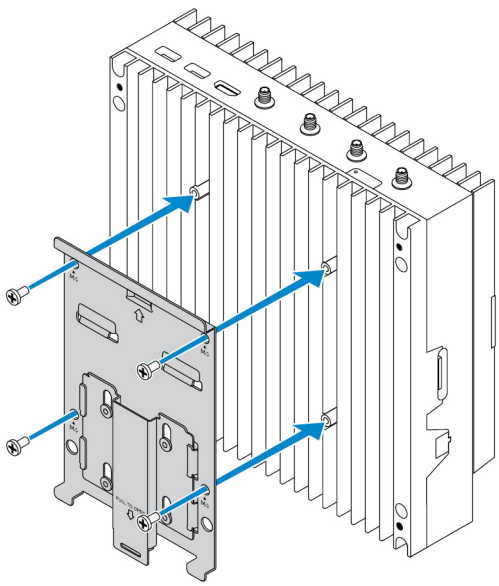

2. Pull down on the tab to release the latch on the DIN rail mount.

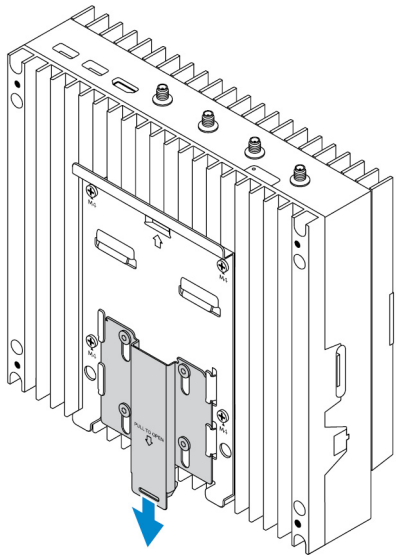

3. Mount the Edge Gateway on a DIN rail.

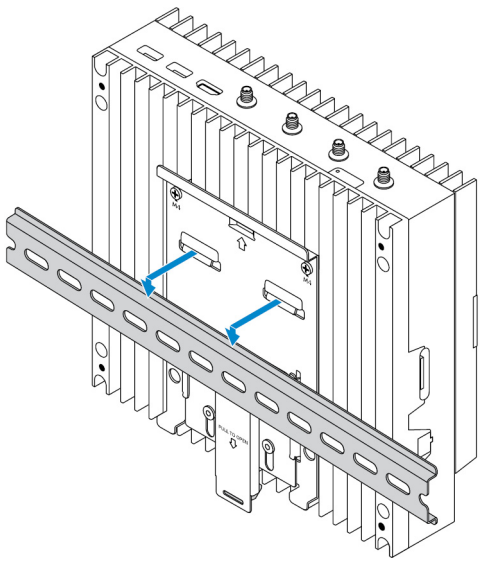

4. Secure the Edge Gateway to the DIN rail by pressing the latch.

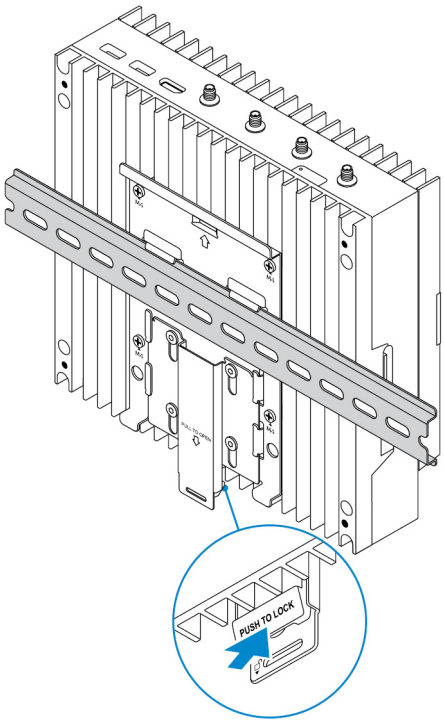

Inserting a micro-SIM card and activating your mobile broadband

CAUTION: Dell recommends that you insert the micro-SIM card before powering on the Edge Gateway.

1. Shut down your Edge Gateway.
2. Locate the micro-SIM card slot.
3. Use a paper clip or SIM eject tool to eject the micro-SIM card tray.
4. Place the micro-SIM card on the tray.

   CAUTION: Ensure that the micro-SIM card is aligned as shown in the image.

5. Close the micro-SIM card tray.

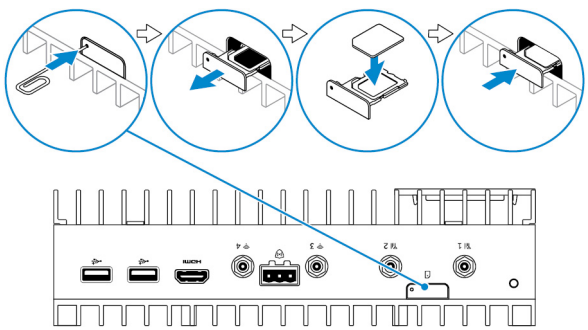

6. Turn on your Edge Gateway.
7. Connect to a mobile network.

   Windows operating system

   If the Edge Gateway is shipped with HSPA+ (DW5580) WWAN card:

   a. Launch the **Telit Mobile Broadband Manager**.

b. Click the play button to connect to your HSPA+ network.

NOTE: Click the information button to view the International Mobile Equipment Identity (IMEI) and Integrated Circuit Card Identifier (ICCID) information.

Click the stop to disconnect from your HSPA+ network.

If the Edge Gateway is shipped with LTE Verizon (DW5812) WWAN or LTE AT&T (DW5813) card:

a. Select the network icon from the taskbar and then click **Cellular**.
b. Select your **Mobile Broadband Carrier** → **Advanced Options**.
c. Make a note of the International Mobile Equipment Identity (IMEI) and the Integrated Circuit Card Identifier (ICCID).

Ubuntu operating system

a. Open the **Terminal** window.
b. Go to super user mode by entering:`$sudo su -`
c. Configure the Mobile Broadband connection profile:

```
#nmcli con add type gsm ifname ttyACM3 con-name <connection name> apn <apn> user
<user name> password <password>
```

d. Connect to the mobile network: `#nmcli con up` *connection name*

NOTE: To view the IMEI and ICCID number use the `mmcli -m 0 --command=+CIMI` command.

To disconnect from the mobile network: `#nmcli con down`*connection name*.

Wind River operating system

If the Edge Gateway is shipped with HSPA+ (DW5580) WWAN card:

a. Open the **Terminal** window.
b. Configure the Mobile Broadband APN profile:

```
#uci set network.wwan.apn="<apn>"
#uci commit network
```

c. Connect to the mobile network: `#ifup wwan`

NOTE: To view the IMEI and ICCID number use the `AT+IMEISV` command.

To disconnect from the mobile network: `#ifdown wwan`.

If the Edge Gateway is shipped with LTE Verizon (DW5812) WWAN card:

Open the **Terminal** window.

a. In the terminal type `AT+IMEISV` to open the Minicom terminal.

   The Minicom terminal opens with the following text:

```
Welcome to minicom 2.7
OPTIONS: I18n
Compiled on Dec 17 2015, 16:20:45.
Port /dev/ttyACM0, 21:33:05
Press CTRL-A Z for help on special keys
```

b. Type the AT+cgdcont command with *PDP Context Identifier*, "*Packet Data Protocol type*", and "*Access Point Name*" parameters and press Enter.

Example: `at+cgdcont=3,"IPV4V6","vzwinternet"`.

NOTE: If the command runs successfully, the message `OK` appears.

c. Configure the Network Control Mode with the `at#ncm` command.

   Example: `at#ncm=1,3`.

d. Activate the Packet Data Protocol with the `at+cgact` command.

   Example: `at+cgact=1,3`.

e. To view the PDP Context Read Dynamic Parameters, that is, *bearer_id*, *apn*, *ip_addr*, *subnet_mask*, *gw_addr*, *DNS_prim_addr*, *DNS_sec_addr*, *P-CSCF_prim_addr*, and *P-CSCF_sec_addr* parameters, run the `at+cgcontrdp` command.

   Example: `at+cgcontrdp=3`

```
+CGCONTRDP: 3,7,"vzwinternet.mnc480.mcc311.gprs","100.106.47.7.255.0.0.0","100.1
06.47.8","198.224.157.135","0.0.0.0","0.0.0.0","0.0.00"
```

f. Exit the Minicom module.

g. In the Linux terminal configure the connection with the following commands

```
root@WR-IntelligentDevice:~# ifconfig wwan0 ip_addr netmask subnet_mask up
root@WR-IntelligentDevice:~# route add default gw gw_addr wwan0
root@WR-IntelligentDevice:~# echo nameserver DNS_prim_addr >>/etc/resolv.conf
```

   Example:

```
root@WR-IntelligentDevice:~# ifconfig wwan0 100.106.47.7 netmask 255.0.0.0 up
root@WR-IntelligentDevice:~# route add default gw 100.106.47.8 wwan0
root@WR-IntelligentDevice:~# echo nameserver 198.224.157.135 >>/etc/resolv.conf
```

h. Log in to the Minicom module using the `minicom -D /dev/ttyACM0` command.

i. Connect to the mobile network using the `at+cgdata` command.

   Example:`at+cgdata="M-RAW_IP",3`

NOTE: To view the IMEI and ICCID number use the `AT+IMEISV` command.

To disconnect from the mobile network

a. Open the Minicom terminal.
b. Enter the `at+cgdata="M-RAW_IP",3` command.
c. Close the Minicom terminal.
d. Enter the `root@WR-IntelligentDevice:~# ifconfig wwan0 down` command.

If the Edge Gateway is shipped with LTE AT&T (DW5813) WWAN card:

a. Open the **Terminal** window.
b. In the terminal type `minicom -D /dev/ttyACM0` to open the Minicom terminal.
   The Minicom terminal opens with the following text:

```
Welcome to minicom 2.7
OPTIONS: I18n
Compiled on Dec 17 2015, 16:20:45.
Port /dev/ttyACM0, 21:33:05
Press CTRL-A Z for help on special keys
```

c. Type the AT+cgdcont command with *PDP Context Identifier*, "*Packet Data Protocol type*", and "*Access Point Name*" parameters and press Enter.

Example: `at+cgdcont=3,"IPV4V6","broadband"`.

NOTE: If the command runs successfully, the message `OK` appears.

d. Configure the Network Control Mode with the `at#ncm` command.

   Example: `at#ncm=1,3`.

e. Activate the Packet Data Protocol with the `at+cgact` command.

   Example: `at+cgact=1,3`.

f. To view the PDP Context Read Dynamic Parameters, that is, *bearer_id*, *apn*, *ip_addr*, *subnet_mask*, *gw_addr*, *DNS_prim_addr*, *DNS_sec_addr*, *P-CSCF_prim_addr*, and *P-CSCF_sec_addr* parameters, run the `at+cgcontrdp` command.

   Example: `at+cgcontrdp=3`

```
+CGCONTRDP: 3,7,"broadband.mnc480.mcc311.gprs","100.106.47.7.255.0.0.0","100.1
06.47.8","198.224.157.135","0.0.0.0","0.0.0.0","0.0.00"
```

g. Exit the Minicom module.

h. In the Linux terminal configure the connection with the following commands

```
root@WR-IntelligentDevice:~# ifconfig wwan0 ip_addr netmask subnet_mask up
root@WR-IntelligentDevice:~# route add default gw gw_addr wwan0
root@WR-IntelligentDevice:~# echo nameserver DNS_prim_addr >>/etc/resolv.conf
```

   Example:

```
root@WR-IntelligentDevice:~# ifconfig wwan0 100.106.47.7 netmask 255.0.0.0 up
root@WR-IntelligentDevice:~# route add default gw 100.106.47.8 wwan0
root@WR-IntelligentDevice:~# echo nameserver 198.224.157.135 >>/etc/resolv.conf
```

i. Log in to the Minicom module using the `minicom -D /dev/ttyACM0` command.

j. Connect to the mobile network using the `at+cgdata` command.

   Example:`at+cgdata="M-RAW_IP",3`

To disconnect from the mobile network

a. Open the Minicom terminal.
b. Enter the `at+cgdata="M-RAW_IP",3` command.
c. Close the Minicom terminal.
d. Enter the `root@WR-IntelligentDevice:~# ifconfig wwan0 down` command.

Replacing the micro-SIM card

CAUTION: Removing the micro-SIM card while it is in use may cause data loss or result in application errors.

1. Using a paper clip or SIM eject tool, eject the micro-SIM card tray.
2. Remove the micro-SIM card from the micro-SIM card tray.
3. Replace the micro-SIM card tray into the Edge Gateway.

4

Setting up your operating system

CAUTION: To prevent operating system corruption from sudden power loss, use the operating system to gracefully shut down the Edge Gateway.

Windows 10 IoT Enterprise LTSB

Overview

The Edge Gateway supports both Windows 10 IoT Enterprise LTSB 2015 and Windows 10 IoT Enterprise LTSB 2016 editions. For more information on Windows 10 operating system, see https://support.microsoft.com/en-us.

Boot up and log in

1. Connect a keyboard, mouse, and monitor to the Edge Gateway.
2. Power on the Edge Gateway.
   The system boots to the Windows 10 IoT Enterprise LTSB operating system.
3. Select your regional settings.

   NOTE: If prompted for a product key, and one is already entered, select Do this later.
4. Read and **Agree** to the End User License Agreement.
5. Connect to an available wireless or wired network.
6. Create a user account.

Restoring Windows 10 IoT Enterprise LTSB

You can restore Windows 10 IoT Enterprise LTSB on the Edge Gateway using the recovery Operating System image on the boot partition which resets the run-time image back to the factory image.

1. Connect a keyboard, mouse, and monitor to the Edge Gateway.
2. Power on the Edge Gateway and boot to the operating system's desktop.
3. Click the Start icon, hold the Shift key and click **Restart**.
4. Select **Troubleshoot** → **Reset this PC**.
5. Select **Reset this PC** → **Remove everything**.
6. Select **Fully clean the drive** → **Reset**.

Windows 10 IoT Enterprise LTSB basic functions

BIOS update

BIOS updates for the Edge Gateway may be downloaded from www.dell.com/support. The download includes an executable that can run from a local machine.

Watchdog Timer

The Watchdog Timer for Windows 10 IoT Enterprise LTSB is controlled from the BIOS setting.

1. Enter the BIOS during boot by pressing F2.
2. Access BIOS setting **Watchdog Timer** to enable or disable The Watchdog Timer.

Cloud LED

NOTE: To utilize the Cloud LED, download the necessary tools and drivers from www.dell.com/support.

One unique feature of the Edge Gateway 5000 Series is the *Cloud LED*. Cloud LED enables you to visually inspect the operational status of the Edge Gateway by looking at the display light on the left panel of the Edge Gateway.

To enable this feature, you must expose and program a GPIO register on the Edge Gateway.

Follow these steps to control the Cloud LED on the Edge Gateway:

1. Download the Cloud LED utility from https://www.dell.com/support/home/us/en/04/drivers/driversdetails?driverid=9mfpj.
2. Extract the following files:
   a. DCSTL64.dll
   b. DCSTL64.sys
   c. CloudLED.exe

   NOTE: These files must be in the same directory.
3. Run **CloudLED.exe** from command prompt or PowerShell with administrative rights. Run the following commands:
   - CloudLED.exe ON
   - CloudLED.exe OFF

TPM support

Windows 10 IoT Enterprise LTSB supports TPM 2.0. For more information on TPM resources, see https://technet.microsoft.com/en-us/library/cc749022(v=ws.10).aspx

System Shut down and Restart

1. Click the Start icon.
2. Click **Power** then select **Restart** or **Shut down**.

LAN/WLAN network configuration

1. Click the Start icon.
2. Type **Settings** and click **Settings**.
3. Select **Network & Internet**.

WWAN network configuration

Follow the Service Manual to install and configure the WWAN module and the corresponding carrier SIM card for the system. After the WWAN module and the SIM cards are installed:

1. Click the Start icon.
2. Type **Settings** and click **Settings**.
3. Select **Network & Internet**
4. Locate the WWAN connection in the Wi-Fi section and select the entry to connect and disconnect from the WWAN adapter.

Bluetooth configuration

1. Click the Start icon.
2. Type **Settings** and click **Settings**.
3. Select **Devices** from the **Settings** menu and, then select **Bluetooth** from the menu on the left panel.

Common port mappings

Serial port mapping

Table 1. Serial port mapping

Number	Port type	Connector	Device node
1	RS232	DB9	COM1
2	RS422/485	5-pin terminal	COM2
3	RS485	3-pin terminal	COM3
4	RS485	3-pin terminal	COM4

Edge Gateway I/O module GPIO mapping

The GPIOs on the external I/O Module for the Edge Gateway are behind the PIC microcontroller. The PIC microcontroller is exposed to the host system and to the host OS as a USB-HID device. Software applications developed to communicate with the GPIOs may use the protocol defined in the above set of references to communicate with the GPIO modules.

Edge Gateway I/O module PCIe expansion mapping

The PCIe slot on the external I/O module for the Edge Gateway is driven directly from the host PCIe bus. Since PCIe expansion is generic, there are no PCIe device-specific drivers integrated into the Windows 10 IoT Enterprise LTSB OS image. If a specific PCIe card is to be used on this slot, contact the vendor of that PCIe card to verify if they have the required drivers for Windows 10 IoT Enterprise LTSB.

Snappy Ubuntu Core 15 and 16

Overview

Ubuntu Snappy Core is a Linux OS distribution that is an entirely new mechanism for managing a system and its applications.

The Edge Gateway supports the following Ubuntu Snappy Linux OS distribution:

- Ubuntu Core 15
- Ubuntu Core 16

For more information on Ubuntu Snappy Core OS, see

- www.ubuntu.com/cloud/snappy
- www.ubuntu.com/desktop/snappy
- www.ubuntu.com/internetofthings

Pre-requisites

Infrastructure

An active connection to the internet is needed to update the Ubuntu Snappy Core operating system as well as applications (snaps)

Prior knowledge

- Familiarity with Unix\Linux commands
- Knowledge of how to use the serial communication protocol
- Knowledge of how to use a terminal emulator (for example; PuTTY)
- Knowledge of your network settings (proxy URL, ports, name servers, and so on)

Boot up and log in

NOTE: The Ubuntu Core operating system has no graphical user interface

Power on the Edge Gateway. When prompted to log in to the OS, enter the default credentials.

NOTE: The default username and password for:

- Ubuntu Core 15.04 is *ubuntu*
- Ubuntu Core 16 is *admin*

For example (Ubuntu 15.04):

```
Ubuntu 15.04 localhost.localdomain tty1

localhost login: ubuntu
Password: ubuntu
```

Press Enter, the following text is displayed:

```
Ubuntu 15.04 localhost.localdomain tty1

localhost login: ubuntu
Password
Last login: Mon Nov 2 16:47:43 UTC 2015 on tty1
Welcome to snappy Ubuntu Core, a transactionally updated Ubuntu

* See http://ubuntu.com/snappy

It's a brave new world her in snappy Ubuntu Core! This machine
does not use apt-get or deb packages. Please see 'snappy -help'
for app installation and transactional updates

(plano)ubuntu@localhost:~$
```

For example (Ubuntu 16):

```
Ubuntu 16 on 127.0.0.1 (tty1)

localhost login: admin
Password: admin
```

Restoring Ubuntu Snappy

When the operating system is restored to the factory image, all data on the system is deleted. You can restore the OS to the factory image using one of the following methods:

- Restoring Ubuntu Core 15.04 from USB flash drive
- Restoring Ubuntu Core 16 from USB flash drive
- Restoring from boot menu

Creating the OS recovery USB flash drive

Prerequisites:

- Service Tag of the Edge Gateway
- .NET Framework 4.5.2 or higher
- A Windows computer with administrator rights and at least 8 GB of available storage space to download the Dell ISO recovery image
- A blank USB flash drive with at least 8 GB of storage space.

CAUTION: The following steps will delete all the data on your USB flash drive.

1. Download and save the Dell ISO recovery image file from:

- For Windows: dell.com/support/home/us/en/19/drivers/osiso/win
- For Ubuntu: dell.com/support/home/us/en/19/drivers/osiso/linux

2. Download and install the **Dell OS Recovery Tool** on your computer.
3. Launch the **Dell OS Recovery Tool**.
4. Click **Yes** in the **User Account Control** prompt.
5. Connect the USB flash drive to the computer.
6. Click **Browse** and navigate to the location where the Dell ISO recovery image file is saved.
7. Select the Dell ISO recovery image file and click **Open**.
8. Click **Start** to begin creating the bootable USB recovery media.
9. Click **Yes** to continue.
10. Click **OK** to complete.

Restoring Ubuntu Core 15.04 from USB flash drive

CAUTION: These steps will delete all the data on your Edge Gateway.

Prerequisites

- Recovery USB flash drive. To create it, see Creating the OS recovery USB flash drive.
- Edge Gateway 5000 series hardware
- LCD monitor
- USB keyboard
- USB mouse

Flashing Ubuntu Core 15.04 OS recovery image

1. Connect power, keyboard, mouse, and monitor to the Edge Gateway.
2. Insert the recovery USB flash drive into the USB port on the Edge Gateway.
3. Power on the Edge Gateway.
4. When the Dell logo appears on the screen, press F12 to enter the one-time boot screen, and the select **USB storage**.
5. On the next screen, select **OS Recovery**.
   Ubuntu Live desktop should appear.
6. Flash the Snappy Ubuntu Core image to the Edge Gateway:
   a. Start the **Terminal** application. It can be found by typing `Terminal` in **Unity Dash**.
   b. Type the following command `ubuntu@ubuntu:~/Desktop$ ./OS_RECOVERY` and press Enter.
7. Reboot the system, and remove the USB flash drive.
   Ubuntu Core 15.04 is now installed on your Edge Gateway.

Restoring Ubuntu Core 16 from USB flash drive

CAUTION: These steps will delete all the data on your Edge Gateway.

Prerequisites

- Recovery USB flash drive. To create it, see Creating the OS recovery USB flash drive.
- Edge Gateway 5000 series hardware
- LCD monitor
- USB keyboard
- USB mouse

Flashing Ubuntu Core 16 OS recovery image

1. Connect power, keyboard, mouse, and monitor to the Edge Gateway.
2. Insert the recovery USB flash drive into the USB port on the Edge Gateway.

3. Power on the Edge Gateway.
4. When the Dell logo appears on the screen, press F12 to enter the one-time boot screen, and the select **USB storage**.

   The Edge Gateway boots through the USB flash drive and flashes the Ubuntu Core 16 installation image into storage automatically.
5. After the installation is complete, the system powers off.

   NOTE: This first phase of installation takes about 3 minutes to complete.
6. Remove the USB drive.
7. Power on the Edge Gateway again to continue the installation. The system reboots several times during this second phase of installation and takes about 10 minutes to complete.

   After installation is complete, a login screen appears.
8. At the login screen, enter the default username and password: `admin`.

   The Edge Gateway is now ready for use.

Restoring from boot menu

You can restore Ubuntu Snappy Core on the Edge Gateway using the recovery OS image on the boot partition. Reset the system to the factory image if you encounter any of the following situations:

- You are unable to start the operating system.
- The operating system is damaged.

Connect a keyboard, mouse, and monitor to the Edge Gateway, or connect to the Edge Gateway through a KVM session.

1. Power on the Edge Gateway.
2. Press F12 when the Dell logo is displayed on the screen to enter the boot menu.
3. Select `Factory Restore` from the boot menu.

   CAUTION: The next step deletes all the data on your system.
4. Press `Y` when prompted `Factory Restore will delete all user data, are you sure? [Y/N]`.

   The system restoration starts and reinstalls the OS on your Edge Gateway.

Updating operating system and applications

After enabling the network connections, and connecting to the internet, it is a recommended to have the latest OS components and applications installed. To update Ubuntu Snappy, run the `(plano)ubuntu@localhost:~$ sudo snappy update` command.

Viewing operating system and application versions

Run the command,

```
(plano)ubuntu@localhost:~$ sudo uname -a
```

Returns

```
Linux ubuntu.localdomain 3.19.0-47-generic #53-Ubuntu SMP Mon Jan 18 14:02:48 UTC 2016
x86_64 x86_64 x86_64 GNU/Linux
```

Run the command,

```
(plano)ubuntu@localhost:~$ sudo snappy info
```

Returns

```
Linux power5000.localdomain 3.19.0-47-generic #53-Ubuntu SMP Mon Jan 18 14:02:48 UTC 2016
x86_64 x86_64 x86_64 GNU/Linux
```

Run the command,

```
(plano)ubuntu@localhost:~$ snappy list -v
```

Returns

```
Name                                    Date                    Version         Developer
ubuntu-core                      2015-10-13       7                    ubuntu
bluez                                        2015-10-20          5.34-2         canonical*
network-namager            2015-10-20          0.2                  canonical*
plano-uefi-fw-tools    2015-10-20        0.5                  canonical*
webdm                                        2015-10-20          0.9.2
canonical*
plano-webdm                          2015-10-20          1.7                  canonical*
```

NOTE: Check if a newer version of the software is available. For more information on checking for updates, see Updating operating system and applications.

Ubuntu Core OS basic functions

Basic Commands

NOTE: For more information about Ubuntu commands, see https://snapcraft.io/.

Table 2. Basic commands

Action	Ubuntu Core 15	Ubuntu Core 16
Viewing system attributes	`#sudo snappy info`	`#sudo snap version`
Updating the image to the latest Release	`#sudo snappy update`	`#sudo snap refresh`
Viewing a list of all the snaps that are currently installed	`#sudo snappy search`	`#sudo snap find`
Viewing a list of service commands that are available	`#sudo snappy service help`	N/A
Viewing a set an attribute to a snap	N/A	`#sudo snap set <snap> <attribute>=<value>`
Querying attributes from a snap	N/A	`#sudo snap get <snap>`

Rebooting the system	`#sudo reboot`	Run the command:
		`admin@localhost:$ sudo reboot`
		returns:
		`System reboot successfully`

Shutting down the system	`#sudo poweroff`	Run the command: `admin@localhost:$ sudo poweroff` The system shuts down successfully.
Add a new user if **libnss-extrausers** is pre-installed	`$sudo adduser --extrausers testuser`	`$sudo adduser --extrausers testuser`
Change a user's password	`$sudo passwd <user-name>`	`$sudo passwd <user-name>`
Disable or remove cloud-init service	`$sudo mount -o remount,rw /` `$sudo /usr/bin/apt-get remove cloud-init`	N/A
Adjust grub configuration	`$sudo mount -o remount,rw /` `$sudo vi /boot/grub/grub.cfg`	N/A

Action	Ubuntu Core 15	Ubuntu Core 16
Re-mount the Ubuntu Snappy 16 root file system as read only	N/A	`Snappy 16 rootfs is Read-Only`
Accessing the built-in help	N/A	`admin@localhost:~$ sudo snap --help`
Listing the installed snaps	N/A	`admin@localhost:~$ sudo snap list`
Updating the system name	N/A	`admin@localhost:$ network-manager.nmcli general hostname <NAME>`
Changing the time zone	N/A	When the system arrives from the factory, the operating system is usually set to the **UTC** time zone. To change the time zone to your location, run the command: `admin@localhost:~$ sudo timedatectl --help` the help file above will tell you commands you need to know.

Root user credential	N/A	Run the command:
		`admin@localhost:$ sudo su -`
		Returns:
		`$ admin@localhost:~# sudo su -`
		`$ root@localhost:~#`

Identifying the System Service Tag	N/A	Run the command: `admin@localhost:$ cat /sys/class/dmi/id/product_serial` The system tag is printed.

Identifying the system vendor	N/A	Run the command:
		`admin@localhost:$ cat /sys/class/dmi/id/board_vendor`
		returns
		`Dell Inc.`
		The system tag is printed.

UEFI capsule update

The `fwupgmgr` tool or commands are used to update the UEFI BIOS on the system. The UEFI BIOS for this platform is released through online Linux Vendor File System (LVFS) based methods

It is recommended that you enable the UEFI Capsule update by default so that it is running in the background to keep the system BIOS up to date.

NOTE: For more information about `fwupd` commands, see www.fwupd.org/users.

Without an internet connection

1. Download the latest .cab file from secure-lvfs.rhcloud.com/lvfs/devicelist.
2. Check the current BIOS details.
   ```
   $ sudo uefi-fw-tools.fwupdmgr get-devices
   ```
3. Copy the **firmware.cab** file to **/root/snap/uefi-fw-tools/common/** folder.
   ```
   $ sudo cp firmware.cab /root/snap/uefi-fw-tools/common/
   ```
4. Check the details of the BIOS from the **.cab** file.
   ```
   $ sudo uefi-fw-tools.fwupdmgr get-details [Full path of firmware.cab]
   ```
5. Apply the update.
   ```
   $ sudo uefi-fw-tools.fwupdmgr install [Full path of firmware.cab] -v
   ```
6. Restart the system.
   ```
   $ sudo reboot
   ```

With an internet connection

1. Connect and login to the Edge Gateway.
2. Check the current BIOS details.
   ```
   $sudo uefi-fw-tools.fwupdmgr get-devices
   ```
3. Check if the update is available from LVFS service.
   ```
   $sudo uefi-fw-tools.fwupdmgr refresh
   ```
4. Download the BIOS from the www.dell.com/support.
   ```
   $sudo uefi-fw-tools.fwupdmgr get-updates
   ```
5. Apply the update.
   ```
   $sudo uefi-fw-tools.fwupdmgr update -v
   ```
6. Restart the system.
   ```
   $ sudo reboot
   ```

Watchdog Timer

NOTE: For more information about Watchdog Timer (WDT) commands, see www.sat.dundee.ac.uk/~psc/watchdog/Linux-Watchdog.html.

It is recommended that you enable the WDT by default to activate the fail-safe circuitry. Snappy, a WDT-compatible operating system provides the capability to detect and recover the system from malfunctions or unexpected crashes.

To check daemon status, run the command:

```
admin@localhost:$ systemctl show | grep -i watchdog
```

Returns:

```
RuntimeWatchdogUSec=1min
ShutdownWatchdogUSec=10min
```

NOTE: The default value is 10. The actual value should be greater than 0.

To configure the timer, run the command:

```
admin@localhost:$ sudo vi /etc/systemd/system.conf.d/watchdog.conf
```

Security

Trusted Platform Module (TPM)

NOTE: For more information about the TPM, see https://developer.ubuntu.com/en/snappy/guides/security-whitepaper/.

TPM is only supported on devices that have TPM hardware installed on products with Snappy-enhanced security support. The TPM on/off setting is configurable in the BIOS and manageable in the operating system.

If TPM is turned off, the device node (`/dev/tpm0`) does not exist.

```
(plano)ubuntu@localhost:~$ ls /dev/tpm0
ls: cannot access /dev/tpm0: No such file or directory
```

If TPM is turned on, the device node (`/dev/tpm0`) exists.

```
(plano)ubuntu@localhost:~$ ls /dev/tpm0
/dev/tpm0
```

Accessing Snappy Store/Snapweb

1. Enter `ip_address:4200` in a browser.

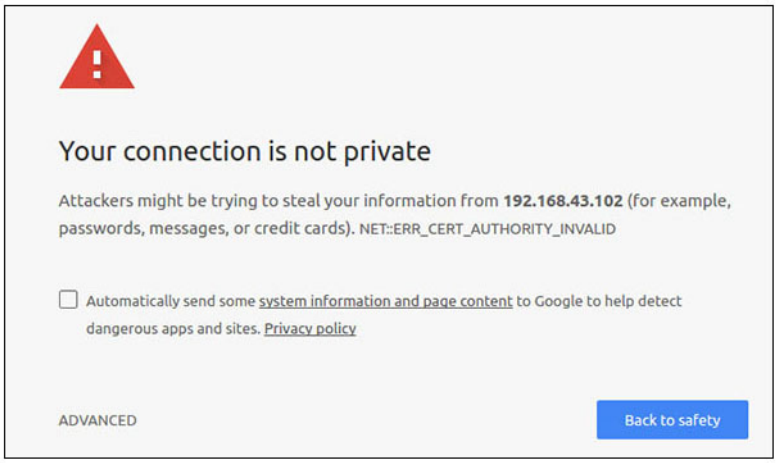

2. Select `Advanced`, then select `proceed to the ip_address(unsafe)`.
3. Using the default login of 'admin', keeping the password blank, open Terminal and ssh remote login

```
lo@lo-latitude-E7470:~$ ssh admin@10.101.46.209
admin@10.101.46.209's password:
```

4. While running `sudo snapweb.generate-token`, copy the token.

```
lo@lo-latitude-E7470:~$ ssh admin@10.101.46.209
admin@10.101.46.209's password:
Welcome to Ubuntu 16.04.1 LTS (GNU/Linux 4.4.0-45-generic x86_64)

 * Documentation: https://help.ubuntu.com
 * Management:    https://landscape.canonical.com
 * Support:       https://ubuntu.com/advantage
Welcome to Snappy Ubuntu Core, a transactionally updated Ubuntu.

* See https://ubuntu.com/snappy

It's a brave new world here in Snappy Ubuntu Core! This machine does not use apt-get or
deb packages. Please see 'snap --hwlp' for app installation and transactional updates.

Last login: Tue Nov 01:10:12 2016 from 10.101.46.187
Admin@localhost:~$ sudo snapweb.generate-toen
Snapweb Access Token:

GtYaoevIodhTgHDyFWczWtYkEhDYROpX0pf27K62TtTOVooUwRuQ)IgBB7ECznCP

Use the above token in the Snapweb interface to be granted access.
admin@localhost:~$
```

5. Paste the token on the web page and click `Submit`.

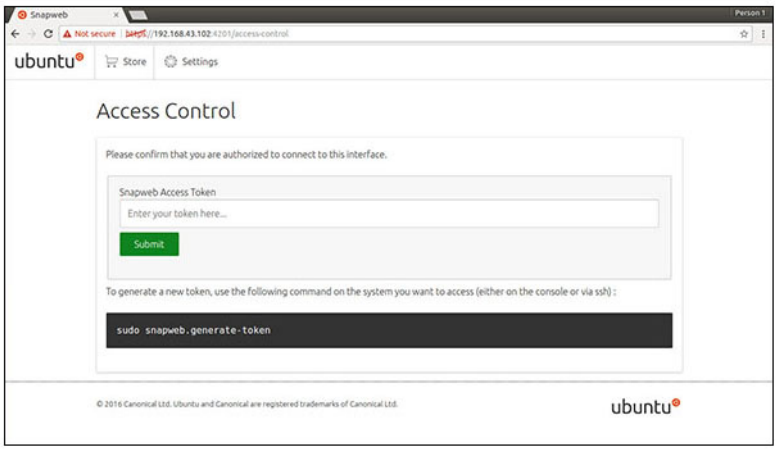

You can now access the snapweb.

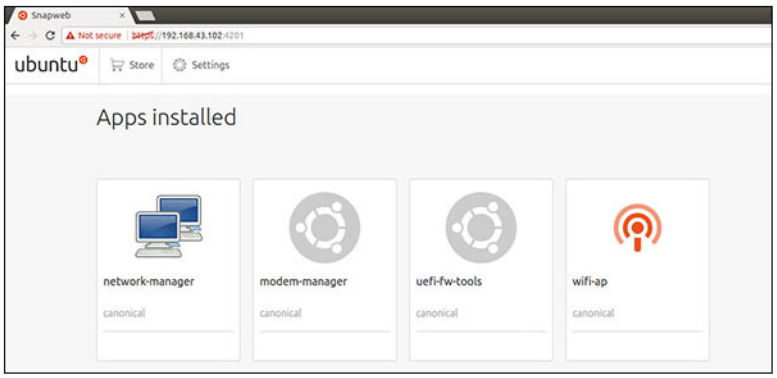

Cloud LED On/Off

Cloud LED enables you to visually inspect the operational status of the Edge Gateway by looking at the display light on the left panel of the Edge Gateway.

1. To export Cloud LED PIN, run the command:

   ```
   #sudo su -
   #echo 346 > /sys/class/gpio/export
   #echo out > /sys/class/gpio/gpio346/direction
   ```

2. To turn on Cloud LED, run the command:

   ```
   #echo 1 > /sys/class/gpio/gpio346/value
   ```

   or

   To turn off Cloud LED, run the command:

   ```
   #echo 0 > /sys/class/gpio/gpio346/value
   ```

Serial Port

Serial device nodes mapping.

Table 3. Serial device nodes mapping table.

Port Type	Connector	Device Node
RS232	DB9	`/dev/ttyS6`
RS422_485	5 pin terminal	`/dev/ttyS4`
RS485	3 pin terminal	`/dev/ttyS5`
RS485	3 pin terminal	`/dev/ttyS2`

Execute the `#sudo chmod 777 /dev/ttyS#` command on two systems, where # is port number corresponding to ports being used.

- On one of the systems, execute the `#cat < /dev/ttyS#` command, this will put system A waiting for transmission.
- On the other system, execute the `#echo "test" > /dev/ttyS#` command, this will let system B send out transmission.

Minicom

Minicom is a terminal emulation program which allows the host machine to communicate with and debug the serial port on headless systems, such as the Edge Gateway. The following steps help you to setup Minicom.

1. Install Minicom.
```
$ sudo snap install classic --devmode --beta
$ sudo classic.create
$ sudo classic
$ (classic) sudo apt-get update
$ (classic) sudo apt-get install minicom
```
2. Set Minicom.
```
$ sudo minicom -s
```
3. Select **Serial port setup**.
4. Press A to edit the Serial Device to **ttyUSB0**. This can be any other value if there is more than one USB serial cable attached. Then, press Enter to exit:
```
A - Serial Device : /dev/ttyUSB0
```
5. Press F to disable **Hardware Flow Control** to **No**.
6. Press E to edit Baud rate/Parity/Bits.
7. Press E to configure Baud rate as `115200`.

   a. Press Q to configure Stopbits as `8-N-1`. Press Enter to exit.
   Table 4. Comm parameters

```
+---------[Comm Parameters]---------+

|   Current: 115200 8N1

|   Speed                   Parity                  Data              |
|   A: <next>               L: None                 S: 5
                                                                       |
|   B: <prev>               M: Even                 T: 6
                                                                       |
|   C: 9600                 N: Odd                  U: 7
                                                                       |
|   D: 38400                O: Mark                 V: 8

    E: 115200               P: Space

|                                                                      |
|   Stopbits                                                           |
```

```
|   W: 1                    Q: 8-N-1                                |
|   X: 2                    R: 7-E-1                                |
|                                                                   |
|   Choice, or <Enter> to exit?_                                    |
```

8. Press Enter to complete the settings.
9. Select **Save setup as dfl**.
10. Select **Exit from minicom**.

Start Minicom as a terminal program

```
$ sudo minicom
```

```
Welcome to minicom 2.7

OPTIONS: T18n
Compiled on Feb 7 2017, 13:37:27.
Port /dev/ttylUSB0, 15:06:26

Press CTRL-A Z for help on special keys
```

Exit Minicom

1. In terminal mode, press Ctrl+A.
   A message bar is displayed at the bottom of the terminal window.
2. Press X to exit.

Expansion IO Module

PCIe

The PCIe slot on the external IO Module for the Edge Gateway is driven directly from the host PCIe bus. Since it is generic PCIe expansion, there are no PCIe device-specific drivers integrated into the OS image. If there is specific PCIe card used on this slot, contact the Vendor of that PCIe card for drivers.

GPIO

The GPIOs on the external IO Module for the Edge Gateway are behind PIC microcontroller. The PIC microcontroller is exposed to the host system and to the host OS as a USB-HID device. Software application developed to communicate with the GPIOs may use the protocol defined in following set of references to communicate with the GPIO modules. There is no native application software available on the factory OS image that communicates with the IO Module GPIOs.

Zigbee

The Edge Gateway supports a USB Zigbee dongle (purchased from Dell) as an optional add-on hardware. When the Zigbee dongle is present on the system, it is enumerated to the OS as a USB device. There is no native application software to perform Zigbee protocol for this device. For more information about setting up the Zigbee dongle, see Setting up the Zigbee dongle.

Controller Area Network

NOTE: This feature is only supported if hardware module presented.

The OS provides the capability of mutual communication between user space application and physical module. If there is a specific Controller Area Network (CAN) bus programming requirement of user mode application, contact the hardware provider of that module for API documentation.

To find the device bus iver dmesg (if hardware is presented):

- `#dmesg | grep -i microchip`

- `for i in /sys/class/hidraw/*; do udevadm info $i --attribute-walk | grep -q 'CANBus HID Device' && echo path: /dev/$(basename $i); done`

Network Manager – Ubuntu Core 15

Network-Manager is a native Ubuntu Snappy Connection Manger, the application handles multiple network devices, provides detection and configuration for system to automatically connect to network.

A command line utility **nmcli** is included with Network-Manager to support non-graphical user interface.

WWAN (nmcli example)

- Configure the Mobile Broadband connection profile — `#nmcli con add type gsm ifname ttyACM3 con-name <connection name> apn <apn> user <user name> password <password>`
- Connect to the mobile network — `#nmcli con up <connection name>`

WLAN (nmcli example)

- Configure the system to connect to unencrypted Wi–Fi network —

```
#nmcli dev wifi connect $SSID ifname $WIFI_INTERFACE
#iw dev $WIFI_INTERFACE link
#nmcli dev disconnect $WIFI_INTERFACE
```

- Configure the system to connect to WPA-encrypted Wi–Fi network —

```
#nmcli dev wifi connect $SSID password $PSK ifname $WIFI_INTERFACE
#iw dev $WIFI_INTERFACE link
#nmcli dev disconnect $WIFI_INTERFACE
```

Software enabled Access Point (SoftAP)

This feature depends on the wireless module and it's associated driver to act as a wireless access point.

1. Log in to Ubuntu Snappy, make sure the system is connected to internet.
2. Run the `#sudo snappy search softap` command to find the application from the Ubuntu Snappy Store.
3. Run the `#sudo snappy install sw-access-point` command to install the application.

   After the snap is installed, the service should be running as default configuration below:

```
SSID: Ubuntu
Open-authentication
802.11n 2.4GHz (G mode)
IP Address: 10.0.60.1
DHCP Range: 10.0.60.3-20
DNS server: 10.0.60.1
Gateway: 10.0.60.1
```

Bluetooth

To connect to a Bluetooth device like a Bluetooth keyboard:

1. Run the `#bluetoothctl -a` command to start **bluetoothctl** console.

   The bluetoothctl console is opened.
2. Run the `$power on` command to power on the Bluetooth device.
3. Register the agent for keyboard:

```
$agent KeyboardOnly
$default-agent
```

4. Run the `$pairable on` command to put the Bluetooth controller in pair-able mode.
5. Run the `$scan on` command to scan nearby Bluetooth device.
6. Run the `$scan off` command to stop scanning after Bluetooth keyboard is found.
7. Run the `$pair <MAC address of bluetooth keyboard>` command to pair the Bluetooth keyboard.
8. Enter PIN Code on Bluetooth keyboard if needed.

9. Run the `$trust <MAC address of bluetooth keyboard>` command to turst the Bluetooth keyboard.
10. Run the `$connect <MAC address of bluetooth keyboard>` command to connect the to the Bluetooth keyboard.
11. Run the `$quit` command to quit the **bluetoothctl** console.

Network Manager – Ubuntu Core 16

Network-Manager is a native Ubuntu Snappy Connection Manager, the application handles multiple network devices, provides detection and configuration for the system to automatically connect to the network.

A command line utility **nmcli** is included with Network-Manager to support non-graphical user interface.

NOTE: For more information about Network-Manager, see https://wiki.archlinux.org/index.php/NetworkManager

Connecting through WWAN

NOTE: For more information on configuring and connecting through WWAN, see https://docs.ubuntu.com/core/en/stacks/network/network-manager/docs/configure-cellular-connections.

1. Check if a modem is present and identify the modem index number.
```
$ sudo modem-manager.mmcli -L
```
2. Check the modem status and identify the primary port.
```
$ sudo modem-manager.mmcli -m <x>
```

   NOTE: *<x>* refers to the modem index number. Replace *<x>* with the actual modem index after running the command at step 1.

3. Create a profile.
```
$ sudo network-manager.nmcli c add con-name test type gsm ifname <primary port> apn internet
```

   NOTE: Depending on the return results from step 2, replace *<primary port >* after `ifname` with the actual primary port name.

4. Check the WWAN status.
```
$ network-manager.nmcli r wwan
```
5. Turn on WWAN.
```
$ sudo network-manager.nmcli r wwan on
```
6. Find `wwan0` in the interface list.
```
$ ifconfig -a
```
7. Enable the connection profile.
```
$ sudo network-manager.nmcli c up test
```
8. Check the **Network Manager** status.
```
$ network-manager.nmcli d
```
9. Disable the connection profile.
```
$ sudo network-manager.nmcli c down test
```
10. Check the **Network Manager** status.
```
$ network-manager.nmcli d
```

Connecting through WLAN

1. Run the command to show a list of network interfaces like **eth0**, **eth1**, **wlan0**, **mlan0**, and so on:
```
$ network-manager.nmcli d
```
2. Run the command to show a list of network interfaces like **eth0**, **eth1**, **wlan0**, **mlan0**, and so on:
```
$ network-manager.nmcli d
```
3. Run the command to show a list of available wireless access points.
```
$ network-manager.nmcli device wifi list
```
4. Wireless connection with `nmcli`: Run the following commands and replace `$SSID`, `$PSK`, and `$WIFI_INTERFACE` of your environment.

- Connect:

```
$ sudo network-manager.nmcli dev wifi connect $SSID password $PSK ifname
$WIFI_INTERFACE
```

- Disconnect:

```
$ sudo network-manager.nmcli dev disconnect $WIFI_INTERFACE
```

Connecting through Software-enabled Access Point (SoftAP)

This feature depends on the wireless module and its associated driver to function as a wireless access point.

NOTE: For more information on SoftAP, see https://docs.ubuntu.com/core/en/stacks/network/wifi-ap/docs/index.

1. Login to Ubuntu Snappy. Make sure that the system is connected to the internet.
2. Run the command to find the application from the Ubuntu Snappy Store.

   ```
   #sudo snap find wifi-ap
   ```

3. Run the command to install the application.

   ```
   #sudo snap install wifi-ap
   ```

4. After snap is installed, run the command to set the network interface used to operate the access point on.

   ```
   $ sudo wifi-ap.config set wifi.interface mlan0
   ```

5. Run the command to enable the access point and restart the service.

   ```
   $ wifi-ap.config set disabled=false
   ```

   WiFi-AP default SSID **Ubuntu** is now visible to clients.

Bluetooth

To connect to a Bluetooth device like a Bluetooth keyboard:

1. Run the command to start **bluetoothctl** console.

   ```
   #bluetoothctl -a
   ```

   The **bluetoothctl** console is opened.

2. Run the command to power on the Bluetooth device.

   ```
   $power on
   ```

3. Register the agent for the keyboard:

   ```
   $agent KeyboardOnly
   $default-agent
   ```

4. Run the command to put the Bluetooth controller in pair-able mode.

   ```
   $pairable on
   ```

5. Run the command to scan nearby Bluetooth device.

   ```
   $scan on
   ```

6. Run the command to stop scanning after the Bluetooth keyboard is found.

   ```
   $scan off
   ```

7. Run the command to pair the Bluetooth keyboard.

   ```
   $pair <MAC address of Bluetooth keyboard>
   ```

8. Enter the PIN code on the Bluetooth keyboard, if needed.
9. Run the command to trust the Bluetooth keyboard.

   ```
   $trust <MAC address of Bluetooth keyboard>
   ```

10. Run the command to connect the to the Bluetooth keyboard.

    ```
    $connect <MAC address of Bluetooth keyboard>
    ```

11. To quit the **bluetoothctl** console.

    ```
    $quit
    ```

Flashing the BIOS

Prerequisites

- Download the latest BIOS file from www.dell.com/support.
- USB 2.0 or USB 3.0 flash drive (4 GB minimum)
- Power off the Edge Gateway.

1. On a separate computer, unzip the BIOS update file that you have downloaded from www.dell.com.
2. Open the extracted file folder **Edge_Gateway5000_1.X.X**.
3. Copy the BIOS update file labeled as **Edge_Gateway5000_1.X.X.exe** to a USB flash drive.
4. Insert the USB flash drive in one of the available USB ports on the Edge Gateway.
5. Power on the Edge Gateway.
6. When the Dell logo is displayed on the screen, press F12 to enter the one-time boot screen.
7. On the one-time boot screen, select **Flash the BIOS** .
8. On the next screen, select the BIOS file (**Edge_Gateway5000_1.X.X.exe**) on the USB key.
9. Start the flash process.

Wind River Linux

Overview

The Edge Gateway is shipped with Wind River Linux IDP-XT version 3.1. For more information on Wind River operating system, see www.windriver.com/support.

For generic details and references on running Wind River Linux IDP 3.1 on a Edge Gateway product, see www.intel.com/gatewaytraining.

Boot up and login

Before configuring the Wind River OS, connect a keyboard, mouse, and monitor to the Edge Gateway, or connect to the Edge Gateway through a KVM session, Dell Wyse Cloud Client Manager (CCM), or Dell Command | Monitor (DCM).

NOTE: For more information about using the CCM, see the CCM documentation available at www.cloudclientmanager.com.

NOTE: For more information about using the DCM, see the DCM documentation available at www.dell.com/clientsystemsmanagement.

Power On the Edge Gateway to boot into Wind River Linux OS. The Wind River Linux does not have a graphical user interface (GUI).

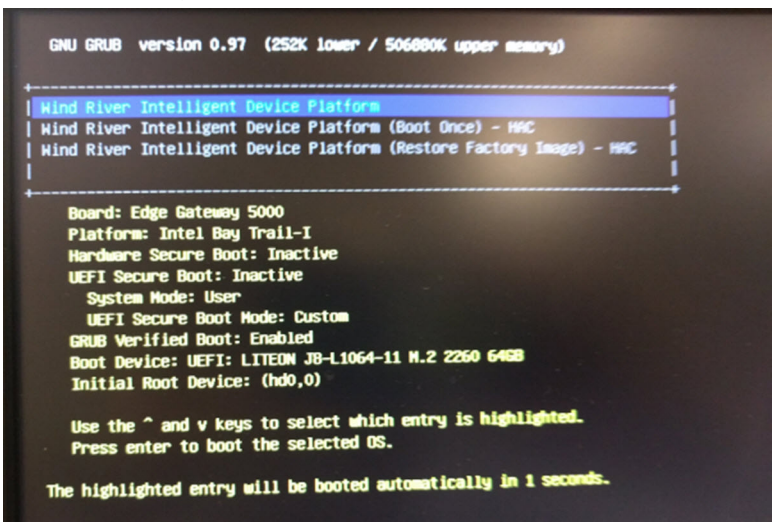

Log into the OS on the terminal with the following default credentials.

- root@WR-IDP-xxxx login: `root` (where xxxx is the version of the Wind River Linux)
- Password: `root`

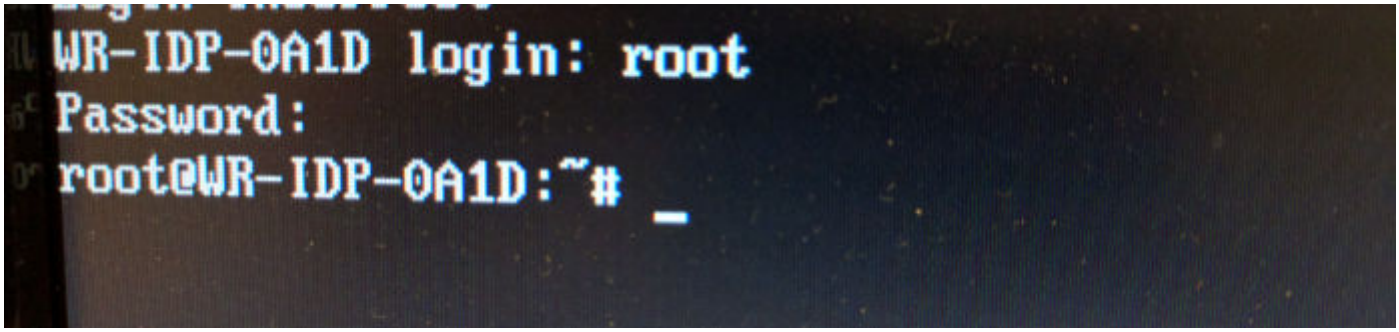

Restoring Wind River Linux

CAUTION: Following these steps deletes all the data on your system.

You can restore Wind River Linux on the Edge Gateway using the recovery OS image on the boot partition which resets the run-time image back to the factory image if you encounter any of the following situations:

- You are unable to start Wind River Linux
- The Wind River Linux operating system is damaged.

Connect a keyboard, mouse, and monitor to the Edge Gateway, or connect to the Edge Gateway through a KVM session, Dell Wyse Cloud Client Manager (CCM), or Dell Command | Monitor (DCM).

1. Boot to the OS menu
2. Choose the `Wind River Intelligent Device Platform (Restore Factory Image)` option and press Enter.

This restores the run-time image back to factory OS image state.

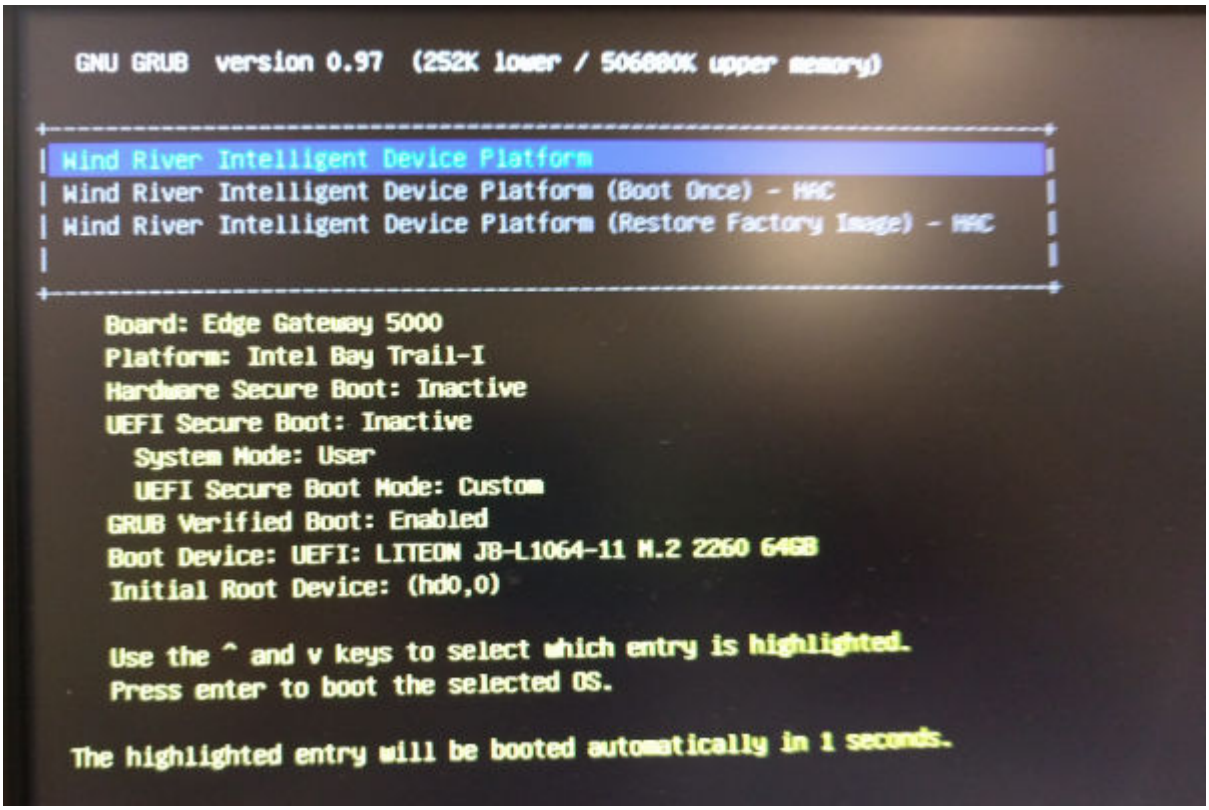

Wind River Linux Basic Functions

Preinstalled Packages

Run the `root@WR-IDP-xxxx:~# rpm -qa` command to list all the packages installed on the Wind River Linux OS.

NOTE: If you are looking for a specific package, you have to pipe the output of the `root@WR-IDP-xxxx:~# rpm -qa` command to search for that specific package.

Expected result: Device: *xxxx-xxxxxxxx-xxxx-xxxx-xxxx-xxxxxxxxxxxx-xxxx*

UEFI Capsule update capability

Run the `fwupgmgr` tool/commands are used to update UEFI BIOS firmware on the system. The UEFI BIOS for this system is released through online **Linux Vendor File System** based methods.

Operation command: `root@WR-IDP-xxxx:~# fwupdmgr get-devices`

Expected result: (Device found) `Device: xxxx-xxxxxxxx-xxxx-xxxx-xxxx-xxxxxxxxxxxx-xxxx`

Watchdog Timer

Running the `root@WR-IDP-xxxx:~# systemctl status watchdog` command displays the status of **Watchdog** timer service.

Expected result: Example of the output is shown below.

```
root@WR-IDP-B425:~# systemctl status watchdog
â watchdog.service - Software watchdog daemon
   Loaded: loaded (/lib/systemd/system/watchdog.service; enabled)
   Active: active (running) since Fri 2016-10-14 15:27:51 UTC; 3 days ago
  Process: 853 ExecStart=/usr/sbin/watchdog (code=exited, status=0/SUCCESS)
 Main PID: 860 (watchdog)
   CGroup: /system.slice/watchdog.service
           ââ860 /usr/sbin/watchdog

Warning: Journal has been rotated since unit was started. Log output is incomplete or unavailable.
root@WR-IDP-B425:~#
```

TPM support (HW TPM module dependency)

Run the `root@WR-IDP-xxxx:~# tpm_statistic` command displays the status of TPM service.

If the TPM is functional and enabled in the BIOS, below would be the expected results, when `tpm_statistic` command is executed.

Expected result: The expected result is for TPM Chip Presence: Normal. Example of the response to the above command should be similar to the output shown below.

```
root@WR-IDP-B425:~# tpm_statistic
TPM Statistic - Version 1.0

checking for awk ...          /usr/bin/awk
checking for cat ...          /bin/cat
checking for tpm_sanitycheck ... /usr/bin/tpm_sanitycheck

TPM Chip Presence:  Normal
Owned Status:       Owned
Cleared Status:     Not Cleared
Active Status:      Actived
Enabled Status:     Enabled

Manufacturer:       0x57454300
TCG version:        1.2
Firmware version:   5.81

Major Dev No:       10
Minor Dev No:       224
Device Node Name:   /dev/tpm0

root@WR-IDP-B425:~#
```

System reboot

To reboot the system, as a root user logged in to the system, enter the `root@WR-IDP-xxxx:~# reboot` reboot at the command prompt.

Expected result: System reboots back to the login prompt successfully.

System PowerOff

Run the `root@WR-IDP-xxxx:~# shutdown now` command to shuts down the system.

Expected result: System shuts down successfully.

Network Interface

To determine the default supported network interface, type the `root@WR-IDP-xxxx:~# ifconfig` at the command prompt.

Expected result: The following are the default network interfaces supported out of the box.

- `br-lan`
- `eth0`
- `eth1`

- `lo`
- `wlan0`

Network configuration and default setup

The following commands can be used to configure different network interfaces on the system with Wind River Linux on it.

Network configuration on **Wind River Linux IDP 3.1** environment can be performed through the **LuCi** web interface.

NOTE: The LuCi web interface supported in the default OS image.

The user can reach the LuCi web interface on the system using the ***https://< IP-Address-of-eth0-interface-of-the-gateway >*** following URL from a different system with a web browser and the system should be on the same network or connected to the system's network through proxy.

The default login credentials to the LuCi web interface are `root/root`. The IP address of the **eth0** network port can be identified by performing the `ifconfig`command on the Linux terminal.

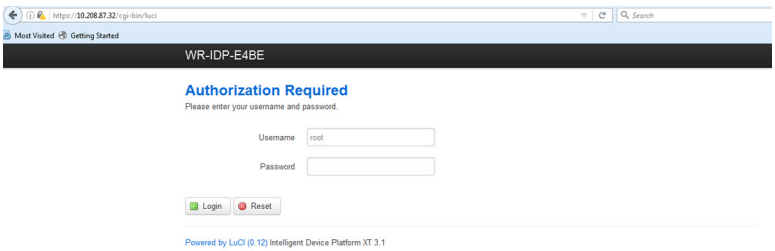

Network interface configuration

The Edge Gateway contains the following default network configurations:

- **br-lan** — Bridged LAN Interface
- **eth0** — Wired LAN interface 0
- **eth1** — Wired LAN Interface 1
- **lo** — Loop back interface
- **wlan0** — Wireless LAN (or Wi-Fi) interface mode

eth0 — Wired LAN Interface. By default **eth0** interface is configured to be DHCP client interface. When this ethernet port is connected to a DHCP server, this interface obtains an IP address from the DHCP server.

Run the `root@WR-IDP-xxxx:~# ifconfig eth0` command to identify the IP address. The network IP interface information is available under `inet addr: x.x.x.x` where x.x.x.x is the IP address of the system.

eth1 — Wired LAN interface. The default configuration for the second wired ethernet interface **eth1** serves as DHCP server and provides IP addresses to any device requesting IP address from the system. The devices requesting DHCP addresses get IP addresses in the range of `192.168.1.x` subnet. The default DHCP server is at `192.168.1.1` address. For reconfiguring this network interface by logging in to the **LuCi** web interface.

Wlan0 — Wireless LAN or Wi-Fi interface. The default configuration for the **WLAN0** interface on the system with Wind River Linux is in access point (AP) mode. The mode can be changed to client mode through **LuCi** web interface.

Br-lan — The bridged LAN interface. By default, the bridge interface is configured to bridge ethernet **eth1** and the **WLAN0** interface, so any devices that would like to connect to the system in WiFi mode or through **eth1** wired mode can obtain IP addresses

through the system. The issued IP addresses by the access point and **eth1** interface are in the `192.168.1.x` subnet. The default access point SSID for the access point is **IDPDK-5591**. The bridge configuration can be modified using LuCi web interface. Follow Intel/Wind River's documentation for more details on configuring, WAN, WLAN, and br-LAN network interfaces using LuCi web interface.

Bluetooth configuration

The system supports an integrated Bluetooth network interface. The Bluetooth network can be configured using LuCI web interface on the Wind River Linux OS. To configure Bluetooth interface on the system with Wind River Linux OS.

1. Log in to the LuCI web interface as identified in the steps referenced in the previous sections.
2. Bluetooth configuration is supported under **Network** tab drop-down menu **Bluetooth** of the Web Interface.

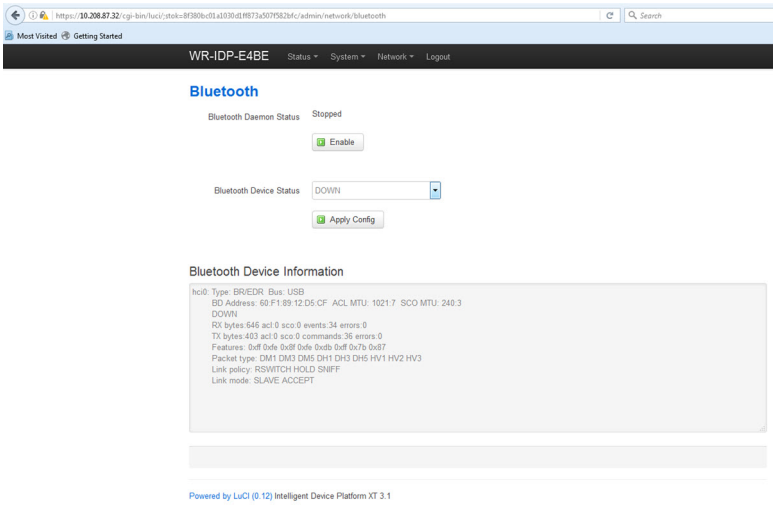

- Enable **Bluetooth** interface in this page and hit **Scan** to identify nearby other Bluetooth enabled devices.

Wireless WAN network interface configuration

Add-on modules can be installed on the Edge Gateway system to get Wireless WAN (WWAN) connectivity.

- 4G-LTE — Interface using Telit LE910 module for carrier AT&T
- 4G-LTE — Interface using Telit LE910 module for carrier Verizon
- HSPA+ — Interface using Telit HE910 module

LE910 WWAN connection configuration

Follow the *Service Manual* to install the LE910 module and the corresponding carrier SIM card in the system. After the module and SIM card is installed, activate the WWAN connectivity by:

NOTE: The default Wind River Linux OS image currently uses AT commands to configure WWAN interface and LTE connectivity.

NOTE: LuCi web interface currently does not support configuring the WWAN interface.

Identifying installed WWAN module and Carrier

To identify the serial interface on the installed LE910 module's tty ACM interface, using dmesg command: `# dmesg | grep -i ttyacm`

The system may contain more than one USB ACM device other than *Telit LE910* or *Telit HE910* module. Based on the output for the **dmesg command**, identify the **ttyacm ports** that were enumerated, for example, below is the output for `dmesg | grep -i ttypacm` command for more than one USB ACM device on the system.

```
root@WR-IDP-0A1D:~# dmesg | grep -i ttyacm
[    1.471995] cdc_acm 1-2:1.0: ttyACM0: USB ACM device
[    2.597928] cdc_acm 1-4.1:1.0: ttyACM1: USB ACM device
[    2.608176] cdc_acm 1-4.1:1.2: ttyACM2: USB ACM device
[    2.622803] cdc_acm 1-4.1:1.4: ttyACM3: USB ACM device
[    2.643657] cdc_acm 1-4.1:1.6: ttyACM4: USB ACM device
[    2.656324] cdc_acm 1-4.1:1.8: ttyACM5: USB ACM device
[    2.660387] cdc_acm 1-4.1:1.10: ttyACM6: USB ACM device
```

Launch **minicom** terminal utility on the system with one of the USB ACM device port to identify that we have the correct USB ACM device for Telit LE910 device before configuring the device, e.g. below shows how to launch **minicom** with `ttyACM1` as interface:

- `# minicom -D /dev/ttyACM1`
- Inside **minicom**, type the following AT command to identify if it is the "Telit" device `AT+GMI`
- If the response to the above command is Telit, then you have identified the correct device ttyacm port.
- If the output is not Telit or Error, then you have to exit out of **minicom** and start **minicom** with a different port like e.g. `/dev/ttyACM0 or /dev/ttyACM3` etc,
- Example of starting **minicom** with `/dev/ttyACM1` as port of communication below.

  `root@WR-IDP-0A1D:~# root@WR-IDP-0A1D:~# minicom -D /dev/ttyACM1`

Configuring the WWAN carrier parameters

Inside **minicom** terminal, the following AT commands have to be issued in sequence to configure the LTE module, the line with **DESCRIPTION** are references to the AT commands to type and are not to be entered as a part of the AT commands themselves

DESCRIPTION: Check that the SIM is inserted and PIN is unlocked using the `at+cpin?` command

DESCRIPTION: If the SIM is locked with a PIN the `at+cpin="1234"` AT command can be used to unlock the SIM. Where the SIM PIN is 1234, if the PIN is different, use appropriate PIN number in the command below.

DESCRIPTION : Setting up the APN. NCM can be activated using every available CID,

NOTE: Skip this step for Verizon as it is preprogrammed (use `AT+CGDCONT?` to identify if the CID3 is vzwinternet).

The `at+cgdcont=3,"IP","broadband"` command has to be issued for AT&T based SIM. In the command, `3` is the CID(Connection ID), this can be between 1 to 5, 3 is shown to keep the value consistent between VZ and ATT based solution. `IP` in the command indicates the TCP-IP protocol. `broadband` in the command is the name assigned by AT&T as a network ID or APN to connect to logically, this name is assigned by the carrier.

DESCRIPTION : Check the state of the modem

```
at+cops?
at+cgatt?
```

DESCRIPTION: Run the `at#ncm=1,3` command to enable NCM on CID 3 (this command must be sent on a USB instance (in this case USB0 or USB3)

DESCRIPTION: Run the `at#ncm=1,3` to activete the PDP context.

DESCRIPTION: Read IP address, Gateway address and DNS address from the module

```
at+cgcontrdp=3
REPONSE:
+CGCONTRDP:
3,6,"vzwinternet.mnc480.mcc311.gprs","100.176.244.64.255.255.255.0","100.176.244.65","10.133
.17.210","0.0.0.0","0.0.0.0","0.0.0.0"
OK
```

Establishing LTE WWAN connectivity

Description: The following are a capture from a sample session that was performed on a Edge Gateway platform with default Wind River Linux OS image to establish LTE connectivity using Verizon LE910 module and Verizon SIM card. The commands highlighted were typed and the other is response from the system. For AT&T LE910 module and AT&T SIM environment use "*broadband*" to replace "*vzwinternet*" in the following set of commands.

In order to open up additional Linux terminal in Wind River Linux, press Alt-F2 key, this will take you to another Linux login prompt. Login using your root/root credentials.

Command typing is highlighted in *Itlaics*

```
root@WR-IntelligentDevice:~# minicom -D /dev/ttyACM0
Welcome to minicom 2.7
OPTIONS: I18n
Compiled on  16:20:45.
Port /dev/ttyACM0, 21:33:05
Press CTRL-A Z for help on special keys
at+cgdcont=3,"IPV4V6","vzwinternet"
OK
at+cgdcont?
+CGDCONT: 1,"IPV4V6","vzwims","",0,0
+CGDCONT: 2,"IPV4V6","vzwadmin","",0,0
+CGDCONT: 3,"IPV4V6","vzwinternet","",0,0

OK
at#ncm=1,3
OK
at+cgact=1,3
OK
at+cgcontrdp=3
+CGCONTRDP: 3,7,"vzwinternet.mnc480.mcc311.gprs","100.106.47.7.255.0.0.0","100.1
06.47.8","198.224.157.135","0.0.0.0","0.0.0.0","0.0.0.0"
+CGCONTRDP: 3,7,"vzwinternet.mnc480.mcc311.gprs","254.128.0.0.0.0.0.0.0.0.0.71.4
6.110.1.1.255.255.255.255.255.255.255.255.0.0.0.0.0.0.0.0","0.0.0.0.0.0.0.0.0.0.
0.0.0.0.0.0","198.224.157.135","0.0.0.0.0.0.0.0.0.0.0.0.0.0.0.0","0.0.0.0.0.0.0.
0.0.0.0.0.0.0.0.0","0.0.0.0.0.0.0.0.0.0.0.0.0.0.0.0"

OK
^A X Y

root@WR-IntelligentDevice:~# ifconfig wwan0 100.106.47.7 netmask 255.0.0.0 up
root@WR-IntelligentDevice:~# route add default gw 100.106.47.8 wwan0
root@WR-IntelligentDevice:~# echo nameserver 198.224.157.135 >>/etc/resolv.conf
root@WR-IntelligentDevice:~# minicom -D /dev/ttyACM0
Welcome to minicom 2.7
OPTIONS: I18n
Compiled on Dec 17 2015, 16:20:45.
Port /dev/ttyACM0, 21:33:05
Press CTRL-A Z for help on special keys
at+cgdata="M-RAW_IP",3
CONNECT
OK
^A X Y
root@WR-IntelligentDevice:~# ping 8.8.8.8
PING 8.8.8.8 (8.8.8.8) 56(84) bytes of data.
64 bytes from 8.8.8.8: icmp_seq=1 ttl=52 time=36.9 ms
64 bytes from 8.8.8.8: icmp_seq=3 ttl=52 time=33.5 ms
64 bytes from 8.8.8.8: icmp_seq=4 ttl=52 time=31.2 ms
64 bytes from 8.8.8.8: icmp_seq=5 ttl=52 time=32.6 ms
^C
--- 8.8.8.8 ping statistics ---
5 packets transmitted, 4 received, 20% packet loss, time 4004ms
rtt min/avg/max/mdev = 31.276/33.585/36.903/2.078 ms
```

Disable WWAN0 Connection

Description: The following method can be used to disable or delete the WWAN connection that was setup using the descriptions mentioned in the previous sections.

1. Launch minicom as defined in the other sections and choose the appropriate ttyACM port for the Telit module
2. Inside the minicom terminal send the following AT commands

```
At+gmi   (to make sure it is the Telit module)
At+cgatt=0 (Response should be NO CARRIER)
AT+cgatt=1
```

3. Exit out of the minicom terminal by pressing Ctrl-A, Z and X.
4. On the Linux prompt enter the `# ifconfig wwan0 down` command to disable wwan0.

Sample Session to disable WWAN0 Connection:

```
root@WR-IntelligentDevice:~# minicom -D /dev/ttyACM0
Welcome to minicom 2.7
OPTIONS: I18n
Compiled on Dec 17 2015, 16:20:45.
Port /dev/ttyACM0, 21:33:05
Press CTRL-A Z for help on special keys
at+cgact=0,3
OK
^A X Y
root@WR-IntelligentDevice:~# ifconfig wwan0 down
```

HE910 (HSPA+) WWAN connection configuration

Description: Follow the hardware installation guide to install the HE910 module and the corresponding carrier SIM card in the system. Once the hardware module and the SIM are installed follow the instructions below to activate 3G HSPA+ connectivity.

The HSPA connection on Wind River Linux can be activated using the following UCI command set or through LuCi web interface. Below are samples steps to configure 3G WWAN interface:

1. Checking the network configuration.

```
root@WR-IDP-XXXX:~# cat /etc/config/network
...

config interface 'wwan'
    option ifname '3g-wwan'
    option proto '3g'
    option device '/dev/ttyACM0'
    option ppp_redial 'demand'
    option defaultroute '1'
    option peerdns '1'
    option service 'umts_first'
    option sconnservice 'UMTS'
    option dialnumber '*99***1#'

config device 'modem_cell'
    option name 'modem_cell'
    option present 'Yes'
    option protoall '3g'
    option pppddev '/dev/ttyACM0'
    option statedev '/dev/ttyACM3'
    option Manufacturer 'Telit'
    option Product 'HE910'
    option Vendor '1bc7'
    option ProdID '0021'
    option SerialNumber '357164040868450'
    option Rev '12.00.004'

config device 'sim_card'
    option name 'sim_card'
    option present 'No
```

2. Add **apn** according to the SIM card operator. For e.g. "3gnet" for China Unicom

```
root@WR-IDP-XXXX:~# uci set network.wwan.apn="3gnet"
root@WR-IDP-XXXX:~# uci commit network
root@WR-IDP-XXXX:~# uci get network.wwan.apn3gnet
```

3. Setup WWAN interface.

   restart wwan interface: `root@WR-IDP-XXXX:~# ifdown wwan ; ifup wwan`

   or

   restart all interfaces: `root@WR-IDP-XXXX:~# systemctl restart netifd`

4. Step 2 and Step 3 can also be performed through in **LuCi** web interface.

   On the **WWAN** tab. Set APN first, and then click **Save & Apply** button to apply the changes as shown in the sample LuCi web interface.

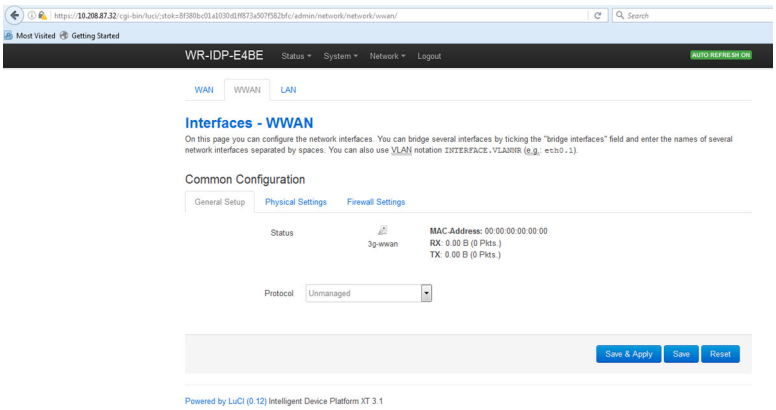

5. Check the 3g-wwan interface is ready.

```
root@WR-IDP-XXXX:~# ifconfig 3g-wwan
3g-wwanLink encap:Point-to-Point Protocol
          inet addr:10.3.203.207  P-t-P:10.3.203.207  Mask:255.255.255.255
          UP POINTOPOINT RUNNING NOARP MULTICAST  MTU:1500  Metric:1
          RX packets:238 errors:0 dropped:0 overruns:0 frame:0
          TX packets:322 errors:0 dropped:0 overruns:0 carrier:0
          collisions:0 txqueuelen:3
          RX bytes:35017 (34.1 KiB)  TX bytes:35054 (34.2 KiB)
```

Register Edge Gateway at Intel Developer Hub

The Edge Gateway 5000 series with Wind River Linux IDP 3.1 supports Developer Hub portal within the Edge Gateway. This portal can be used for performing variety of configuration functions on the Edge Gateway along with using it for developing software layers on top of the base Wind River Linux OS Image, sensor devices integration to the Edge Gateway and hardening of the combined application / base OS image for deployment.

The developer portal has to be used for registering the Edge Gateway 5000 at Intel Marketplace to obtain credentials to connect to the software package update repository. The following are the two key URLs required for developer solutions on the Edge Gateway using Wind River Linux IDP.

http://shopiotmarketplace.com : This is registration site for registering your Gateway device with Wind River Linux and obtaining credentials for Windshare repository access for package updates.

NOTE: For Edge Gateway with Wind River Linux OS image solution, your (customer's) point of contact should have already registered your contact information at Intel IoT Marketplace and you should have received notification from Intel marketplace on procedure for you to get login credentials to Windshare repository from where software packages and updates to Wind River Linux OS can be obtained. If you have not received notification from Intel IoT Marketplace, contact your sales point of contact to get you registered.

Some of the detailed documentation on how to develop for Wind River Linux OS image based Edge Gateway 5000 solution and how to utilize built in Developer Hub are available at www.intel.com/gatewaytraining please refer to that site for more details.

The following steps gives basic guidelines to follow once you receive your Edge Gateway 5000 product with Wind River Linux IDP 3.1 base OS image.

The Edge Gateway 5000 product with Wind River Linux IDP 3.1 base image from the factory is shipped with particular version of the RCPL package(RCPL 13) from Wind River. The RCPL versions from Wind River are periodically updated by the Wind River team and it is recommended for the Edge Gateway user/customers to upgrade to the latest version of RCPL by following the procedure/steps indicated below before developing software stack and middleware on top of the OS image. The latest RCPL image provides security updates and other bug fixes for the software packages.

- Connect the Ethernet WAN port ETH1 of your Edge Gateway 5000 series platform that came with factory installed Wind River Linux OS image to an internet connected router that can assign a DHCP address to the Gateway's ETH1 interface. Make sure this connection has direct internet access outside of firewall and proxy connection during initial setup.
- Login into the OS using default root/root credentials on the Edge Gateway. Find out the IP address of the ETH1 interface using ifconfig.
- In the linux prompt enter the `root@WR-IDP-XXXX:~# smart update` command to update the package cache and default repository channel. The smart update command updates the cache of already included update channels and repository.
- Enter the `root@WR-IDP-XXXX: smart channel --list` to list the default channels supported by the factory image on the Edge Gateway.
- At this point, with another browser enabled PC system connected to the same network as the Edge Gateway , type in the IP address of ETH1 interface on the browser URL address, i.e. *http:///<IP-Address-ETH1-Interface>*. Default evaluation of this was performed using Google Chrome browser, if available use Chrome browser.
- A pop-up window shows up with requiring the user to login. Log in to the browser window using "`gwuser`" as username and "`gwuser`" as password.

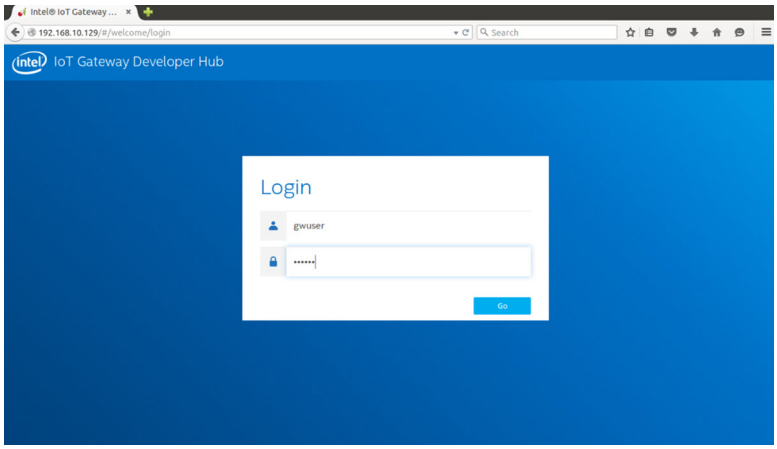

- Read license agreement and follow instructions to continue.

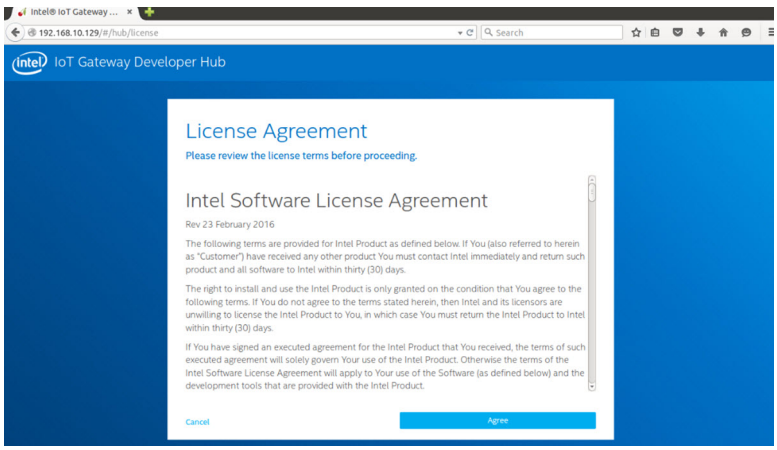

- Select the **packages** tab inside the IoT Developer Hub, search for `iot-developer-hub` package and select to update that package only, it is not necessary to update other packages at this time. Give few minutes for package to download and update.
- After update if the browser session terminates or logs the user out, follow the procedure above to log back in into the web interface. Since the update might be happening it might take couple of minutes to re-connect for the web interface to respond, wait until the interface allows to log the user back in.
- Once logged back into the developer hub, go into the "Administration" tab and choose "Upgrade to Pro" option. This tab updates all the Pro Packages from Wind River that are already licensed and available free to install with the Edge Gateway 5000 series product with Wind River OS license.
  - When Upgrade to Pro is selected, the user will be asked to enter Wind River credentials for Windshare repository. The user's sales contact should have already registered your contact information with Intel/Wind River and the user should have received email notification from Intel / Wind River describing the procedure and process to obtain the Windshare repository credential from Intel/Wind River.

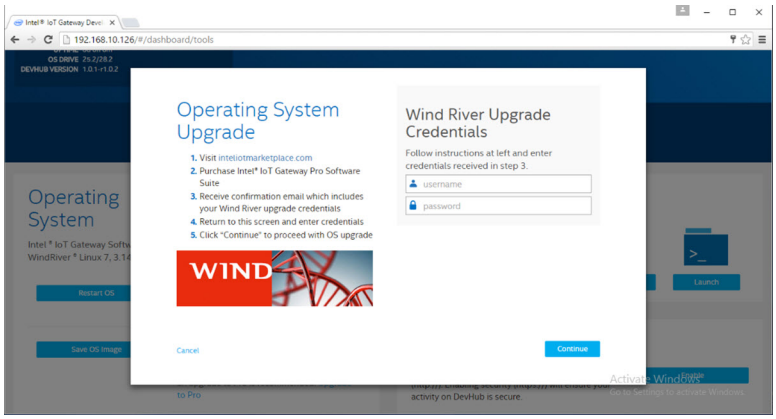

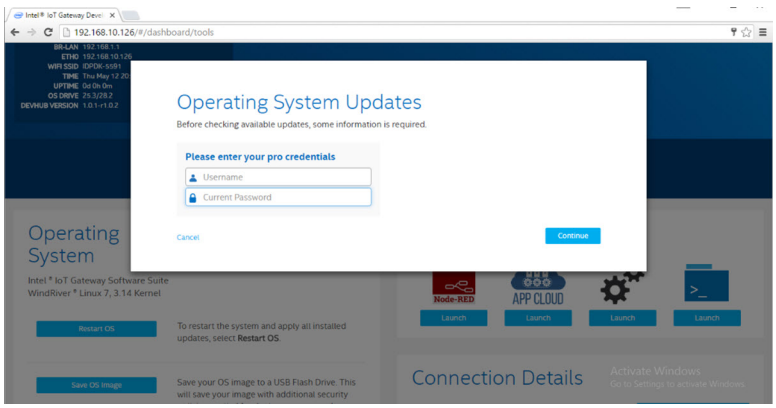

  - If you have not gotten such email, contact your sales contact to get you through the registration process to obtain credentials for the Windshare repository.
  - When the WindShare credentials are entered, additional set of repositories from where packages can be downloaded are added to the channel list. The additional set of channels can be reviewed by using the smart command in the Linux prompt – `smart channel --list`.
- Once the Wind River credentials are entered during the Upgrade to Pro package selection, the upgrade process should continue and would take some amount of time to complete. Wait for few minutes for the upgrade to complete.
- Once upgrade to Pro packages are complete, exit out of the browser and clear browser cookies and cache, re-login back into the Developer Hub using the procedure described above and under "Administration " tab choose "Install OS Updates". The system might ask for Windshare Pro credentials, re-enter the Windshare repository credentials obtained as describe in the steps above.
- At this point the system should check for update availability in the Windshare repository and would indicate if any updates are available, if available initiate the update process using the Install OS Updates. Such updates could take possibly up to an hour or more depending on your network connection. Let the system update to complete and make sure the internet connection is continuous.

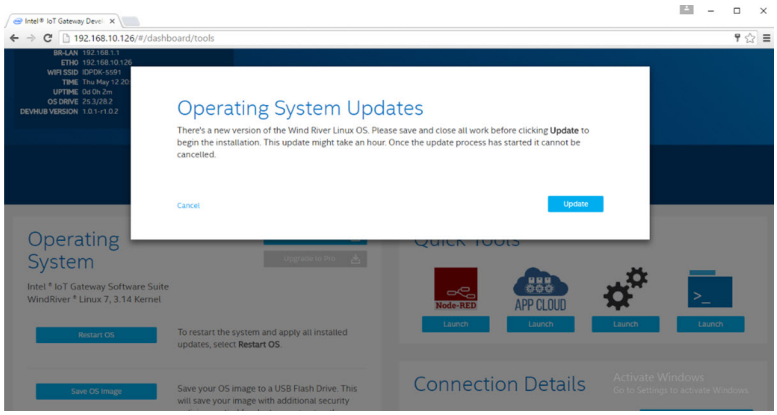

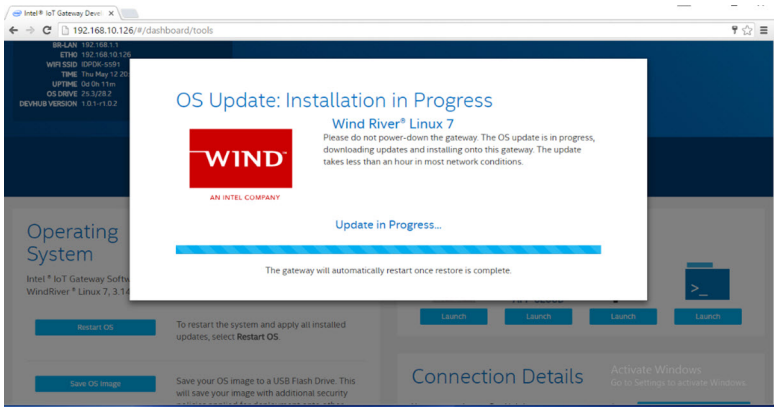

- Once the update of the OS is complete, the Edge Gateway should reboot and now the system should be upgraded to the latest RCPL release available for the Edge Gateway 5000 product at the Windshare repository. At this point the user should have an environment ready to develop other layers of applications on top of the Edge Gateway 5000 system.

  Below are some of the sample screenshots of the Developer Hub web interface described in the steps above.

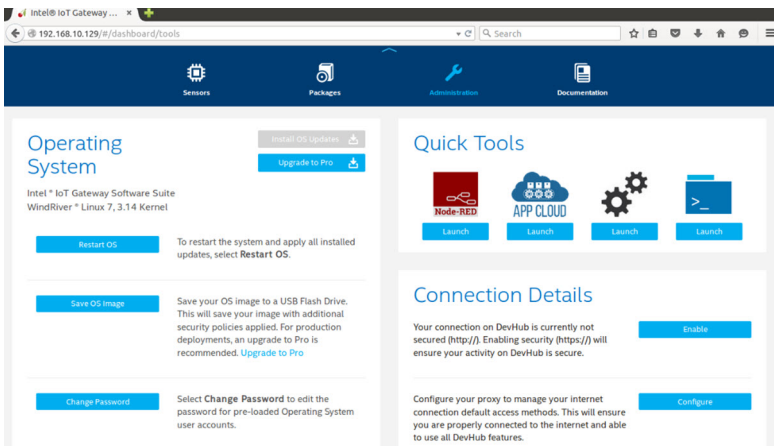

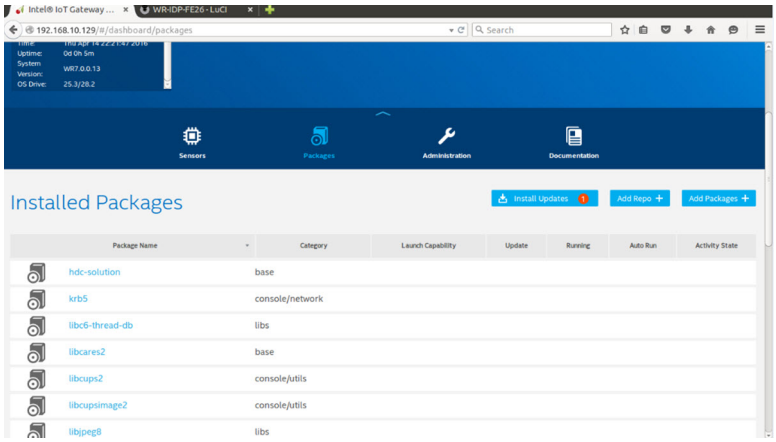

- The package tab indicates installed packages on the platform, update to the packages can be performed and additional repository channels can be added through the developer hub portal.

Common port mappings on Edge Gateway 5000 with Wind River OS

Serial Port Mapping

Description: The following table show the serial port mapping on the Edge Gateway 5000 platform installed with Dell factory installed Wind River Linux OS image. For dip switch setting on the Edge Gateway for RS422 and RS485 ports please refer to appropriate hardware installation guide document.

NOTE: Device nodes are ordered by port position starting from the leftmost RS232 port.

Table 5. Device nodes of serial ports on the Edge Gateway 5000 series

No.	Port Type	Connector	Device Node
1	RS232	DB9	**/dev/ttyS0**
2	RS422_485	5 pin terminal	**/dev/ttyS4**
3	RS485	3 pin terminal	**/dev/ttyS5**
4	RS485	3 pin terminal	**/dev/ttyS2**

Edge Gateway I/O Module GPIO Mapping

Description: The GPIOs on the Edge Gateway are managed through GPIO driver on the OS. The cloud LED on the Edge Gateway is attached to one of the GPIOs and below are the steps on how to control the cloud LED in Wind River Linux OS.

1. Export Cloud LED PIN:
```
root@WR-IDP-XXXX:~# echo 346 > /sys/class/gpio/export
root@WR-IDP-XXXX:~# echo out > /sys/class/gpio/gpio346/direction
```
2. Turn on Cloud LED:
```
root@WR-IDP-XXXX:~# echo 1 > /sys/class/gpio/gpio346/value
```
3. Turn off Cloud LED:
```
root@WR-IDP-XXXX:~# echo 0 > /sys/class/gpio/gpio346/value
```

Edge Gateway I/O Module based GPIO Mapping

Description: The GPIOs on the external I/O module for the Edge Gateway are behind PIC microcontroller. The PIC microcontroller is exposed to the host system and to the host OS as a USB-HID device. Software application developed to communicate with the GPIOs may use the protocol defined in following set of references to communicate with the GPIO modules. There are no native application software available on the factory OS image that communicates with the IO module GPIOs.

The I/O module GPIO mapping and references will be provided as a separate technical sheet and article and will be released at the support web portal for user/customer reference.

Edge Gateway I/O Module PCIe expansion mapping

Description: The PCIe slot on the external I/O module for the Edge Gateway are driven directly from the host PCIe bus. Since it is generic PCIe expansion there are no PCIe device specific drivers integrated into the Wind River Linux OS image. If there are specific PCIe card used on this slot, contact the vendor of that PCIe card to verify if they have Linux drivers and if that is a kernel mode driver such driver may have to be ported to Wind River Linux OS environment which uses 3.14 Linux kernel version on the Wind River Linux OS image shipped from the factory on the Edge Gateway.

Edge Gateway Zigbee Module Functions

Description: The Edge Gateway supports a USB Zigbee dongle as an optional add-on hardware. When the Zigbee dongle is present on the system it is enumerated to the OS as a USB device and accessed through cdc_acm kernel driver layer on the Wind River Linux host. There are no native application software on the factory installed OS image to perform Zigbee protocol for this device. A basic communication with the Zigbee module can be verified using minicom terminal interface application as well as to get basic information from the Zigbee dongle.

For example: The following command would launch minicom with device /dev/ttyACM6 assuming the Zigbee dongle is enumerated into /dev/ttyACM6 port.

```
root@WR-IDP-XXXX:~# minicom -D /dev/ttyACM6
```

The Screenshot below shows the response from the Zigbee dongle when the Zigbee USB dongle is enumerated under /dev/ttyACM6 port.

- Sending an `AT` command inside minicom session should return an `OK` from the device.

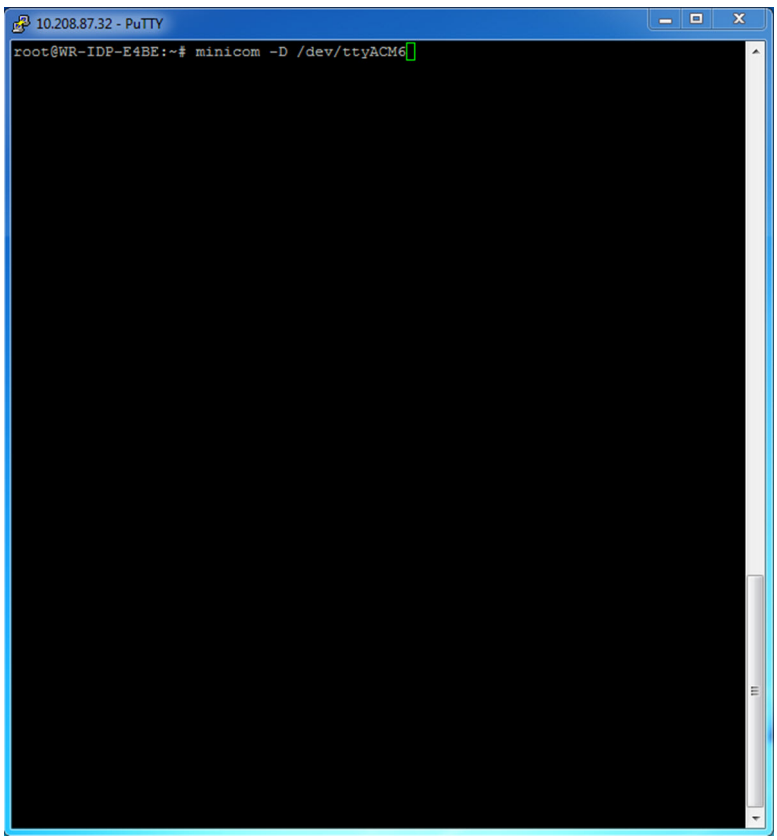

- Sending an `ATI` command inside the minicom session should return the module information like “Telegesis ETRX 3588” etc.

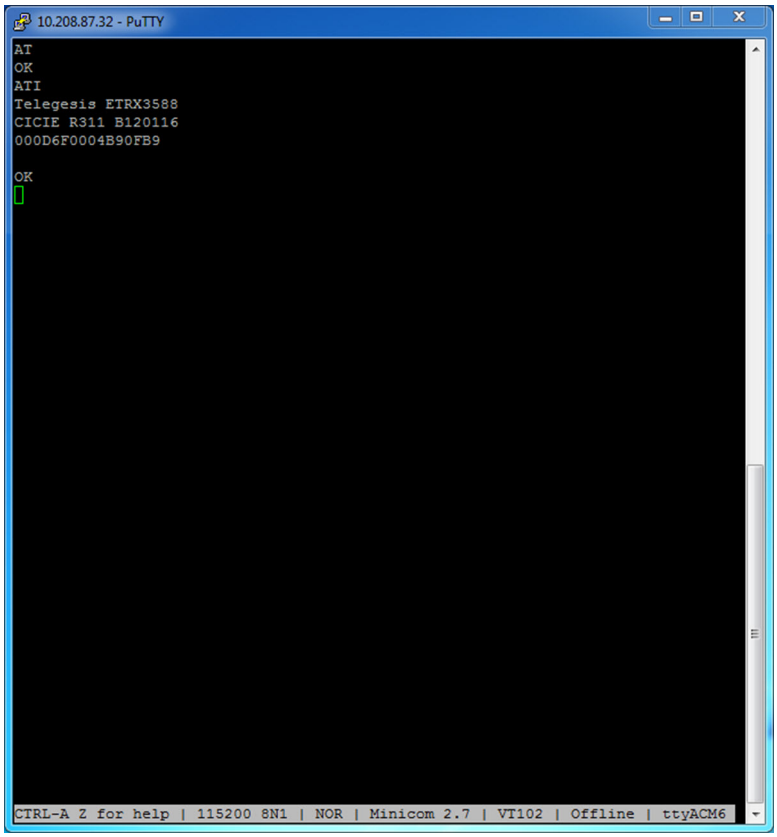

Edge Gateway CAN Module Functions

Description: The Edge Gateway supports an optional CAN module that is mounted inside the Edge Gateway itself. The CAN module is enumerated to the OS as a USB device as USB HID device to the Linux kernel driver layer on the Wind River Linux host. There are no native application software on the factory installed OS image to perform CAN protocol for this device.

The CAN module presence on the Edge Gateway can be identified by issuing “lsusb” command in the Linux prompt and looking for “Microchip Technology Inc.,” based device.

For CAN communication protocols and software API references a separate set of references and articles will be provided outside of this document.

5

System specifications

NOTE: Offerings may vary by country; not all configurations are available in all regions.

Component types

Component	5000	5100
PCB	Standard FR4	Isola 370HR
CPU	Intel E3825/E3827	Intel E3825/E3827
Memory	Dell-managed	Dell-managed
BIOS Flash	Dell-managed 128 MB SPI FLASH	Dell-managed 128 MB SPI FLASH
Super I/O	Fintek F81960D-I	Fintek F81960D-I
LAN on system-board	Realtek RTL81191-CG	Realtek RTL81191-CG
TPM	Nuvoton NPCT6SO series	Nuvoton NPCT6S4 series
SSD	60D3 LITEON	60D3 LITEON
WLAN	MURATA/ LBEE5ZZ1EN	MURATA/LBEE5ZZ1EN
WWAN	TELIT/HE910, TELIT/LE910-SV, TELIT/ LE910	TELIT/HE910, TELIT/LE910-SV, TELIT/ LE910
Coin-cell battery	CR2032	BR2032

Operating systems

Supported operating systems:

- Microsoft Windows 10 IoT Enterprise LTSB
- Ubuntu Core 16.04 and 15.04
- Wind River Linux IDP-XT 3.1

Processor

	5000/5100
Intel Atom E3825	X
Intel Atom E3827	X

Memory

	5000	5100
Type	DDR3L	DDR3L
Memory channel	Single/dual	Single/dual
Minimum memory	2 GB	2 GB
Maximum system memory	8 GB	4 GB

Drives and removable storage

	5000/5100
Supported number of mSATA hard drives (maximum)	1
32GB M.2 Solid State Drive	X
64GB M.2 Solid State Drive	X

NOTE: For hard drives, 'GB' means 1 billion bytes; actual capacity varies with pre-loaded material and operating environment and will be lower.

Communications—WLAN antenna

General specifications		
Antenna type	PCB Dipole	
Number of ports	2	
Frequency (GHz)	2.4 to 2.5	4.9 to 5.9
Voltage Standing Wave Ratio (VSWR)	2:1	2:1
Isolation (dB)	> 20	> 20
Peak gain	3.5 dBi	5.0 dBi
Average gain on sphere (3D)	> -4 dBi	> -5 dBi
Polarization	Linear	
Efficiency	> 55%	> 55%

Mechanical and environmental specifications	
Height	105.60 mm (4.16 in)
Diameter	36.20 mm (1.43 in)
IPX class	IP65

Mechanical and environmental specifications	
Mounting	Wall mounted
Connector type	SMA male
Antenna color	White
Cable type	Plenum rated low loss RG58
Cable color	White
Mounting bracket	Swivel type (plastic)
Mounting bracket length (approximate)	175 mm (6.89 in)
Mounting bracket color	Black
Pig tail length	500 mm ± 10 mm (19.69 in ± 0.39 in)

Coaxial cable specification	
Impedance	50 ± 2.00 ohms
Structural return loss	-16 dB or better from 100-2500 MHz un-terminated sample (direct bridge method)
Nominal RTL reference	-16 dB or better to 6.0 GHz
Dielectric	Foam FEP
Dielectric (outer diameter)	2.79 mm ± 0.076 mm (0.110 in ± 0.003 in)
Velocity of propagation	80%
Center conductor	Solid copper, 0.94 mm ± 0.025 mm (0.037 in ± 0.001 in)
Shield #1	Foil, aluminium/poly tape, adhered to dielectric
Diameter over foil	3.02 mm ± 0.07 mm (0.119 in ± 0.003 in)
Shield #2	Braid, 90% 36-AWG tin/copper
Outer jacket	Plenum PVDF, off-white, lead-free, and UV stable
Outer diameter	4.52 mm ± 0.15 mm (0.178 in ± 0.006 in)
PLENUM rating	CMP(ETL)C(ETL)
Attenuation dB/100 feet (nominal reference values)	• 8.0 dB@ 450 MHz • 12.5 dB @900 MHz • 19.6 dB@ I.8 GHz • 23.6 dB @ 2.5 GHz • 23.0 dB @ 3.0 GHz • 27.5 dB @ 4.0 GHz • 31.0 dB @ 5.0 GHz • 35.0 dB @ 6.0 GHz
Installation temperature	-20°C (-4°F) to +65°C (149°F)
Operating temperature	-30°C (-22°F) to +65°C (149°F)
CC pullout	6 pound-force minimum, 16 pound-force maximum

Coaxial cable specification	
Jacket pullout	4.5 pound-force minimum on 76.2 mm (3 in) section at 12.7 mm (0.5 in) per minute
Minimum bend radius	12.7 mm (0.5 in) static bend
Leakage	-90 dB

Communications—WWAN antenna

General specifications									
Antenna type	PCB Dipole								
Number of ports	2								
Frequency (MHz)	698-803	791-862	824-894	880-960	1710- 1880	1850- 1990	1710- 2155	1920- 2170	2500-2690
VSWR	2:1								
Isolation (dB)	> 15								
Peak gain	< 5.0dBi	< 5.0dBi	<5.0dBi	< 3.7dBi	< 5.0dBi	< 3.3dBi	<3.3dBi	< 5.0dBi	< 5.0dBi
Average gain on sphere (3D)	> -3 dBi								
Polarization	Linear								
Efficiency	> 40%								

Mechanical and environmental specifications	
Height	254 mm (10 in)
Diameter	41 mm (1.61 in)
Weight	820 g (with mounting holder)
IPX class	IP65
Mounting	Wall mounted
Connector type	SMA male
Antenna color	White
Cable type	Plenum rated low loss RG58
Cable color	White

Mechanical and environmental specifications	
Mounting bracket	Swivel type (plastic)
Mounting bracket length (approximate)	175 mm (6.89 in)
Mounting bracket color	Black
Pig tail length	1000 mm (39.37 in)

Coaxial cable specification	
Impedance	50 ± 2.0 ohms
Structural return loss	-16 dB or better from 100-2500 MHZ un-terminated sample (direct bridge method)
Nominal RTL reference	-16 dB or better to 6.0 GHz
Dielectric	Foam FEP
Dielectric (outer diameter)	2.79 mm ± 0.076 mm (0.110 in ± 0.003 in)
Velocity of propagation	80%
Center conductor	Solid copper, 0.94 mm ± 0.025 mm (0.037 in ± 0.001 in)
Shield #1	Foil, aluminium/poly tape, adhered to dielectric
Diameter over foil	3.02 mm ± 0.07 mm (0.119 in ± 0.003 in)
Shield #2	Braid, 90% 36-AWG tin/copper
Outer jacket	Plenum PVDF, off-white, lead-free, and UV stable
Outer diameter	4.52 mm ± 0.15 mm (0.178 in ± 0.006 in)
Outer Jacket	Plenum PVDF, Off-white, lead free, and UV stable
Outer Diameter	4.52 mm ± 0.15 mm (0.178 in ± 0.006 in)
PLENUM rating	CMP(ETL)C(ETL)
Attenuation dB/100 feet (nominal reference values)	• 8.0 dB@ 450 MHz • 12.5 dB @900 MHz • 19.6 dB@ l.8 GHz • 23.6 dB @ 2.5 GHz • 23.0 dB @ 3.0 GHz • 27.5 dB @ 4.0 GHz • 31.0 dB @ 5.0 GHz • 35.0 dB @ 6.0 GHz
Installation temperature	-20°C (-4°F) to +65°C (149°F)
Operating temperature	-30°C (-22°F) to +65°C (149°F)
CC pullout	6 pound-force minimum, 16 pound-force maximum
Jacket pullout	4.5 pound-force minimum on 76.2 mm (3 in) section at 12.7 mm (0.5 in) per minute
Minimum bend radius	12.7 mm (0.5 in) static bend
Leakage	-90 dB

Measured antenna peak gain (antenna only)				
	Main antenna		**Auxiliary antenna**	
Frequency (MHz)	Horizontal (dBi)	Vertical (dBi)	Horizontal (dBi)	Vertical (dBi)
698	0.09	0.63	1.19	1.12
704	-0.11	0.66	0.89	0.91
710	-0.27	0.60	0.51	0.78
716	-0.08	0.55	0.42	0.86
734	0.17	0.57	0.68	0.97
740	0.35	0.60	0.86	0.99
746	0.38	0.92	1.00	1.03
734	0.49	1.12	1.16	1.10
740	0.67	1.42	1.39	1.11
746	0.95	1.56	1.51	1.20
756	1.48	2.10	1.63	1.53
765	1.81	2.42	1.64	1.63
772	1.93	2.47	1.40	1.57
777	2.00	2.50	1.33	1.60
782	1.85	2.36	1.02	1.48
787	1.67	2.25	0.73	1.43
791	1.62	2.21	0.90	1.37
806	1.69	2.34	1.68	1.61
821	1.70	2.02	1.97	1.91
824	1.63	1.93	1.91	1.91
836	1.65	1.65	1.80	1.71
849	1.63	1.46	1.79	1.40
862	1.65	1.34	2.01	1.19
869	1.60	1.26	2.07	1.04
880	1.72	1.24	2.16	1.09
894	1.69	1.06	2.15	0.96

Measured antenna peak gain (antenna only)				
900	1.71	1.00	2.13	0.94
915	1.65	1.03	1.87	0.82
925	1.57	1.16	1.61	0.74
940	1.30	1.36	1.24	0.60
960	1.43	1.31	0.98	0.69
1710	2.19	2.18	1.83	2.39
1730	2.25	2.29	1.66	2.36
1750	1.90	2.15	1.39	2.29
1770	1.33	1.91	0.97	1.83
1785	0.88	1.76	0.66	1.50
1805	0.40	1.59	0.34	1.26
1840	-0.12	1.49	-0.01	1.18
1850	-0.06	1.58	0.04	1.18
1880	0.36	1.65	0.51	1.49
1910	0.72	1.76	0.90	1.81
1920	0.86	1.85	0.91	1.99
1930	1.01	1.89	0.95	2.15
1950	1.29	2.16	0.99	2.28
1960	1.23	2.32	0.91	2.29
1980	0.98	2.43	0.95	2.19
1995	0.35	2.22	0.74	1.80
2110	0.72	1.06	1.37	1.28
2140	0.82	1.08	1.58	1.31
2170	1.15	1.22	1.85	1.18
2300	2.23	2.40	2.97	1.63
2325	1.76	2.18	2.48	1.74
2350	1.44	1.74	2.08	1.66
2375	1.26	1.59	1.84	1.46

Measured antenna peak gain (antenna only)				
2400	1.29	1.91	1.85	1.63
2500	3.17	2.75	2.94	2.47
2515	3.11	2.62	2.78	2.47
2535	2.88	2.42	2.55	2.48
2555	2.51	2.09	2.18	2.46
2570	2.21	1.91	1.92	2.46
2570	2.21	1.91	1.92	2.46
2595	1.89	1.65	1.56	2.45
2620	1.69	1.68	1.44	2.35
2620	1.69	1.68	1.44	2.35
2630	1.80	1.76	1.43	2.41
2655	1.78	1.82	1.63	2.60
2680	1.98	2.20	2.02	2.59
2690	2.07	2.38	2.17	2.55

Graphics/video controller

5000/5100
Intel integrated graphics

External ports and connectors

NOTE: For locations of ports and connectors, see System views.

NOTE: For RS422 and RS485:

- Termination is 120-ohms between the members of the differential pair when enabled.
- Bias is 4.7k pull-up (5V)/pull-down (GND) when enabled.

	Number of ports	Manufacturer part number
RS-232	1	None
RS-485	2	Molex 39530-5503 https://www.molex.com/ **NOTE: This part number is for reference only and is subjected to change.**

	Number of ports	Manufacturer part number
RS-422/RS-485 combo (configurable via DIP switches)	1	Molex 39530-5505 https://www.molex.com/ **NOTE: This part number is for reference only and is subjected to change.**
Network connector (RJ-45)–Dual gigabit ethernet	2	None
HDMI Port 1.4	1	None
Line out for headphones or speakers	None	None
Universal audio jack	None	None
USB 2.0	2	None
USB 3.0	1	None
CANBus (3–pin Phoenix connector)	1	Molex 39530-5503 https://www.molex.com/ **NOTE: This part number is for reference only and is subjected to change.**

Dimensions and weight

NOTE: System weight and shipping weight are based on a typical configuration and may vary depending on PC configuration. A typical configuration includes: integrated graphics, one hard drive, and one optical drive.

Product dimensions and weight

	5000	5100	IO module	Power module	IP65 rugged enclosure
Volume (Liters)	3.167 L	3.675 L	2.14 L	1.634 L	13.62 L
Weight	3.0 kg (6.6 lb)	3.3 kg (7.3 lb)	1.2 kg (2.6 lb)	1.4 kg (3.1 lb)	6.3 kg (13.9 lb)
Height	228.4 mm (8.99 in)	228.4 mm (8.99 in)	207.60 mm (8.17 in)	117.80 mm (4.64 in)	388 mm (15.28 in)
Width	216 mm (8.50 in)	216 mm (8.50 in)	216 mm (8.50 in)	216 mm (8.50 in)	440 mm (17.46 in)
Depth	64.20 mm (2.52 in)	74.50 mm (2.93 in)	47.70 mm (1.88 in)	64.20 mm (2.53 in)	79.80 mm (3.14 in)

NOTE: The dimensions for the enclosure do not include the latches and wall bracket on the back of the enclosure. The wall bracket adds 5 mm (0.04 inches) to the depth.

Packaging dimensions and weight

	5000	5100	IO Module	Power module	IP65 rugged enclosure
Height	34.4 cm (13.56 in)	34.4 cm (13.56 in)	25.4 cm (10 in)	25.4 cm (10 in)	52.7 cm (20.75 in)
Width	29.5 cm (11.63 in)	29.5 cm (11.63 in)	13.2 cm (5.2 in)	11.4 cm (4.49 in)	15.9 cm (6.26 in)
Depth	15.6 cm (6.13 in)	15.6 cm (6.13 in)	18.1 cm (7.12 in)	18.1 cm (7.12 in)	52 cm (20.47 in)
Shipping weight (includes packaging materials)	3.8 kg (8.38 lb)	3.8 kg (8.38 lb)	1.48 kg (3.26 lb)	1.63 kg (3.59 lb)	7.79 kg (17.17 lb)

NOTE: The antenna is shipped in a separate accessory box along with your Edge Gateway.

Mounting dimensions

	5000	5100	IO module	Power module	IP65 rugged enclosure
Height	246 mm (9.69 in)	246 mm (9.69 in)	246 mm (9.69 in)	246 mm (9.69 in)	458.2 mm (18.04 in)
Width	228.4 mm (8.99 in)	228.4 mm (8.99 in)	228.2 mm (8.98 in)	130.8 mm (5.15 in)	405.6 mm (15.97 in)
Depth	72.7 mm (2.86 in)	83 mm (3.27 in)	56.2 mm (2.21 in)	72.7 mm (2.86 in)	91.8 mm (3.61 in)

Environmental and operating conditions

Environmental conditions—System

Environmental requirements	
Ingress protection rating	IP50
Temperature range:	
Operating (with a maximum temperature gradation of 15°C per hour)	**Edge Gateway 5000** • 0°C to 50°C (32°F to 122°F) when connected to a 24 V AC/DC power source. • 0°C to 40°C (32°F to 104°F) when connected to a power adapter or battery. **Edge Gateway 5100** • -30°C to 70°C (-22°F to 158°F) when connected to a 24 V AC/DC power source. • 0°C to 40°C (32°F to 104°F) when connected to a power adapter or battery. **NOTE: The maximum operating temperature is derated 1°C/305 m (1000 ft) above sea level altitude.**
Non-operating	-40°C to 85°C (-40°F to 185 °F)
Relative humidity (maximum):	

Environmental requirements	
Operating (with maximum humidity gradation of 10% per hour)	10% to 90% (non-condensing)
Non-operating ((with maximum humidity gradation of 10% per hour)	5% to 95% (non-condensing)
Altitude (maximum, unpressurized):	
Operating	-15.2 m to 5000 m (-50 ft to 16,404 ft) **NOTE: The maximum operating temperature is derated 1°C/305 m (1000 ft) above sea level altitude.**
Storage	-15.2 m to 10,668 m (-50 ft to 35,000 ft)

Environmental conditions—IO module

Environmental requirements	
Ingress protection rating	IP50 **NOTE: Enclosure meets IP50 with the pre-installed PCIe blank bracket. System IP rating depends on the PCIe card IP rating.**
Temperature range:	
Operating (with a maximum temperature gradation of 15°C per hour)	-30°C to 70°C (-22°F to 158°F) **NOTE: The maximum operating temperature is derated 1°C/305 m(1000 ft) above sea level altitude.** **NOTE: The enclosure meets this specification without a PCIe card. Operating temperature may change if a PCIe card is installed.** **NOTE: Any component to be installed in the IO module shall have a still air temperature rating that is equal to or higher than the PCIe card temperature rating. For IO modules without PCIe cards, use a system ambient temperature of +3°C (+37.4°F) to determine the inside air temperature.**
Non-operating	-40°C to 85°C (-40°F to 185 °F)
Relative humidity (maximum):	
Operating (with maximum humidity gradation of 10% per hour)	10% to 90% (non-condensing)
Non-operating (with maximum humidity gradation of 10% per hour)	5% to 95% (non-condensing)
Altitude (maximum, unpressurized):	
Operating	-15.2 m to 5000 m (-50 ft to 16,404 ft) **NOTE: The maximum operating temperature is derated 1°C/305 m (1000 ft) above sea level altitude.**
Storage	-15.20 m to 10,668 m (-50 ft to 35,000 ft)

Supported PCIe card power—PCIe card temperatures and power ratings must meet following requirements:

System ambient after altitude derating (°C/°F)	Maximum supported power dissipation (W) for 85°C (185°F) or above still air rated PCIe cards	Maximum supported power dissipation (W) for 70°C (158°F) still air rated PCIe cards	Maximum supported power dissipation (W) for 55°C (131°F) still air rated PCIe cards
20/68	15	12	8
25/77	14	10	6
30/86	13	9	5
35/95	12	8	4
40/104	10	6	3
45/113	9	5	2
50/122	8	4	1
55/131	6	3	Not supported
60/140	5	2	Not supported
65/149	4	1	Not supported
70/158	3	Not supported	Not supported

NOTE: PCIe cards must support still air environment and must not require active cooling.

NOTE: PCIe cards rated above 25 W are not supported regardless of temperature rating.

NOTE: If a PCIe card is rated at a temperature that is not shown in the table, use interpolation to calculate the maximum supported power.

NOTE: If a PCIe card is rated at a temperature greater than 85°C (185°F), it shall be treated as an 85°C (185°F) rated card in determining the supported power.

Environmental conditions - Power module

Environmental requirements	
Ingress protection rating	IP50
Temperature range:	
Operating (with a maximum temperature gradation of 15°C per hour)	• -30°C to 70°C (-22°F to 158°F) when connected to a 24V AC/DC power source. • 0°C to 40°C (32°F to 104°F) when connected to a power adapter or battery. **NOTE: The maximum operating temperature is derated 1°C/305m(1000ft) above sea level altitude.**
Non-operating	-40°C to 85°C (-40°F to 185 °F)
Relative humidity (maximum):	
Operating (with maximum humidity gradation of 10% per hour)	10% to 90% (non-condensing)
Non-operating ((with maximum humidity gradation of 10% per hour)	5% to 95% (non-condensing)
Altitude (maximum, unpressurized):	

Environmental requirements	
Operating	-15.2m to 5000m (-50ft to 16,404ft) **NOTE: The maximum operating temperature is derated 1°C/305m (1000ft) above sea level altitude.**
Storage	-15.20 m to 10,668 m (-50 ft to 35,000 ft)

Environmental conditions - Enclosure

Environmental requirements	
Ingress protection rating	IP65 **NOTE: Require IP65 or above conduit connection.**
Temperature range:	
Operating (with a maximum temperature gradation of 15°C per hour)	• Edge Gateway 5000: 0°C to 45°C (32°F to 113°F) • Edge Gateway 5100: -30°C to 70°C (-22°F to 158°F) **NOTE: The maximum operating temperature is derated 1°C/305 m (1000 ft) above sea level altitude.** **NOTE: The maximum operating temperature is derated 18°C (64.4°F) under direct solar thermal load.**
Non-operating (with a maximum temperature gradation of 15°C per hour)	-40°C to 85°C (-40°F to 185 °F)
Relative humidity (maximum):	
Operating (with maximum humidity gradation of 10% per hour)	10% to 90% (non-condensing)
Non-operating ((with maximum humidity gradation of 10% per hour)	5% to 95% (non-condensing)
Altitude (maximum, unpressurized):	
Operating	-15.2 m to 5000 m (-50 ft to 16,404 ft) **NOTE: The maximum operating temperature is derated 1°C/305 m (1000 ft) above sea level altitude.**
Storage	-15.2 m to 10,668 m (-50 ft to 35,000 ft)

Operating conditions

Maximum vibration

	5000	5100
Operational	1.54 Grms, 15 min/side	1.54 Grms, 60 min/side

Maximum shock

	5000	5100
Operational	40 G, 2 ms	40 G, 2 ms
Non-operational	160 g, 2 ms Half Sine Shock	160 g, 2 ms Half Sine Shock

Maximum altitude

	5000	5100
Operational	-15.2 m to 5000 m (-50 ft to 16,404 ft)	-15.2 m to 5000 m (-50 ft to 16,404 ft)
Non-operational	-15.2 m to 10,668 m (-50 ft to 35,000 ft)	-15.2 m to 10,668 m (-50 ft to 35,000 ft)

Power

Power adapter (optional)

General parameters	
Power supply	EPS Level V
Wattage	65 W
AC input voltage range	90-264 Vac
AC input current (low AC range/high AC range)	1.7 A/1.0 A
AC input frequency	47 Hz/63 Hz
Average efficiency (ESTAR 5.2 compliant)	87%

DC parameters	
+19.5 v output	19.50 V/ 3.34 A
Total power (maximum)	65 W
BTUs/h (based on PSU max wattage)	222 BTU

Power-input tolerances	
24V AC/DC	+10% to -25% (26.4 V to 18.0 V)
Power module—Battery connector	• Charging—Charging shuts down when the battery voltage reaches 14 V. • Powering the system—System will shutdown is the voltage from the battery is below 10 V.

GPIOs voltage levels

GPIO voltage levels	
GPIO 2~9	Bi-directional I/O, Analog input

GPIO voltage levels		
	3.3 V Schmitt-trigger input	
	3.3 V push-pull output	
	Minimum	**Maximum**
Input low voltage (V_{il})	0.00 V	0.66 V
Input high voltage (V_{ih})	2.15 V	3.30 V
Output low voltage (V_{ol})	0.00 V	0.40 V
Output high voltage (V_{oh})	2.40 V	3.30 V
Output sink/source current	-9 mA (sink 9mA)	10 mA (source 10mA)

3.0 V CMOS coin-cell battery

	Type	Brand	Voltage	Composition
Edge Gateway 5000	CR2032	Jhih Hong	3 V	Lithium
		Panasonic	3 V	Lithium
		Mitsubitshi	3 V	Lithium
		Shun Wo & KTS	3 V	Lithium
Edge Gateway 5100	BR2032	Panasonic	3 V	Lithium

NOTE: Dell recommends checking or replacing the coin-cell battery prior to operation if the system has been disconnected from a power source for more than two years.

Security

	5000/5100
Trusted Platform Module (TPM)	• TPM 1.2 • TPM 2.0 (for Windows 10 only)
Chassis Intrusion Switch	Available when system is installed in (optional) enclosure. When enclosure door is opened, a message appears in the BIOS during Power-On Self-Test (POST), indicating door is open. A log is also created.

NOTE: TPM is not available in all countries. Depending on your country regulations, TPM system boards may be unavailable.

Software

	5000/5100
Dell Edge Device Manager (systems management)	Optional

Environmental

NOTE: For more details on Dell environmental features, see Dell's Environmental Compliance.

	5000/5100
BFR/PVC-free	No

Service and support

NOTE: For more details on Dell service plans, see Dell service plans

	5000/5100
One year base hardware warranty, with mail-in service	Included
Basic extensions up to five years, with mail-in service	Available
ProSupport extensions up to five years, with next business day on-site service	Available

NOTE: For a copy of our guarantees or limited warranties, write to 'Dell USA L.P., Attn: Warranties, One Dell Way, Round Rock, TX 78682'. For more information, visit www.dell.com/warranty.

NOTE: Service may be provided by third-party. A technician will be dispatched if necessary following phone-based troubleshooting. Subject to parts availability, geographical restrictions and terms of service contract. Service timing dependent upon time of day call placed to Dell U.S.

6

I/O Module Overview

The I/O module allows you to install a PCIe x1 card and adds additional ports to your Dell Edge Gateway.

NOTE: The power module is required to be installed with the Dell Edge Gateway to enable and use the I/O expansion module.

IO module (optional) views

IO module—Front

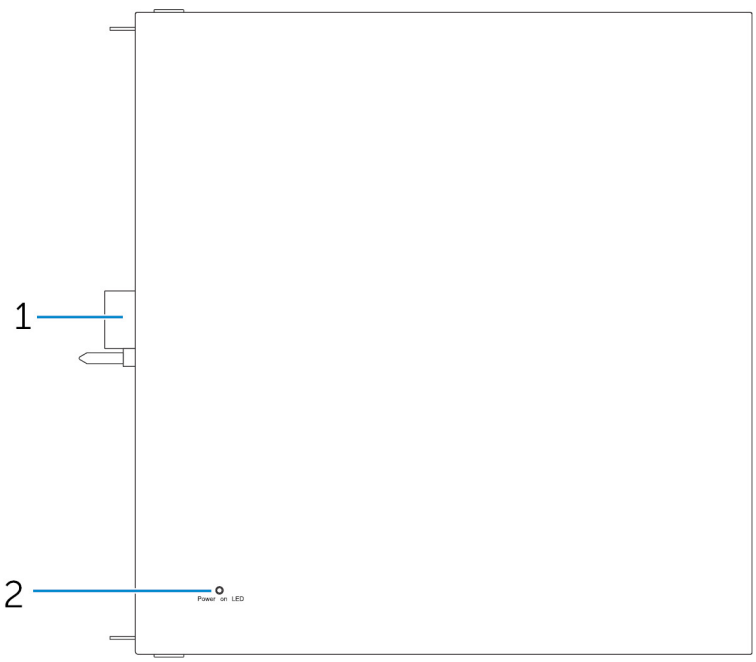

Features		
1	IO module expansion connector and guide pin	Connect the IO module to the Edge Gateway.
2	Power status light	Indicates the power state of the IO module and the Edge Gateway.

IO module—Top

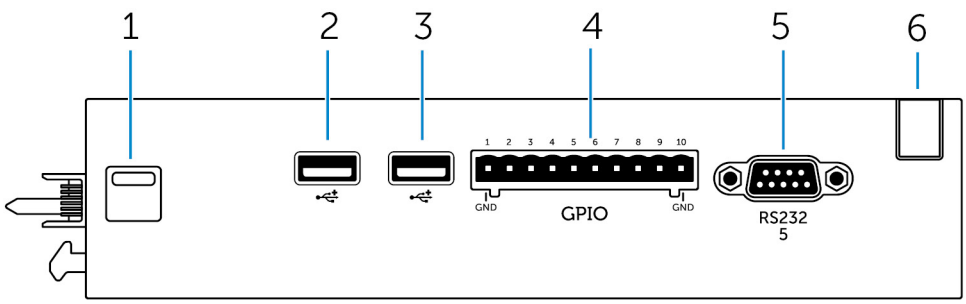

Features		
1	Top release latch	Push both the top and bottom release latches to disconnect the power module from the Edge Gateway.
2	USB 2.0 port	For USB 2.0 devices.
3	USB 2.0 port	For USB 2.0 devices.
4	GPIO port	Connect a GPIO 8–pin cable.
5	RS232 port	Connect an RS232 cable.
6	Cable routing slot	Route any cable(s) that has to be connected to the PCI card installed in the IO module.

GPIO connector mapping

Pin	Signal	PIC Pin	Full Pin Name
1	GND		
2	GPIO	1	AN22/RPE5/PMD5/RE5
3	GPIO	2	AN23/PMD6/RE6
4	GPIO	3	AN27/PMD7/RE7
5	GPIO	4	AN16/C1IND/RPG6/SCK2/ PMA5/RG6
6	GPIO	5	AN17/C1INC/RPG7/ PMA4/RG7
7	GPIO	6	AN18/C2IND/RPG8/ PMA3/RG8
8	GPIO	21	AN8/RPB8/CTED10/RB8
9	GPIO	22	AN9/RPB9/CTED4/ PMA7/RB9
10	GND		

Manufacturer part number	Molex 39530-5510

https://www.molex.com/

NOTE: This part number is for reference only and is subjected to change.

RS232 port on IO expansion module connector mapping

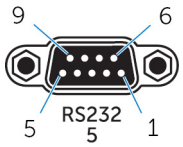

Pin	Signal	Pin	Signal
1	DCD	6	DSR
2	RXD	7	RTS
3	TXD	8	CTS
4	DTR	9	RI
5	GND		

NOTE: This is a standard serial port connector.

IO module—Bottom

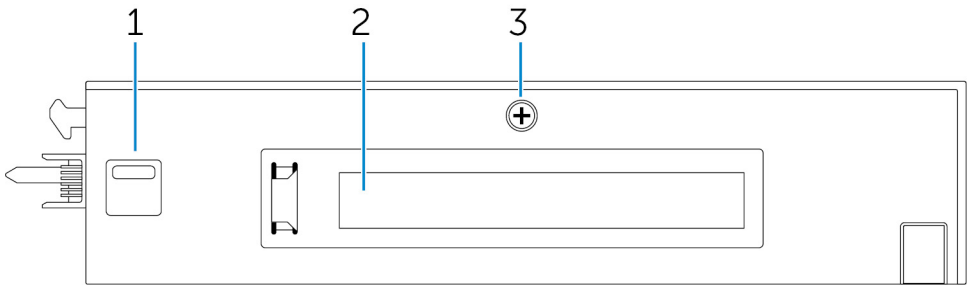

Features		
1	Bottom release latch	Push both the top and bottom release latches to disconnect the power module from the Edge Gateway.
2	PCIe x1 card slot	Install PCIe x1 card on the IO module.
3	IO module cover removal screw	Remove the screw to open the box and install the PCIe card.

Setting up the IO module

CAUTION: Before touching anything inside the system, ground yourself by touching an unpainted metal surface. While you work, periodically touch an unpainted metal surface to dissipate static electricity, which could harm internal components.

NOTE: Install the PCIe expansion card in the IO expansion module before mounting it on wall mount or DIN rail.

1. Install the PCIe expansion card in the IO expansion module—optional.
   For more information, see Installing the PCIe card into the IO module.
2. Attach either wall-mount brackets or a DIN rail mount to the power module as needed.
3. Remove the screw and the dust cap covering the power module expansion port on the Edge Gateway connector.

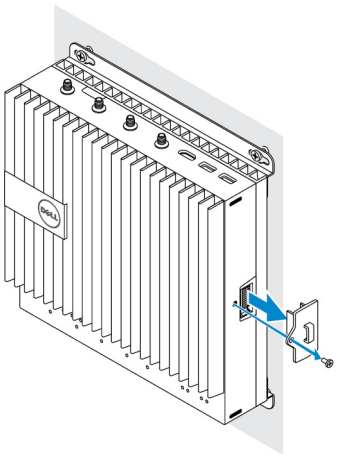

4. Align the power module guide pins to the power module port on the Edge Gateway and slide the power module toward the Edge Gateway until fully seated.

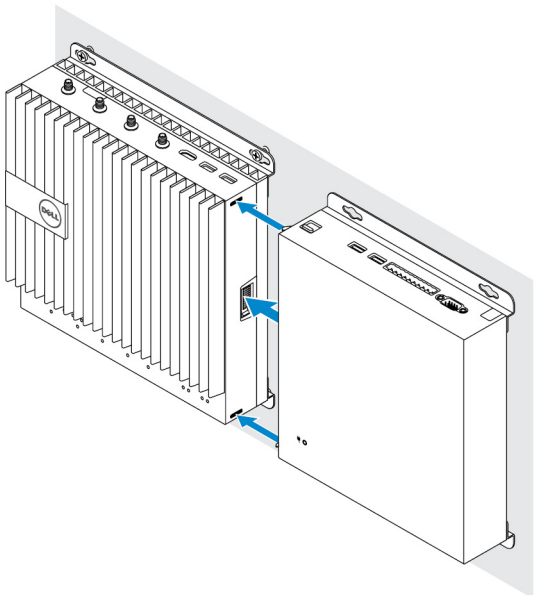

5. Ensure the top and bottom latches are locked to secure the module to the Edge Gateway.

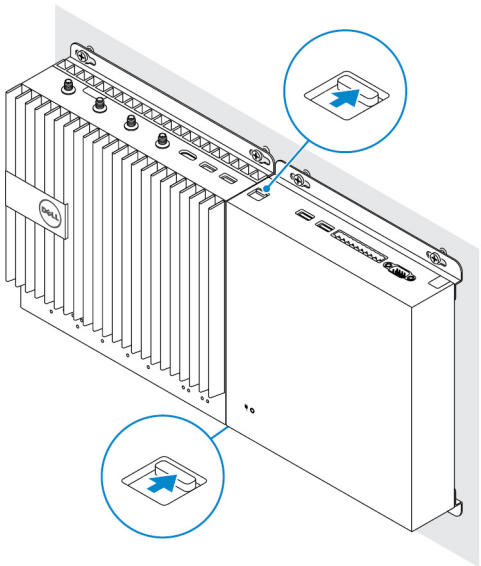

6. Install the Edge Gateway and the IO module along with the power module at a desired location using a wall-mount bracket or the DIN rail mount.

Wall mount bracket

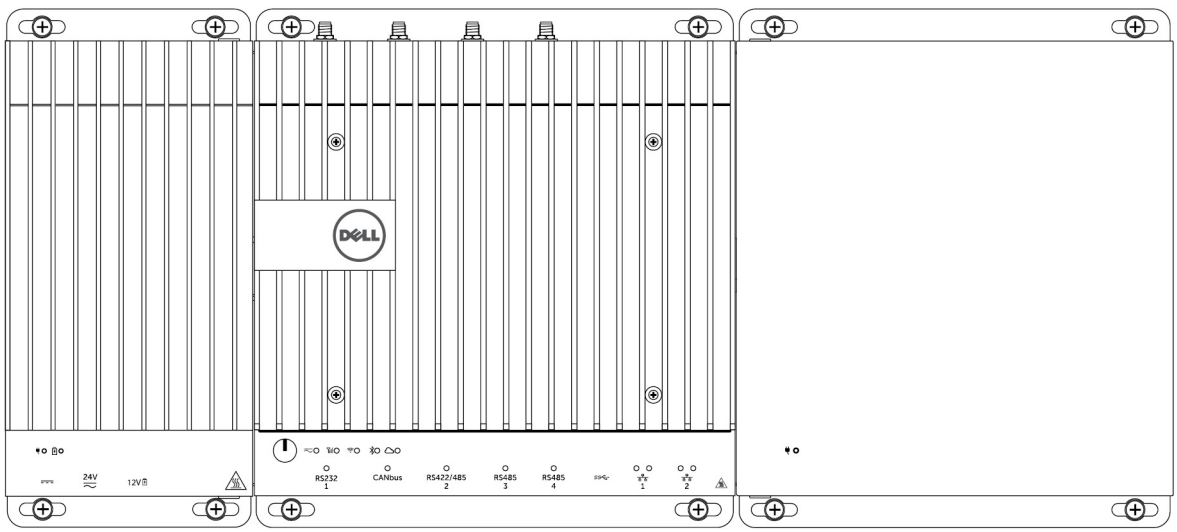

DIN rail mount

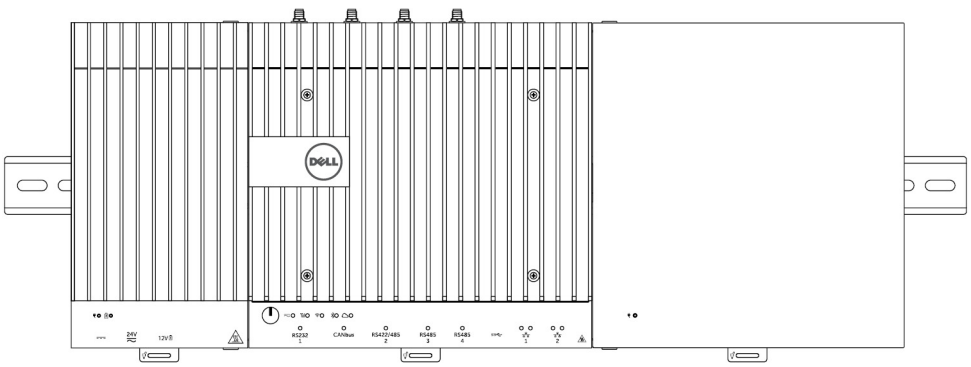

7. Connect to a power source, and press the power button.

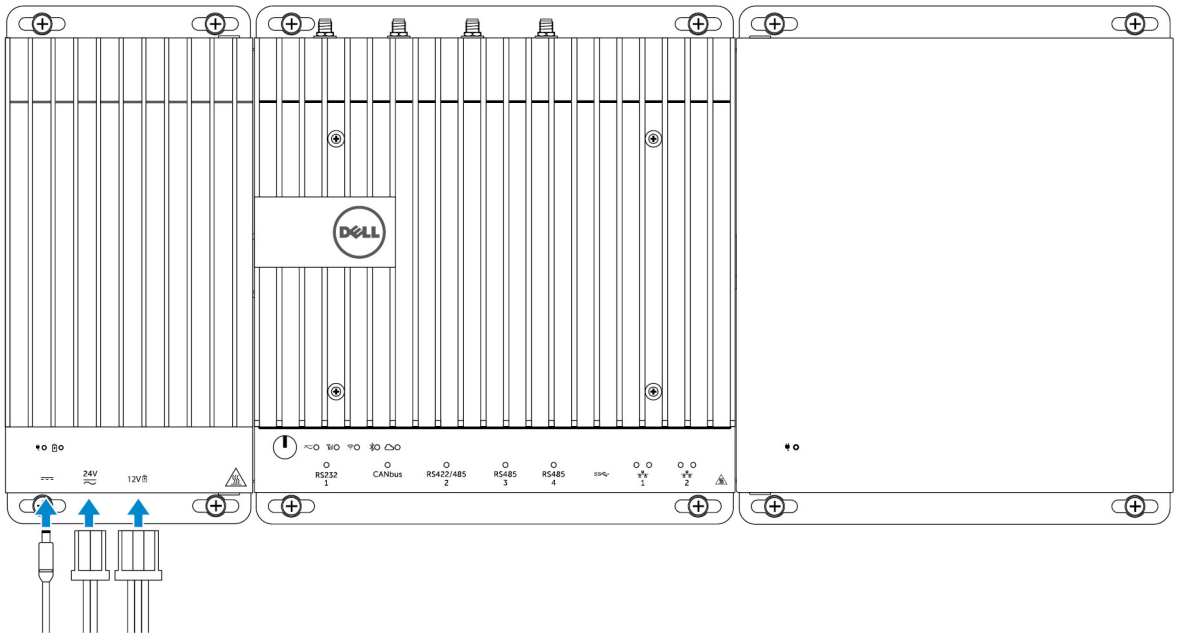

NOTE: Connect a power cable to the 24 V AC/DC or 19.5 V DC power adapter port on the power module.

NOTE: The power adapter and sealed lead-acid battery is sold separately.

NOTE: To enable and use the IO expansion module, you must also install the power module.

Installing the PCIe card into the IO module

CAUTION: Electrical and electronic devices are sensitive to electrostatic discharge (ESD). Exposure to ESD can harm your device and potentially cause it not to function properly. Ensure that you are properly grounded before handling the mobile broadband card.

NOTE: Install the PCIe expansion card in the IO expansion module before mounting it on a wall mount or DIN rail.

1. Open the IO module.
   a. Remove the dust caps and loosen the access cover screw that secures the IO expansion module to the cover.
   b. Slide the module in the direction shown, and then carefully lift the top cover from the module.

   CAUTION: Remove the cover carefully to avoid damaging the LED light cable, which is mounted on the bottom of the cover.

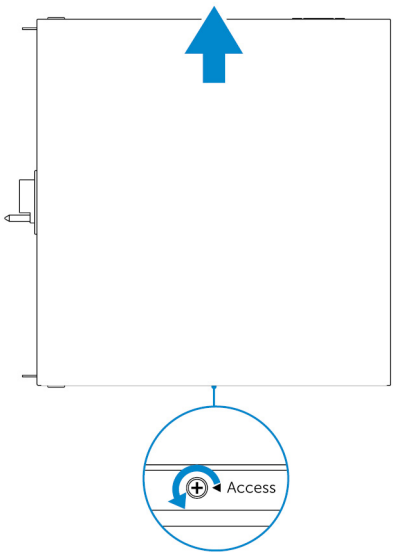

2. Remove the PCIe expansion card-slot cover.

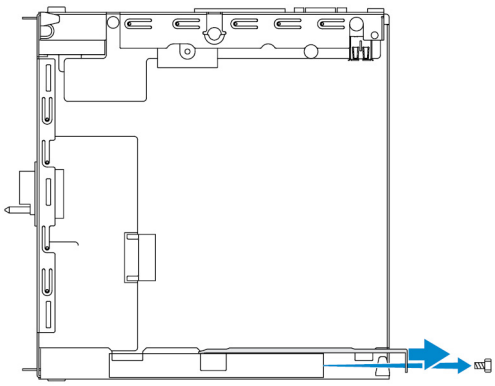

3. Install the PCIe card into the PCIe expansion card slot on the IO expansion module and secure with a screw.

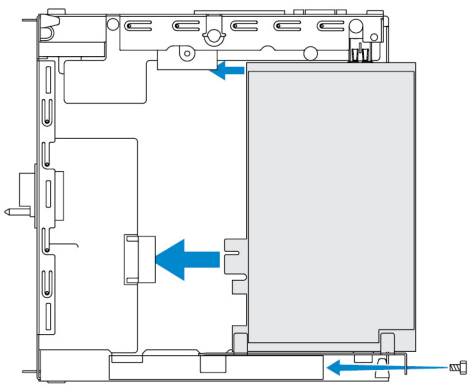

4. Replace the cover on the IO expansion module.

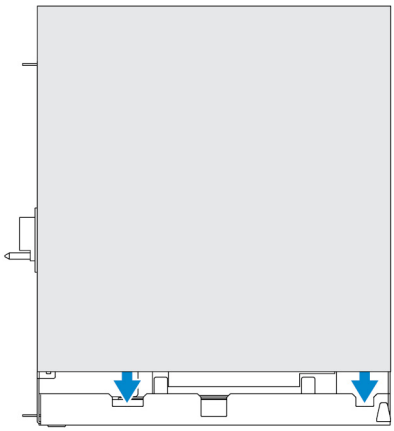

5. Tighten the screw that secures the cover to the IO expansion module.

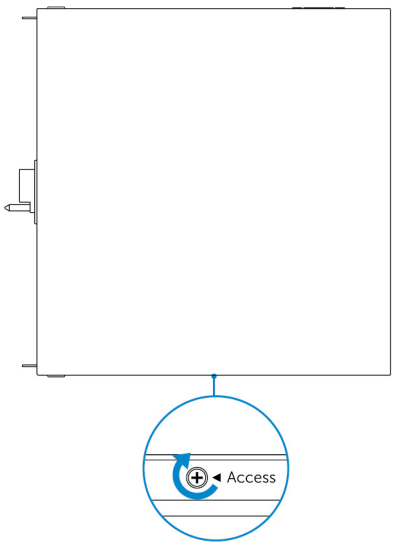

NOTE: Replace the dust caps on any unused ports and connectors.

7

Power Module Overview

The power module allows you to connect additional power sources to your Dell Edge Gateway. The power module allows you to connect to all three power sources, that is, the 24V AC/DC, 19.5 VDC, and a battery.

NOTE: The Power Module is required to be installed with the Dell Edge Gateway to enable and use the I/O expansion module.

Power module (optional) views

Power module—Front

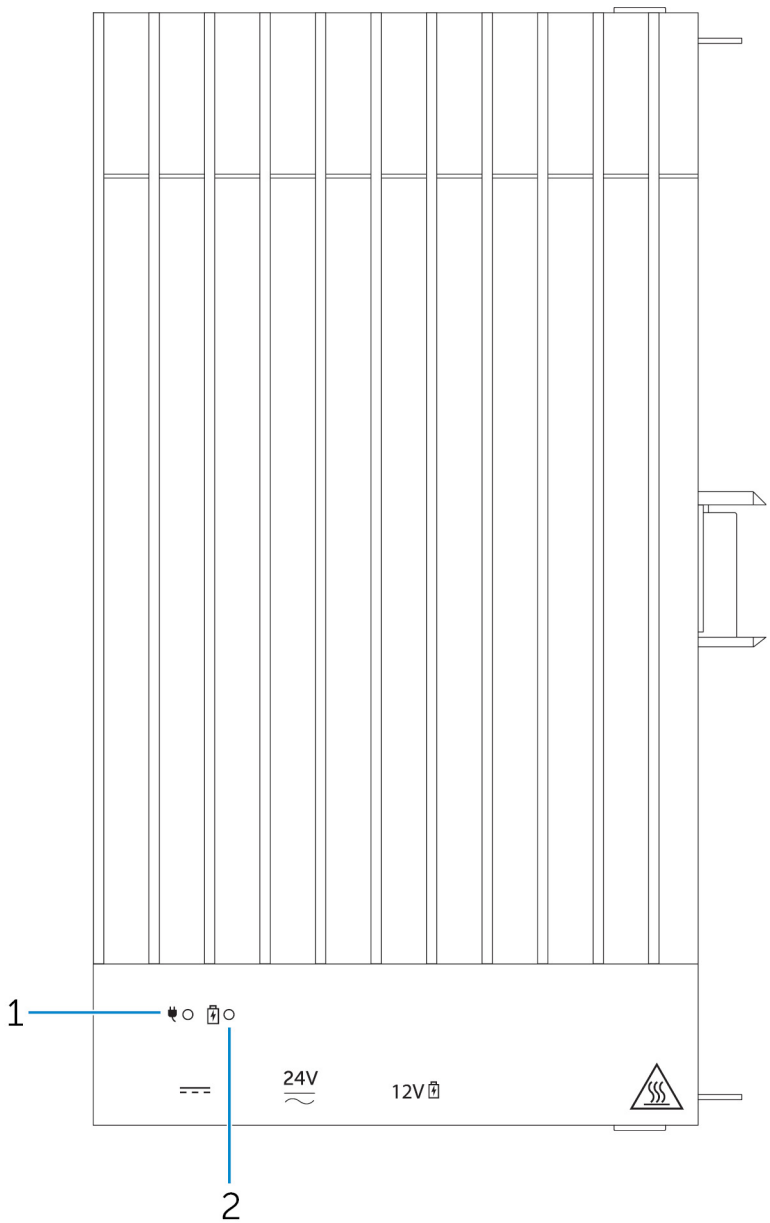

Features		
1	Power status LED	Indicates the power-state of the power module and the Edge Gateway.
2	Battery status LED	Indicates the power-state of the attached battery.

Power module—Bottom

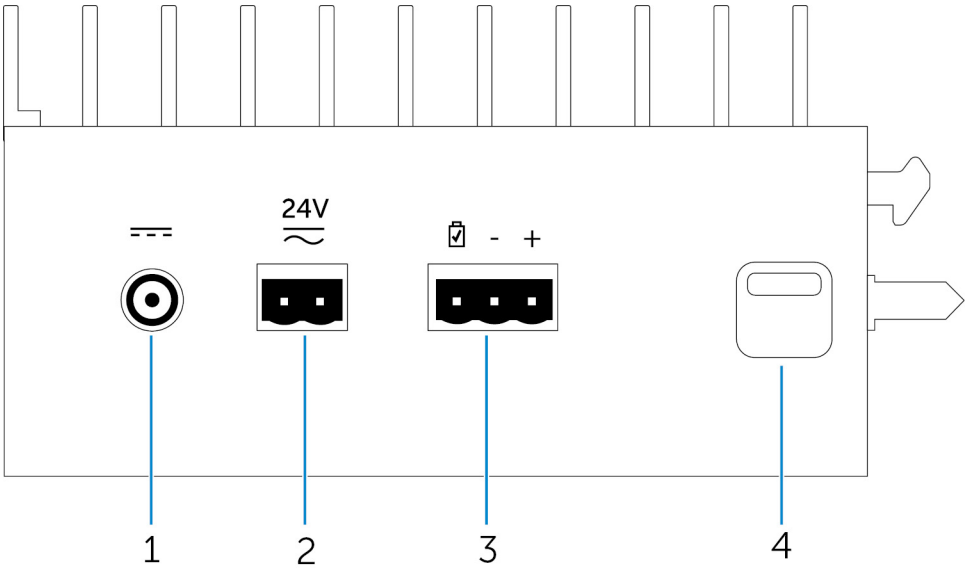

Features		
1	19.5 V DC power adapter port	Connect a 19.5 V DC power adapter to provide power to your Edge Gateway.
2	24 V AC/DC power port	Connect a 24 V AC/DC power source to power your Edge Gateway.
3	Sealed lead-acid battery port	Connect an external battery to the power module to provide back-up power in case of power interruption.
4	Bottom release-latch	Push both the top and bottom release-latches to disconnect the power module from the Edge Gateway.

19.5 V DC power adapter port

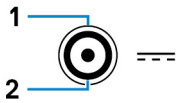

Pin	Polarity
1	DC Negative
2	DC Positive
Manufacturer part number	SINGATRON 2DC-S060-029F http://www.singatron.com/ **NOTE: This part number is for reference only and is subjected to change.**

24 V AC/DC power port

Pin	Polarity
1	AC/DC-IN
2	Positive/Negative
Manufacturer part number	Molex 39530-0502 https://www.molex.com/ **NOTE: This part number is for reference only and is subjected to change.**

Sealed lead-acid battery port

Pin	Polarity
1	Battery status
2	Negative
3	Positive
Manufacturer part number	Molex 39530-0503 https://www.molex.com/ **NOTE: This part number is for reference only and is subjected to change.**

Power module—Top

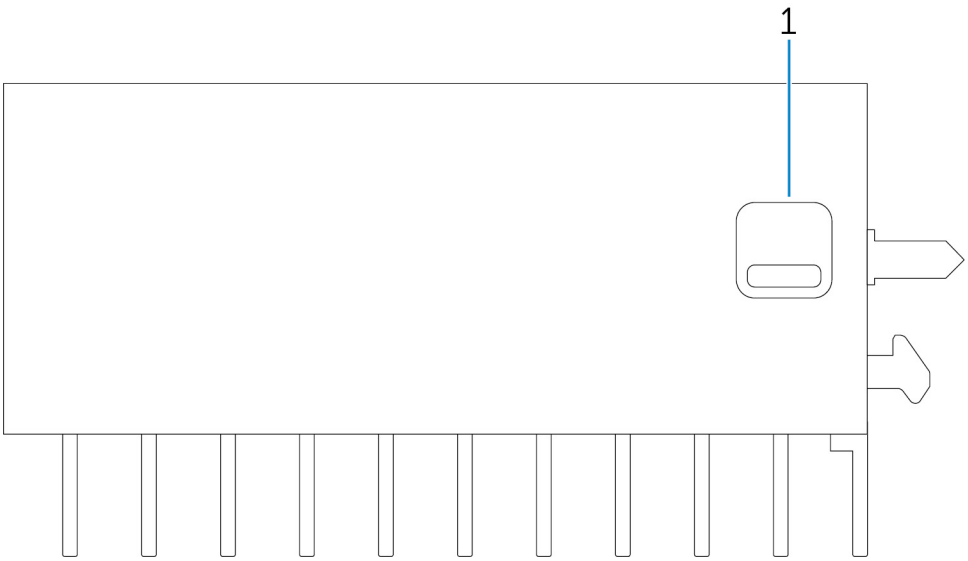

Features		
1	Top release latch	Push both the top and bottom release latches to disconnect the power module from the Edge Gateway.

Power module—Right

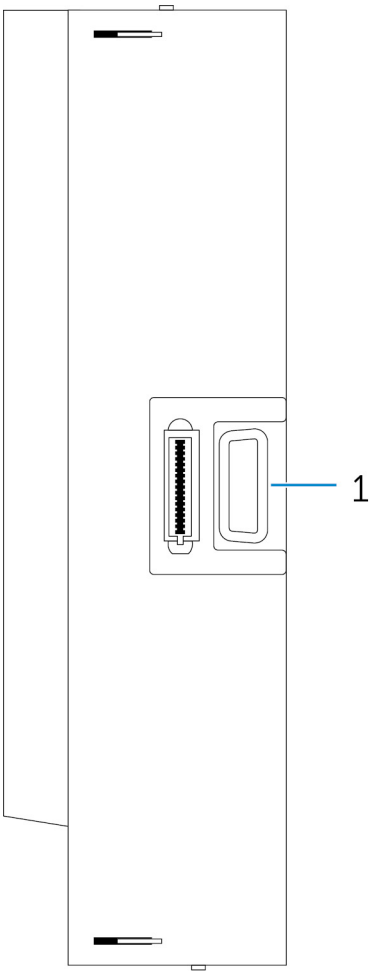

Features		
1	Edge Gateway expansion port	Connect the power module to the Edge Gateway for increased power options and to power the IO expansion module.

Setting up the power module

WARNING: Before installing the power module, shut down the Edge Gateway and disconnect the power cable.

NOTE: To enable and use the IO expansion module, you must also install the power module.

1. Attach either wall-mount brackets or a DIN rail mounts to the power module as needed.
2. Remove the screw and the dust-cap covering the power module expansion port on the Edge Gateway connector.

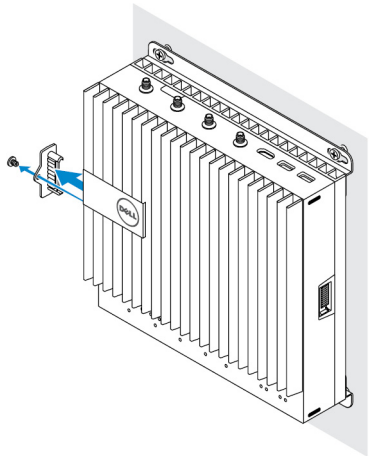

3. Align the power module guide pins to the power module port on the Edge Gateway and slide the power module until fully seated.

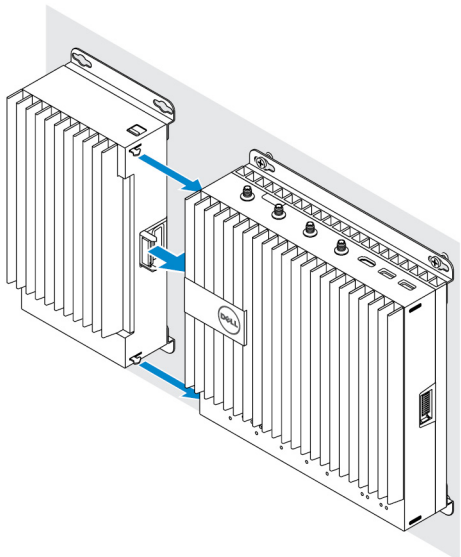

4. Ensure the top and bottom latches are locked to secure the module to the Edge Gateway.

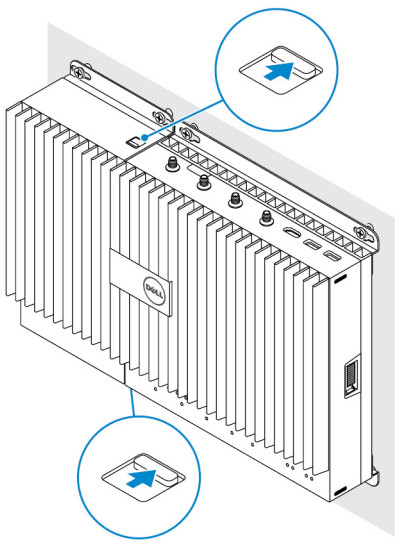

5. Secure the power module to the wall or to the DIN rail.

Wall mount bracket

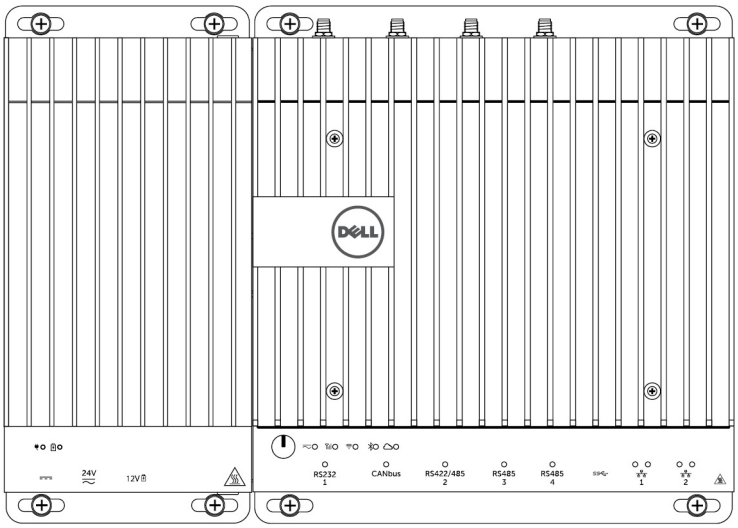

DIN rail

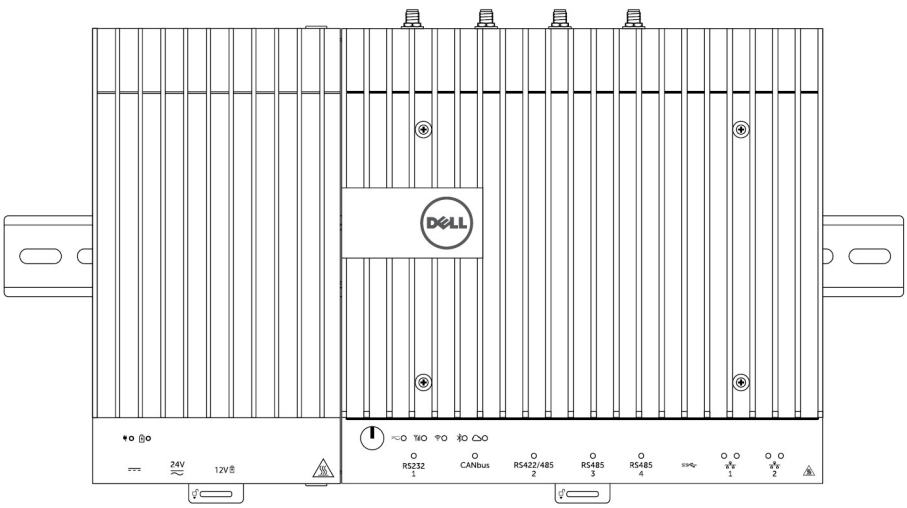

6. Connect the power sources and press the power button on the Edge Gateway.

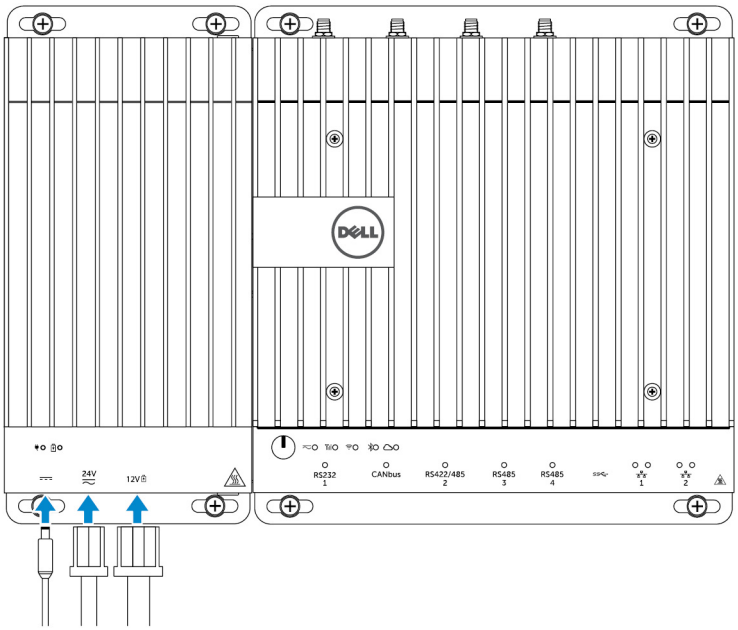

NOTE: You can connect the power cable to the 24V AC/DC, 19 VDC, and a battery simultaneously.

NOTE: The power adapter and sealed lead-acid battery are sold separately.

NOTE: Installing the battery is optional. Dell recommends that you connect a sealed 12V lead-acid battery to the power module.

NOTE: The 12V lead-acid battery is not sold by Dell.

Specifications - Power Module

Dimensions	
Height	117.80 mm (4.64 inches)
Width	216 mm (8.50 inches)
Depth	64.20 mm (2.53 inches)

Power requirements	
Terminal block connector input voltage/current	24 VAC (50 Hz–60 Hz) or 24 VDC / 15A
Power adapter input voltage/current	19.5 VDC / 6.67A
Battery connector port	12VDC / 15A

Environmental requirements	
Ingress Protection Rating	IP50
Temperature range:	
Operating (with a maximum temperature gradation of 15°C per hour)	• -30°C to 70°C (-22°F to 158°F) when connected to a 24V AC/DC power source. • -30°C to 40°C (-22°F to 104°F) when connected to a power adapter or battery.

Environmental requirements	
	NOTE: The maximum operating temperature is derated 1°C/305m(1000ft) above sea level altitude.
Non-operating	-40°C to 70 °C (-40°F to 158°F)
Relative humidity (maximum):	
Operating (with maximum humidity gradation of 10% per hour)	10% to 90% (non-condensing)
Non-operating ((with maximum humidity gradation of 10% per hour)	5% to 95% (non-condensing)
Altitude (maximum, unpressurized):	
Operating	-15.2m to 5000m (-50ft to 16,404ft)
	NOTE: The maximum operating temperature is derated 1°C/305m (1000ft) above sea level altitude.
Storage	-15.20 m to 10,668 m (-50 ft to 35,000 ft)

8

Enclosure Overview

The rugged enclosure allows you to install the Dell Edge Gateway in harsh environment's, like locations that are subjected to high temperature variation, dust particle, and humidity.

Enclosure (optional) view

Enclosure - Side

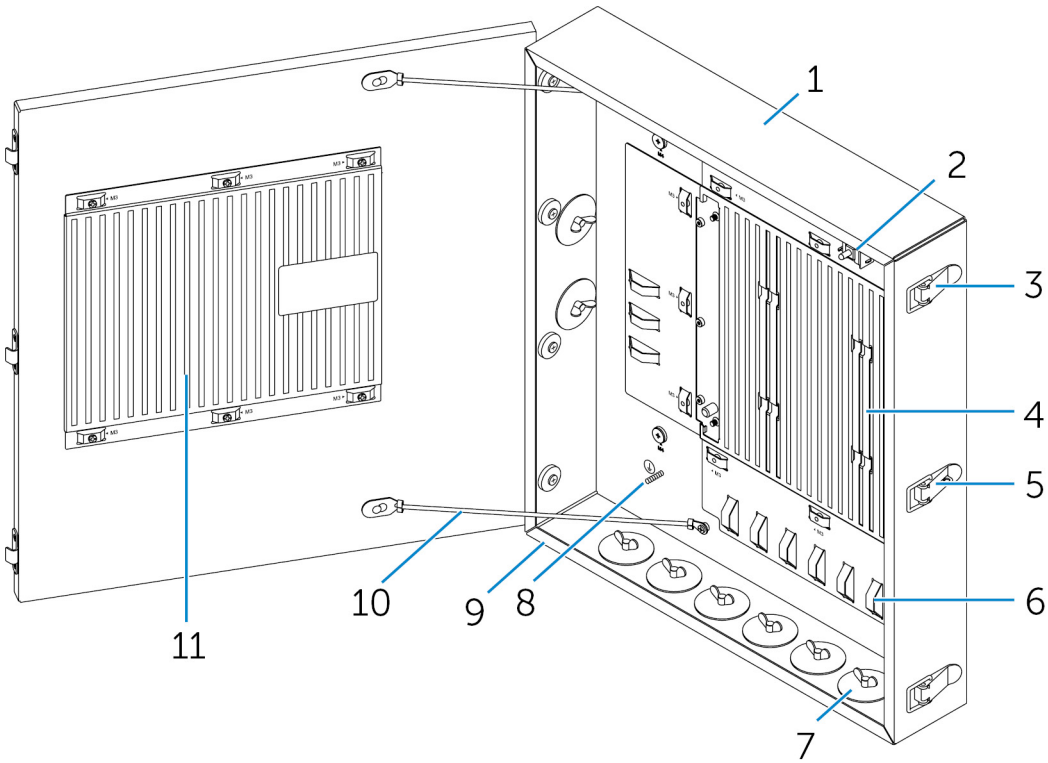

Features		
1	Rugged enclosure	Install the Edge Gateway in the rugged enclosure when using in harsh environments condition.
2	Intrusion detection switch	Detects unauthorized system access.
3	Door securing latch (3)	Secure the enclosure.
4	Thermal ribs	Dissipates the heat generated by the system.
5	Latch lock-out	Secure the system with a padlock.
6	Cable tie-off (17)	To prevent accidental cable disconnection, tie all cables to the cable tie-off guides.

Features		
7	Cable conduit openings (8)	Route the cables through the conduits (1 inch and 0.75 inch diameter).
8	Primary ground (internal)	Connect the grounding cable to the system.
9	Primary ground (external)	Connect the grounding cable to the system.
10	Door-stop cables (2)	Restricts the door from opening.
11	Door thermal ribs	Dissipates the heat generated by the system.

Setting up the enclosure

1. Install the enclosure's wall-mount bracket at a desired location and secure it to the wall using the wall-mount screws.

   NOTE: Ensure that the notch on the bracket is on the top.

   NOTE: The wall-mount screws are not included with the enclosure.

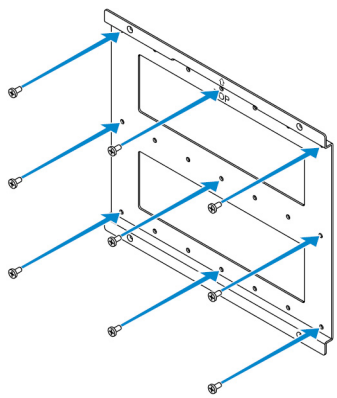

2. Open the enclosure.

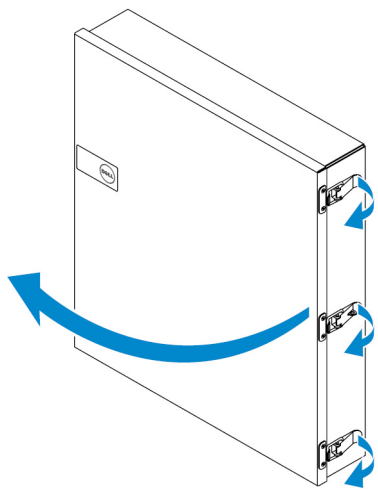

3. Place the enclosure on the wall-mount bracket, and align the tab on the back of the enclosure so that it fits into the notch on the wall bracket.

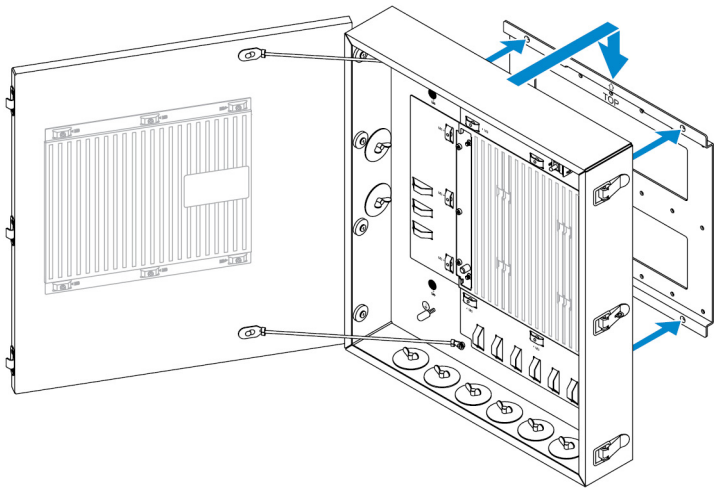

4. Secure the enclosure to the wall bracket by using the rubber washers and screws.

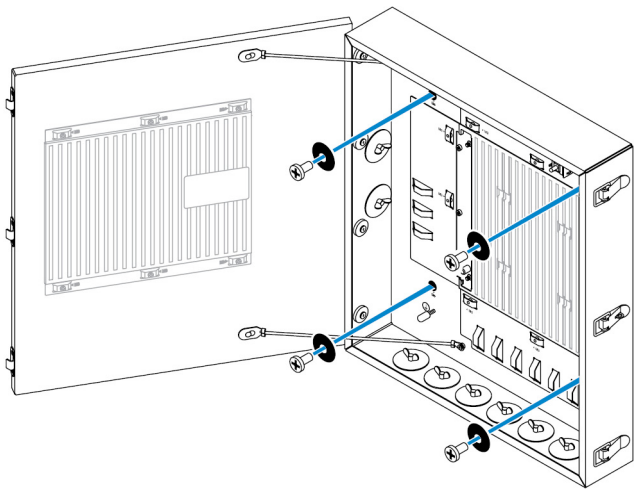

5. Secure the enclosure mounting brackets to the Edge Gateway by using the screws.

NOTE: Before attaching the brackets to the Edge Gateway, note the correct orientation of the brackets.

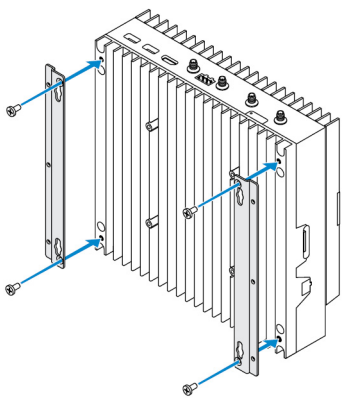

6. Position the Edge Gateway onto the enclosure's two locator pins, and then place and tighten the screws to secure the Edge Gateway to the enclosure.

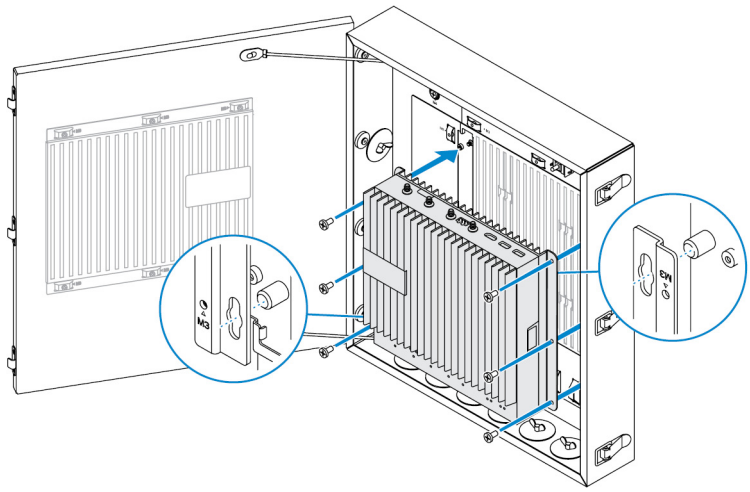

7. Connect the intrusion switch to the system.

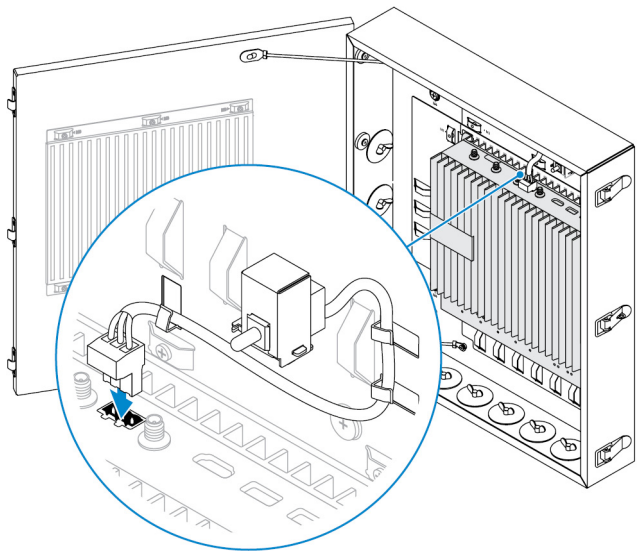

8. Remove the desired conduit plugs on the bottom or the left side of the enclosure and install the wiring conduits.

NOTE: To ensure that dust and water does not enter the enclosure, install a conduit rated as IP65.

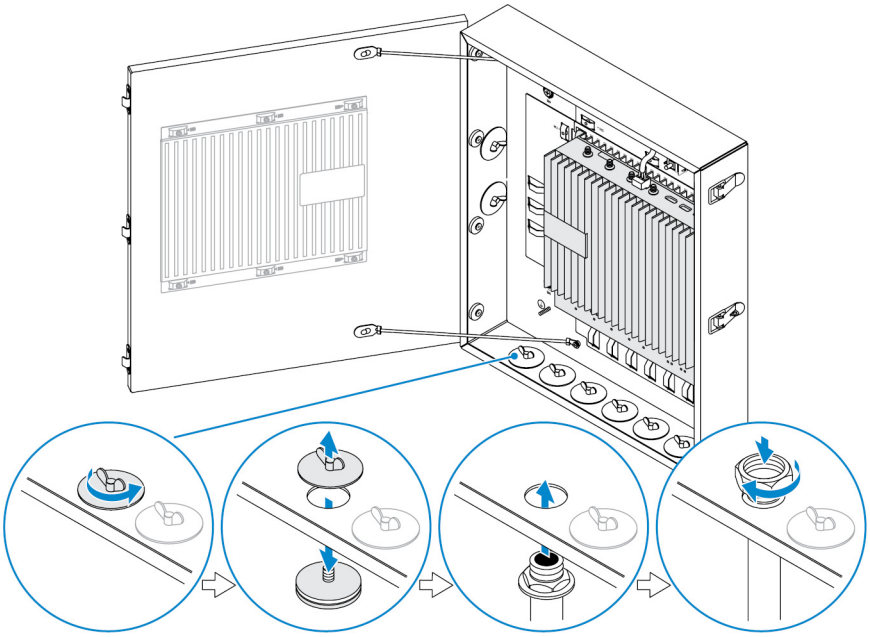

9. Route the cables through the conduits and connect the cables to the desired connectors.

NOTE: To reduce the risk of accidental cable disconnection, tie all cables to the cable tie-off guides.

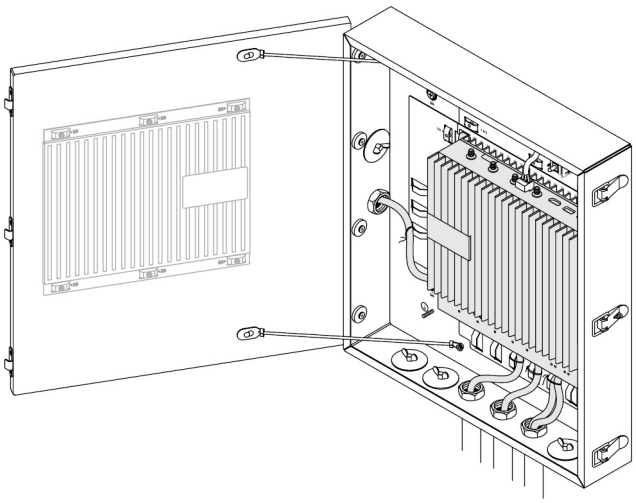

10. Close and securely latch the enclosure door.

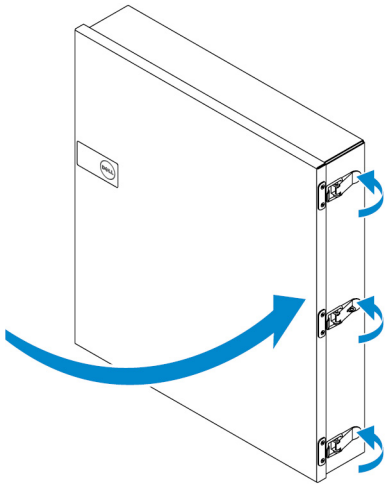

9

Setting up the Zigbee dongle

NOTE: Only Zigbee dongles purchased from Dell work with the Edge Gateway.

CAUTION: Do not connect the Zigbee dongle if the Edge Gateway is installed inside the enclosure.

NOTE: Do not connect the Zigbee dongle to the internal USB port of the IO expansion module.

1. Shut down your Edge Gateway.
2. Connect the Zigbee dongle to any external USB port on your Edge Gateway.

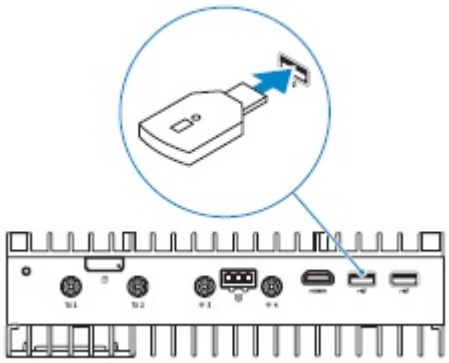

or

Connect the Zigbee dongle to any external USB port on the IO module.

NOTE: Do not connect the Zigbee dongle to the internal USB port of the IO expansion module.

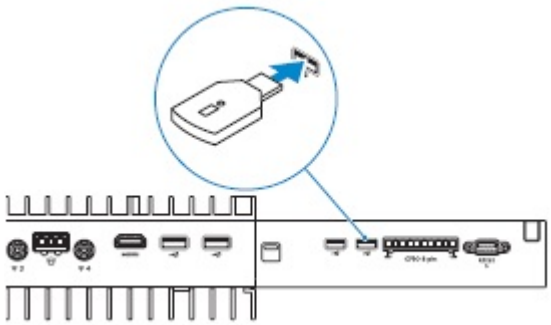

3. Turn on the Edge Gateway and complete the setup.

NOTE: The Zigbee hardware is in a USB dongle, however, it will not function like a Plug and Play application. You will not see messages appearing on your screen, stating that Zigbee was found. For more information about firmware or application development, contact Silicon Labs.

NOTE: To find application notes and reference manuals for your dongle, search for the model number ETRX358USB at https://www.silabs.com

10

BIOS defaults

General

These settings are set at the factory and are not configurable.

System configuration

	5000	5100
Integrated NIC	Enabled w/PXE	Enabled w/PXE
Integrated NIC 2	Disabled	Disabled
Serial port	Enabled	Enabled
I/O Module	Enabled	Enabled
SATA Operation	AHCI	AHCI
Drives	Enabled (SSD-1)	Enabled (SSD-1)
SMART Reporting	Disabled	Disabled
USB Configuration	Enabled (Boot support, front USB ports, rear USB ports)	Enabled (Boot support, front USB ports, rear USB ports)
Miscellaneous Devices	Enabled (WWAN, WLAN, Bluetooth, CANBus)	Enabled (WWAN, WLAN, Bluetooth, CANBus)
Power Button	Disabled	Disabled
Watchdog Timer Support	Disabled	Disabled

Security

	5000	5100
Admin Password	Not set	Not set
System Password	Not set	Not set
Internal HDD password	Not set	Not set
Strong Password	Disabled	Disabled
Password Configuration	4~32 character length	4~32 character length

	5000	5100
Password Bypass	Disabled	Disabled
Password Change	Enabled	Enabled
TPM 1.2 Security	Enabled	Enabled
	Disabled (PPI Bypass for Enable Commands, PPI Bypass for Disable Commands, Clear)	Disabled (PPI Bypass for Enable Commands, PPI Bypass for Disable Commands, Clear)
TPM 2.0 Security	Enabled	Enabled
	Disabled (PPI Bypass for Enable Commands, PPI Bypass for Disable Commands, Attestation Enable, Key Storage Enable, SHA-256, Clear)	Disabled (PPI Bypass for Enable Commands, PPI Bypass for Disable Commands, Attestation Enable, Key Storage Enable, SHA-256, Clear)
Chassis Intrusion	Disabled	Disabled
CPU XD Support	Enabled	Enabled
OROM Keyboard Access	Enabled	Enabled
Admin Setup Lockout	Disabled	Disabled

Secure Boot

	5000	5100
Secure Boot Enable	Disabled	Disabled
Expert Key Management	Disabled	Disabled

Performance

	5000	5100
Intel SpeedStep	Enabled	Enabled
C-States Control	Enabled	Enabled
Limit CPUID Value	Disabled	Disabled

Power Management

	5000	5100
AC Recovery (Desktop)	Power off	Power off
Auto On Time	Disabled	Disabled
Wake on LAN/WLAN	Disabled: Turns the system on from hibernation (S4) and power off (S5) state	Disabled: Turns the system on from hibernation (S4) and power off (S5) state

NOTE: With USB wake support from power off (S5), a wired keyboard or mouse is able to wake the system if connected to the designated USB port (marked with the Smart Power On icon). For wireless keyboard and mice, if both devices share the same USB dongle and the dongle is inserted into the designated USB port, both keyboard and mouse can wake the system. For wireless keyboard only or mouse only, either can wake the system as long as the dongle is inserted into the designated USB port.

POST Behavior

	5000	5100
Keyboard Errors	Enabled	Enabled
Fastboot	Thorough	Thorough
Numlock LED	Enabled	Enabled
Extend BIOS POST Time	0 seconds	0 seconds
Warnings and Errors	Prompt on Warnings and Errors	Prompt on Warnings and Errors

Maintenance

	5000	5100
Service tag	Set by the factory	Set by the factory
Asset tag	Optional user entry	Optional user entry
SERR message	Enabled	Enabled
BIOS Downgrade	Enabled	Enabled
Data Wipe	Disabled	Disabled
BIOS Recovery	Enabled	Enabled

11

Other documents you may need

Besides this *Installation and Operations Manual*, you may need to see the following guides available at **https://www.dell.com/support/manuals**.

- *Dell Edge Device Manager Getting Started Guide*
- *Dell SupportAssist For Dell OpenManage Essentials Quick Start Guide*
- *Dell Command | Monitor User's Guide*

Additionally, for more information on using **Dell Data Protection | Encryption** see the documentation for the software at **https://www.dell.com/support/manuals**.

12

Contacting Dell

To contact Dell for sales, technical assistance, or customer service issues:

1. Go to www.dell.com/contactdell.
2. Verify your country or region in the drop-down list at the bottom of the page.
3. Select the appropriate service or support link based on your requirement or choose the method of contacting Dell that is convenient for you.

   Dell provides several online and telephone-based support and service options. Availability varies by country and product, and some services may not be available in your area.

   NOTE: If you do not have an active internet connection, you can find the contact information on your purchase invoice, packing slip, bill, or Dell product catalog.

Regulatory and environmental compliance

Product-related conformity assessment and regulatory authorizations including Product Safety, Electromagnetic Compatibility (EMC), Ergonomics, and Communication Devices relevant to this product, as well as the Data Sheet for this product, are available at dell.com/regulatory_compliance.

Details of Dell's environmental stewardship program to conserve product energy consumption, reduce or eliminate materials for disposal, prolong product life span and provide effective and convenient equipment recovery solutions may be viewed at www.dell.com/environment. Product-related conformity assessment, regulatory authorizations, and information encompassing Environmental, Energy Consumption, Noise Emissions, Product Materials Information, Packaging, Batteries, and Recycling relevant to this product may be viewed by clicking the Design for Environment link on the webpage.