User Manual

WISE-4470 Series

ADVANTECH

Enabling an Intelligent Planet

Copyright

The documentation and the software included with this product are copyrighted 2018 by Advantech Co., Ltd. All rights are reserved. Advantech Co., Ltd. reserves the right to make improvements in the products described in this manual at any time without notice. No part of this manual may be reproduced, copied, translated or transmitted in any form or by any means without the prior written permission of Advantech Co., Ltd. Information provided in this manual is intended to be accurate and reliable. However, Advantech Co., Ltd. assumes no responsibility for its use, nor for any infringements of the rights of third parties, which may result from its use.

Acknowledgements

Intel and Pentium are trademarks of Intel Corporation.

Microsoft Windows and MS-DOS are registered trademarks of Microsoft Corp.

All other product names or trademarks are properties of their respective owners.

Product Warranty (2 years)

Advantech warrants to you, the original purchaser, that each of its products will be free from defects in materials and workmanship for two years from the date of purchase.

This warranty does not apply to any products which have been repaired or altered by persons other than repair personnel authorized by Advantech, or which have been subject to misuse, abuse, accident or improper installation. Advantech assumes no liability under the terms of this warranty as a consequence of such events.

Because of Advantech's high quality-control standards and rigorous testing, most of our customers never need to use our repair service. If an Advantech product is defective, it will be repaired or replaced at no charge during the warranty period. For out-of-warranty repairs, you will be billed according to the cost of replacement materials, service time and freight. Please consult your dealer for more details.

If you think you have a defective product, follow these steps:

1. Collect all the information about the problem encountered. (For example, CPU speed, Advantech products used, other hardware and software used, etc.) Note anything abnormal and list any onscreen messages you get when the problem occurs.
2. Call your dealer and describe the problem. Please have your manual, product, and any helpful information readily available.
3. If your product is diagnosed as defective, obtain an RMA (return merchandize authorization) number from your dealer. This allows us to process your return more quickly.
4. Carefully pack the defective product, a fully-completed Repair and Replacement Order Card and a photocopy proof of purchase date (such as your sales receipt) in a shippable container. A product returned without proof of the purchase date is not eligible for warranty service.
5. Write the RMA number visibly on the outside of the package and ship it prepaid to your dealer.

Part No. 2003447020 Edition 1

Printed in Taiwan October 2018

Declaration of Conformity

CE

This product has passed the CE test for environmental specifications. Test conditions for passing included the equipment being operated within an industrial enclosure. In order to protect the product from being damaged by ESD (Electrostatic Discharge) and EMI leakage, we strongly recommend the use of CE-compliant industrial enclosure products.

FCC Class A

Note: This equipment has been tested and found to comply with the limits for a Class A digital device, pursuant to part 15 of the FCC Rules. These limits are designed to provide reasonable protection against harmful interference when the equipment is operated in a commercial environment. This equipment generates, uses, and can radiate radio frequency energy and, if not installed and used in accordance with the instruction manual, may cause harmful interference to radio communications. Operation of this equipment in a residential area is likely to cause harmful interference in which case the user will be required to correct the interference at his own expense.

Technical Support and Assistance

1. Visit the Advantech web site at www.advantech.com/support where you can find the latest information about the product.
2. Contact your distributor, sales representative, or Advantech's customer service center for technical support if you need additional assistance. Please have the following information ready before you call:
   - Product name and serial number
   - Description of your peripheral attachments
   - Description of your software (operating system, version, application software, etc.)
   - A complete description of the problem
   - The exact wording of any error messages

Warnings, Cautions and Notes

Warning! *Warnings indicate conditions, which if not observed, can cause personal injury!*

Caution! *Cautions are included to help you avoid damaging hardware or losing data. e.g.There is a danger of a new battery exploding if it is incorrectly installed. Do not attempt to recharge, force open, or heat the battery. Replace the battery only with the same or equivalent type recommended by the manufacturer. Discard used batteries according to the manufacturer's instructions.*

Note! *Notes provide optional additional information.*

Document Feedback

To assist us in making improvements to this manual, we would welcome comments and constructive criticism. Please send all such - in writing to: support@advantech.com

Package List

Before setting up the system, check that the items listed below are included and in good condition. If any item does not accord with the table, please contact your dealer immediately.

- WISE-4470-S250 module x 1
- Mounting bracket x 1
- Quick startup manual x 1
- China RoHS declare x 1

Safety Instructions

1. Read these safety instructions carefully.
2. Keep this User Manual for later reference.
3. Disconnect this equipment from any AC outlet before cleaning. Use a damp cloth. Do not use liquid or spray detergents for cleaning.
4. For plug-in equipment, the power outlet socket must be located near the equipment and must be easily accessible.
5. Keep this equipment away from humidity.
6. Put this equipment on a reliable surface during installation. Dropping it or letting it fall may cause damage.
7. The openings on the enclosure are for air convection. Protect the equipment from overheating. DO NOT COVER THE OPENINGS.
8. Make sure the voltage of the power source is correct before connecting the equipment to the power outlet.
9. Position the power cord so that people cannot step on it. Do not place anything over the power cord.
10. All cautions and warnings on the equipment should be noted.
11. If the equipment is not used for a long time, disconnect it from the power source to avoid damage by transient overvoltage.
12. Never pour any liquid into an opening. This may cause fire or electrical shock.
13. Never open the equipment. For safety reasons, the equipment should be opened only by qualified service personnel.
14. If one of the following situations arises, get the equipment checked by service personnel:
15. The power cord or plug is damaged.
16. Liquid has penetrated into the equipment.
17. The equipment has been exposed to moisture.
18. The equipment does not work well, or you cannot get it to work according to the user's manual.
19. The equipment has been dropped and damaged.
20. The equipment has obvious signs of breakage.
21. DO NOT LEAVE THIS EQUIPMENT IN AN ENVIRONMENT WHERE THE STORAGE TEMPERATURE MAY GO BELOW -20° C (-4° F) OR ABOVE 60° C (140° F). THIS COULD DAMAGE THE EQUIPMENT. THE EQUIPMENT SHOULD BE IN A CONTROLLED ENVIRONMENT.
22. CAUTION: DANGER OF EXPLOSION IF BATTERY IS INCORRECTLY REPLACED. REPLACE ONLY WITH THE SAME OR EQUIVALENT TYPE RECOMMENDED BY THE MANUFACTURER, DISCARD USED BATTERIES ACCORDING TO THE MANUFACTURER'S INSTRUCTIONS.
23. The sound pressure level at the operator's position according to IEC 704-1:1982 is no more than 70 dB (A).

DISCLAIMER: This set of instructions is given according to IEC 704-1. Advantech disclaims all responsibility for the accuracy of any statements contained herein.

Safety Precaution - Static Electricity

Follow these simple precautions to protect yourself from harm and the products from damage.

- To avoid electrical shock, always disconnect the power from your PC chassis before you work on it. Don't touch any components on the CPU card or other cards while the PC is on.
- Disconnect power before making any configuration changes. The sudden rush of power as you connect a jumper or install a card may damage sensitive electronic components.

Contents

Chapter 1 Product Overview 1

1.1 Series Family and Specifications 2
1.2 Mechanical Design and Dimensions 2
1.3 LED Definition 2
1.4 Package Information 2

Chapter 2 Product Overview 3

2.1 General Specifications 4
2.1.1 Cellular Interface 4
2.1.2 Configuration Interface 4
2.1.3 General 4
2.1.4 Power 5
2.1.5 Software 5
2.2 I/O Specifications 5
2.2.1 Digital Inputs 5
2.2.2 Digital Outputs 5
2.2.3 RS-485 Port 5
2.3 Application Wiring 6
Figure 2.1 WISE-4470-S250 Digital Output Wiring Diagram 6
Figure 2.2 WISE-4470-S250 Digital Input Wiring Diagram 6
Figure 2.3 WISE-4470-S250 RS-485 Wiring Diagram 7
2.4 Pin Assignment 7
Figure 2.4 Pin Assignment 7
2.5 Block Diagram 8
Figure 2.5 WISE-4470-S250 Block Diagram 8

Chapter 3 Hardware Installation 9

3.1 Interface Introduction 10
Figure 3.1 WISE-4470 Interface Introduction 10
3.2 Mounting 10
Figure 3.2 WISE-4000 Series Mounting Kit Dimensions 10
3.2.1 DIN-Rail Mounting 11
Figure 3.3 WISE-4470 DIN-rail Mounting Installation 11
Figure 3.4 WISE-4470 DIN-rail Mounting (front) 11
Figure 3.5 WISE-4470 DIN-rail Mounting (back) 12
3.2.2 Wall Mounting 12
Figure 3.6 WISE-4470 Wall Mounting Installation 12
Figure 3.7 WISE-4470 Wall Mounting 13
3.2.3 Pole Mounting 13
Figure 3.8 WISE-4470 Pole Mounting Installation 13
Figure 3.9 WISE-4470 Pole Mounting 14
3.3 Wiring & Connections 14
3.3.1 Power Supply Wiring 14
Figure 3.10 WISE-4470-S250 Power Wiring 14
3.3.2 I/O Units 15

Chapter 4 System Configuration 17

4.1 Connection 18
4.2 Configuring WISE-4470 Using WISE Studio 18

4.2.1 Minimum System Requirements 18
4.2.2 Installing WISE Studio 18
4.2.3 A Brief Introduction to WISE Studio 19
4.2.4 Information Page 20
4.2.5 Connecting to a Cellular Network 22
4.2.6 I/O Status Configuration 23
4.2.7 System Configuration 33
4.2.8 Access Control 36
4.2.9 Data Logger 36
4.2.10 Diagnostician 39
4.2.11 Private Server 39
4.2.12 Push Notification 41

Appendix A SMS Functions 43

A.1 SMS Configuration 44
A.2 Access Control for SMS Command 45
A.3 Message Types & Format 45
A.3.1 Control Message 45
A.3.2 Push Message 47
Table A.1: Parameter 47
Table A.2: Push Message Code List 48

Appendix B iSensing MQTT 51

B.1 iSensing MQTT Format for publishing 53
B.1.1 Topic Format: Advantech/MAC_Address/data 53
B.1.2 Payload Format 53
B.1.3 Example 54
B.2 iSensing MQTT Format for subscribing 56
B.2.1 Topic Format: Advantech/MAC_Address/ctl/doIndex 56
B.2.2 Payload Format 56
B.2.3 Example 57

Chapter 1

Product Overview

1.1 Series Family and Specifications

Function	Model	Description
Wireless Sensor Node	WISE-4470-S250	Cellular IoT WSN with 6 digital inputs, 2 digital outputs, and 1-port RS-485

1.2 Mechanical Design and Dimensions

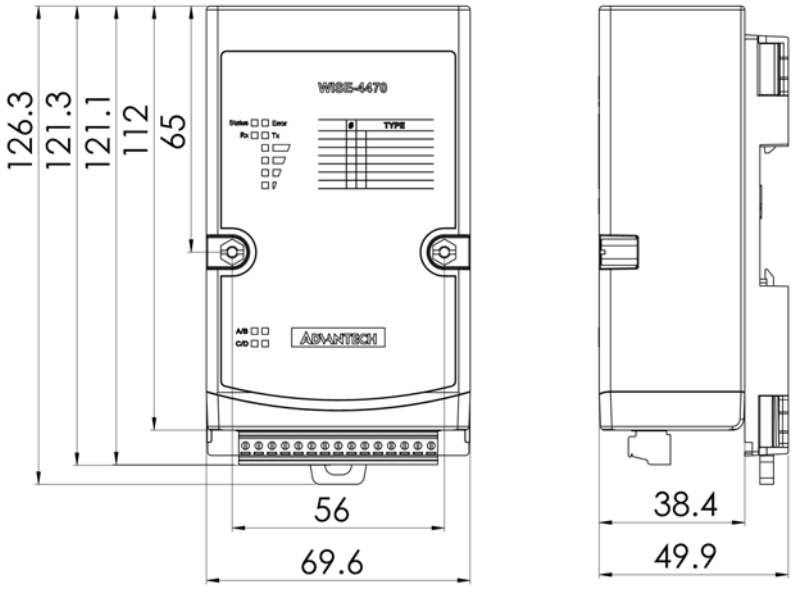

1.3 LED Definition

LED	Color	Indication	Behavior
Status	Green	Blink	2 Hz: Awaiting connection 0.5 Hz: Connected to network
Error	Red	Blink	2 Hz: SIM card or RF module error
Cellular Rx	Green	Blink	Receiving data via cellular network
Cellular Tx	Yellow	Blink	Sending data via cellular network
Signal Strength	Green	ON *4	Full signal
		ON *3	Good signal
		ON *2	Okay signal
		ON *1	Poor signal
		All OFF	No signal/access point module

1.4 Package Information

WISE-4470-S250

- 1 x WISE-4470-S250 module with internal antenna and terminal connector
- 1 x plastic wall-mounting bracket
- 1 x quick startup manual with China RoHS declaration

Chapter 2

Product Overview

2.1 General Specifications

2.1.1 Cellular Interface

- Standards: GSM/GPRS/HSPA
- Frequency band
  - GSM/GPRS/EDGE: 850, 900, 1800, 1900 MHz
  - UMTS/HSPA: 900, 2100 MHz

2.1.2 Configuration Interface

- Interface: USB virtual COM port
- Connector: Micro-B USB
- USB chipset: Silicon Labs CP210x
- Driver: CP210x USB to UART Bridge VCP Drivers

2.1.3 General

- I/O connector: 3.5-mm spacing plug-in screw terminal block
- Power connector: 3.5-mm spacing plug-in screw terminal block
- Watchdog timer (WDT)
- System: 1.6 s
- Communication
- Programmable (FSV)
- Real-time clock (RTC) accuracy: ±2 s/day
- Enclosure: PC
- Mounting: DIN 35 rail, wall, pole, and stack
- Dimensions (W x H x D): 69 x 112 x 38 mm
- Operation temperature: -25~70°C (-13~158°F)
- Storage temperature: -40~85°C (-40~185°F)
- Operating humidity: 20~95% RH (non-condensing)
- Storage humidity: 0~95% RH (non-condensing)

Note! *WISE-4470 modules can operate below 30% humidity. However, environments with low relative humidity are prone to problems with electrostatic discharge. Therefore, you should ensure that you take adequate precautions by using ground straps, anti-static floor coverings, or similar equipment whenever you handle this equipment, especially in low-humidity environments.*

Note! *Whether temperature and humidity can be measured will depend on the type of sensor being used.*

2.1.4 Power

- Power Input Voltage: External Power: 10 ~ 50 V_{DC}
- Power Consumption: 1.2 W @ 24 V_{DC}

2.1.5 Software

- Utility: WISE Studio
- Driver: USB to UART Bridge (https://www.silabs.com/products/development-tools/software/usb-to-uart-bridge-vcp-drivers)
- Supported protocols: TCP/IP, UDP, HTTP, HTTPS, DHCP
- Supports RESTful Web API .JSON format

2.2 I/O Specifications

2.2.1 Digital Inputs

- Channels: 6
- Logic level (dry contact)
  - 0: Open
  - 1: Close DI COM
- Supports 32-bit counter input function (maximum signal frequency, 3 kHz)
- Supports keep/discard counter value on power-off
- Supports frequency input function (maximum signal frequency, 3 kHz)
- Supports inverted digital input status

2.2.2 Digital Outputs

- Channels: 2
- Open collector to 30 V, 100 mA maximum for resistance load
- Inductive loads require an external diode to eliminate back-EMF when the digital output is OFF
- On resistance (RDS(ON)): 4Ω (max. @ 100 mA, 25°C)
- Supports 5-kHz pulse output
- Supports high-to-low and low-to-high delay output

2.2.3 RS-485 Port

- Number of Ports: 1
- Port Connector: 3.5mm spacing plug-in screw terminal block (shared with I/O and power)
- Baud Rate (bps): 1200, 2400, 4800, 9600, 19200, 38400, 57600, 115200
- Data Bits:7, 8
- Stop Bits: 1, 2
- Parity: None, Odd, Even
- Flow Control: Auto flow control
- Signals: DATA+ and DATA-
- Protection: 15 kV ESD
- Supported Protocol: Modbus/RTU (Total 32 address by max. 8 instructions)

2.3 Application Wiring

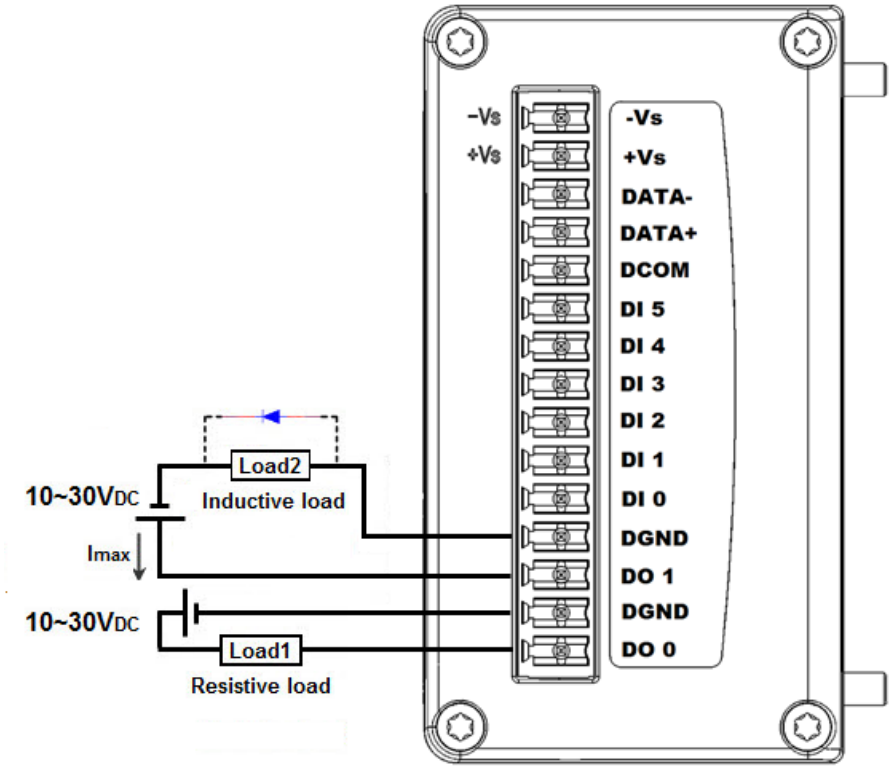

Figure 2.1 WISE-4470-S250 Digital Output Wiring Diagram

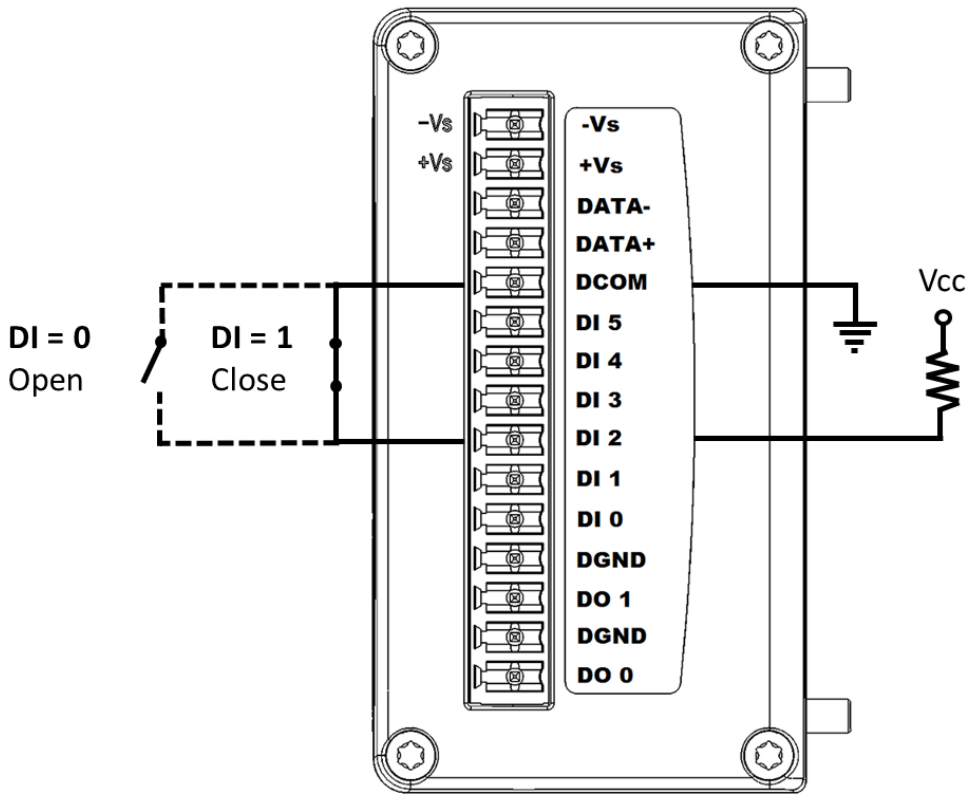

Figure 2.2 WISE-4470-S250 Digital Input Wiring Diagram

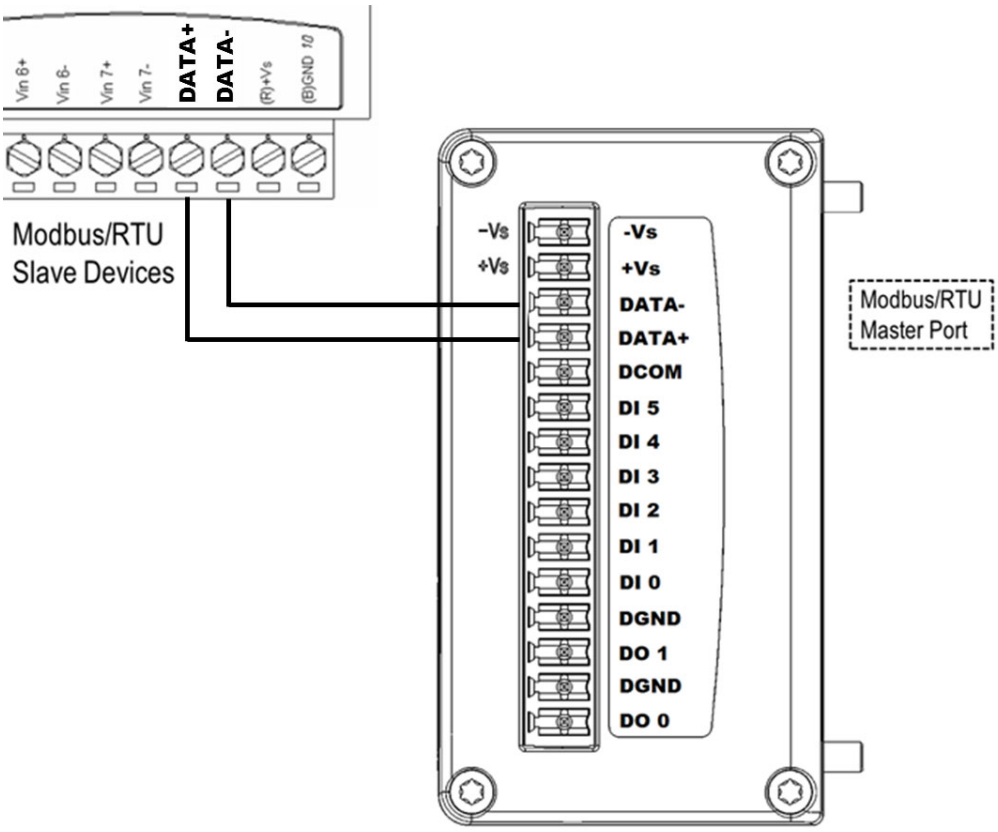

Figure 2.3 WISE-4470-S250 RS-485 Wiring Diagram

2.4 Pin Assignment

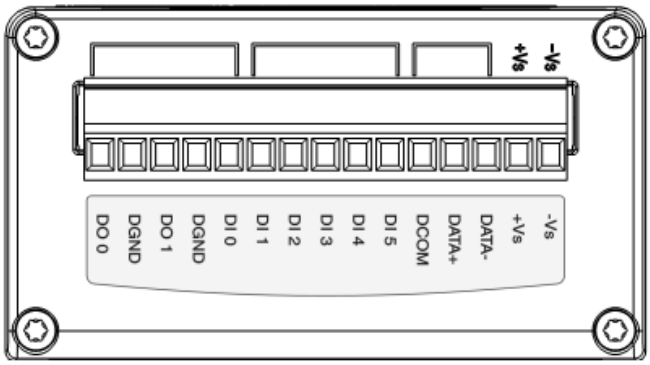

Figure 2.4 Pin Assignment

2.5 Block Diagram

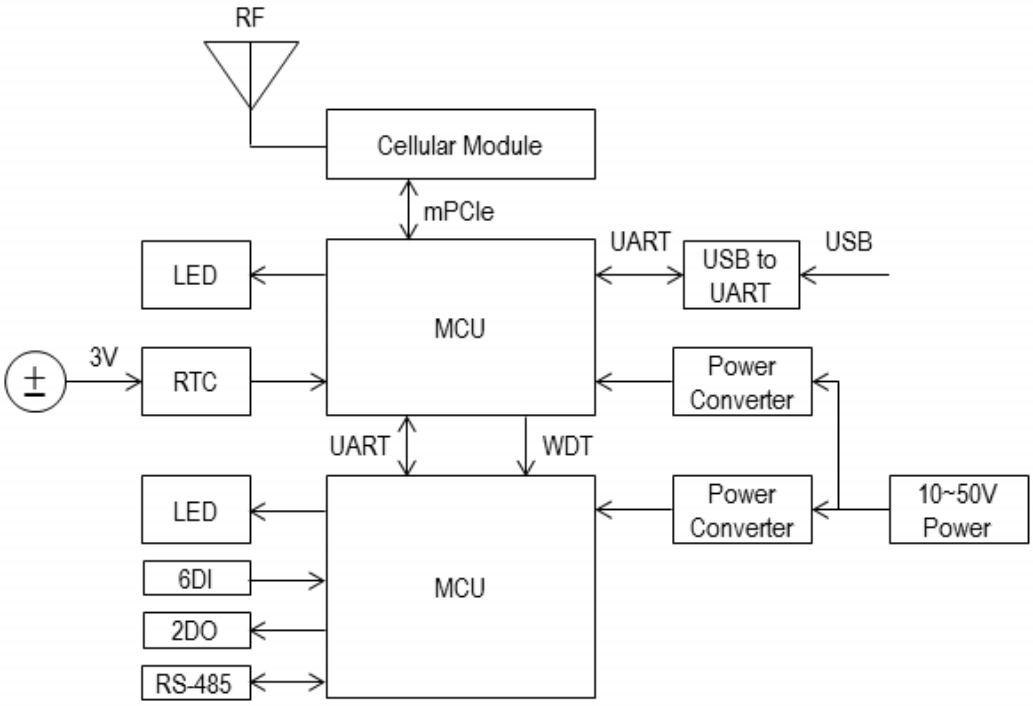

Figure 2.5 WISE-4470-S250 Block Diagram

Chapter 3

Hardware Installation

3.1 Interface Introduction

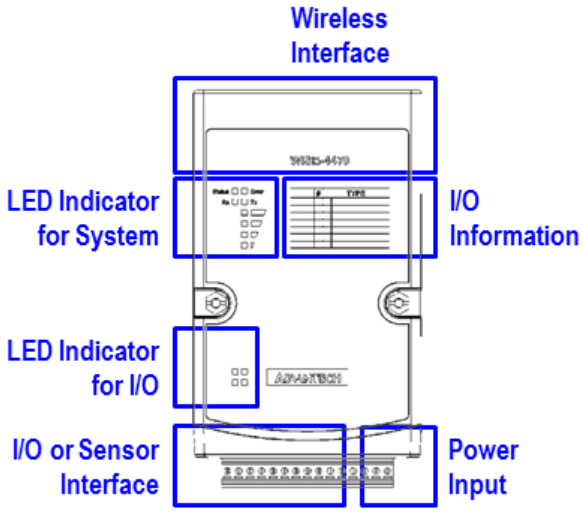

Figure 3.1 WISE-4470 Interface Introduction

3.2 Mounting

Like all WISE-4000 series modules, the WISE-4470 series of wireless sensor nodes are designed as compact units. Applicable installation methods are briefly described in the following sections.

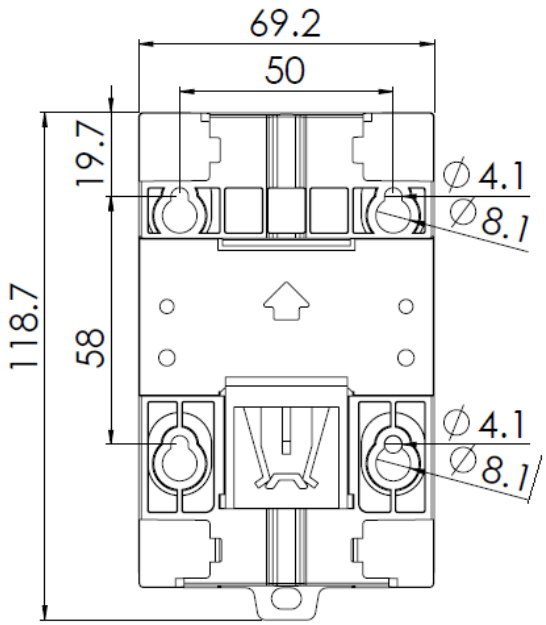

Figure 3.2 WISE-4000 Series Mounting Kit Dimensions

3.2.1 DIN-Rail Mounting

WISE-4470 modules can be fixed to a cabinet with mounting rails. Use a flathead screwdriver to fasten the DIN rail adapter to your module. You can then use the end brackets included in the package in order to keep it from sliding.

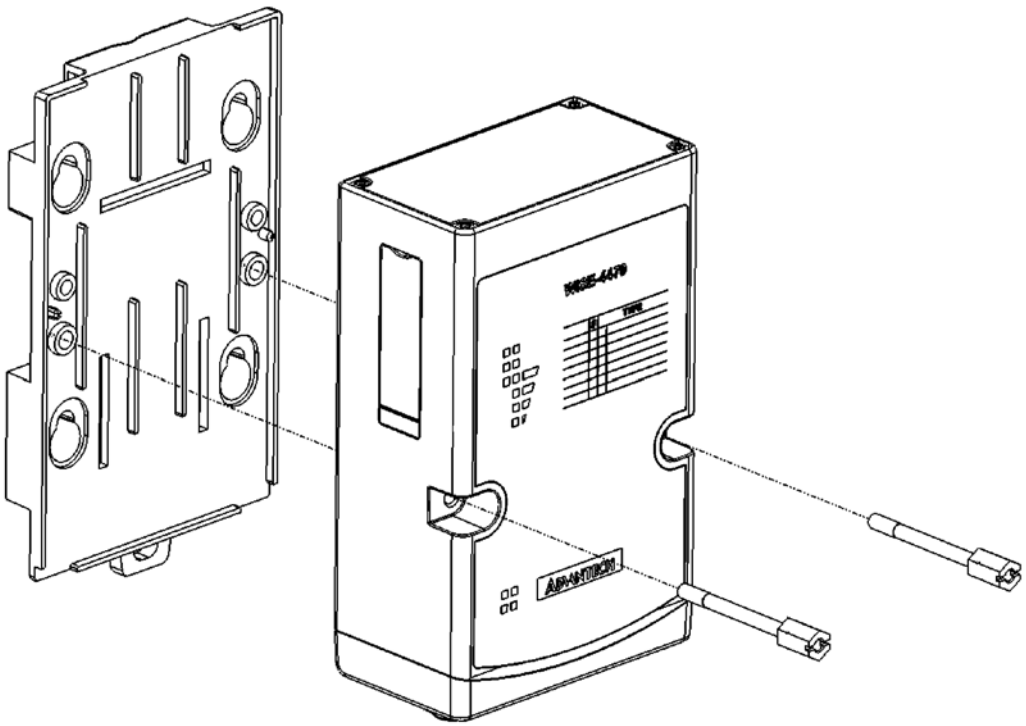

Figure 3.3 WISE-4470 DIN-rail Mounting Installation

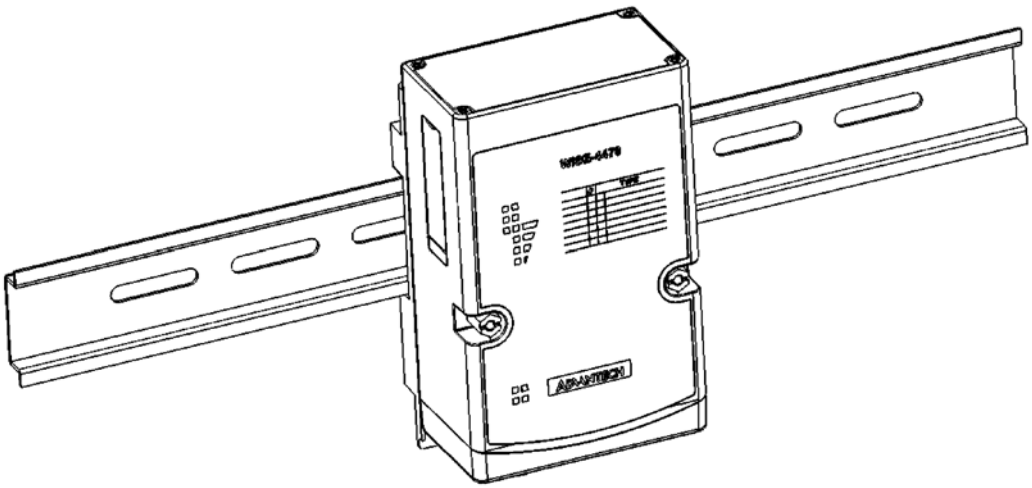

Figure 3.4 WISE-4470 DIN-rail Mounting (front)

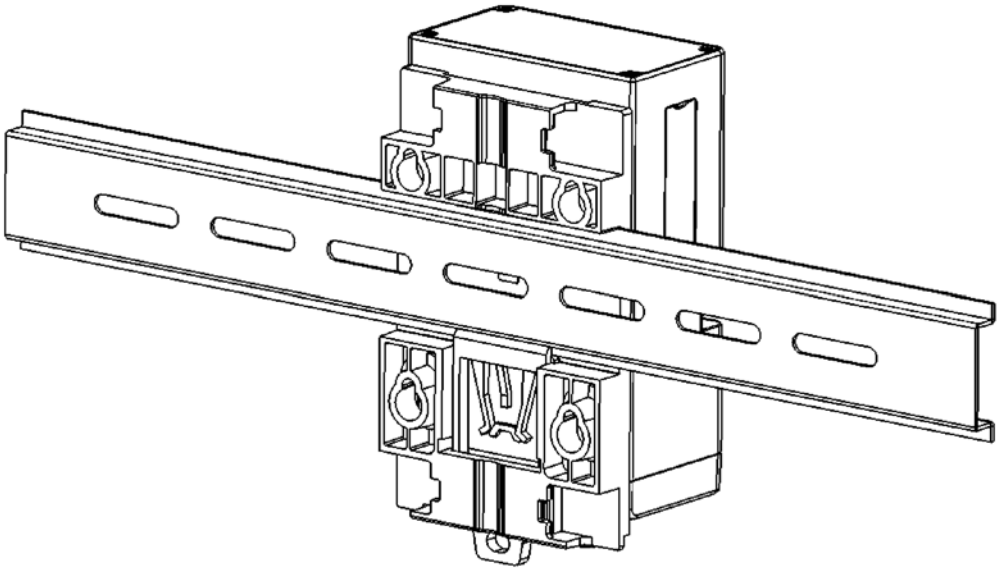

Figure 3.5 WISE-4470 DIN-rail Mounting (back)

3.2.2 Wall Mounting

The plastic wall-mounting bracket that comes with the module can be used to mount it on a wall, panel, or cabinet.

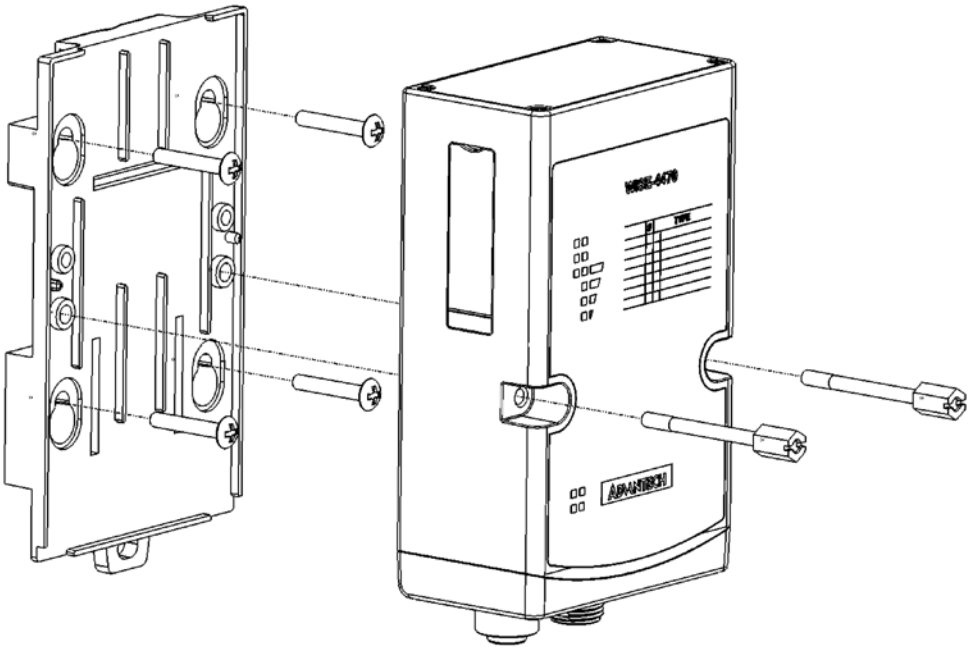

Figure 3.6 WISE-4470 Wall Mounting Installation

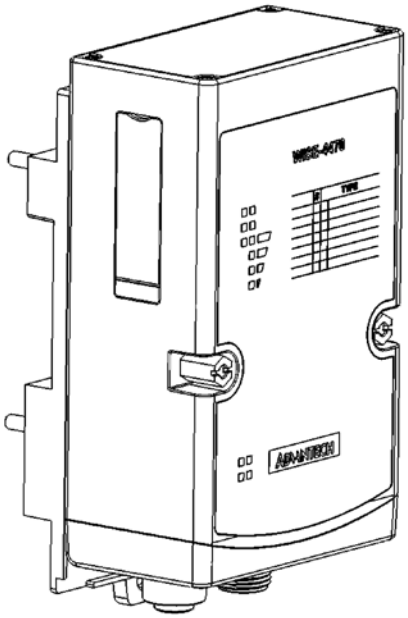

Figure 3.7 WISE-4470 Wall Mounting

3.2.3 Pole Mounting

For pole mounting, feed the pole-mounting ring through the hole in the middle of the module. The pole-mounting ring needs to be unlocked with a screw driver before it can be inserted through the module. To mount the module on the pole, tightly lock the pole-mounting ring.

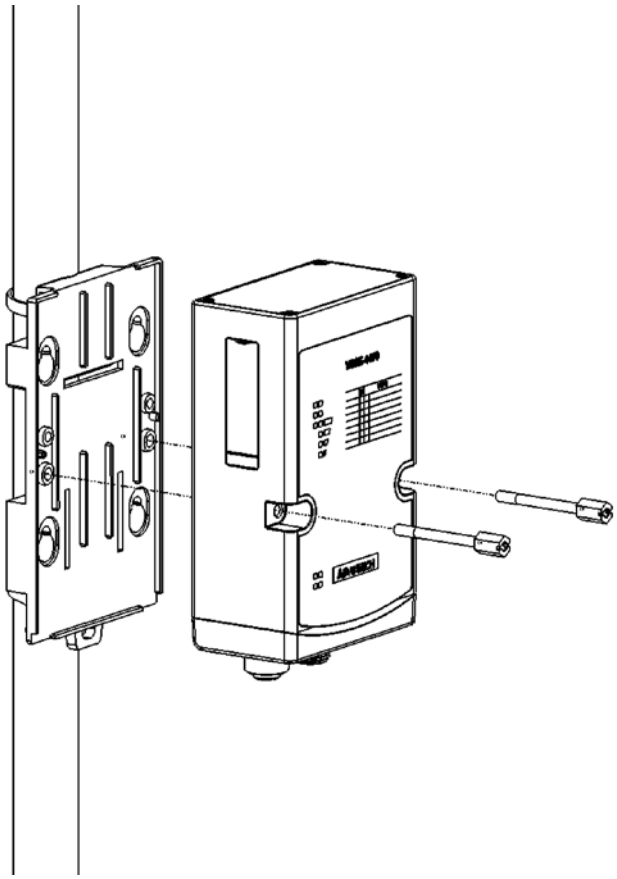

Figure 3.8 WISE-4470 Pole Mounting Installation

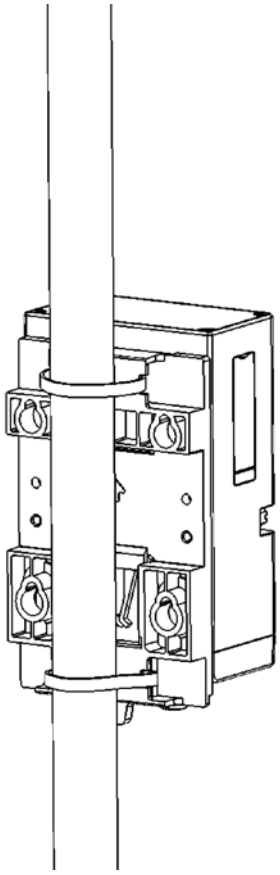

Figure 3.9 WISE-4470 Pole Mounting

3.3 Wiring & Connections

This section provides basic information on wiring the power supply and I/O units.

3.3.1 Power Supply Wiring

WISE-4470 modules are designed to support a standard industrial unregulated 24-VDC power supply. For other applications, they can also accept +10 to +50 VDC input with 200 mV of peak-to-peak power ripple. The immediate ripple voltage should be maintained between +10 and +50 VDC. The screw terminals labeled "+Vs" and "-Vs" are for the power supply wiring.

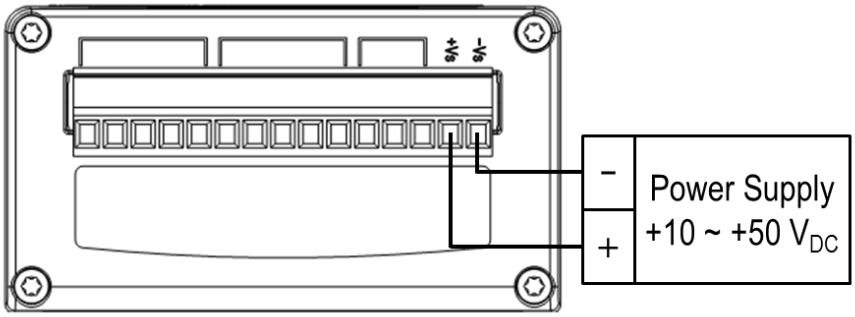

Figure 3.10 WISE-4470-S250 Power Wiring

3.3.2 I/O Units

WISE-4470 uses a plug-in screw terminal block for the interface between WISE-4470 and field devices. The following information is critical when connecting electrical devices to I/O modules.The terminal block accepts wires from 0.5 mm to 2.5 mm.

- Use the correct wire gauge (note that the terminal block accepts wires from 0.5 to 2.5 mm)
- Use a continuous length of wire (do not join separate wires to form a continuous length)
- Use the shortest wire length possible
- Use wire trays for routing wherever possible
- Avoid running wires near to high-energy wiring
- Avoid running input wiring near output wiring
- Avoid creating sharp bends or kinks in the wires

Chapter 4

System Configuration

4.1 Connection

1. Open the robber cover on the side of module, then you will see the micro SIM card socket. Please insert you SIM card here and be noted that only micro SIM can be used. Please take note that hot swap for SIM is not supported. Redo the power cycle after re-plug-in the SIM card.
2. Download and install USB driver form https://www.silabs.com/products/development-tools/software/usb-to-uart-bridge-vcp-drivers
3. The USB port is for configure in following steps. Please insert micro-B USB cable here and be noted that it don't provide power for WISE module.
4. Plug a DC power source into the +Vs, -Vs pin of your module to turn on the power.

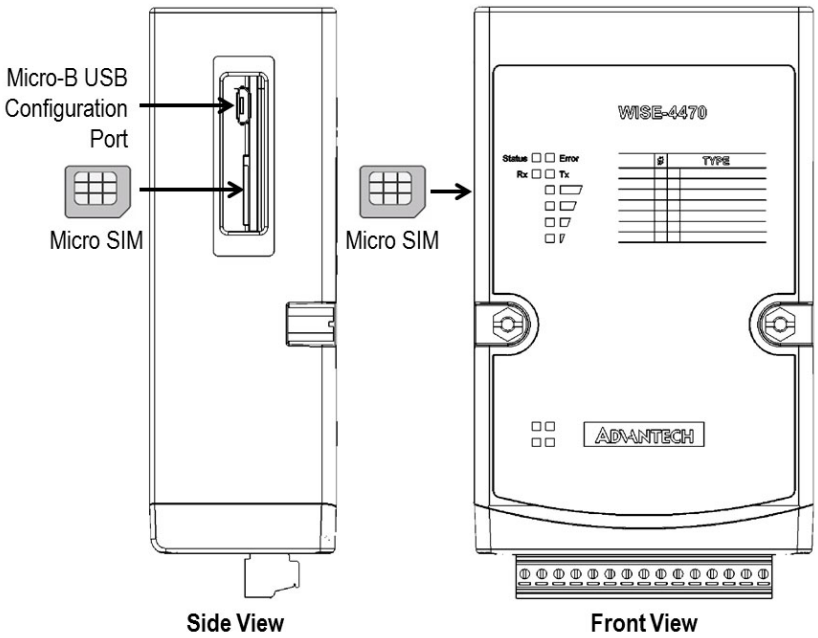

4.2 Configuring WISE-4470 Using WISE Studio

4.2.1 Minimum System Requirements

The minimum system requirements for WISE Studio are as follows:

- Microsoft Windows 7 or above
- Internet Explorer 11 or above

4.2.2 Installing WISE Studio

The latest version of WISE Studio is available on the Advantech support site: http://support.advantech.com/. To install the program, download the installation file and execute it locally.

4.2.3 A Brief Introduction to WISE Studio

WISE Studio is a new configuration tool for WISE modules. All configurations are based on a web interface, so you will notice that different models have similar configuration pages. For WISE modules configured by Ethernet, LAN, or WLAN, WISE Studio enables communication with the internal web server; for those configured by USB, WISE Studio will execute a web server on the computer that the software is installed on. The web server will use the USB interface to communicate with the WISE module. Information will be viewable via the embedded web page or you could open web page via browsers.

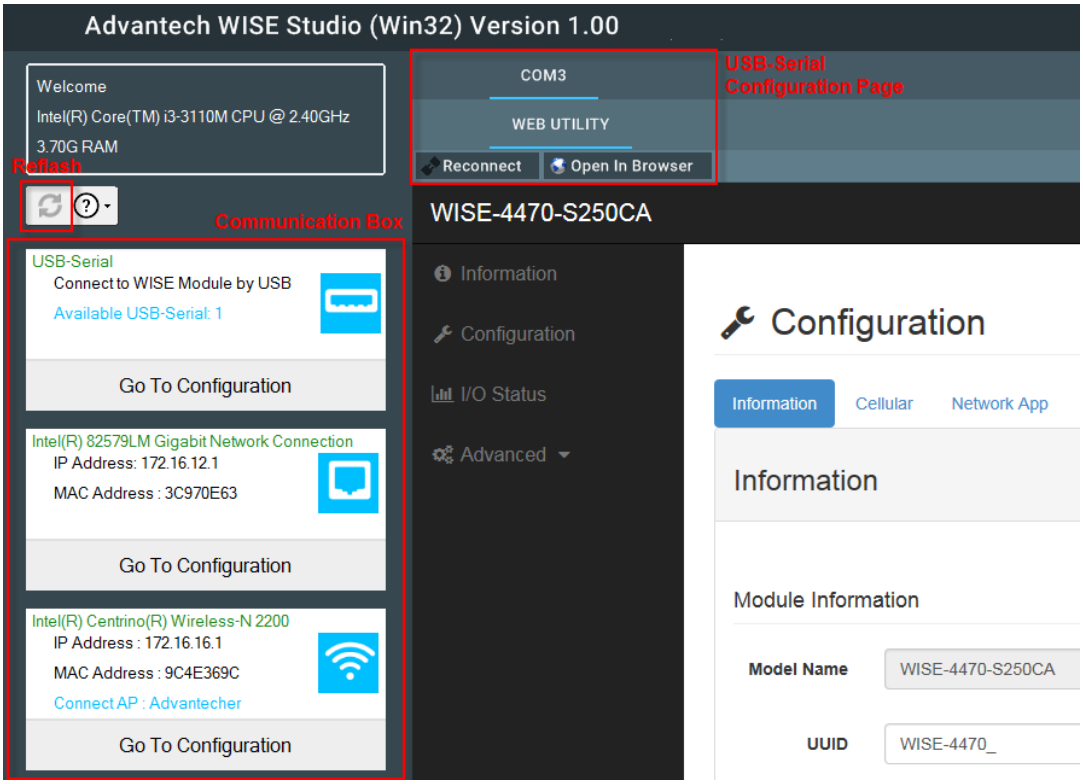

Communication Box

In this box, there are several communication interfaces for configuring different WISE modules. The WISE-4470 series uses the USB-serial interface for configuration.

- **Refresh:** Pressing this button refreshes the USB-serial interface.
- **USB-Serial:** This block is for connecting to a WISE module via USB. The available USB-serial port number will be shown here. Click **Go to Configuration** to connect the USB COM port.

USB-Serial Configuration Page

After **Go to Configuration** is clicked, all available USB COM ports will be displayed. Choose the COM port that you are going to configure and click **Connect** to open the **Configuration** page. You can further click **Open in Browser** to use your default browser to configure the WISE module (IE is the default browser embedded in WISE Studio).

4.2.4 Information Page

Module Information

This page displays the name of the module and related information. Click Go to Configuration to view or change the settings:

- **Model Name:** Model of the WISE module.
- **Customized Name/UUID:** Refer to the model name and UUID of the module. The default UUID is a combination of the model name and MAC address. You can modify this value.
- **Location Information:** Information on the location of the module is given here.
- **Description:** Any comments describing this module can be given here.

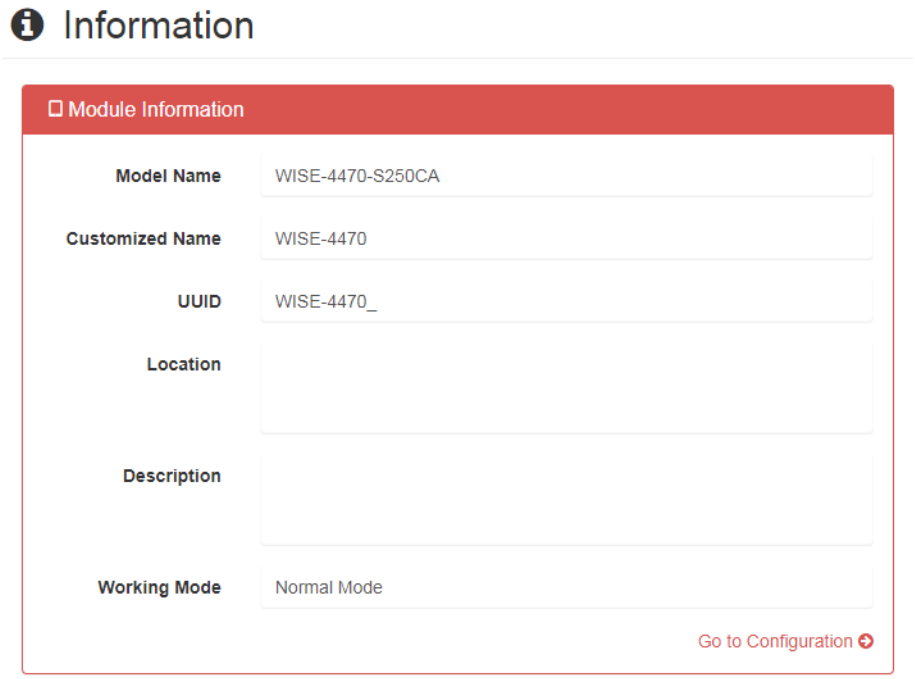

Cellular Information

This block shows information on the cellular RF module and cellular network status.

- **PIN Status:** The PIN code status of the SIM card.
- **Register Status:** Registration status with the cellular network operator.
- **Current Service Mode:** Network device mode (e.g., GSM)
- **Signal Strength:** Indicates the received signal strength indicator (RSSI) of the cellular network.
- **IP Address:** IP address assigned by the cellular network.
- **Operator Name:** Name of the cellular network operator.
- **Modem Manufacturer:** Manufacturer of the RF module.
- **IMEI Code:** International Mobile Equipment Identity of the current modem.
- **IMSI Code:** International Mobile Subscriber Identity of the current SIM card.

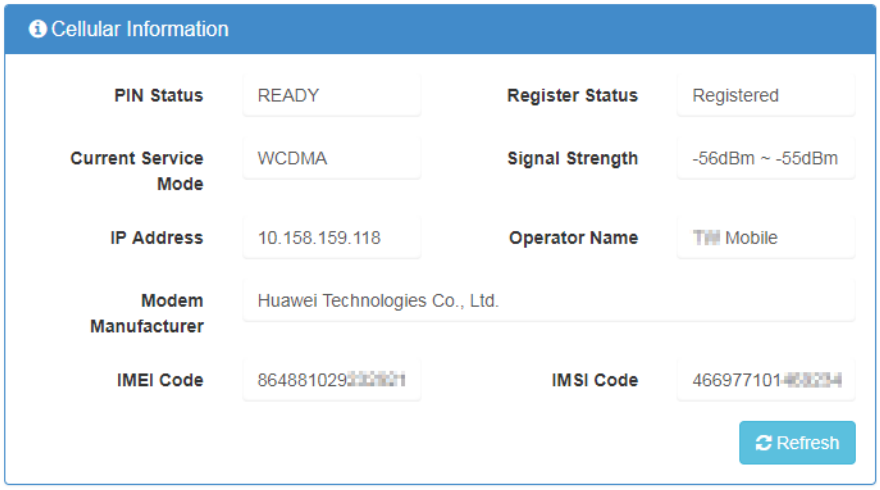

Firmware Information

In this page, you can check the model name and module description. The firmware version is also shown at the end of the configuration web page. To update the firmware, go the **Firmware Version** section.

- **Module Name:** Name of the WISE module.
- **Module Description:** Description of the WISE module.
- **Firmware Description:** Firmware and bootloader version of the WISE module.
- **Web Page Version:** The web page version is given at the bottom of the Configuration page before the copyright information.

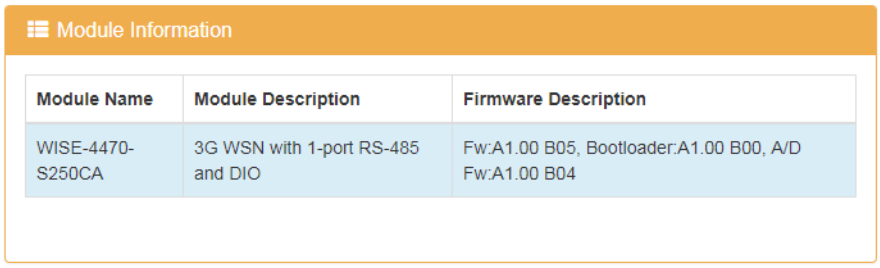

4.2.5 Connecting to a Cellular Network

Enter the PIN Code

First, insert a SIM card into the WISE module, and then go to the **Configuration** page and click the **Cellular** tab. Enter the PIN of the SIM card in the **PIN Authentication** dialog box. Selecting the **Auto Write PIN Code** check box will save the PIN code to the WISE module.

Cellular Information

After the PIN code has been entered, information on the cellular network will be available in the **Cellular** tab:

- **PIN Status:** The PIN code status of the SIM card.
- **Register Status:** Registration status with the cellular network operator.
- **PUK Remaining Attempt Times:** Indicates how may times remain for entering right PUK number
- **PIN Remaining Attempt Times:** Indicates how may times remain for entering right PIN number
- **Current Service Mode:** Network device mode (e.g., GSM).
- **Signal Strength:** Indicates the received signal strength indicator (RSSI) of the cellular network.
- **IP Address:** IP address assigned by the cellular network.
- **Operator Name:** Name of the cellular network operator.
- **Modem Manufacturer:** Manufacturer of the RF module.
- **IMEI Code:** International Mobile Equipment Identity of the modem.
- **IMSI Code:** International Mobile Subscriber Identity of the SIM card.

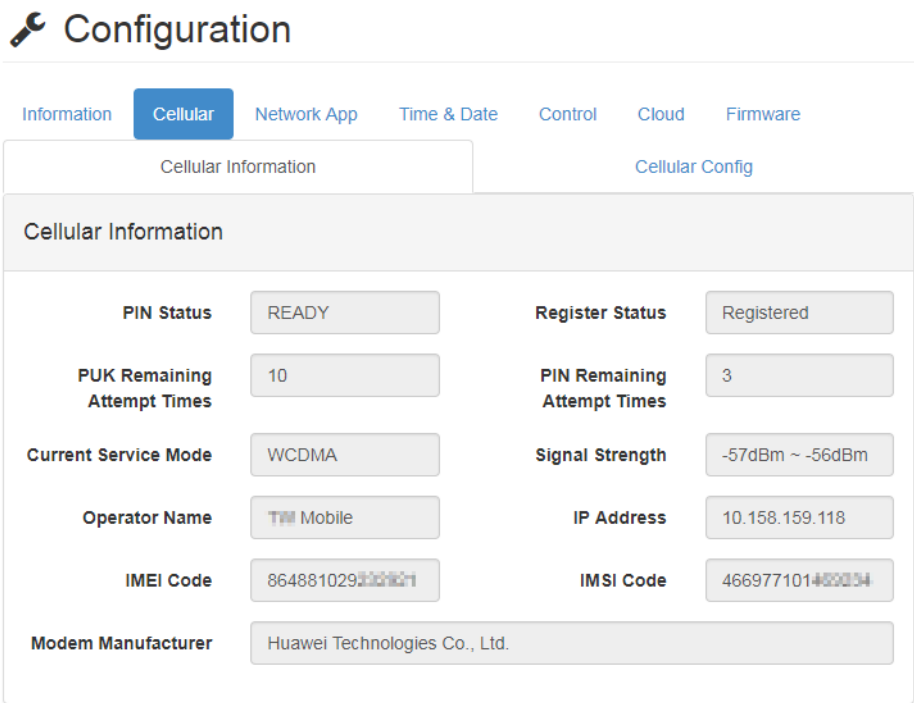

Cellular Configuration

After the SIM card has been inserted into the WISE module, it can be configured in this page:

- **Auto Write PIN Code:** Enables the PIN code to be saved to the WISE module.
- **PIN Code:** Configure or modify the PIN code here.
- **Access Point Name (APN):** Configure the APN of the cellular network provider.
- **SMS Password:** Password for SMS configuration (maximum length = 8).
- **SMS Center:** SMS center address of the cellular network operator.

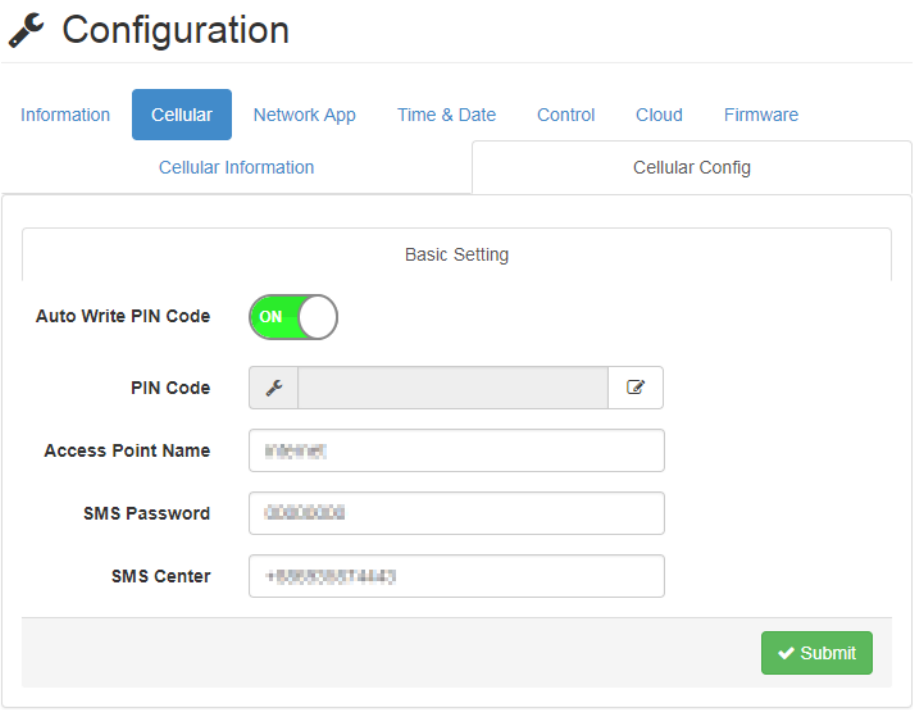

4.2.6 I/O Status Configuration

4.2.6.1 Digital Input

Status

The value of all digital input channels can be determined from the related LED display in the DI tab (green LED = "logic high"; grey LED = "logic low").

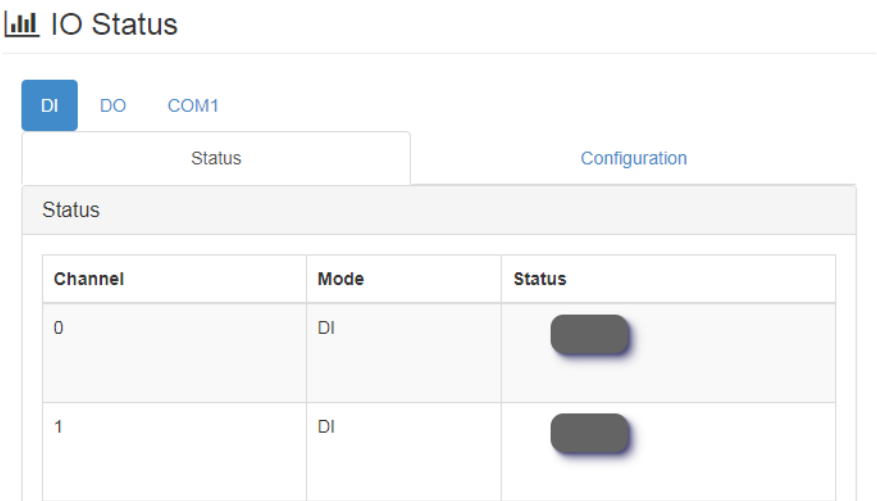

Configuration

The digital input channels support several operation modes and can be configured from this page.

- **Channel:** Select the channel to be configured.
- **Tag Name:** Each channel can be given a tag name for identification.
- **Mode:** The operation mode of each channel can be configured here, or channels can be disabled to improve the performance of enabled channels. After a channel has been configured, pressing **Submit** at the end of this page will apply the changes.
- **Channel Mask:** Each channel can be disabled individually for reducing date traffic during communication.
- **Refresh:** Refresh the configuration.

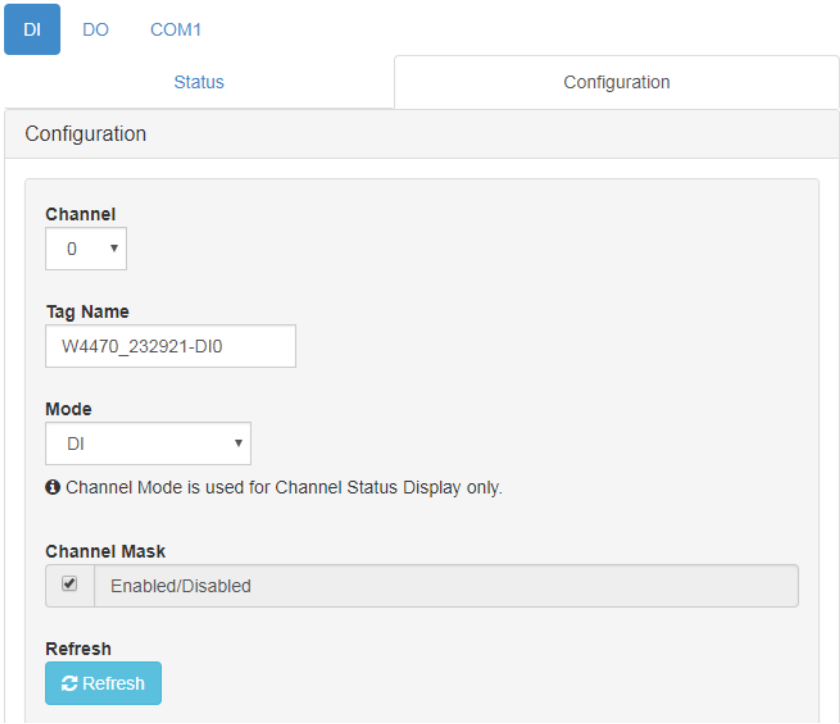

- **Invert Signal:** WISE digital input channels support the invert digital input status function. To enable/disable this, select the **Invert Signal** check box on the Configuration page.
- **Digital Filter:** Digital input channels have a digital filter that can remove high-frequency noise. The filter can be enabled/disabled by clicking the Digital Filter check box. When the filter is enabled, the minimum acceptable signal width can be defined in the **Min. Low Signal Width** and **Min. High Signal Width** boxes (increment: 0.1 ms).

- **Counter:** When counter mode is selected for a given channel, a counter will count the number of pulses in the digital signal from that channel and then record the value to the register. In the **Status** page, the current count value of the selected channel is displayed in the **Counter value** box. The counter can be started/stopped by pressing **Start/Stop**, which is located beside the counter value. The counter can be reset (the value in the register will be initialized to the startup value, which is zero by default) by clicking Reset. The predefined startup value will be the value shown in the **Counter value** box. When this value is reset, either by pressing **Reset** on the **Status** page or by issuing a command, it will return to the startup value, which is zero by default.
  If **Keep Last Value** is enabled, the last counter value will be kept in the register when the module is powered off. When the module is powered on, the counter will continue to count from that value. When this function is disabled, powering off the module will cause the counter to be reset and the count value in the register to be reset to zero.
- **Frequency:** For pure digital input channels, WISE modules support frequency mode, which calculates the frequency of the digital input signal of the selected channel. The frequency value will be displayed in the **Frequency value** box on the DI Status page. **Precision** can be configured here to decide the unit of frequency for different kind of input range. **Value Reset Time** function is design for deciding when will the frequency value been reset to zero if pulse bandwidth longer than expect.

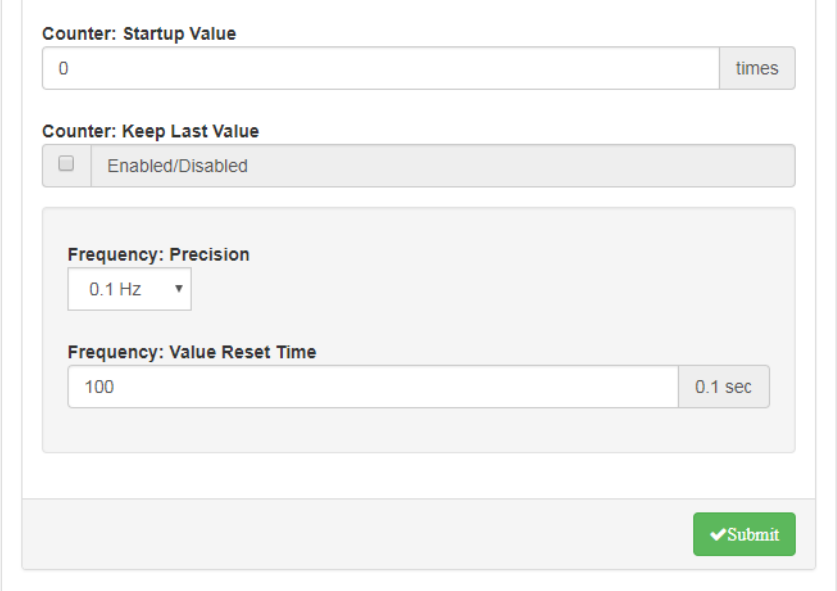

- **Low-to-High Latch:** Under low-to-high latch mode, once a digital input channel detects that the logic level has changed from low to high, the logic status will remain as "logic high" until the latch is cleared manually, which will return the logic status to "logic low." The logic status is viewable on the latch status LED display on the **DI Status** page. Clear the latch by clicking **Clear** on this page.
- **High-to-Low Latch:** Under high-to-low latch mode, once a digital input channel detects that the logic level has changed from high to low, the logic status will remain as "logic low" the latch is cleared manually, which will return the logic status to "logic high." The logic status is viewable on the latch status LED display on the **DI Status** page. Clear the latch by clicking **Clear** on this page.

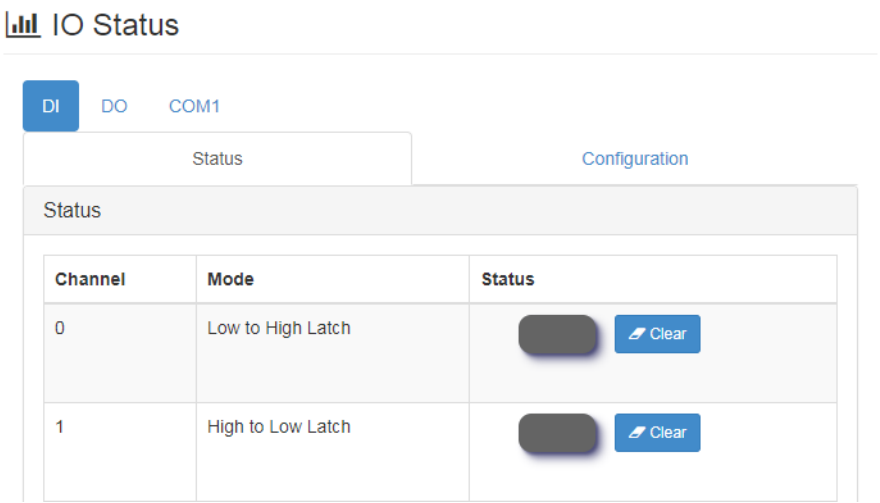

4.2.6.2 Digital Output

Status

The values of all digital output channels can be controlled via the status switch, the color of which indicates the current value of the digital output channel.

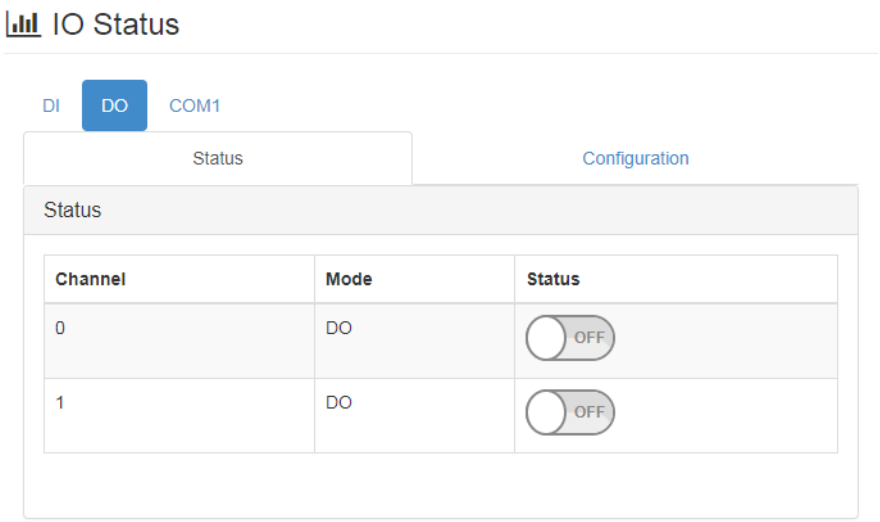

Configuration

The digital output channels support several operation modes and can be configured from this page.

- **Channel:** Select the channel to be configured.
- **Tag Name:** Each channel can be given a tag name for identification.
- **Mode:** The operation mode of each channel can be configured here, or channels can be disabled to improve the performance of enabled channels. After a channel has been configured, pressing **Submit** at the end of this page will apply the changes.
- **Channel Mask:** Each channel can be disabled individually for reducing date traffic during communication.
- **Refresh:** Refresh the configuration.

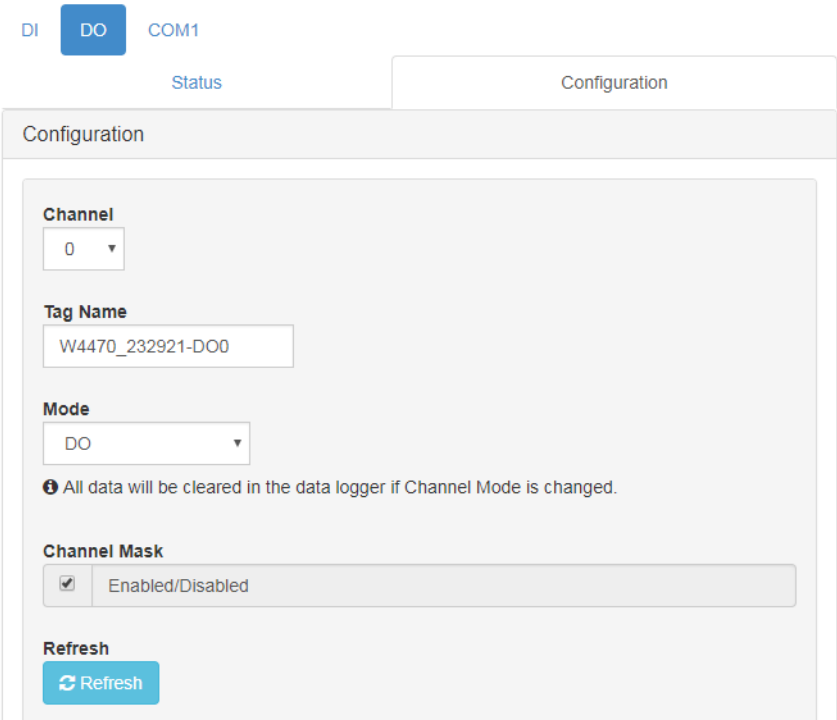

- **FSV (Fail-Safe Value):** The digital output channels can be set to generate a predefined value when communication between a host controller and a WISE digital module is broken. To do this, select the FSV check box for the module to set the output channel to "logic high" when the WDT times out. If the FSV check box is clear, the module will set the output channel to "logic low" if the WDT times out. To set the module so that the **FSV** is triggered by the WDT, go to **Network App** on the **Configuration** page to enable **Communication WDT Trigger FSV** for all of the module's output channels, and then set the communication WDT mode to "Communication WDT." The default host idle time is 720 s, and this can be configured by entering a value in the **Host Idle (Timeout Sec)** box (unit: s) in this page.
- **Pulse Output:** In pulse output mode, the selected digital output channel can generate a continuous pulse train or finite pulses. The pulse width can be set by entering a value in the **Low Signal Width** and **High Signal Width** boxes on the **Configuration** page (increment: 0.1 ms). The frequency and duty cycle of the pulse output signal will be calculated automatically and displayed in the Output frequency and Duty cycle boxes, respectively. Whether a continuous pulse train or finite pulses will be generated is determined by clicking **Continuous** or **Fixed total**, respectively. The number of pulses to be generated can be set by entering the value in the box to the right of **Fixed total**. After the pulse output mode has been selected, click **Start** or **Stop** to generate or stop the pulse output.

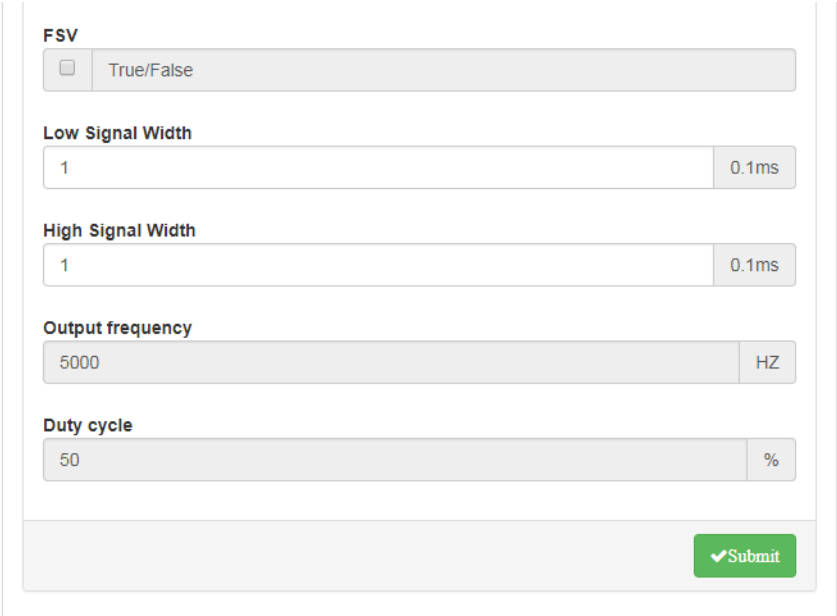

- **Low-to-High Delay:** Low-to-high delay mode is similar to digital output mode; the only difference is that there will be a time delay when the output value changes from "logic low" to "logic high." The delay time can be defined by entering its value in the Delay Time box on the **Configuration** page. The digital output value can be controlled by clicking **DO**; the current value can be viewed from the digital out status LED display on the **DO Status** page.
- **High-to-Low Delay:** High-to-low delay mode is similar to digital output mode. The only difference is that there will be a certain time delay when the output value changes from "logic high" to "logic low." The delay time can be set by entering its value in the **Delay Time** box on the **Configuration** page. The digital output value can be controlled by clicking **DO**; its current value can be viewed through the digital output status LED display in the **DO Status** page.

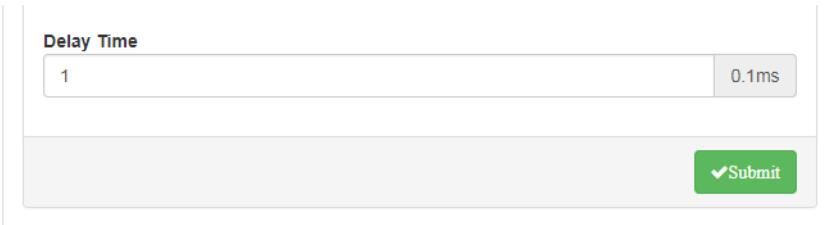

4.2.6.3 COM1 (RS-485 Port)

The WISE-4470-S250 has one RS-485 port for Modbus gateway functionality; thus, you can use this port to poll data from RS-485 Modbus/RTU slave devices such as the ADAM-4000 series or ADAM-5000/485 series.

Status

Go the **COM1** tab to check the status or to configure the RS-485 Modbus master function. A total of 32 addresses for all Modbus slaves can be mapped as the WISE module I/O. These 32 addresses can be coils or registers; coils will be mapped as extension bits of the WISE module, and registers will be mapped as extension words of the WISE module. In the **COM1** status tab, the bits and words are shown on individual pages.

- **Channel:** Indicates the number of bits. A maximum 32 bits can be shown here, but you may map only fewer than 32 coils as bits, which makes the empty bits invalid. The same applies to words, which may also have empty channels.
- **Value:** Indicate the value polling from mapped address.
- **Status:** Indicate the status of each bit or word, if a channel is empty and has not been mapped to a Modbus slave address, its status will be "Unavailable."
- **Slave ID:** Indicates the Modbus salve ID of RS-485 Modbus slave devices.
- **Slave Address:** Indicates the address of a bit or word from an RS-485 Modbus slave device.

For a writable bit or word, you can click **Edit** to switch to edit mode; here, you can change the values and then click **Apply** to write the Modbus addresses individually.

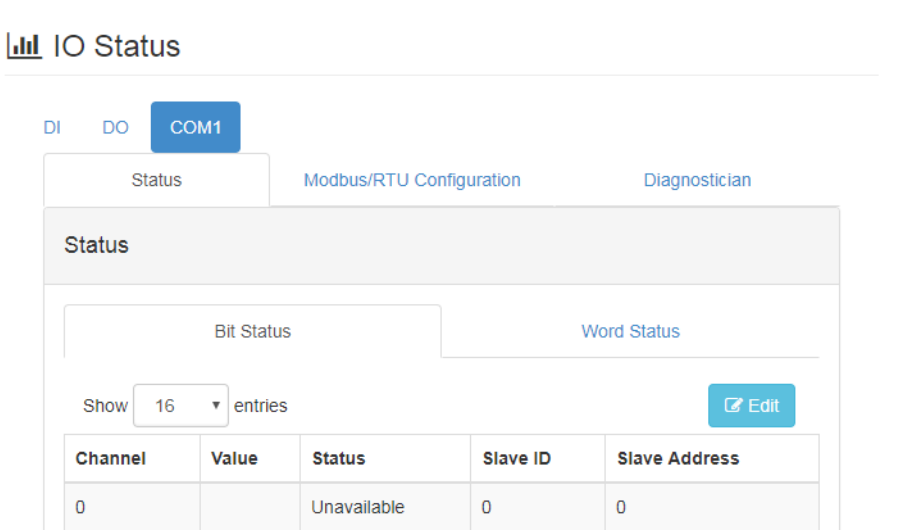

Modbus Configuration - Common Settings Tab

In this tab, you can configure the parameters of the RS-485 port.

- **Baud Rate:** 1200, 2400, 4800, 9600, 19200, 38400, 57600, 115200 bps
- **Data Bit:** 7, 8
- **Stop Bit:** 1, 2
- **Parity:** None, Odd, Even
- **Slave Response Timeout:** For setting the time for Modbus slaves to reply
- **Delay between Polls:** For setting the delay time between each Modbus instruction
- **CRC Check:** For disabling the CRC check to ignore Modbus CRC errors

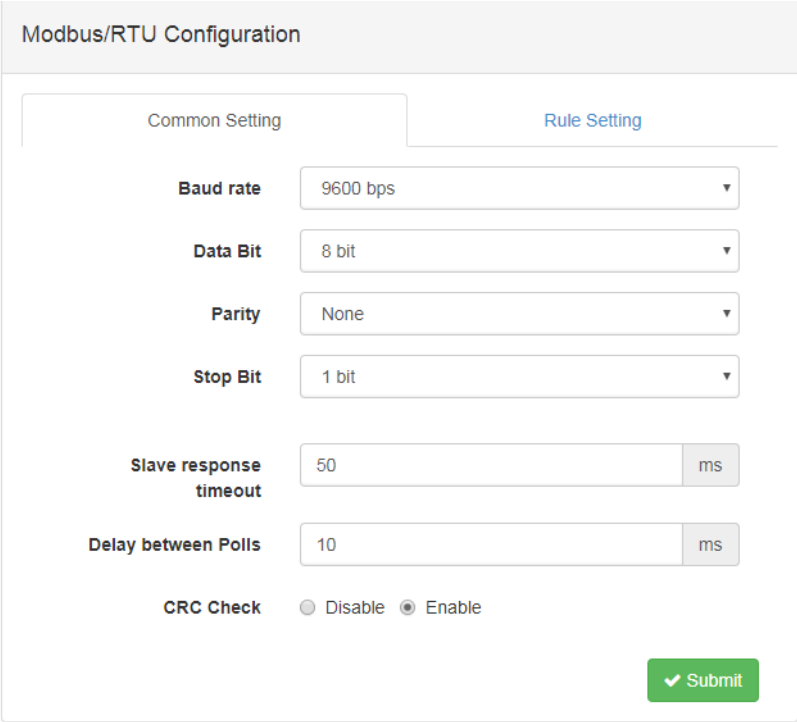

Modbus Configuration - Rule Setting Tab

In this tab, you can configure the Modbus address of end devices you would like to poll.

- **Rule:** There is a maximum of 8 rules that each COM port can support. Each rule can be for a different slave device, meaning that there can be a maximum 8 of devices connected to the COM port. Alternatively, you can use all of the rules for polling different addresses on the same slave device.
- **Slave ID:** Different slave devices in the same RS-485 port have different slave IDs; enter the slave address of the Modbus devices that are connected to the WISE module here.
- **Type:** This device supports Modbus data types: 01 Coil Status (0x), 02 Input Status (1x), 03 Holding Registers (4x), and 04 Input Registers (3x). After one of the types has been configured in the rule, the rule will be enabled and the COM port will start polling after the configuration has been submitted successfully.
- **Start Address:** Enter the first address number that you are going to poll. The address base is 1; if you are going to polling the first address of a holding register (i.e., 40001), then simply enter the number "1" here (you do not need to enter the entire address "40001").
- **Length:** Enter the length of the address that you are going to poll in this rule. For example, if you are going to poll 40001~40008, set the length to "8." Note that since each COM port can poll a maximum of 32 addresses, the maximum length is 32 and the total number of all rules should not exceed 32.
- **R/W:** Here, you can set whether the address in this rule will be read or written. For coil statuses and holding registers, you can make these addresses read-only or write-only to reduce the polling effort.
- **Scan Interval (unit: s):** Here, you can set the scan interval for the COM port to poll Modbus slave devices. The COM port will optimize the scan interval according your setting. However, the read scan interval may also depend on factors such as the Baud rate, slave device response time, delay between polls, and so

on. See the **Diagnostician** page to check the real response time as a reference for the scan interval value.

- **Mapping Channel:** When the Modbus address of slave devices has been configured in each rule, these addresses will also be mapped to the WISE module. Coils and registers of Modbus slave devices will be mapped as bits for RESTful web service. There are 32 continuous channels of bits and another 32 continuous channels of words that can be mapped. Please ensure that the channels for each rule do not overlap.
- **Log:** Here, you can set whether the data that have been polled from this rule will be logged in the data logger.
- **Deviation/Change of Status (COS):** When this check box has been set, the difference of polling values between the current poll and the last poll can trigger the deviation/COS (change of state) for push data or log data.
- **Rule Status:** The web configuration interface will check whether the rule settings have any overlap or conflict. The enabled rules, which are enable the rule by setting the **Type** value, should have a green icon so that a "Submit" message will be shown for you to confirm submitting the rules.

Note! *After you have configured the rules, click Submit to apply them.*

Note! *After you have changed the rule configurations, logged data in the data logger will be cleared to accommodate the new data structure of the data logger under the new configuration.*

Note! *You can hover your mouse over the table title rows to view tooltips.*

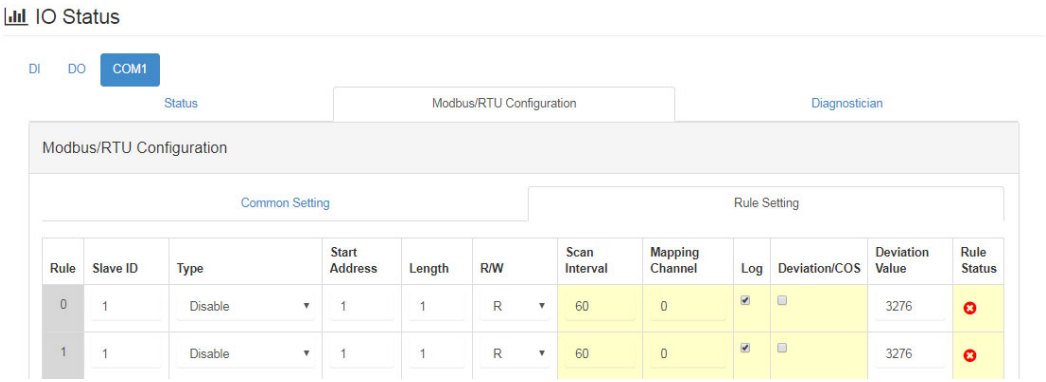

Diagnostician

Since different devices will have different response times, the WISE-4470 provides a diagnostics function for testing the response time of each rule. This is intended to reduce the scan interval. You can refer to the response time on this page when configuring the **Scan Interval** in **Rule Setting** pages. You can reset the test result on this page by clicking **Reset Response Time**.

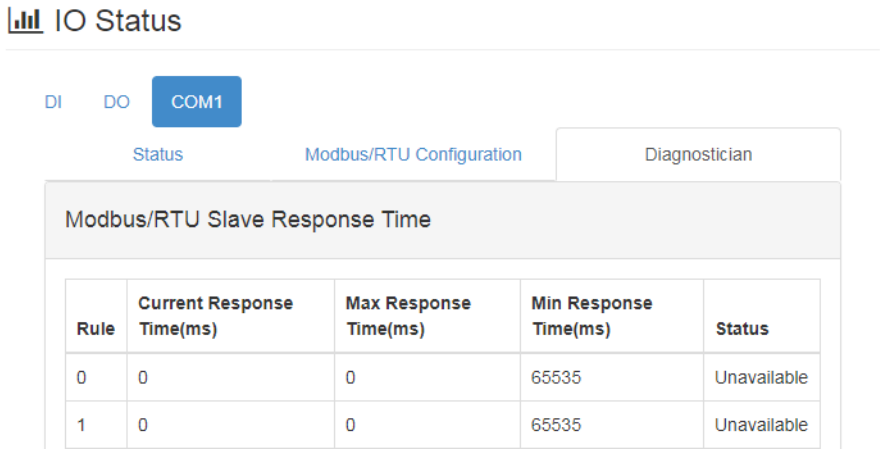

Rule	Current Response Time(ms)	Max Response Time(ms)	Min Response Time(ms)	Status
0	0	0	65535	Unavailable
1	0	0	65535	Unavailable

4.2.7 System Configuration

Network Application

- Host Idle (timeout sec): Decides the availability of the TCP connection between the host controller and WISE. MCU-based WISE modules support four TCP connections at the same time for visiting users. It means WISE can be visited by four TCP hosts at the same time, and is not able to connect a fifth host. In this case, if one of the hosts stops communicating with the WISE module for longer than the configured host idle time, default 720 seconds, for example, the WISE module will close the TCP connection with the host.
- Communication WDT: After configuring Host Idle time, and will be triggered when all TCP connections are closed. This includes all hosts which visit WISE and also the communication between remote servers like private servers. Once the WDT is enabled, it will trigger systems events like FSV of output channel or system log.
- Communication WDT trigger FSV: Decide whether FSV of output channel will be triggered by communication WDT.
- Reboot Interval: Decide the time interval in minute to reboot WISE module when WISE module is not able to connect to cellular base station.
- RF Reset Interval: Decide the time interval in minute to reset the RF module in WISE module when WISE module is not able to connect to cellular base station.

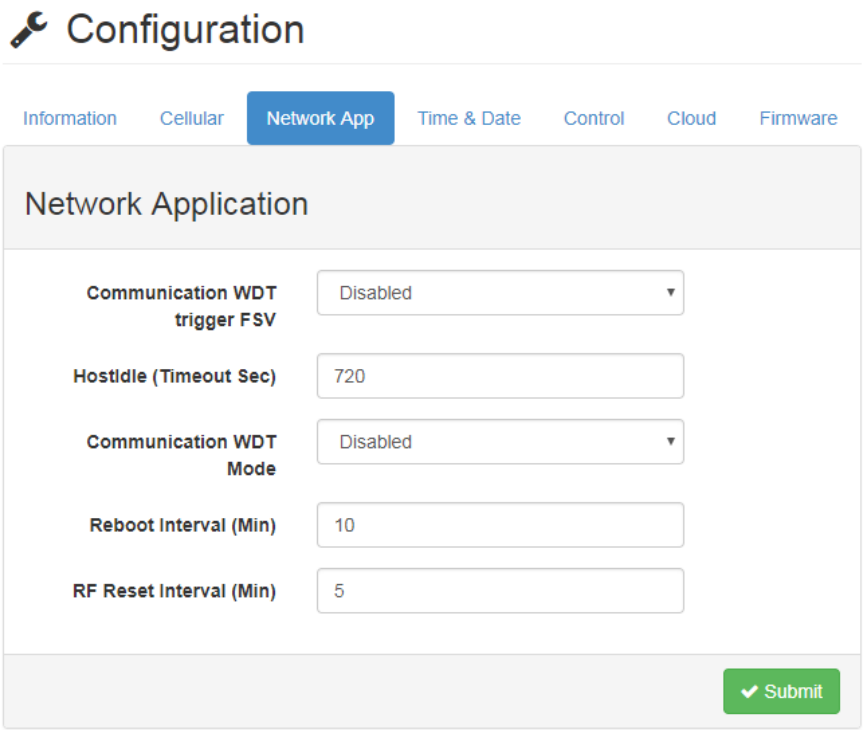

Time & Date

WISE modules have a built-in RTC that allows you to view the current time, set the time zone, and adjust the time by pressing **Click Me** to read the time from host devices.

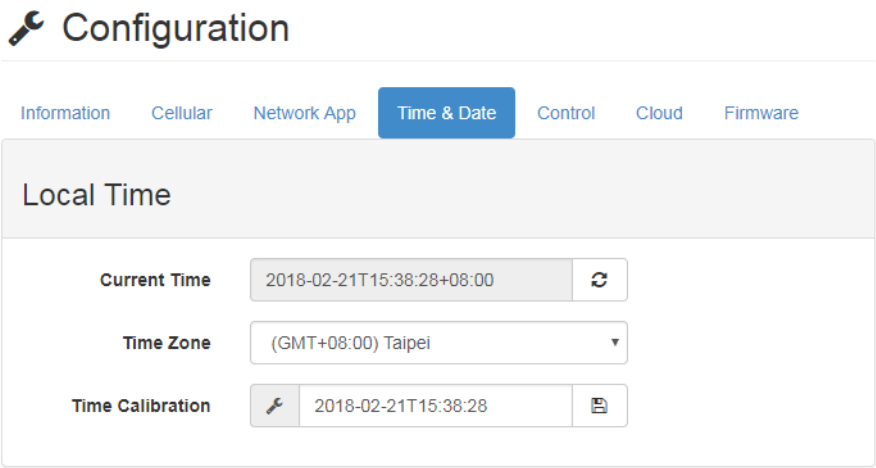

Control

- Restore to Default: The system configuration will be cleared and restored to factory default settings when clicking the icon.
- System Restart: This module's system will reboot when clicking the icon.

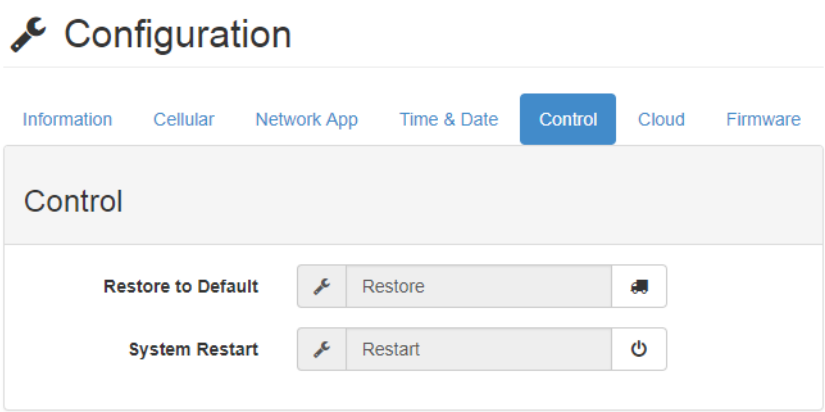

Firmware

To update the firmware, go to the **Firmware** page in **System Configuration** and click the icon of the file you wish to use in the update. You can find the latest official firmware releases on the Advantech support site (http://support.advantech.com/).

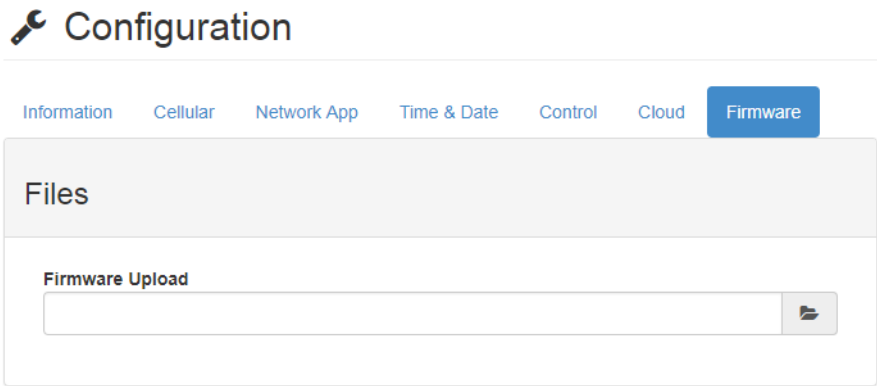

4.2.8 Access Control

A phone number can be used to determine which phones or devices can remotely control the digital output channels of WISE module, or receive the alert message from WISE module. Enable one of the rows and enter the phone number that allows access to the WISE module or will received the alert message.

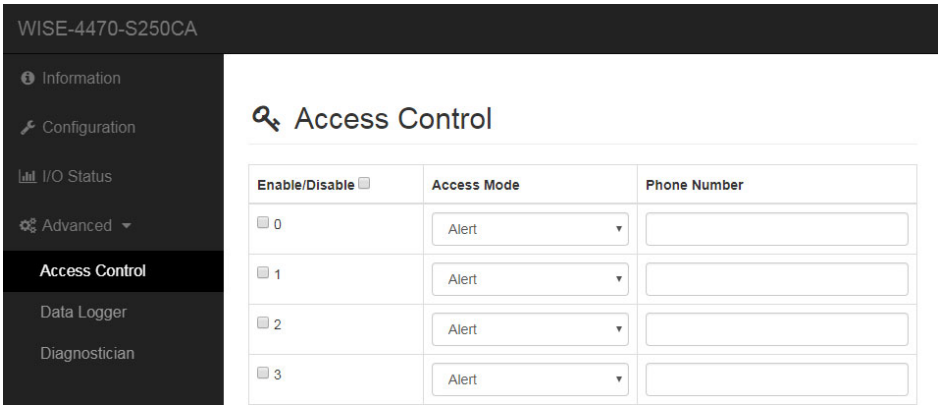

4.2.9 Data Logger

The WISE-4470 series supports data logging. The I/O status can be logged in and queried from the module. Before you start the log function, please ensure that the RTC inside the WISE module has the correct time. A battery is used to store the time in the RTC but there may be some discrepancy due to the accuracy of the RTC.

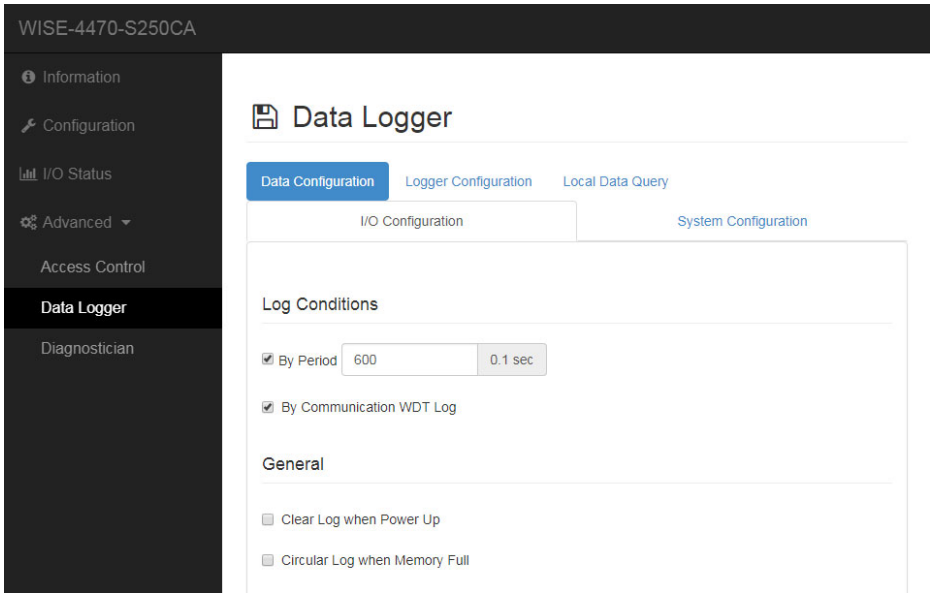

Data Configuration

To choose the method that will be used to log data, go to the **Log Conditions** section in **Data Configuration**. Selecting the **By Period** check box enables periodic logging, and the log period can be set in the following field (increment: 0.1 s; a value of "600" here means that the I/O status will be logged every minute). If you select the **By Communication WDT** check box, the I/O status will be logged once the WDT condition has been met.

All data can be stored even when the module is powered off. You can clear all data in the logger when powering up the WISE module by selecting the **Clear Log when**

Power Up check box. When the memory is full, the logger will stop logging unless you select the **Circular Log when Memory Full** check box, which will cause the module to overwrite the memory.

To set which I/O channel's status will be logged and whether a change of the status will also be logged, go to the **Channel Fields** tab. Note that the log memory will be cleared when any parameters are changed in the **Channel Fields** or in **IO Fields**.

For digital channels, select the **Log Enabled** check box to periodically log the status of the selected channel. Alternatively, select the **Change of State** check box to trigger data logging when a status change occurs.

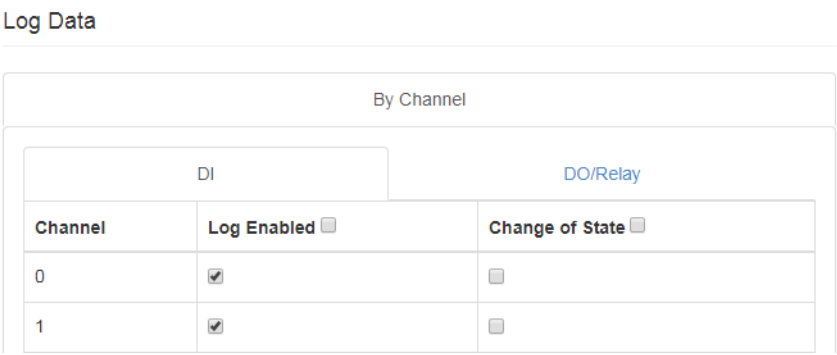

The WISE data logger function can log the I/O status as well as system events for module diagnostics and troubleshooting. You can decide type of system events you would like to log.

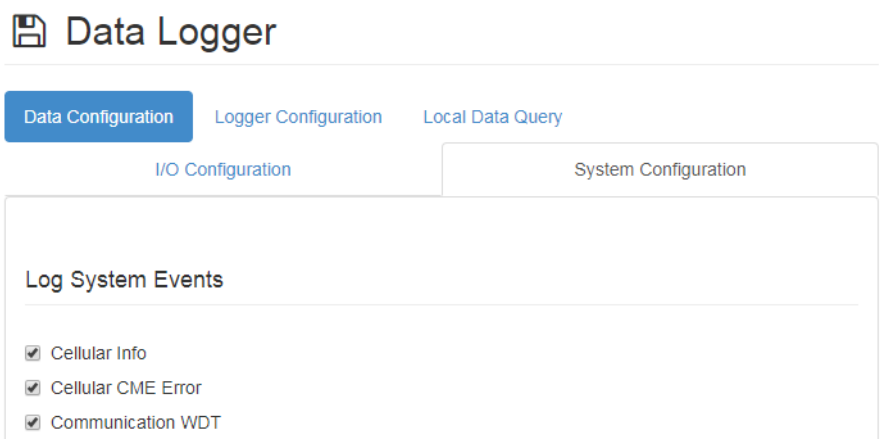

Logger Configuration

On this page, you can enable the local memory storage function. There are separate switches for enabling the logging of I/O data or system data. Simply turn ON the switches to enable logging.

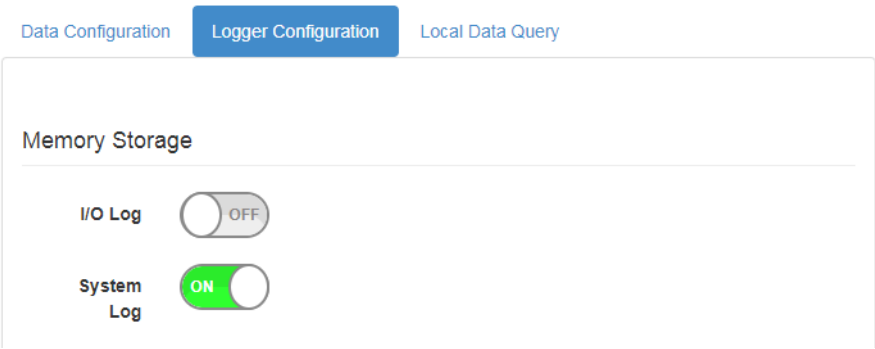

Local Data Query

You can query data that have been logged in the WISE module. Queries that are output to file will be saved in .Json format. You can visit https://json-csv.com/ to convert the data from .Json to .Csv.

Before performing a query, you can first configure the format of the file. Here, you can choose whether the data will include a UUID or MAC ID, and you can also choose the type of time stamp. WISE modules support Local Date and Time (GMT) format will have time stamps like "2015-08-27T15:20:29+08:00," and those that support Coordinated Universal Time (UTC) format will have time stamps like "1440660089."

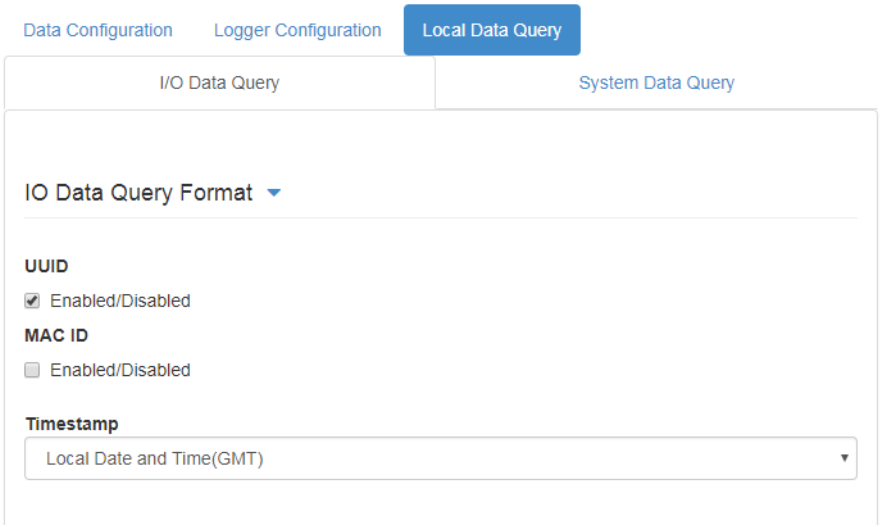

After the data format has been selected, the data can be filtered by selecting **Amount of Latest Data** (to query a certain number of data entries) or **Time Filter** (to query data entries within a specific period of time). To query all data (assuming it is not too large), you can also select **No Filter Enabled**.

Now you can click **Query** to query the data from local memory. Then, the data will be shown in a chart and table. Click **Save** to save the data from the WISE module in .Json format, or click **Clear** to clear all data in local memory.

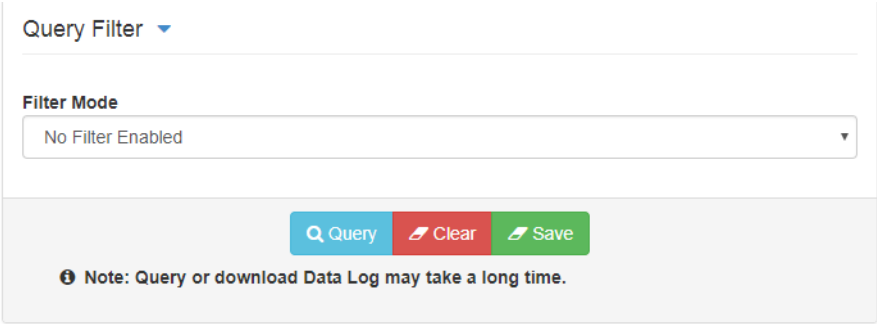

4.2.10 Diagnostician

The **Diagnostician** page indicates the operating status of the WISE module. The status of each function is shown on this page for easy troubleshooting.

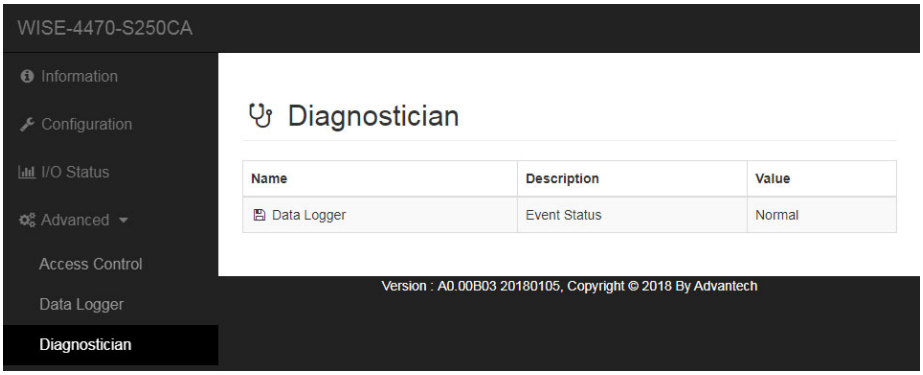

4.2.11 Private Server

If you do not want to push data to a public file-based cloud (e.g., Dropbox), the WISE module also has a private server function that can push data directly to a private web server. You can set up your own web service to retrieve data from the WISE module, or you can use the web server example agent provided by Advantech on your own server to retrieve the files pushed from the WISE module.

Go to the **Cloud Configuration** page and select **Private Server**. Then, configure the private server settings. If you would like to use the example agent, you need to confirm the server IP and server port number (also ensure that the server port you configure is not occupied by another application on your private server). To set up your own application to retrieve files from the WISE module, you need to configure the URL. For security, the WISE module also supports SSL security with Dropbox and also Private Server. When SSL security is enabled, you will need to setup the SSL service on your private server. If you are not able to setup the SSL service, we still provide username and password for authentication between WISE and sample agent.

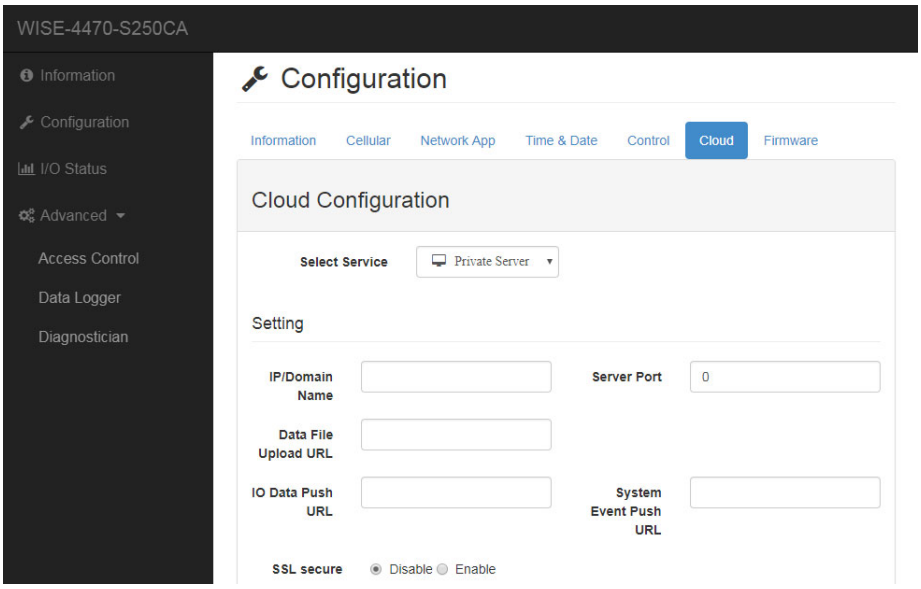

After the private server settings have been configured, return to the **Logger Configuration** page in the data logger. Before switching **Cloud Upload** to **ON**, you can individually configure the data upload criteria for I/O signal and system diagnosis.

You can select **Item Periodic Interval** mode to push a certain amount of data or **Time Periodic Interval** mode to push data within a certain period of time (increment: 0.1 s). If you do not want to upload I/O or system data, select **Disable**. After the upload criteria have been configured, you can switch **Cloud Upload** to **ON** and commence uploading. The data will be pushed to the cloud in .csv format.

The **File Name Format** can be configured as date only (YYYYMMDD) or date with time (YYYYMMDDHHMMSS). There are two kind of **Timestamp Format** can be configured: **Coordinated Universal Time (UTC)** or **Local Date** and **Time (GMT)**.

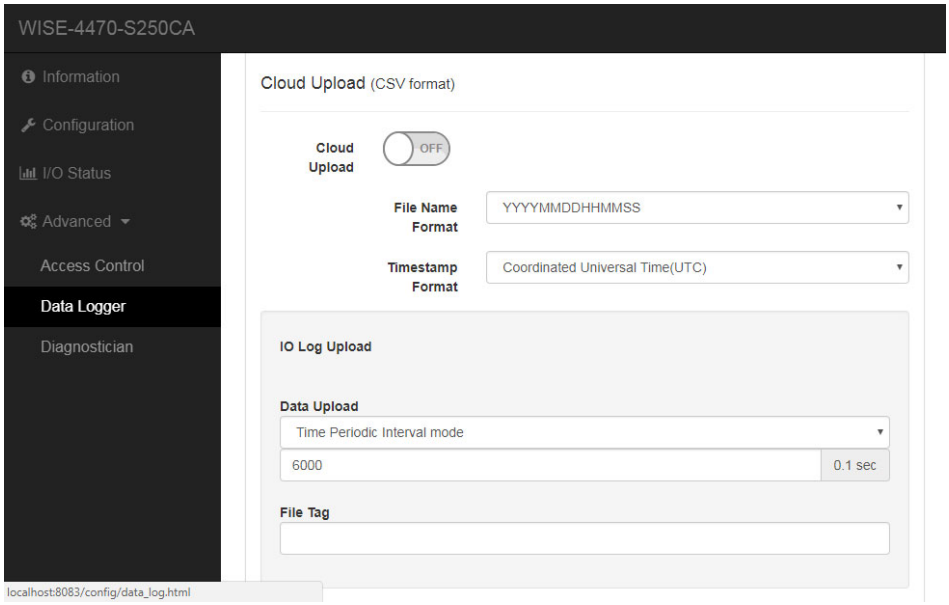

4.2.12 Push Notification

For cloud logger functions such as the **Private Server** function, data are extracted from the local memory of the WISE module. You can pack data from the WISE data logger into a file and then push the file to a web server whenever the log condition is triggered.

The WISE module will push a notification in .Json format to your private server. You can switch the **I/O Log** or **System Log** to **ON**, and the WISE module will then start pushing the latest logged data to the private server.

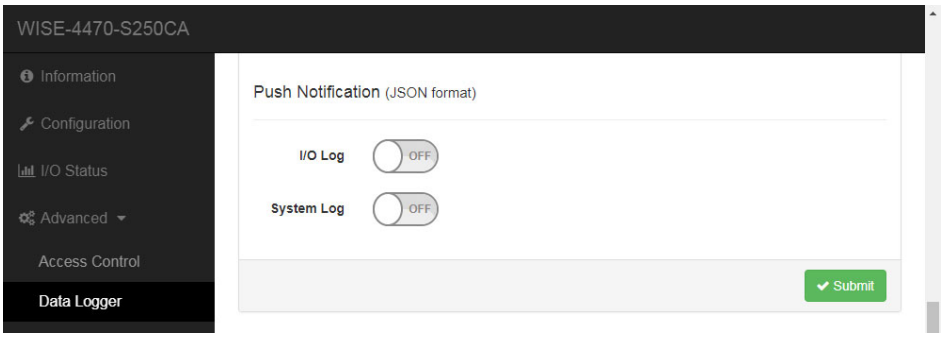

Appendix A

SMS Functions

Besides the cellular internet communication function, WISE-4470 also provides the communication for push system status or control outputs function by SMS message. This chapter shows the format of massage send from WISE-4470 and also the message format to control outputs.

A.1 SMS Configuration

To start up SMS configuration, please ensure below essential information is correct.

Firstly, please make sure PIN status from Cellular Information is READY before the start-up of SMS configuration.

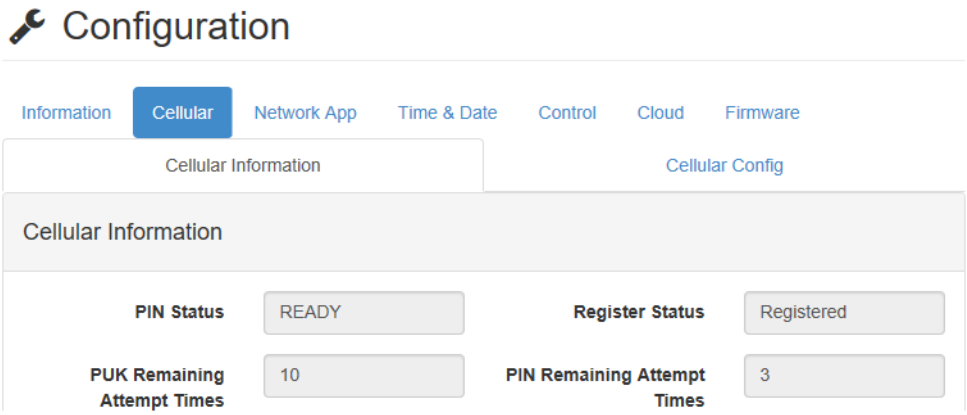

Cellular Configuration tab displays configurable Basic Setting for users to set up SMS function:

- SMS Password: The maximum length of SMS password is 8, which is used to control WISE-4470 via SMS.
- SMS Center: The maximum length of SMS Center is 16, which is the phone number of SMS center depends on each cellular carrier.

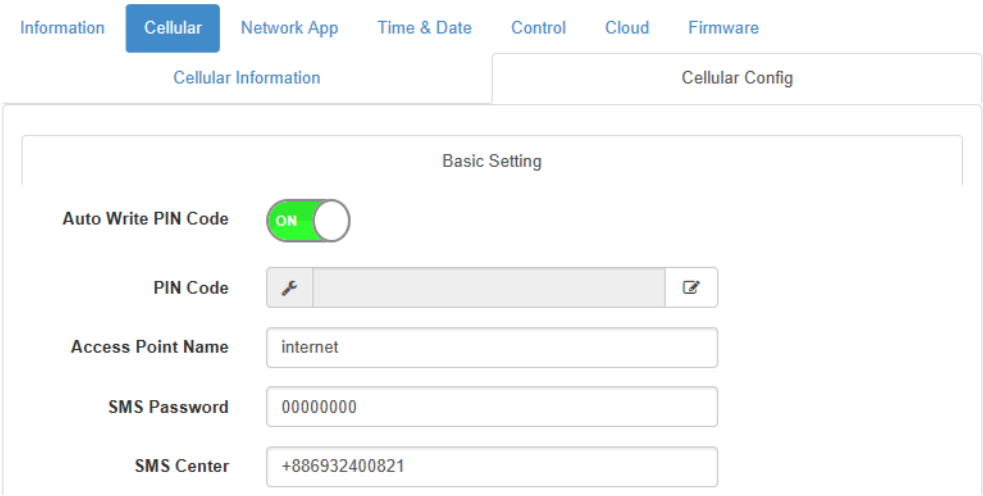

A.2 Access Control for SMS Command

Access Control is configurable through Advanced tab. There are two Access Modes, Alert (Push Message) and Remote Control, where users could enable and disable the phone number to receive alert message or to do remote control via SMS.

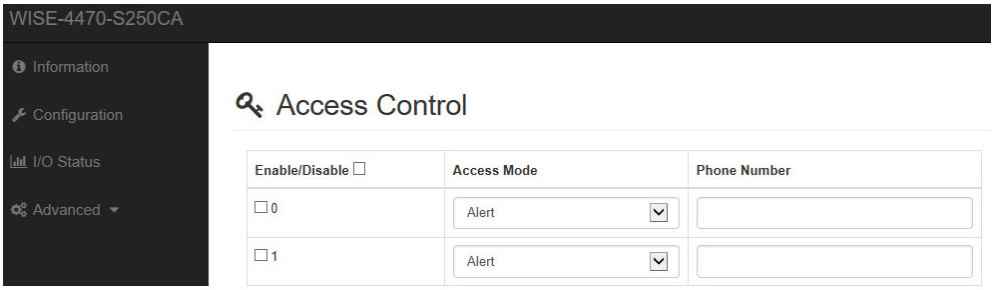

A.3 Message Types & Format

A.3.1 Control Message

Two different types of control message, Reboot and Digital Output, are categorized in this chapter, and there are control format and response format included.

A.3.1.1 Reboot

Control Format

Adv*[Password]*[Function]:[Para1].[Para2].[Para3].[Para4].[Para5].[Para6].[Para7].

Example Adv*00000000*Reboot:

	Remote Reboot	Description
Adv	Prefix	
[Password]	SMS Password	
[Function]	Reboot	Remote control functionality

Response Format

([Type]) [Field]:[Record] [Description]

[Model Name]

[IMEI]

[Timestamp]

Example

(R) 00:00000000 OK

WISE-4470-S250CA

864881025570563

2017-06-13T10:45:42

Message Code	Field	Record
OK	00	00000000

A.3.1.2 Digital Output

Control Format

Adv*[Password]*[Function]:[Para1].[Para2].[Para3].[Para4].[Para5].[Para6].[Para7].

Example Adv*00000000*DOVal:1.0.0.1.0.0.0.0.

	Remote DO Value Control	Description
Adv	Prefix	
[Password]	SMS Password	
[Function]	DOVal	Remote control functionality
[Para1]	Channel Index	1 or 0 if needed
[Para2]	Enable/Disable	1 or 0 if needed
[Para3]	Mode	1 or 0 if needed
[Para4]	Channel Value	1 or 0 if needed
[Para5]	Channel Status	1 or 0 if needed
[Para6]	Pulse Continue Mode	1 or 0 if needed
[Para7]	Pulse Stop	1 or 0 if needed
[Para8]	Pulse Increasement Value	1or 0 if needed

Response Format

([Type]) [Field]:[Record] [Description]

[Model Name]

[IMEI]

[Timestamp]

Example

(R) 00:0000000a Format Error

WISE-4470-S250CA

864881025570563

2017-06-13T10:45:42

The Response of Remote Control		
Message Code	**Field**	**Record**
Remote DO Value Control		
OK	00	00000000
Incorrect PWD	00	00000001
Channel Not Support	00	00000002
Mode Not Matched	00	00000003
IO Board Error	00	00000004
Command Not Support	00	00000005
Set DO Mode Error	00	00000006
Set Pulse Low Width Error	00	00000007
Set Pulse High Width Error	00	00000008
Save IO Table Error	00	00000009
Format Error	00	0000000a
Value Error	00	0000000b

A.3.2 Push Message

A.3.2.1 Push Message Format

There are four message types included in SMS command which are Alert, Event, System and Response. Each of them is composed of type, field, record, description, model name, device IMEI and timestamp. Please refer to the following instruction of the message format.

Push Format

([Type]) [Field]:[Record] [Description]
[Model Name]
[IMEI]
[Timestamp]

Example

(A) 05:00000001 CldPushErr
WISE-4470-S250CA
864881025570563
2017-06-13T10:45:42

Parameter	Description
Type	(A): Alert (E): Event (S): System (R): Response
Field	Refer to A.3.2.2~A.3.2.4
Record	Refer to A.3.2.2~A.3.2.4
Description	Message description
Model Name	WISE-4470-Sxxx
IMEI	Modem IMEI
Timestamp	ISO 8601 (but no time zone)

Table A.1: Parameter

Parameter	Description
Type	(A): Alert (E): Event (S): System (R): Response
Field	Refer to A.3.2.2~A.3.2.4
Record	Refer to A.3.2.2~A.3.2.4
Description	Message description
Model Name	WISE-4470-Sxxx
IMEI	Modem IMEI
Timestamp	ISO 8601 (but no time zone)

Table A.2: Push Message Code List		
Type	**Description**	**Detail**
Alert	3GConnFail	3G connection failed
	CldUpldErr	Cloud upload Error
	CldPushErr	Cloud push Error
	CommWDT	Communication WDT
	IntTblErr	Configuration table error
	IntFlashErr	Internal flash error
System	PwrON	Power ON
	IOMemFull	IO log memory full
	IOMemOvrWr	IO log memory overwrite
	SysMemOvrWr	System log memory overwrite
	FWUpgrade	FW upgrade
Response	OK	Send reboot message successfully
	OK	Set DO value successfully
	Incorrect PWD	Incorrect SMS password
	Channel Not Support	DO channel not support
	Mode Not Matched	DO mode not matched
	IO Board Error	Write to IO board error
	Command Not Support	Command not support
	Set DO Mode Error	Set DO mode error
	Set Pulse Low Width Error	Set Do pulse low width error
	Set Pulse High Width Error	Set DO pulse high width error
	Save IO Table Error	Save IO table error
	Format Error	SMS Format error
	Value Error	Set DO value error

A.3.2.2 Alert

Message Code	Field	Record	
3GConnFail	01	0000	0003
Communication WDT	03	0000	0000
CldUplErr	04	Upper Word	Lower Word
		0: I/O	Error Code See Table A.3.2.5
		1: System	
CldPushErr	05	Upper Word	Lower Word
		0: I/O	Error Code See Table A.3.2.5
		1: System	

A.3.2.3 System

Message Code	Field	Record	
PwrON	07	00000001	Power on
		00000002	System restart
		00000003	Power off
IOMemFull	08	00000001	IO full
IOMemOvrWr		00000002	IO overwrite
SysMemOvrWr		00000003	System overwrite
FWUpgrade	11	Version	Ex: A1.00 B01à0A100B01

A.3.2.4 Response

Message Code	Field	Record
OK	00	00000000
Incorrect PWD	00	00000001
Channel Not Support	00	00000002
Mode Not Matched	00	00000003
IO Board Error	00	00000004
Command Not Support	00	00000005
Set DO Mode Error	00	00000006
Set Pulse Low Width Error	00	00000007
Set Pulse High Width Error	00	00000008
Save IO Table Error	00	00000009
Format Error	00	0000000a
Value Error	00	0000000b

A.3.2.5 Error Code

Common Error Codes	
00	None
01	Host name is invalid
02	DNS query was failed.
03	Connection to host was failed.
04	Disconnect from server abnormally
05	Send header to server failed
06	Send data to server failed
07	Fail to receive response from the server
0a	Other HTTP error code
0b	HTTP 400 Bad request
0c	HTTP 401 Unauthorized
0d	HTTP 403 Forbidden
0e	HTTP 404 Not found
0f	HTTP 409 Conflict
10	HTTP 429 Too many request
11	HTTP 500 Internal error
12	HTTP 503 Service unavailable
13	HTTP 507 Insufficient storage
MQTT Error Codes	
5a	WebSocket connection was unexpectedly aborted.
5b	Receive WebSocket disconnection unexpectedly.
5c	Fail to establish the WebSocket connection.
5d	Fail to send the MQTT CONNECT.
5e	Fail to transmit the MQTT SUBSCRIBE.
5f	Fail to PUBLISH the connection status.
60	Fail to PUBLISH the configuration information.
61	Fail to PUBLISH the data value.
62	MQTT PUBACK was not received.
63	Internal buffer error.
65	MQTT connection refused, unacceptable protocol version.
66	MQTT connection refused, identifier rejected.
67	MQTT connection refused, Server unavailable.
68	MQTT connection refused bad user name or password.
69	MQTT connection refused, not authorized.

Appendix B

iSensing MQTT

MQTT (message queuing telemetry transport) is a publish/subscribe messaging protocol for constrained Internet of Things devices in low-bandwidth, high-latency, or unreliable networks. Advantech iSensing MQTT is Advantech-defined MQTT topic and payload for iSensing and iConnectivity devices, including WISE-4000 wireless I/O, ADAM-6000 Ethernet I/O, and B+B Wizard mesh I/O.

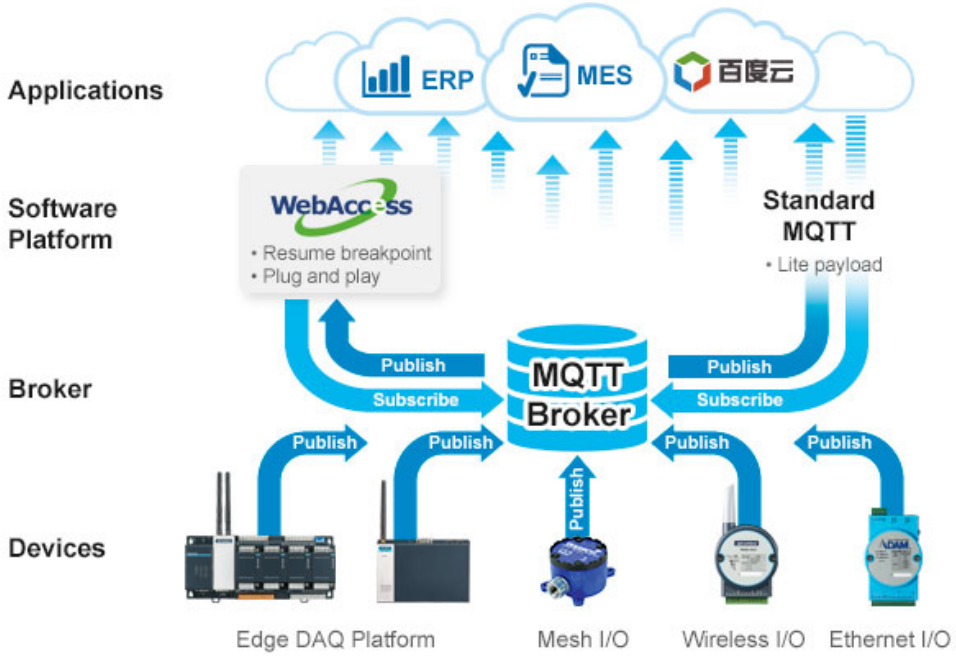

There are two differences between WISE-4000 wireless I/O and ADAM-6000 Ethernet I/O:

1. WISE supports TLS/SSL, but ADAM does not.
2. WISE uses web socket format package, and ADAM uses TCP format package.

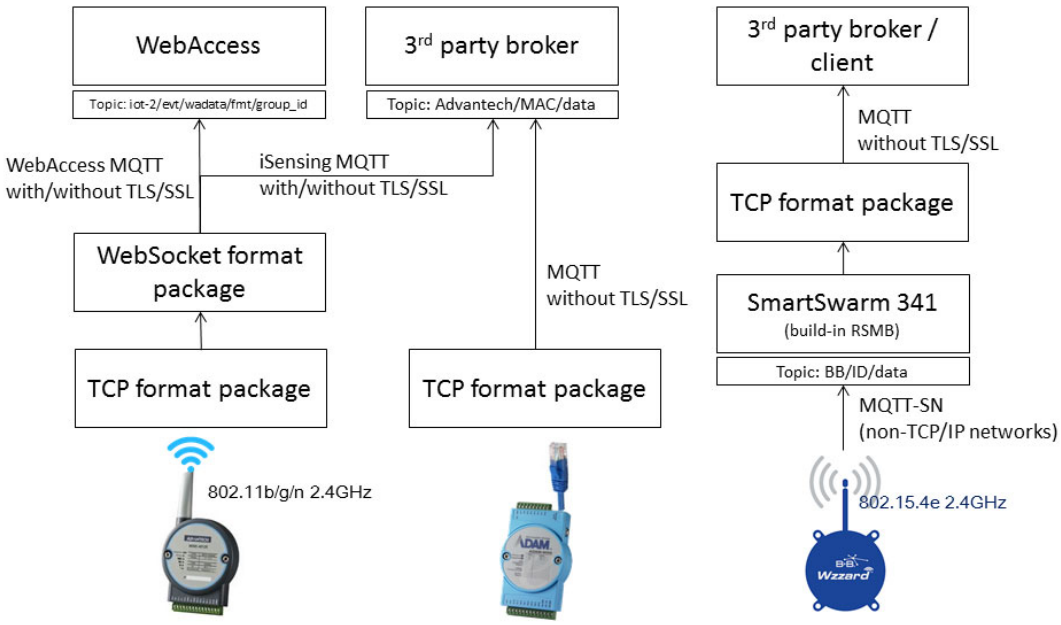

*RSMB, Really Small Message Broker

*802.15.4 technical standard which defines the operation of low-rate wireless personal area networks (LR-WPANs)

B.1 iSensing MQTT Format for publishing

B.1.1 Topic Format: Advantech/MAC_Address/data

Field	Description
Advantech	Vendor of WISE Series
MAC_Address	MAC address of WISE Series
data	Topic for query the data of WISE Series

B.1.2 Payload Format

Field	Abbreviation	Description
Sequence Number	s	Sequence number that updates each time a sensor reading is made 0~9, 0~9, …
Time Stamp	t	ISO 8601 timestamp of the UTC time when the sensor reading was made
Quality	q	Quality of the sensor reading 192: The value is good. There are no special conditions.
Configuration Change	c	Configuration change affecting the reading (e.g., scaling, calibration) 0~9, 0~9, …
Digital Input	di	**Digital Input Mode** true/false **Counter** 0~4294967295 **Frequency Mode** 0~30000 (default unit: 0.1Hz), 0~300000 (default unit: 0.01Hz)
Digital Output	do	Digital Output: true/false
Analog Input	ai	Engineering value of analog input: -10000.000~10000.000 (unit: mV) -20.000~20.000 (unit: mA)
Temperature Sensor	temp	Temperature engineering data, the value is floating type. Unit: According range code For example, 999.120 -> 999.12 °C -3.220 -> -3.22 °C
Temperature Range Code	temprc	4096: Temperature (°C) 4097: Temperature (°F) 4098: Temperature (K)
Humidity Sensor	rh	Humidity engineering data, the value is floating type. Unit: According range code
Humidity Range Code	rhrc	4128: Humiidty (%)

B.1.3 Example

Model Name	JSON Data	Notes

WISE-4012E
(2-DI, 2-DO, 2-AI)
	{
	"s":6,
	"t":"2017-11-03T15:06:16Z",
	"q":192,
	"c":2,
	"di1":true,
	"di2":false,
	"do1":true,
	"do2":false,
	"ai1":-0.763,
	"ai2":-0.763,
	}
		■ The value of di1 and di2 can be: false, true.
		■ The value of do1 and do2 can be: false, true
		■ The value of the sensor in engineering units if ai disable the value is 9999.9999
		"ai_st": AI status number meaning:
		0, AI Channel disable
		1, Streaming
		2, High latch
		3, High momentary
		4, Low latch
		5, Low momentary

WISE-4012
(4-DO, 4-AI)
	{
	"s":6,
	"t":"2017-11-03T15:06:16Z",
	"q":192,
	"c":2,
	"do1":true,
	"do2":false,
	"ai1":-0.763,
	"ai2":-0.763,
	"ai3":-0.763,
	"ai4":-0.763
	}
		■ The value of do1 and do2 can be: false, true
		■ The value of the sensor in engineering units if ai disable the value is 9999.9999
		"ai_st": AI status number meaning:
		0, AI Channel disable
		1, Streaming
		2, High latch
		3, High momentary
		4, Low latch
		5, Low momentary

WISE-4050
(4-DI, 4-DO)
	{
	"s":6,
	"t":"2017-11-03T15:06:16Z",
	"q":192,
	"c":2,
	"di1":true,
	"di2":false,
	"di3":true,
	"di4":false,
	"do1":true,
	"do2":false,
	"do3":true,
	"do4":false,
	}
		■ The value of di1 and di2 can be: false, true.
		■ The value of do1 and do2 can be: false, true

WISE-4060
(4-DI, 4-DO)
	{
	"s":6,
	"t":"2017-11-03T15:06:16Z",
	"q":192,
	"c":2,
	"di1":true,
	"di2":false,
	"di3":true,
	"di4":false,
	"do1":true,
	"do2":false,
	"do3":true,
	"do4":false,
	}
		■ The value of di1 and di2 can be: false, true.
		■ The value of do1 and do2 can be: false, true

WISE-4051
(8-DI, 1-RS-485)
	{
	"s":6,
	"t":"2017-11-03T15:06:16Z",
	"q":192,
	"c":2,
	"di1":true,
	"di2":false,
	"di3":true,
	"di4":false,
	"di5":true,
	"di6":false,
	"di7":true,
	"di8":false,
	}
		■ The value of di1 and di2 can be: false, true.

WISE-4220-S231
(1-Temperature, 1-Humidity)
	{
	"s":6,
	"t":"2017-11-03T15:06:16Z",
	"q":192,
	"c":2,
	"temp1":23.6,
	"temp1rc":4096,
	"rh1":43.6,
	"rh1rc":4128
	}
		■ Temperature and range code in the configured engineering units
		■ The humidity in % unit and range code.

WISE-4470-S250 (6-DI, 2-DO, 1-RS-485)	{"s":1, "t":"2014-07-11T15:26:37Z", "q":192,"c":1, "di1":false,"di2":true "do1":false,"do2":true "p2vffr0001x01":348, "p2v06r0012x05":32768 "p1v01s00b1x03":true, "p1v12s012dx0f":false}	■ The value of di1 and di2 can be: false, true. ■ The value of do1 and do2 can be: false, true ■ The value of coil can be: true, false. ■ The value of register can be 0x0 to 0xFFFF.
WISE-4470-S214 (4-AI, 4-DI)	{"s":1, "t":"2014-07-11T15:26:37Z", "q":192,"c":1, "ai1":-1.234567, "ai_st1":1, "ai2":-123.4567, "ai_st1":2 "di1":false,"di2":true }	■ The value of the sensor in engineering units if ai disable the value is 9999.9999 "ai_st": AI status number meaning: 0, AI Channel disable 1, Streaming 2, High latch 3, High momentary 4, Low latch 5, Low momentary The value of di1 and di2 can be: false, true.
WISE-4470-S250 (6-DI, 2-DO, 1-RS-485)	{"s":1, "t":"2014-07-11T15:26:37Z", "q":192,"c":1, "di1":false,"di2":true "do1":false,"do2":true "p2vffr0001x01":348, "p2v06r0012x05":32768 "p1v01s00b1x03":true, "p1v12s012dx0f":false}	■ The value of di1 and di2 can be: false, true. ■ The value of do1 and do2 can be: false, true ■ The value of coil can be: true, false. ■ The value of register can be 0x0 to 0xFFFF.

WISE-4470-S214 (4-AI, 4-DI)	{"s":1, "t":"2014-07-11T15:26:37Z", "q":192,"c":1, "ai1":-1.234567, "ai_st1":1, "ai2":-123.4567, "ai_st1":2 "di1":false,"di2":true }	■ The value of the sensor in engineering units if ai disable the value is 9999.9999 "ai_st": AI status number meaning: 0, AI Channel disable 1, Streaming 2, High latch 3, High momentary 4, Low latch 5, Low momentary The value of di1 and di2 can be: false, true.

Note! *The channel number on WISE module is "0" based, and the channel number of MQTT topic is "1" based. For example: "DO0" of WISE module use topic "do1"*

B.2 iSensing MQTT Format for subscribing

B.2.1 Topic Format: Advantech/MAC_Address/ctl/doIndex

These topics are used to control the digital outputs on the sensors that support them. These requests need to be published to the broker handling the Sensor network.

Field	Description
Advantech	Vendor of WISE Series
MAC_Address	MAC address of WISE Series
doIndex	The index of the DO channel. Note that the index start with '1'

Note! *The channel number on WISE module is "0" based, and the channel number of MQTT topic is "1" based. For example: "DO0" of WISE module use topic "do1"*

B.2.2 Payload Format

JSON data	Description
{"v":true}	Setup the DO Boolean value as true
{"v":false}	Setup the DO Boolean value as false

Note! *While sending control MQTT command, do not set the retain bit when publishing messages to this topic; otherwise, an old retained message may change the state of the output.*

B.2.3 Example

Model Name	Topic	JSON Data	Description
WISE-4012E (2-DI, 2-DO, 2-AI)	Advantech/MAC_Address/ctl/do1	{"v":true}	The DO0 value will be set as true.
WISE-4050 (4-DI, 4-DO)	Advantech/MAC_Address/ctl/do2	{"v":false}	The DO1 value will be set as false.
WISE-4470-S250UA (6-DI,2-DO, 1-RS-485)	Advantech/MAC_Address/ctl/do3	{"v":false}	The DO2 value will be set as false.
WISE-4470-S250UA (6-DI,2-DO, 1-RS-485)	Advantech/MAC_Address/ctl/do1	{"v":false}	The DO0 value will be set as true.

Note! *The channel number on WISE module is "0" based, and the channel number of MQTT topic is "1" based. For example: "DO0" of WISE module use topic "do1"*

ADVANTECH

Enabling an Intelligent Planet

www.advantech.com

Please verify specifications before quoting. This guide is intended for reference purposes only.
All product specifications are subject to change without notice.
No part of this publication may be reproduced in any form or by any means, electronic, photocopying, recording or otherwise, without prior written permission of the publisher.
All brand and product names are trademarks or registered trademarks of their respective companies.
© Advantech Co., Ltd. 2018