erco&gener

L'esprit Modem

User Guide

GenPro 354e

Reference : EG_GenPro354e_1040R_UG_001_UK

Revision : 001

Date : 02/11/2015

Document History

Rev.	Modifications	Author	Date	Validation	Date
000	Creation	YST	08/06/2015	PBR	10/08/15
001	Minor adjustment on DoC	EFO	02/11/2015	PBR	03/11/2015

The main modifications of this document compared to the previous version are easily identifiable on the screen by the blue color of the text.

Descriptions and non-contractual illustrations in this document are given as an indication only.
ERCOGENER reserves the right to make any modifications.

TABLE OF CONTENTS

PRESENTATION 9
WARNING 10
COPYRIGHT 11
SYMBOLS USED 12
1 SECURITY RECOMMENDATIONS 13
1.1 GENERAL SECURITY 13
1.2 SECURITY IN A VEHICLE 14
1.3 CARE AND MAINTENANCE 14
1.4 YOUR RESPONSIBILITY 14
2 PRESENTATION 15
2.1 CONTENT 15
2.2 MODEM PACKAGING 15
2.3 MECHANICAL CHARACTERISTICS 16
2.3.1 Fixing brackets 16
2.4 CHARACTERISTICS AND SERVICES 17
2.4.1 Services 17
2.5 ENVIRONMENTAL CHARACTERISTICS 19
3 INTERFACES 20
3.1 FRONT SIDE 20
3.2 BACK SIDE 21
3.3 FUNCTIONAL ARCHITECTURE 22
3.3.1 General 22
3.3.2 Functional architecture of optional serial ports 22
3.4 POWER SUPPLY 23
3.4.1 Power supply cables 23
3.4.2 Power supply 8 – 32V_{DC} 23
3.4.2.1 Internal battery 24
3.4.2.2 Consumption of the GenPro 354e 25
3.4.2.3 Power Dimensioning 26
3.5 ONE WIRE BUS 27
3.5.1 One Wire Bus 27
3.5.2 Option Multi 1- Wire Bus S0470D 28
3.6 ANALOG INPUTS ANA1 AND ANA2 29
3.6.1 Analog inputs 0 – 10 V_{DC} 29
3.6.2 Option analog inputs 4 – 20 mA S0475D 30
3.7 OPTO-COUPLED INPUTS 31

3.8 ISOLATED OPTO-COUPLED INPUTS 32
3.9 DIGITAL OUTPUTS 33
3.10 POWER SUPPLY OUTPUT V_{BAT} 34
3.11 BUZZER 35
3.12 SERIAL LINK RS232_0 36
3.13 SERIAL LINK RS232_1 / RS485 37
3.13.1 Serial Link RS232_1 standard 37
3.13.2 RS485 option S0520B 38
3.14 SERIAL LINK RS232_2 / BUS CAN 40
3.14.1 Serial link RS232_2 40
3.14.2 Bus CAN MCP2515 option S0467D 41
3.15 POWER SUPPLY POWER_OUT 42
3.16 BOOT 43
3.17 RESET 44
3.18 ACCELEROMETER 45
3.19 SIM CARD 45
3.20 DUAL SIM OPTION S0471C 45
3.21 LEDS OF THE MODEM 46
3.21.1 GSM Led 46
3.21.1.1 Without application 46
3.21.1.2 With standard library 46
3.21.1.3 The application ERCOGENER EasePro_Vx 46
3.21.1.4 Owner application 46
3.21.2 User Led 47
4 GSM 48
4.1 GSM EXTERNAL ANTENNA 48
5 USE OF THE MODEM 49
5.1 SPECIFIC RECOMMENDATIONS FOR THE USE OF THE MODEM IN VEHICLES 49
5.1.1 Recommended connection on the battery of a truck 49
5.2 TURNING THE MODEM OFF 50
5.3 STARTING WITH THE MODEM 51
5.3.1 Mounting the modem 51
5.3.2 SIM card installation 51
5.4 USE OF THE MODEM 52
5.4.1 Checking the communication with the modem 52
5.4.1.1 Without application 52
5.4.1.2 Standard Library 53
5.4.1.3 The application ERCOGENER EasePro_Vx 53
5.4.1.4 The owner application 54
5.5 CHECKING THE QUALITY OF THE GSM RECEPTION SIGNAL 54
5.6 VERIFICATION OF THE PIN CODE 55

Descriptions and non-contractual illustrations in this document are given as an indication only.
ERCOGENER reserves the right to make any modifications.

5.7 VERIFICATION OF THE MODEM REGISTRATION ON GSM NETWORK 55
5.8 VERIFICATION OF THE MODEM REGISTRATION ON GPRS NETWORK 56
5.9 RECOMMENDED ACCESSORIES 57

6 CLIENT SUPPORT 57

ANNEX 1 – 4-PINS MICRO-FIT CABLE (POWER SUPPLY) 58

ANNEX 2 - 14-PINS MICRO-FIT CABLE (INPUTS/OUTPUTS) 59

ANNEX 3 – 16-PINS MICRO-FIT CABLE (14 WIRES, SERIAL LINKS) 60

ANNEX 4 – 16-PINS MICRO-FIT CABLE (16 WIRES, SERIAL LINKS, BOOT AND RESET) 61

ANNEX 5 - ABBREVIATIONS 62

DECLARATION OF CONFORMITY 66

Descriptions and non-contractual illustrations in this document are given as an indication only.
ERCOGENER reserves the right to make any modifications.

Index of Tables

Table 1 : Mechanical characteristics ... 16
Table 2 : Characteristics and services ... 17
Table 3: Environmental characteristics ... 19
Table 4 : Front side connection ... 20
Table 5 : Effects of power supply defect ... 23
Table 6 : Characteristics of the polymer lithium battery ... 24
Table 7 : Power supply range ... 25
Table 8: Consumption in Low Power mode @ 25 °C without battery charging ... 25
Tableau 9 : Consumption in attached mode @ 25 °C without battery charging ... 25
Tableau 10 : Consumption in data transfer @ 25 °C without battery charging ... 25
Tableau 10 : Consumption in data transfer @ 25 °C without battery charging ... 26
Table 11: Consumption of the battery charge @ 25 °C ... 26
Table 12: One Wire Bus description ... 27
Table 13 : One Wire Bus – Electrical characteristics ... 27
Table 14 : Multi 1- Wire Bus description ... 28
Table 15 : Multi 1- Wire Bus – Electrical characteristics ... 28
Table 16 : Description of analog inputs 0 – 10 V ... 29
Table 17 : Characteristics of analog inputs 0 – 10 V ... 29
Table 18 : Description of analog inputs 4 – 20 mA ... 30
Table 19 : Characteristics of analog inputs 4 – 20 mA ... 30
Table 20 : Description of opto-coupled inputs ... 31
Table 21 : Characteristics of opto-coupled inputs ... 31
Table 22 : Description of isolated opto-coupled inputs ... 32
Table 23 : Characteristics of isolated opto-coupled inputs ... 32
Table 24 : Description of digital outputs ... 33
Table 25 : Characteristics of open collector output ... 33
Table 26 : Description of the power supply V_{BAT} ... 34
Table 27 : Conditions of use of the power supply output V_{BAT} ... 34
Table 28 : Description of buzzer output ... 35
Table 29 : Characteristics of buzzer output ... 35
Table 30 : Example of Transducer tested with the GenPro 354e ... 35
Table 31 : Pins description of serial link RS232_0 ... 36
Table 32 : Characteristics of serial link RS232_0 ... 36
Table 33 : Pins description of serial link RS232_1 ... 37
Table 34 : Characteristics of serial link RS232_1 ... 37
Table 35 : Description of pins of serial link RS485 option S0520B ... 38
Tableau 36 : Characteristics of serial link RS485 option S0520B ... 38
Table 37 : Pins description of serial link RS232_2 ... 40
Table 38 : Characteristics of serial link RS232_2 ... 40
Table 39 : Pins description of the link Bus CAN option S0467D ... 41
Table 40 : Characteristics of serial link Bus CAN MCP2515 option S0467D ... 41

Descriptions and non-contractual illustrations in this document are given as an indication only.
ERCOGENER reserves the right to make any modifications.

Table 41 : Description of Power_Out 42
Table 42 : Characteristics of Power_Out 42
Table 43 : Description of BOOT input 43
Table 44 : Conditions of use of BOOT signal 43
Table 45 : Description of RESET input 44
Table 46 : Conditions of use of RESET signal 44
Table 47: Characteristics of the SIM card power voltage 45
Table 48: Characteristics of the 2nd SIM card power voltage 45
Table 49: Status of GSM LED 46
Table 50 : Characteristics of GSM external antenna 48
Table 51 : RSSI value 54
Table 52 : Verification of PIN code 55
Table 53 : Verification of modem registration on GSM network 55
Table 54 : Verification of the modem registration on GPRS network 56
Table 55 : Characteristics of power supply cable 58
Table 56 : Characteristics of 14-wires inputs/outputs cable 59
Table 57 : Wiring of the 14-wire inputs/outputs cable 59
Table 58 : Characteristics of 14-wires serial links cable 60
Table 59 : Wiring of 14-wire serial links cable 60
Table 60 : Characteristics of the 16-pins serial links cable (Boot + Reset) 61
Table 61 : Wiring of the 16-wires serial links cable (Boot + Reset) 61

Descriptions and non-contractual illustrations in this document are given as an indication only.
ERCOGENER reserves the right to make any modifications.

Index of Figures

Figure 1 : Content 15
Figure 2 : Dimensions 16
Figure 3 : Back side 16
Figure 4 : Front side 20
Figure 5 : Back side 21
Figure 6 : Functional architecture 22
Figure 7 : Architecture of optional serial ports 22
Figure 8 : Consumption max 26
Figure 9 : Internal electrical scheme of the One Wire bus 27
Figure 10 : Internal electrical scheme of analog input 0 – 10 V 29
Figure 11 : Internal electrical scheme of analog input 4 – 20 mA 30
Figure 12 : Internal electrical scheme of opto-coupled inputs 31
Figure 13 : Internal electrical scheme of isolated inputs 32
Figure 14 : Internal electrical scheme of the output 33
Figure 15 : Example of relay control 33
Figure 16 : Example of Transducer tested with the GenPro 354e 35
Figure 17 : Standards signals of serial link RS232_0 36
Figure 18 : Standards signals of serial link RS232_1 37
Figure 19 : Normalized signals of serial link standard RS232_1 with S0520B option 37
Figure 20 : Length of Serial Link RS485 cable option S0520B 38
Figure 21 : Normalized signals of serial link RS485 option S0520B 39
Figure 22 : Standards signals of serial link RS232_2 40
Figure 23 : Output signal of bus CAN MCP2515 option S0467D 41
Figure 24 : Standards signals of link Bus CAN MCP2515 option S0467D 41
Figure 25 : Internal electrical scheme of Power_Out 42
Figure 26 : Drop of voltage 42
Figure 27 : Internal electrical scheme of BOOT 43
Figure 28 : Internal electrical scheme of RESET 44
Figure 29 : Chronogram of RESET signal 44
Figure 30 : Positioning of the accelerometer axis 45
Figure 31 : Back side Leds 46
Figure 32 : GSM external antenna 48
Figure 33 : Recommended connection on the battery of a truck 49
Figure 34 : Mounting the modem 51
Figure 35 : Installation of the modem 51
Figure 36 : 4-wires Micro-FIT cable 58
Figure 37 : Fuse Mini Blade 58
Figure 38 : 14-pins Micro-FIT cable (Inputs/Outputs) 59
Figure 39 : 14-pins Micro-FIT cable (Serial links) 60
Figure 40 : 16-wire Micro-FIT cable (Serial links, Boot and Reset) 61

Descriptions and non-contractual illustrations in this document are given as an indication only.
ERCOGENER reserves the right to make any modifications.

Presentation

Entirely dedicated to embedded data services, the modem GenPro 354e combines the GSM / GPRS / HSPA functions in the same robust casing.

The modem is Quad-Bands (850/900/1800/1900 MHz) GSM/GPRS Class 12.

The modem is six bands (I, II, IV, V, VI, VIII) in UMTS/HSPA.

The GenPro 354e provides 3 operating modes depending on the embedded application:

- External mode (standard): The control is done by an external application. The modem is used with the AT command set (see Commands List EG_EGM_CL_xxx_yy of ERCOGENER).
- Autonomous mode: Once configured, the modem is autonomous; it cyclically registers the positions and automatically transmits them to the client's application via different services: SMS, GSM Data, TCP socket GPRS/UMTS (see EG_EasePro_Vx_CL_yyy_UK of ERCOGENER).
- Specific development mode: the EGM development tool allows the development of additional and customized embedded applications. For more information about the tools and the training, please contact our sales department.

Its protocols of IP connectivity integrated in the embedded application EasePro_Vx, are also available under EGM libraries for a specific development, allowing a quick installation of embedded telematics solutions with strong added-value.

This document describes the modem and provides the following information:

- General presentation,
- Functional description,
- Available basic services,
- Installation and use of the modem (first level),
- Recommended accessories for the use of the modem.

For more information about this document, ERCOGENER puts at your disposal the following elements:

- Commands List
  - External Mode EG_EGM_CL_xxx_yy
  - Autonomous Mode EG_EasePro_Vx_CL_yyy_UK
- Application Note EG_GenPro354e_1040_AN_xxx_yy
- Release Note EG_GenPro354e_1040_RL_xxx_yy
- Client Support (Hot-Line)

Descriptions and non-contractual illustrations in this document are given as an indication only.
ERCOGENER reserves the right to make any modifications.

Warning

- ERCOGENER recommends to read carefully all documents linked to the product GenPro 354e (User Guide, Application Notes, Command List) that can be download on our website www.ercogener.com.
- ERCOGENER cannot be held responsible for:
  - The problems due to an inappropriate use of the GenPro 354e.
  - The problems due to a wrong configuration
  - The problems due to a wrong use of an embedded software application developed or supplied by a third party.
  - The dysfunctions due to the absence or a bad coverage of the GSM, GPRS networks.
  - The dysfunctions if the product is used for the watching of physical persons where human life is engaged.
- ERCOGENER reserves the right to modify the functions of its products "GenPro 354e" and "EasePro" without previous notice.

- To avoid any risk of electrocution, do not open the casing.
- For any functioning, the casing must be closed.
- No internal part can be repaired by the user. The **GenPro 354e** must be returned to the factory for any repair.
- The **GenPro 354e** must be placed in a normally ventilated area, out of sources of heat.
- In order to guarantee the electromagnetic compatibility, the length of the serial cable, the power supply cable and the inputs/outputs cable must not exceed 3 meters.
- The **GenPro 354e** must not be connected directly to the mains supply; a voltage adapter must be used.

SCRAP THE WORN BATTERIES ACCORDING TO INSTRUCTIONS.

Descriptions and non-contractual illustrations in this document are given as an indication only.
ERCOGENER reserves the right to make any modifications.

Copyright

The reproduction, transfer, distribution or storage of part or the totality of the contents of this document, in any form, without the prior written authorization of ERCOGENER is strictly prohibited.

GenPro 354e is a trademark of ERCOGENER.
Hayes is a registered trademark of Hayes Microcomputer Product Inc. The names of products and companies mentioned in this document may be names or trademarks of their respective holders.

The use of some products or services described in this document may require a paying subscription. The availability of some products or services described in this document may change, depending on the configurations and the materials.
In some countries, restrictions of use of the devices may be applied. For more information, thank you to contact your nearest legally qualified local government representative.

ERCOGENER follows a method of continuous development. Consequently, ERCOGENER reserves the right to change and improve any of its products described in this document, without notice.
The contents of this document are provided “as it is”. Except for the applicable obligatory laws, no guarantee in any form, explicit or implicit, including but without being limited to it the implicit guarantees of aptitude to marketing and of appropriateness to a particular use, is granted concerning the precision, the liability or the contents of this document. ERCOGENER reserves the right to revise or withdraw this document at any time and without notice.

ERCOGENER cannot be held responsible for any loss of data or income, as well as particular damage, incidental, consecutive or indirect.

Symbols used

The following symbols are used to highlight the important information of this document.

A symbol for the essential information linked to the module integration and performance.

A warning symbol indicates the actions that could harm or damage the module

Descriptions and non-contractual illustrations in this document are given as an indication only.
ERCOGENER reserves the right to make any modifications.

1 Security recommendations

1.1 General security

It is important to respect the specific regulations linked with the use of radio equipment, in particular with the possible risks of interference due to radio frequency (RF). Please respect carefully the following security recommendations.

Turn OFF your GSM modem:

- On an aircraft, the use of cellular telephones can endanger the plane operations; disturbing the cellular network is illegal. The non-observance of this instruction can lead to the suspension or the exclusion of the cellular phone services, or even to a trial, or both,
- At a refueling station,
- In any area with a potential explosive atmosphere that could cause an explosion or a fire,
- In hospitals and other places where medical equipment may be used.

Restrictions of use of radio equipment in:

- Fuel warehouses,
- Chemical factories,
- Places where destruction operations are in the running,
- Other places where signs indicate that the use of cellular phones is prohibited or dangerous.
- Other places where you should normally turn OFF the engine of your vehicle.

There can be a danger associated with the use of your GSM modem close to insufficiently protected medical equipment such as audio devices and pacemakers.

Consult the manufacturers of medical equipment to know if it is adequately protected.

Using your GSM modem close to other electronic equipment may also cause interferences if the equipment is insufficiently protected.

Pay attention to the warnings and the recommendations of the manufacturers.

The modem is designed to be used with "fixed" and "mobile" applications:

- “Fixed" application: The GSM modem is physically linked to a site and it is not possible to move it easily to another site.
- "Mobile" application: The GSM modem is designed to be used in various places (other than fixed) and is intended to be used in portable applications.
- The modem must be used at more than 20cm from the human body.

This equipment is supplied in Very Low Security Voltage and at non-dangerous energy level.

Descriptions and non-contractual illustrations in this document are given as an indication only.
ERCOGENER reserves the right to make any modifications.

1.2 Security in a vehicle

Do not use your Modem whilst driving, unless equipped with a correctly installed ear-piece/hands-free kit.

Respect the national regulations linked with the use of cellular telephones in vehicles. Road safety is always a priority.

An incorrect installation of the GSM modem in a vehicle could cause an incorrect functioning of the vehicle's electronics. To avoid such problems, make sure that the installation was made by a qualified person. During the installation, a verification of the electronic protection system of the vehicle must be done.

The use of a warning equipment that activates the headlights or the horn of a vehicle on a public highway is not authorized.

1.3 Care and maintenance

The following suggestions will help you to preserve this product for many years.

Do not expose the modem to the extreme environments, to high temperature or high humidity.

Do not use or store the modem in dusty or dirty places, it could be damaged.

Do not try to disassemble the modem, at the risk of cancelation of the guarantee.

Do not expose the modem to water, rain or spilled beverage, it is not impermeable.

Avoid dropping, striking, or shaking the modem violently. The lack of care can damage it.

Do not place the modem next to computer disks, credit or travel cards or other magnetic supports. The information contained on disks or cards can be affected by the modem.

The use of other equipment or accessories not made or not authorized by ERCOGENER can cancel the warranty of the modem.

The battery is not covered by the warranty.

1.4 Your responsibility

This modem is under your responsibility. Treat it with care, it is not a toy. Keep it always in a secure place and out of the reach of children.

Try to remember your PIN and PUK codes. Familiarize yourself with the modem and use the security functions to lock it in case of non-authorized use or in case of theft.

Descriptions and non-contractual illustrations in this document are given as an indication only.
ERCOGENER reserves the right to make any modifications.

2 Presentation

2.1 Content

The GenPro 354e is supplied with:

- a GenPro 354e cardboard packaging,
- a modem GenPro 354e,
- 2 fixing brackets,
- a 4-wire power supply cable, input/output (Red/Black/Yellow/Brown) stripped with fuse.
- a 14-wire stripped cable equipped with a 14-pin connector, Inputs/Outputs stripped.
- a 14-wire cable equipped with a 16-pin connector, with a Sub- D 9 pins and stripped wires.
- a technical sheet (Instructions Sheet).

Figure 1 : Content

2.2 Modem packaging

The external dimensions of the modem packaging are:

- Width .....: 160 mm,
- Height .....: 280 mm,
- Length .....: 64 mm.
- Weight .....: 785 g

2.3 Mechanical characteristics

Table 1 : Mechanical characteristics

Dimensions	95 x 92 x 40 mm (connectors excluded)
Complete dimensions	104 x 92 x 40 mm
Weight	≈ 206 grams (modem only) < 618 grams (modem + brackets + cables)
Volume	≈ 382 cm³
Casing	Aluminum profile
Waterproof level	IP31

The illustration below shows the dimensions of the modem including the clearances necessary for the installation of the modem.

Figure 2 : Dimensions

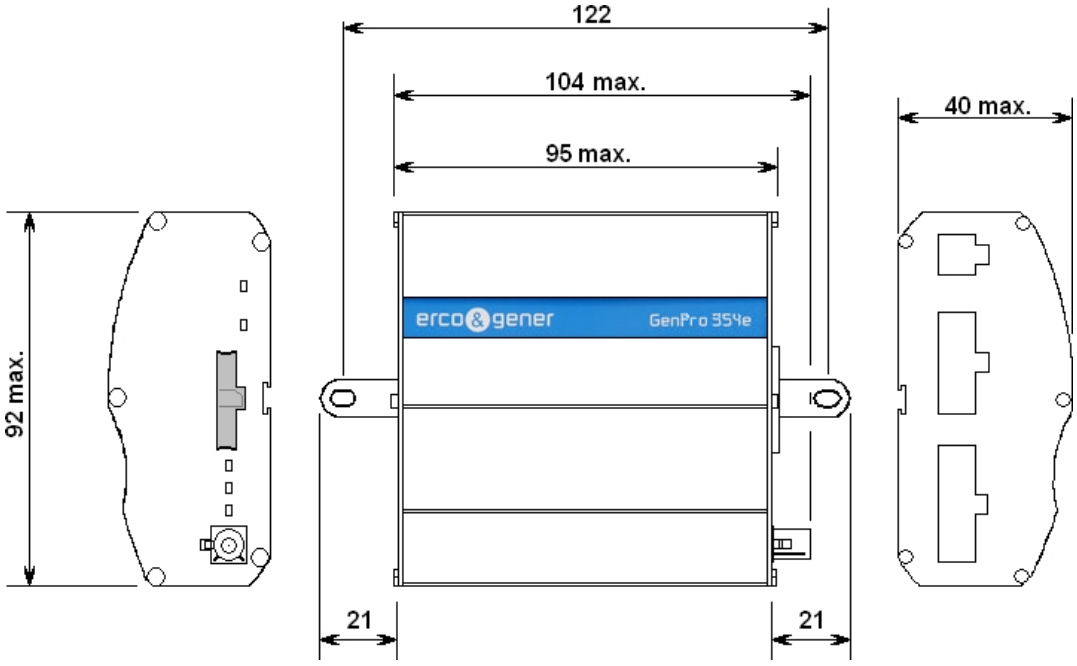

2.3.1 Fixing brackets

2 brackets to fix the modem on a support.

Figure 3 : Back side

2.4 Characteristics and Services

2.4.1 Services

The GenPro 354e is made:

- A GSM/GPRS/EDGE/UMTS modem class12 dedicated to the transmission of binary data in asynchronous and SMS.

The modem characteristics and the available services are summarized in the table below.

Table 2 : Characteristics and services

Fonctions 3G UMTS / HSPA - 2G GSM / GPRS / EDGE		
• UMTS/HSPA	800/850/900/1700/1900/2100 MHz 3GPP Release 7 (HSPA+)	(Bands I, II, IV, V, VI, VIII)
• GSM	4 band 850 / 900 / 1800 / 1900 MHz 3GPP Release 7 PBCCH support	(support GSM / E-GSM / DCS / PCS)
• GPRS	Class 12, CS1-CS4 - up to 86.5 kb/s	
• EDGE	Class 12, MCS1-9 - up to 236.8 kb/s	
• CS	GSM up to 9.6 kb/s WCDMA up to 64 kb/s	
• SMS	MT/MO/CB PDU/Text mode SMS over PSD or CSD	
• WCDMA/HSDPA/HSUPA • GSM / GPRS • EDGE	Power Class 3 Power Class 4 Power Class 1 Power Class E2 Power Class E2	(24 dBm) (33 dBm) for GSM/E-GSM bands (30 dBm) for DCS/PCS bands (27 dBm) for GSM/E-GSM bands (26 dBm) for DCS/PCS bands
• Sensibilité	GSM850/E-GSM900 @ 25 °C DCS1800/PCS1900 @ 25 °C UMTS 800 (band VI) UMTS 850 (band V) UMTS 900 (band VIII) UMTS 1700 (band IV) UMTS 1900 (band II) UMTS 2100 (band I)	-110 dBm, Downlink RF level @ BER Class II < 2.4 % -109 dBm, Downlink RF level @ BER Class II < 2.4 % -111 dBm, Downlink RF level for RMC @ BER < 0.1 % -112 dBm, Downlink RF level for RMC @ BER < 0.1 % -111 dBm, Downlink RF level for RMC @ BER < 0.1 % -111 dBm, Downlink RF level for RMC @ BER < 0.1 % -111 dBm, Downlink RF level for RMC @ BER < 0.1 % -111 dBm, Downlink RF level for RMC @ BER < 0.1 %
Packet Switched Data Rate	HSUPA category 6, up to 5.76 Mb/s HSDPA category 8, up to 7.2 Mb/s WCDMA data up to 384 kb/s DL/UL	
SIM Toolkit		

Interfaces
• GSM antenna: connector FAKRA-D
• Power supply: +8 to +32 V_{DC} (4-pin micro-FIT connector)
• 1 serial port RS232_0 (300 to 115200bds) Sub-D 9 pins female
• 1 serial port RS232_1 (300 to 115200bds)
• 1 serial port RS232_2 (300 to 115200bds)
• AT commands : GSM 07.05 and 07.07
- SIM reader (SIM 3V – 1,8V)
• 3 opto-coupled inputs • 2 isolated opto-coupled inputs • 3 open collector outputs • 2 analog inputs (0 – 10 Volts)
• 1 power supply output V_{POWER} controllable (16-pin connector micro-FIT)
• Inhibition of the battery charge
• 1 Buzzer output (connector 14 pins micro-FIT)
• Backup battery
• 1 port ONE_WIRE
• Power supply output V_{BAT}
• 3-axis accelerometer

Options / Additional accessories *	
• Bus CAN MCP2515	S0467D (See **Figure 7 : Architecture of optional serial ports**)
• ONE WIRE Multi slaves	S0470D
• Double SIM reader	S0471D
• 2 analog inputs (4 – 20 mA)	S0475D
• 1 serial port RS485	S0520B
• Accessories: Antennas, cables, power supplies... (information available on our website)	

* These options are in addition or replace some existing options, contact us (see § **3.3.2 Functional architecture of optional serial ports**)

Descriptions and non-contractual illustrations in this document are given as an indication only.
ERCOGENER reserves the right to make any modifications.

2.5 Environmental characteristics

To ensure a correct operation of the Modem, the specific limits described in the table below must be respected.

Table 3: Environmental characteristics

Operating temperature range	
Battery charging	0 °C to +45 °C
Battery discharging	-20 °C to +45 °C
Storage temperature range	1 year of storage between -20°C to + 35°C 3 months of storage between -20°C to + 45°C 1 month of storage between -20°C to + 60°C
Relative humidity	65 ±20%
Atmospheric pressure	700 hPa to 1060 hPa (-400 m to 3000 m)

Above 45 °C inside the box, the protection of the battery management triggers. The battery will not be charged.

3 Interfaces

3.1 Front side

Figure 4 : Front side

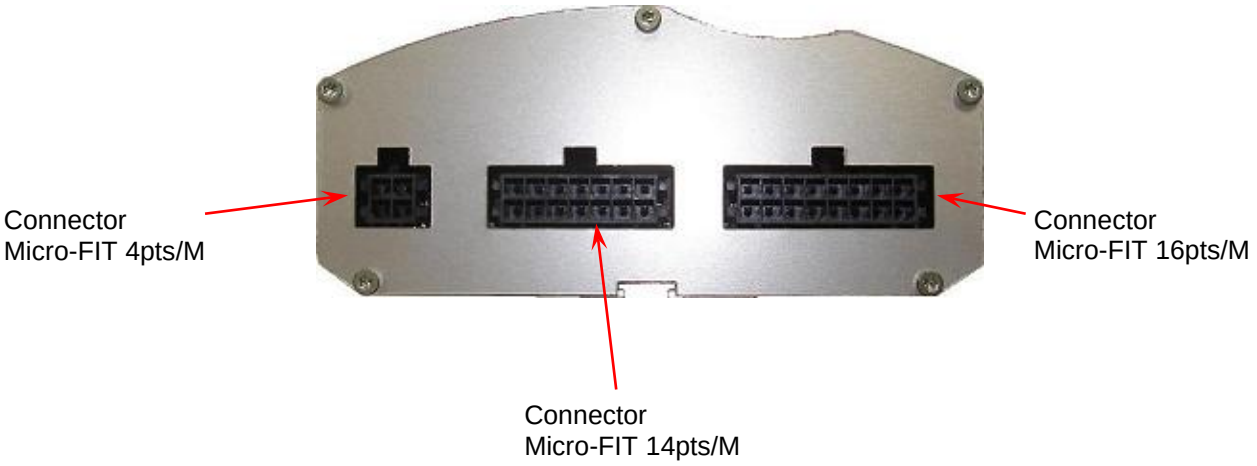

See ANNEX 1 – 4-pin Micro-FIT cable , ANNEX 2 - 14-pin Micro-FIT cable (Inputs/Outputs), ANNEX 4 – 16-pin Micro-FIT cable (16 wire, Serial links, Boot and Reset) and ANNEX 4 – 16-pin Micro-FIT cable (16 wire, Serial links, Boot and Reset) for the wiring of the different connectors.

Table 4 : Front side connection

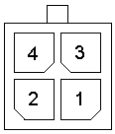

	Micro Fit 4 pins
1	OUTPUT 1 (S1)
2	INPUT 1 (E1)
3	GND
4	$+V_{DC}$

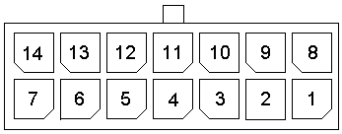

	Micro Fit 14 pins
1	ONE_WIRE
2	ANA2
3	E5-
4	E5+
5	E4
6	S3
7	V_{BAT}
8	GND
9	ANA1
10	E3-
11	E3+
12	E2
13	S2
14	BUZZER

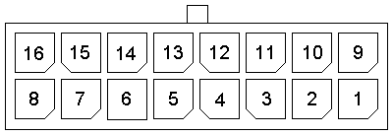

	Micro Fit 16 pins
1	GND
2	--
3	--
4	GND
5	CTS_1
6	Compatible K-Line
7	TX_1
8	RX_1
9	POWER_OUT
10	RESET
11	BOOT
12	GND
13	CTS_0
14	RTS_0
15	TX_0
16	RX_0

Descriptions and non-contractual illustrations in this document are given as an indication only.
ERCOGENER reserves the right to make any modifications.

3.2 Back side

Figure 5 : Back side

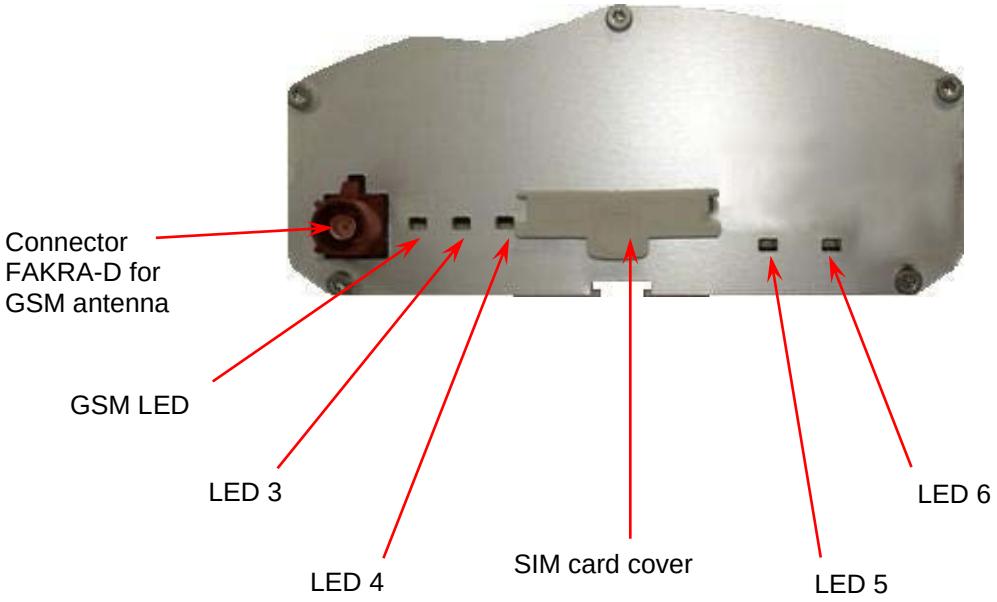

Descriptions and non-contractual illustrations in this document are given as an indication only.
ERCOGENER reserves the right to make any modifications.

3.3 Functional architecture

3.3.1 General

Figure 6 : Functional architecture

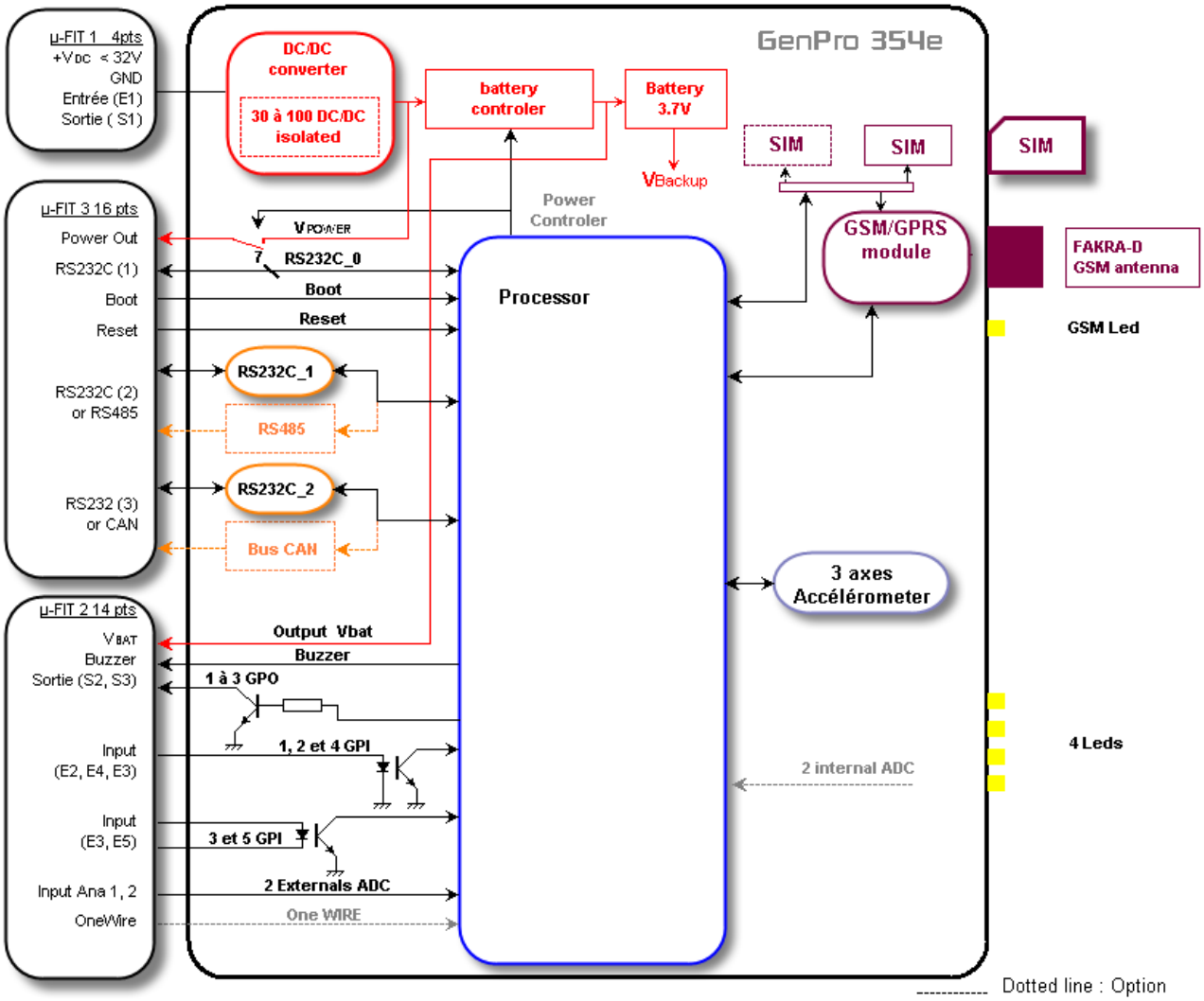

3.3.2 Functional architecture of optional serial ports

Contact us for the setting of the different options.

Figure 7 : Architecture of optional serial ports

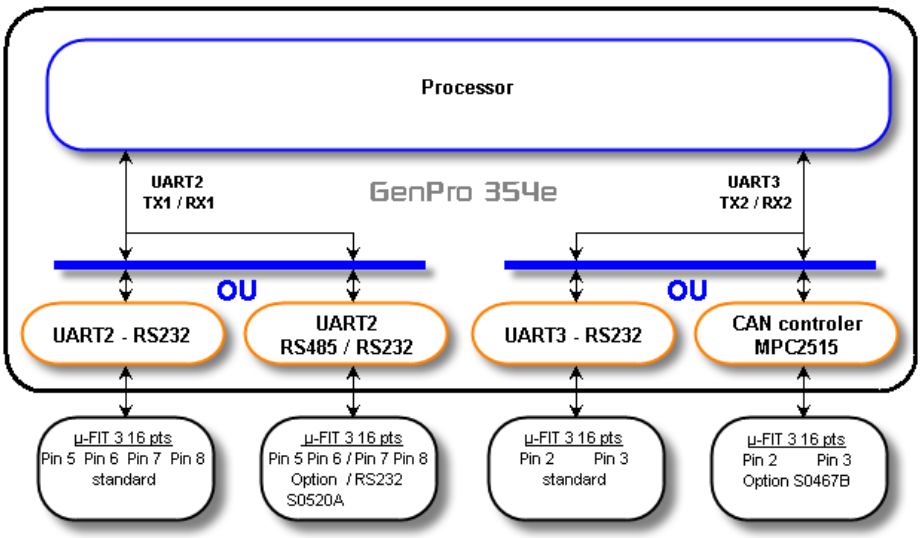

Descriptions and non-contractual illustrations in this document are given as an indication only.
ERCOGENER reserves the right to make any modifications.

3.4 Power supply

If the battery is present, the fact of removing the power supply $+V_{DC}$ will not turn the modem OFF. For this, see the § 5.2 Turning the modem OFF

3.4.1 Power supply cables

The modem is powered with the cable supplied with the equipment (ERCOGENER reference: 4402304215). (See ANNEX 1 – 4-pin Micro-FIT cable (Power supply))

The modem is protected by a fuse F2 A / 32 V directly assembled on the power cable supplied with the modem.

The power cable supplied with the modem must be absolutely used; without this cable, the modem will not be protected.
The pins 1 and 2 are used for the functions Input/Output. The power supply to the modem is done only via the pins 4 ($+V_{DC}$) and 3 (GND).

The modem must be powered by an external DC voltage between $+8V_{DC}$ and $+32V_{DC}$.

The internal regulation is done by a DC/DC converter and allows the supply of all necessary internal DC voltages.

The modem is also internally protected against voltage peaks of more than 32 V_{DC}.

The following table describes the consequences of an overvoltage or drop of voltage on the modem.

3.4.2 Power supply 8 – $32V_{DC}$

The following table describes the consequences of an overvoltage or drop of voltage on the modem.

Table 5 : Effects of power supply defect

	Then:
▪ Voltage falls below 8V	▪ The functioning and the GSM communication are not guaranteed when the remaining capacity of the battery is not sufficient.
▪ Voltage above 32V (Punctual peaks)	▪ The modem guarantees its own protection.
▪ Voltage above 32V (Continuous overvoltage)	▪ The modem is protected by the fuse assembled on the power supply cable.

Descriptions and non-contractual illustrations in this document are given as an indication only.
ERCOGENER reserves the right to make any modifications.

3.4.2.1 Internal battery

This battery allows to maintain the operation of the GenPro 354e in case of absence of its external power supply.

The internal charging circuit allows to keep permanently the charge of the battery from the external power supply.

When the battery is completely discharged, 4 h 30 mn are necessary to obtain a new complete charge. It is normal if the box is becoming a little bit hot in this case.

The autonomy of the battery mainly depends and the mode of use of the GenPro 354e (attachment in GSM/GPRS, Inputs/Outputs, RS232 connected...).

As an information, the autonomy is around in the case where the software management of the battery guarantees that the voltage V_{BAT} does not fall below 3.45V :

- 40 mn with the following conditions GPRS communication 3Rx / 2TX, serial link not connected, no Input Output connected, power max.
- 20 mn with the following conditions WCDMA Band I communication 3Rx / 2TX, serial link not connected, no Input Output connected, power max.
- 14 h with the following conditions GSM attached to GPRS network without data transfer, serial link not connected, no Input Output connected.

When the battery is charged, it is not possible to do an ON/OFF of the device. Only putting the Reset input (pin 10 of the 16-pin Micro-FIT connector) to the Ground or sending the command AT+EGMRST allows a reset of the modem.

When the temperature exceeds 45 °C inside the box, the protection of the battery management triggers. The battery will not be charged.

If the battery is present, prepare the modem for storage or transport conditions, in order to limit high discharges of the battery. For this, see § 5.2 Turning the modem OFF

Table 6 : Characteristics of the polymer lithium battery

Voltage (max.)	4.2V
Type	Lithium Polymer (LiPolymère)
Capacity	1000 mA/h typical
Exp. cycle time	>300 cycles> 70% of the initial capacity
Temperature range	Charge : 0°C to +45°C Discharge : -20°C to +60°C
Protection (Resettable fuse)	Discharge voltage : 2.30V ±0.058V Maximum discharge current : 2A to 4A (1.0±0.3s)

The battery cannot be replaced or modified by the user; the device must never be opened.
For any intervention on the battery: the device must be returned to the factory.
Do not throw the modem and the battery on the fire.

3.4.2.2 Consumption of the GenPro 354e

Table 7 : Power supply range

Power supply range	8 V_{DC} to 32V_{DC}

Table 8: Consumption in Low Power mode @ 25 °C without battery charging

Low Power	**Average I nominal**				**Unit.**
V_{IN}	**8**	**12**	**24**	**32**	**V**
$I_{MOY\ MAX}$	15	10	6	5	mA

Le GenPro 354e is in Low Power mode with the command ***AT+EGLOP=1,xx***.

This Low Power mode is only used with ***EasePro***.

Tableau 9 : Consumption in attached mode @ 25 °C without battery charging

Mode attaché	**$I_{MOY\ MAX.}$**				**Unit.**
V_{IN}	**8**	**12**	**24**	**32**	**V**
GSM 900 / 1 800 MHz	50	30	65	50	mA
GPRS / EDGE	50	30	65	50	mA
3G UMTS / HSPA	55	35	20	16	mA

The GenPro 354e is attached to the network.

Tableau 10 : Consumption in data transfer @ 25 °C without battery charging

								Unit
V_{IN}				**8**	**12**	**24**	**32**	**V**
GSM		**900(1)**	**$I_{MOY\ MAX}$**	240	130	70	50	mA
			$I_{PIC\ MAX}$	1750	750	370	280	mA
		1 800(2)	**$I_{MOY\ MAX}$**	180	100	55	40	mA
			$I_{PIC\ MAX}$	1150	630	310	240	mA
GPRS	**4 Rx / 1 Tx**	**900(1)**	**$I_{MOY\ MAX}$**	250	135	65	55	mA
			$I_{PIC\ MAX}$	1750	750	370	290	mA
		1 800(2)	**$I_{MOY\ MAX}$**	190	105	55	45	mA
			$I_{PIC\ MAX}$	1160	615	310	240	mA
	3 Rx / 2 Tx	**900(1)**	**$I_{MOY\ MAX}$**	430	235	115	90	mA
			$I_{PIC\ MAX}$	1860	770	375	290	mA
		1 800(2)	**$I_{MOY\ MAX}$**	320	180	90	70	mA
			$I_{PIC\ MAX}$	1170	635	315	240	mA
EDGE	**4 Rx / 1 Tx**	**900(3)**	**$I_{MOY\ MAX}$**	250	135	65	55	mA
			$I_{PIC\ MAX}$	1750	750	370	290	mA
		1 800(4)	**$I_{MOY\ MAX}$**	200	115	60	45	mA
			$I_{PIC\ MAX}$	1210	660	320	250	mA
	3 Rx / 2 Tx	**900(3)**	**$I_{MOY\ MAX}$**	430	235	115	90	mA
			$I_{PIC\ MAX}$	1860	770	375	290	mA
		1 800(4)	**$I_{MOY\ MAX}$**	335	190	95	75	mA
			$I_{PIC\ MAX}$	1200	660	330	260	mA

Descriptions and non-contractual illustrations in this document are given as an indication only.
ERCOGENER reserves the right to make any modifications.

Tableau 11 : Consumption in data transfer @ 25 °C without battery charging

							Unit
V_{IN}			8	12	24	32	V
3G UMTS / HSPA(5)	Band I	$I_{MOY\ MAX}$	405	240	125	100	mA
		$I_{PIC\ MAX}$	430	270	150	115	mA
	Band II	$I_{MOY\ MAX}$	480	290	150	115	mA
		$I_{PIC\ MAX}$	510	320	170	135	mA
	Band IV	$I_{MOY\ MAX}$	450	270	140	110	mA
		$I_{PIC\ MAX}$	475	290	155	130	mA
	Band V	$I_{MOY\ MAX}$	350	210	110	85	mA
		$I_{PIC\ MAX}$	370	225	130	100	mA
	Band VIII	$I_{MOY\ MAX}$	370	220	115	90	mA
		$I_{PIC\ MAX}$	410	250	135	110	mA

(1) adapted antenna, RF power max. 33dBm.
(2) adapted antenna, RF power max. 30dBm.
(3) adapted antenna, RF power max. 27dBm.
(4) adapted antenna, RF power max. 26dBm.
(5) adapted antenna, RF power max. 24dBm.

Table 12: Consumption of the battery charge @ 25 °C

Battery charge	Average I nominal				Unit.
V_{IN}	8	12	24	32	V
	185	110	50	40	mA

3.4.2.3 Power Dimensioning

The graph below indicates the maximum peak current. The power supply must be able to supply this current during the GSM "***Burst***".

Figure 8 : Consumption max

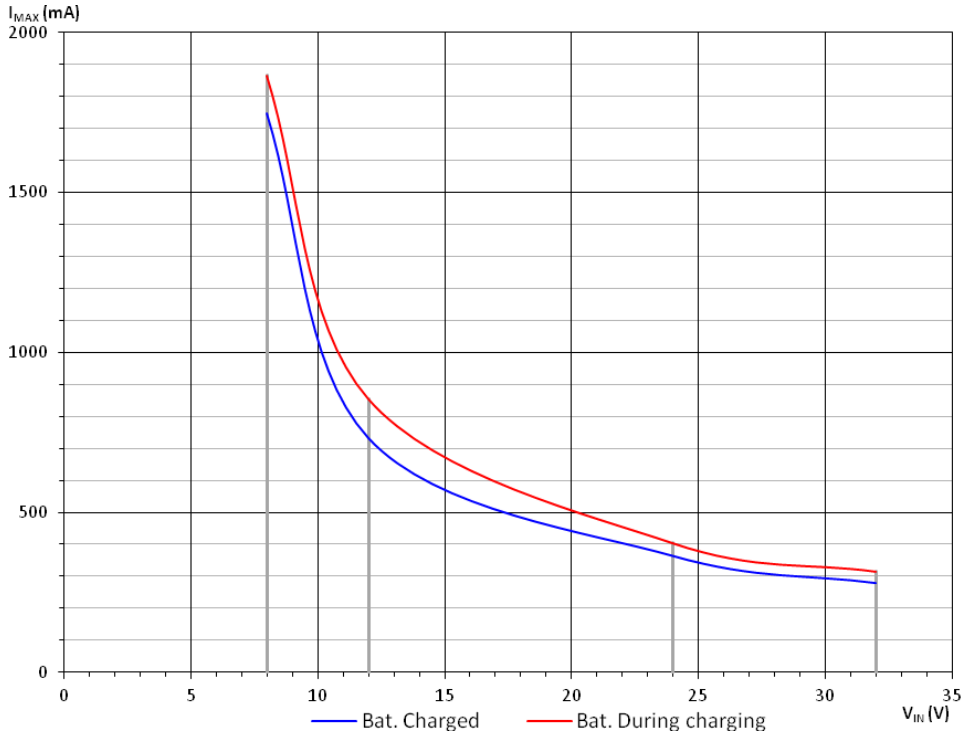

This consumption is not permanent. It corresponds to the burst consumption during GSM communications.

Descriptions and non-contractual illustrations in this document are given as an indication only.
ERCOGENER reserves the right to make any modifications.

3.5 One Wire Bus

3.5.1 One Wire Bus

By default, the One Wire Bus is managed by the processor and only manages « serial number » interface in read-only mode 64 bits.

Table 13: One Wire Bus description

Signal	14-pin connector Pins N°	I/O	Kind of I/O	Description
Bus One Wire	1	I/O	Analog	One Wire Bus
GND	8			

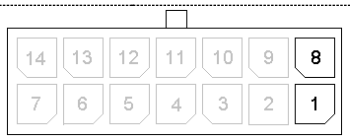

Corresponds to wires
White/green for One Wire Bus
Black for GND
see ANNEX 2 - 14-pin Micro-FIT cable (Inputs/Outputs)

Table 14 : One Wire Bus – Electrical characteristics

Characteristics	Symbols	Conditions	Min.	Typ.	Max.	Unit
Input Voltage – Low	V_{IL}		-0.3		0.8	V_{DC}
Input Voltage – High	V_{IH}		2		3.5	V_{DC}
Hysteresis Voltage	V_{Hys}		0.4		0.7	V_{DC}
Input Leakage Current	I_{LEAK}		-4		38	μA_{DC}
Input capacitance	C_{IN}				14	pF
Output Low-level Voltage	V_{OL}				0.4	V_{DC}
Output High-level Voltage	V_{OH}		2.8			V_{DC}
Output Current	I_o				±16	mA_{DC}

Figure 9 : Internal electrical scheme of the One Wire bus

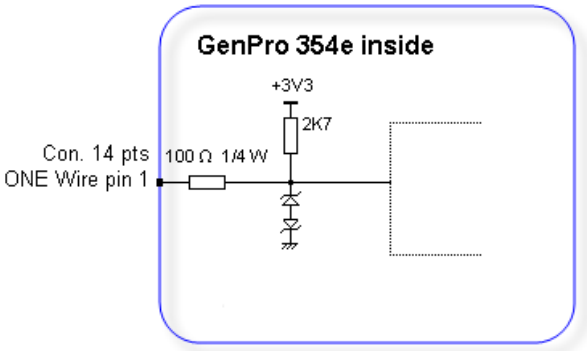

Assembly working with identification keys DS1990 iButton® from the MAXIM manufacturer.

The integrator has the responsibility to protect the input from electrical perturbations and to respect the functioning parameters values.

3.5.2 Option Multi 1- Wire Bus S0470D

This ***Multi 1-Wire*** option, reference ***S0470D***, allows the reading of all 1-wire devices with the possibility to have several devices on the same bus.

This option Multi 1-wire is used wih ***EGM*** library.
Conact us for used with ***EasePro*** application.

Table 15 : Multi 1- Wire Bus description

Signal	14-pin connector Pins N°	I/O	Kind of I/O	Description
Bus One Wire GND	1 8	I/O	Analog	Bus Multi 1- Wire

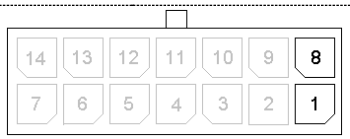

Corresponds to wires
White/green for One Wire Bus
Black for GND
see ANNEX 2 - 14-pin Micro-FIT cable (Inputs/Outputs)

Table 16 : Multi 1- Wire Bus – Electrical characteristics

Characteristics	Symbols	Conditions	Min.	Typ.	Max.	Unit
Input Voltage – Low	V_{IL}		-0.3		0.9	V_{DC}
Input Voltage – High	V_{IH}		1.9		3.3	V_{DC}
Input Leakage Current	I_{LEAK}		-10		10	μA_{DC}
Input capacitance	C_{IN}				10	pF
Output Low-level Voltage	V_{OL}	@ charge 4mA			0.4	V_{DC}
Output High-level Voltage	V_{OH}	@ charge 4mA	2.8		3.3	V_{DC}
Active Pullup On Time [4, 5]	t_{APUOT}		2.3	2.5	2.7	µs
Pulldown Slew Rate [6])	P_{DSRC}		1		4.2	V/µs
Pullup Slew Rate [6])	P_{USRC}		0.8		4	V/µs
Power-On Reset Trip Point	V_{POR}				2.2	V
Write-One/Read Low Time	t_{W1L}		7.6	8	8.4	µs
Read Sample Time	t_{MSR}		13.3	14	15	µs
1-Wire Time Slot	t_{SLOT}		65.8	69.3	72.8	µs
Fall Time High-to-Low [6, 7]	t_{F1}		0.54		3.0	µs
Write-Zero Low Time	t_{W0L}		60	64	68	µs
Write-Zero Recovery Time	t_{REC0}		5.0	5.3	5.6	µs
Reset Low Time	t_{RSTL}		570	600	630	µs
Presence-Detect Sample Time	t_{MSP}		66.5	70	73.5	µs
Sampling for Short and Interrupt	t_{SI}		7.6	8	8.4	µs
Reset High Time	t_{RSTH}		554.8	584	613.2	µs

[4] Active or resistive pullup choice is configurable.
[5] Except for t_{F1}, all 1-Wire timing specifications and t_{APUOT} are derived from the same timing circuit. Therefore, if one of these parameters is found to be off the typical value, it is safe to assume that all these parameters deviate from their typical value in the same direction and by the same degree.
[6] These values apply at full load, i.e., 1nF at standard speed and 0.3nF at overdrive speed. For reduced load, the pulldown slew rate is slightly faster.
[7] Fall time high-to-low (t_{F1}) is derived from P_{DSRC}, referenced from 2.97 V_{DC} to 0.33 V_{DC}.

See Figure 9 : Internal electrical scheme of the One Wire bus

3.6 Analog inputs ANA1 and ANA2

3.6.1 Analog inputs 0 – 10 V_{DC}

Table 17 : Description of analog inputs 0 – 10 V

Signal	14-pin connector Pins N°	I/O	Kind of I/O	Description
ANA1 ANA2 GND	9 2 8	I	Analog	Analog input 0 – 10V
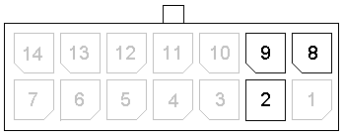	Corresponds to wires Violet for ANA1 Grey for ANA2 Black for GND see ANNEX 2 - 14-pin Micro-FIT cable (Inputs/Outputs)			

Table 18 : Characteristics of analog inputs 0 – 10 V

Characteristics	Symbols	Conditions	Min.	Typ.	Max.	Unit
Analog input	ANA1 / 2		-0.3		12.8	V_{DC}
Conversion range			1.3 µ		10.33	V_{DC}
Polarization current		From 1.3 µV to 10.33 V	0.064		345	$µA_{DC}$
Resolution				10		bits
Linearity				±2		LSB

The integrator has the responsibility to protect the input from electrical perturbations and to respect the functioning parameters values

Figure 10 : Internal electrical scheme of analog input 0 – 10 V

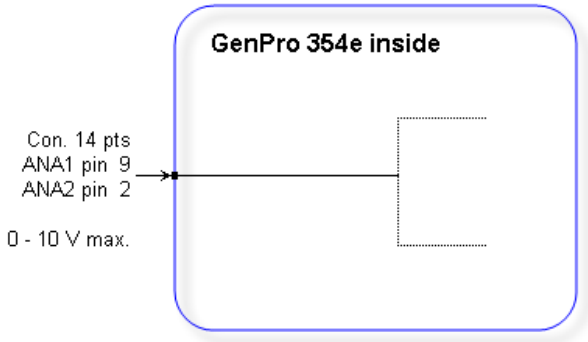

3.6.2 Option analog inputs 4 – 20 mA S0475D

This option ***ANA 4-20mA*** reference ***S0475D*** allows to have a current input.

Table 19 : Description of analog inputs 4 – 20 mA

Signal	14-pin connector Pins N°	I/O	Kind of I/O	Description
ANA1 ANA2 GND	9 2 8	I	Analog	Analog input4 – 20mA
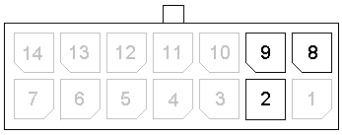	Corresponds to wires Violet for ANA1 Grey for ANA2 Black for GND see ANNEX 2 - 14-pin Micro-FIT cable (Inputs/Outputs)			

Table 20 : Characteristics of analog inputs 4 – 20 mA

Characteristics	Symbols	Conditions	Min.	Typ.	Max.	Unit
Analog input	ANA1 / 2		-0.3		3.8	V_{DC}
Conversion range			0		22	mA_{DC}
Polarization current				20	200	nA_{DC}
Resolution				10		bits
Linearity				±2		LSB

The integrator has the responsibility to protect the input from electrical perturbations and to respect the functioning parameters values.

Figure 11 : Internal electrical scheme of analog input 4 – 20 mA

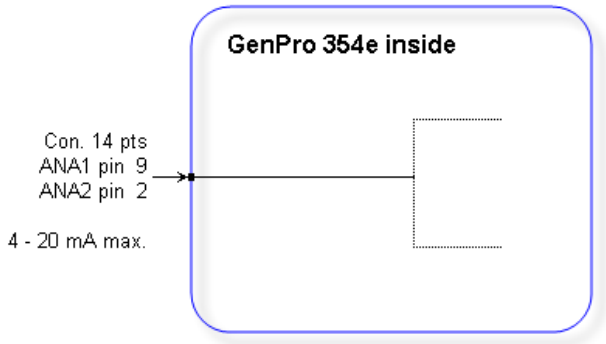

3.7 Opto-coupled inputs

Table 21 : Description of opto-coupled inputs

Signal	Connector Pins N°	I/O	Description
E1 GND E2 E4 GND	2 Connector 4 pins 3 Connector 4 pins 12 Connector 14 pins 5 Connector 14 pins 8 Connector 14 pins	I	Digital Inputs 0 – 35 V
	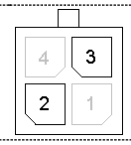		Corresponds to wires Yellow for E2 Black for GND See ANNEX 1 – 4-pin Micro-FIT cable (Power supply)
	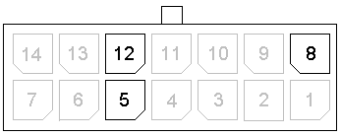		Corresponds to wires Brown for E2 Green for E4 Black for GND See ANNEX 2 - 14-pin Micro-FIT cable (Inputs/Outputs)

Table 22 : Characteristics of opto-coupled inputs

Characteristics	Symbols	Conditions	Min.	Typ.	Max.	Unit
Max. current	$I_{F\ (rms)}$				50	mA
Max.inverted voltage	V_R				5	V
Direct voltage	V_F	I_F = 10 mA	1.0	1.15	1.3	V
Inverted current	I_R	V_R = 5 V			10	µA
Capacity	C_T	V=0, f = 1 MHz	---	30	---	pF
Transfer ratio	I_C / I_F	I_F = 5 mA, V_{CE} = 5 V	50	---	600	%
Saturation of transfer ratio	I_C / $I_{F\ (SAT)}$	I_F = 1 mA, V_{CE} = 0.4 V		60		%
Command voltage			3,5		35	V
Idle voltage					1	V

Figure 12 : Internal electrical scheme of opto-coupled inputs

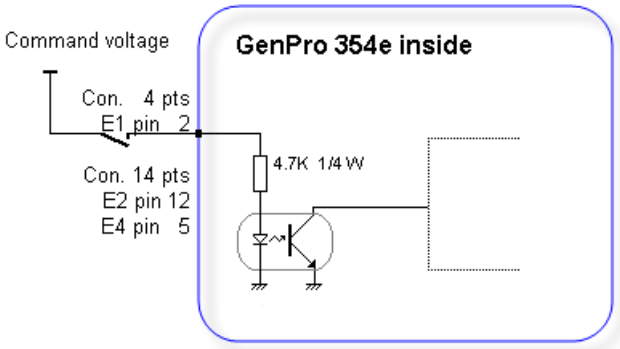

The minimum command voltage for the detection is: **3.5 V**

The maximum command voltage is : **35 V**

3.8 Isolated opto-coupled inputs

To allow any kind of connection, the inputs E3 and E5 have no electrical reference with the board. This allows a more flexible control compared with the different configurations encountered.

Table 23 : Description of isolated opto-coupled inputs

Signal	14-pin connector Pins N°	I/O	Description
E3+ E3- E5+ E5-	11 10 4 3	I	Isolated digital inputs 0 – 35 V
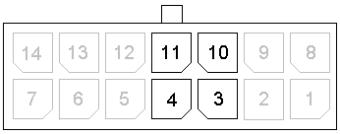			Corresponds to wires Yellow for E3+ Black for E3- Blue for E5+ Black for E5- see ANNEX 2 - 14-pin Micro-FIT cable (Inputs/Outputs)

Table 24 : Characteristics of isolated opto-coupled inputs

The electrical characteristics are the same as in paragraph 3.7 Opto-coupled inputs .
See Table 21 : Characteristics of opto-coupled inputs

Figure 13 : Internal electrical scheme of isolated inputs

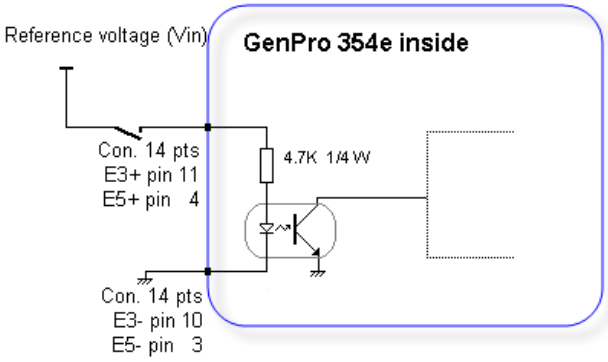

Control via plus

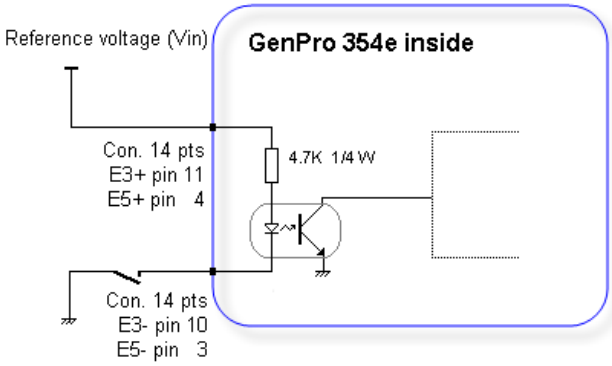

Control via grounding

3.9 Digital outputs

Table 25 : Description of digital outputs

Signal	Connector Pins N°	I/O	Description
S1 S2 S3 GND	1 Connector 4 pins 13 Connector 14 pins 6 Connector 14 pins 8 Connector 14 pins	O	Open collector output
	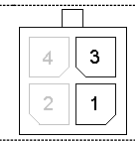		Corresponds to wires Brown for S2 Noir for GND See ANNEX 1 – 4-pin Micro-FIT cable (Power supply)
	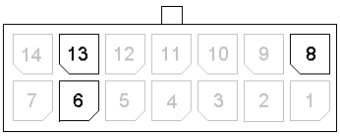		Corresponds to wires White/Brown for S2 White/Yellow for S3 Black for GND see ANNEX 2 - 14-pin Micro-FIT cable (Inputs/Outputs)

Table 26 : Characteristics of open collector output

Characteristics	Symbols	Conditions	Min.	Typ.	Max.	Unit
Max. voltage	V_{CE0}	Transmitter open			48	V_{DC}
Max. voltage	V_{CES}	V_{BE} = 0 V			48	V_{DC}
Collector current	I_C				0.5	A_{DC}
Saturation voltage	V_{CEsat}	I_C = 500 mA			1.3	V_{DC}
Dissipation	P_{Ttot}	$T_{amb} \leq 25$ °C, T_j = 110 °C			0.78	W

Figure 14 : Internal electrical scheme of the output

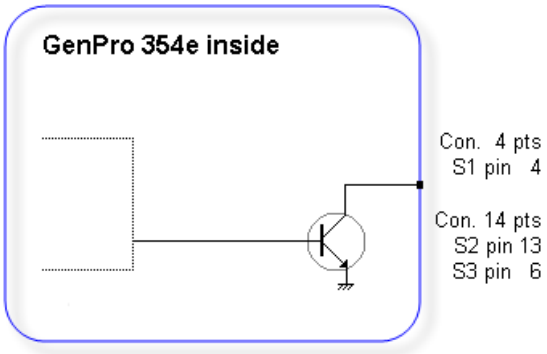

No protection is ensured. The user must respect the values of the table below.

Figure 15 : Example of relay control

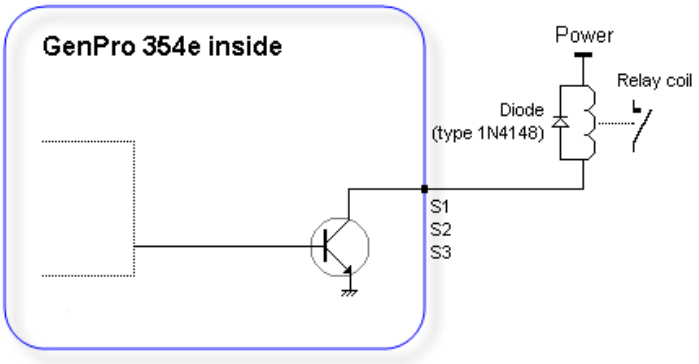

3.10 Power supply output V_{BAT}

Table 27 : Description of the power supply V_{BAT}

Signal	14-pin connector Pins N°	I/O	Kind of I/O	Description
V_{BAT} GND	7 8	O	Analog	Output voltage $3.45\ V_{DC} \leq V_{BAT} \leq 4.5\ V_{DC}$.
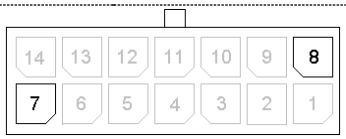		Corresponds to wires Orange for V_{BAT} Black for GND see ANNEX 2 - 14-pin Micro-FIT cable (Inputs/Outputs)		

Table 28 : Conditions of use of the power supply output V_{BAT}

Parameters	Condition	Min.	Typ.	Max.	Unit
V_{OUT}	Without power supply [1]	3.45		4.0	V_{DC}
	With power supply 8V - 32V	4.2		4.4	V_{DC}
I_{OUT}	Max.			100 [2]	mA_{DC}

[1] The GenPro 354e works with its battery only. In the case where the voltage V_{BAT} falls below 3.45V, the product cannot communicate anymore via the network.

[2] In the case where the software management of the battery guarantees that the voltage V_{BAT} does not fall below 3.45V. In case of low battery ($V_{BAT} < 3.45V$) or high discharge ($V_{BAT} = 2.8V$), and in order to guarantee a restart of the product, the consumption on this output must not exceed 50 mA.

2.8V is the self-protection limit of the battery. From this moment, the battery puts itself under protection, and the output voltage becomes null.
When the battery is not connected, the output voltage is $4.2V \leq V_{OUT} \leq 4.4$ V as long as the power supply $+V_{DC}$ is present.

3.11 Buzzer

By default, the GenPro 354e provides a Buzzer output on the output 14 of the 14-pin connector. This PWM output provides a frequency; it is then dedicated to drive a **Transducer**.

Table 29 : Description of buzzer output

Signal	14-pin connector Pins N°	I/O	Kind of I/O	Description
BUZZER GND	14 8	O	Analog	Buzzer output
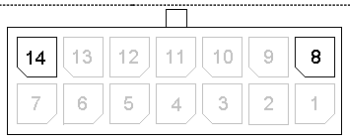		Corresponds to wires Red for BUZZER Black for GND see ANNEX 2 - 14-pin Micro-FIT cable (Inputs/Outputs)		

Table 30 : Characteristics of buzzer output

Characteristics	Symbols	Conditions	Min.	Typ.	Max.	Unit
collector-base voltage	V_{CB0}	Transmitter open			48	V_{DC}
collector-emitter voltage	V_{CE0}	Open base			40	V_{DC}
collector current (DC)	I_C				600	mA_{DC}
peak collector current	I_{CM}				800	mA_{DC}
Collector Cutoff Current	I_{CB0}	IE = 0; VCB = 60 V; Tj = 25 °C			10	nA_{DC}
		IE = 0; VCB = 60 V; Tj = 125 °C			10	μA_{DC}
collector-emitter saturation voltage	V_{CEsat}	IC = 150 mA; IB = 15 mA *			300	mV_{DC}
		IC = 500 mA; IB = 50 mA *			1	V_{DC}
transition frequency	f_T	IC = 20 mA; VCE = 20 V; f = 100 MHz			300	MHz
collector capacitance	C_C	$I_E = I_e = 0$; VCB = 10 V; f = 1 MHz			8	pF
total power dissipation	P_{Ttot}	$T_{amb} \leq 25$ °C			225	mW

* Pulse test: tp ≤ 300 µs; δ ≤ 0.02.

Table 31 : Example of Transducer tested with the GenPro 354e

Buzzer characteristics	Values
Type	Transducer AT-2720-T-R
Consumptions	1-30V peak/3.5mA max.
Resonance frequency	2.048Hz ±500HZ
Sound pressure level (SPL)	Min.88dBA @10cm

Figure 16 : Example of Transducer tested with the GenPro 354e

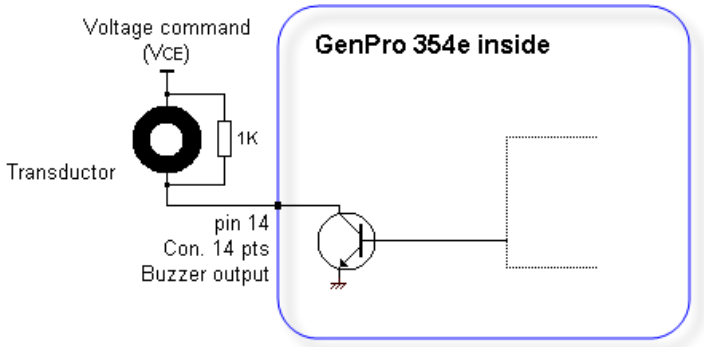

3.12 Serial link RS232_0

Table 32 : Pins description of serial link RS232_0

Signal	16-pin Micro FIT connector Pins N°	I/O	RS232 Standards	Description	9-pin Sub D connector Pins N°
CT103 / TX_0	15	I	TX	Data transmission	3
CT104 / RX_0	16	O	RX	Data reception	2
CT105 / RTS_0	14	I	RTS	Request to send	7
CT106 / CTS_0	13	O	CTS	Ready to send	8
GND	12			Ground	5

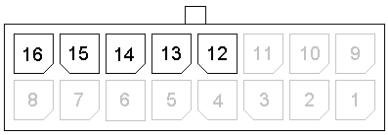

Corresponds to wires
Green for TX
Blue for RX
Yellow for RTS
Brown for CTS
Black for GND
see ANNEX 3 – 16-pin Micro-FIT cable (14 wire, Serial links)

Table 33 : Characteristics of serial link RS232_0

Characteristics	Symbols	Conditions	Min.	Typ.	Max.	Unit
Input Voltage – Range	V_{INPUT}	Input Voltage – Range	-25		+25	V_{DC}
Input Voltage – Low	V_{IL}	Input Voltage – Low	0.6	1.1		V_{DC}
Input Voltage – High	V_{IH}	Input Voltage – High		1.5	24	V_{DC}
Input Hysteresis	V_{Hys}	Input Hysteresis		0.5		V_{DC}
Input Resistance	R_{in}	Input Resistance	3	5	7	KΩ
Output Voltage	V_{OUT}	All transmitter outputs loaded with 3 kΩ to ground	±5	±5.4		V_{DC}
Transmitter Output Resistance	R_{OUT}		300	50k		Ω
RS-232 Output Short-Circuit Current	I_{CC}				±60	mA

Figure 17 : Standards signals of serial link RS232_0

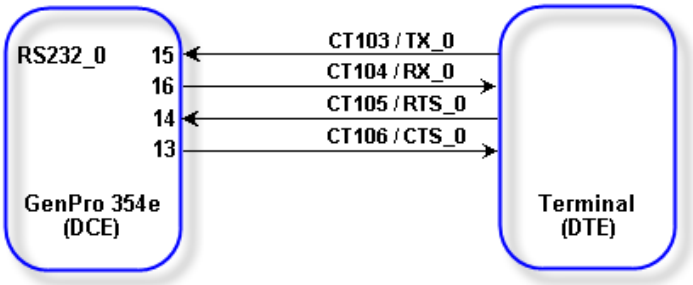

3.13 Serial link RS232_1 / RS485

3.13.1 Serial Link RS232_1 standard

Table 34 : Pins description of serial link RS232_1

Signal	16-pin Micro FIT connector Pins N°	I/O	RS232 Standards	Description
CT103 / TX_1	7	I	TX	Data transmission
CT104 / RX_1	8	O	RX	Data reception
CT105 /RTS_1	6	I	RTS	Request to send
CT106 / CTS_1	5	O	CTS	Ready to send
GND	4			Ground

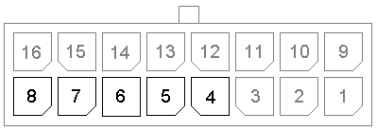

Corresponds to wires
White/Green for TX
White/Blue for RX
White/Yellow for RTS
White/Brown for CTS
Black for GND
see ANNEX 3 – 16-pin Micro-FIT cable (14 wire, Serial links)

Table 35 : Characteristics of serial link RS232_1

Characteristics	Symbols	Conditions	Min.	Typ.	Max.	Unit
See Table 32 : Characteristics of serial link RS232_0						

Figure 18 : Standards signals of serial link RS232_1

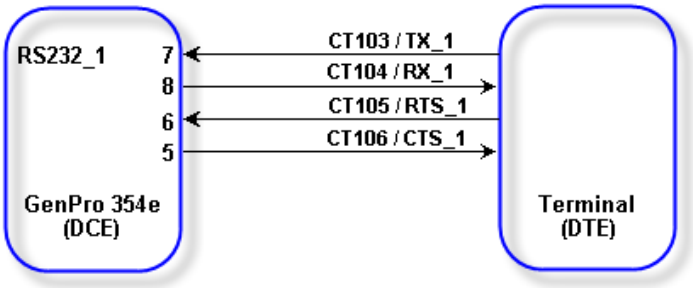

When the S0520B option (RS485) is present the RTS and CTS signals are not available.

Figure 19 : Normalized signals of serial link standard RS232_1 with S0520B option

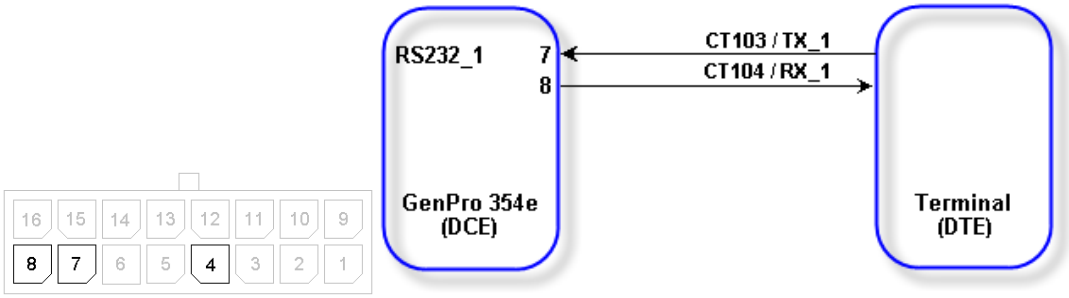

3.13.2 RS485 option S0520B

Table 36 : Description of pins of serial link RS485 option S0520B

Signal	Connector Micro FIT 16 points Pin number	I/O	Norme RS485	Description
A+	6	I/O	A/Y	I/O no inverted
B-	5	I/O	B/Z	I/O inverted
GND	4			Ground

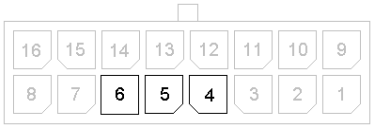

Wire color
White /Yellow for A+
White/Brown for B-
Black for GND
See ANNEX 3 – 16-pin Micro-FIT cable (14 wire, Serial links)

Tableau 37 : Characteristics of serial link RS485 option S0520B

Characteristics	Symbols	Conditions	Min.	Typ.	Max.	Unit
Interface voltage (A or B)	V_{IO}		-8		13	V_{DC}
Differential Voltage (A or B)	ΔV_{IO}		-5		+5	V_{DC}
Driver						
Differential Output Voltage	V_{OD}		1,5	2,2	3	V_{DC}
Differential Output Voltage for Complementary Output States	ΔV_{OD}				0,2	V_{DC}
Driver Common Mode Output	V_{OC}			2	3	V_{DC}
Common Mode Output Voltage for Complementary Output States	ΔV_{OC}				0,2	V_{DC}
Short-Circuit Current	I_{OSD}	–7V ≤ (A or B) ≤ 12V			±250	mA
Receiver						
Input Current (A, B)	I_{IN}	–7V ≤ (V_{IN}) ≤ 12V	-100		125	µA
Differential Input Threshold Voltage	V_{TH}	–7V ≤ (V_{IN}) ≤ 12V			±0,2	V_{DC}
Input Hysteresis	ΔV_{TH}	B = 0V		15		mV_{DC}
Output High Voltage	V_{OH}	I_O = –4mA, A-B = 200mV		2,4		V_{DC}
Output Low Voltage	V_{OL}	I_O = –4mA, A-B = 200mV			0,4	V_{DC}

Figure 20 : Length of Serial Link RS485 cable option S0520B

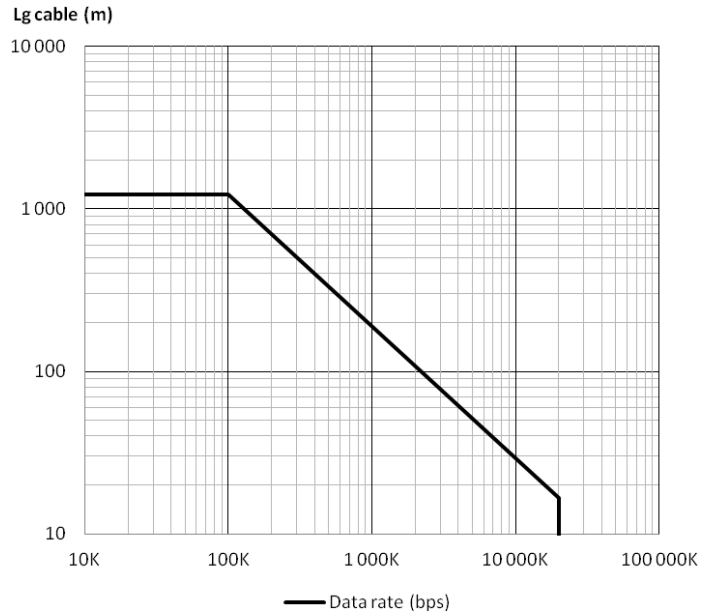

Figure 21 : Normalized signals of serial link RS485 option S0520B

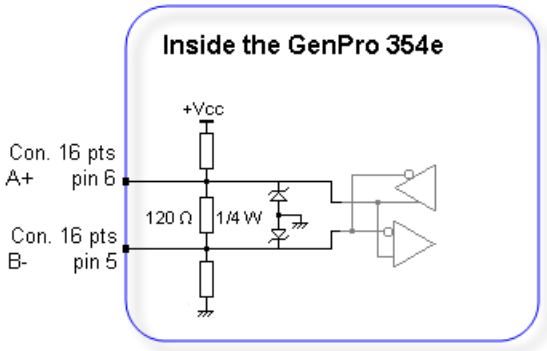

3.14 Serial link RS232_2 / Bus CAN

This third serial link is

- RS232c - ***standard***.
- CAN Bus - Option ***MCP2515 CAN Bus***, reference ***S0467D***.

These 2 options cannot be installed simultaneously.

3.14.1 Serial link RS232_2

Table 38 : Pins description of serial link RS232_2

Signal	16-pin Micro FIT connector Pins N°	I/O	RS232 Standards	Description
CT103 / TX_2	2	I	TX	Data transmission
CT104 / RX_2	3	O	RX	Data reception
GND	1			Ground

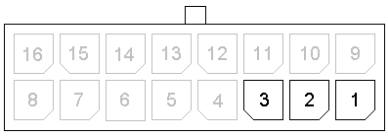

Corresponds to wires
Violet for TX
White/Violet for RX
Black for GND
see ANNEX 3 – 16-pin Micro-FIT cable (14 wire, Serial links)

Table 39 : Characteristics of serial link RS232_2

Characteristics	Symbols	Conditions	Min.	Typ.	Max.	Unit
See Table 32 : Characteristics of serial link RS232_0						

Figure 22 : Standards signals of serial link RS232_2

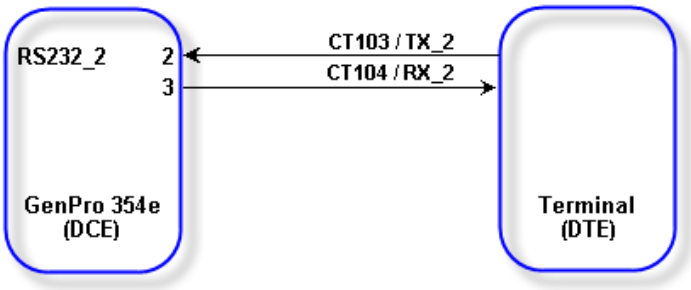

3.14.2 Bus CAN MCP2515 option S0467D

The data transmission is done on a differential wired pair. The line is made up of 2 wires.

Table 40 : Pins description of the link Bus CAN option S0467D

Signal	16-pin Micro FIT connector Pins N°	I/O	CAN Standards	Description
CANH	2	I/O	CAN High	Positive differential line
CANL	3	O/O	CAN Low	Negative differential line
GND	1			Ground

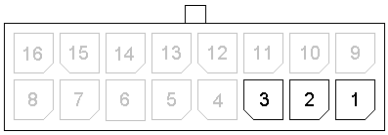

Corresponds to wires
Violet for CANH
White/Violet for CANL
Black for GND
see ANNEX 3 – 16-pin Micro-FIT cable (14 wire, Serial links)

Table 41 : Characteristics of serial link Bus CAN MCP2515 option S0467D

Characteristics	Symbols	Conditions	Min.	Typ.	Max.	Unit
Input Voltage – Low	V_{IL}	Input Voltage – Low	0.6	1.1		V_{DC}
Input Voltage – High	V_{IH}	Input Voltage – High		1.5	3.3	V_{DC}
Input Hysteresis	V_{Hys}	Input Hysteresis		0.1		V_{DC}
Leak current	I_L		±30			µA
Output Short-Circuit Current	I_{OS}				±250	mA
Output voltage	V_{OH}	CANH Dominant	2.45		3.3	V_{DC}
		CANL Dominant	0.5		1.25	V_{DC}
	V_{OL}	CANH Recessive		2.3		V_{DC}
		CANL Recessive		2.3		V_{DC}

Figure 23 : Output signal of bus CAN MCP2515 option S0467D

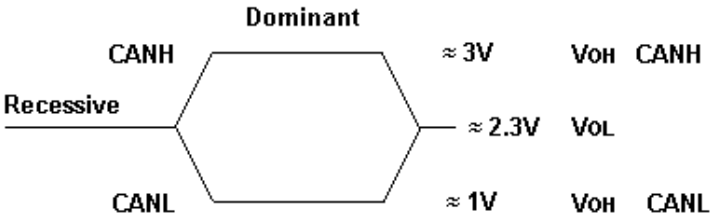

Figure 24 : Standards signals of link Bus CAN MCP2515 option S0467D

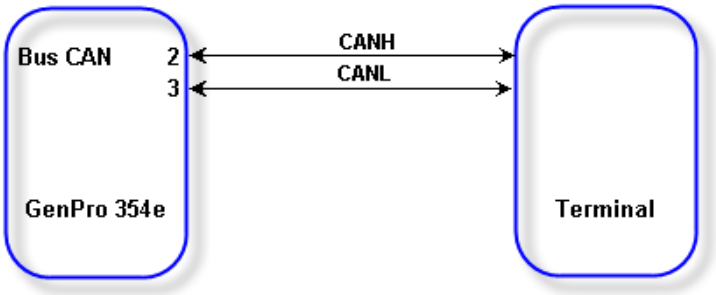

3.15 Power supply Power_Out

This power supply Power_Out is controlled by software

Table 42 : Description of Power_Out

Signal	16-pin connector Pins N°	I/O	Kind of I/O	Description
Power_Out GND	9 12	O	Analog	
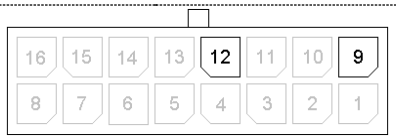		Corresponds to wires White Power_Out Black for GND see ANNEX 3 – 16-pin Micro-FIT cable (14 wire, Serial links)		

Table 43 : Characteristics of Power_Out

Parameters	Condition	Min.	Typ.	Max.	Unit
V_{OUT}	With power supply 8V - 32V @ 1A	6.2		30.5	V_{DC}
R_{OUT}			45	70	mΩ
I_{OUT}				1	A

Figure 25 : Internal electrical scheme of Power_Out

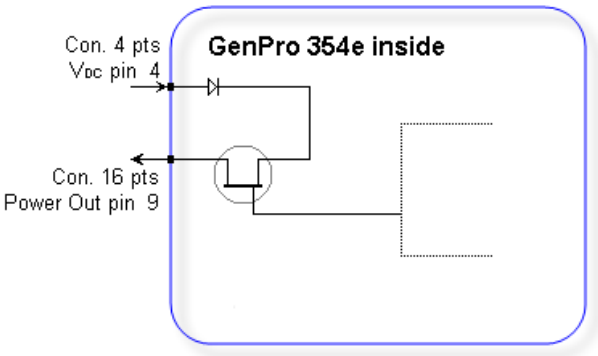

The graph below shows a drop of voltage due to the serial diode and the transistor.

Figure 26 : Drop of voltage

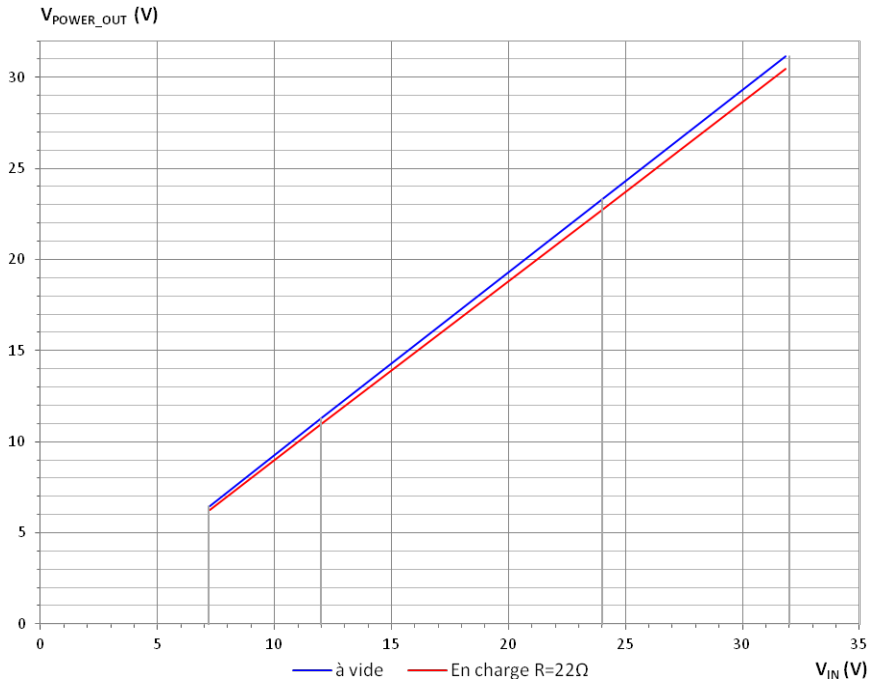

3.16 BOOT

This signal must NOT be connected, NOT used. The use of the BOOT function is strictly reserved for the manufacturer and distributors.

Table 44 : Description of BOOT input

Signal	16-pin connector Pins N°	I/O	Kind of I/O	Description
BOOT GND	11 4	I	SCHMITT	Boot modem
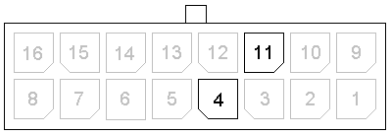		Corresponds to wires Green for BOOT Black for GND see ANNEX 4 – 16-pin Micro-FIT cable (16 wire, Serial links, Boot and Reset)		

Table 45 : Conditions of use of BOOT signal

Parameters	Conditions	Min.	Typ.	Max.	Unit
VIL	Input Voltage – Low	-0.3		0.8	V_{DC}
VIH	Input Voltage – High	2		3.3	V_{DC}
RIPU	Internal Pull-Up Resistor		5.38K		Ω

Figure 27 : Internal electrical scheme of BOOT

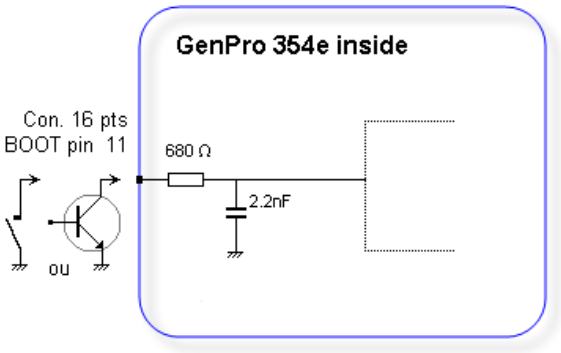

The use of the BOOT signal must be done through a transistor assembly or via dry contact. The integrator has the responsibility to protect the input from electrical perturbations and to respect the functioning parameters values.

3.17 RESET

The use of the RESET function is strictly reserved for the manufacturer and distributors. This signal must be used only in case of emergency RESET. A software RESET is always preferable to a Hardware RESET. It is strongly unadvised to execute this function whilst in communication or dialog, without having previously detached it from the operator network. Using the RESET does not restore the factory parameters.

Table 46 : Description of RESET input

Signal	16-pin connector Pins N°	I/O	Kind of I/O	Description
RESET GND	10 4	I	SCHMITT	Reset modem
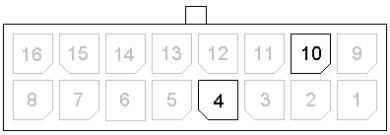		Corresponds to wires Orange for RESET Black for GND see ANNEX 4 – 16-pin Micro-FIT cable (16 wire, Serial links, Boot and Reset)		

Table 47 : Conditions of use of RESET signal

Parameters	Conditions	Min.	Typ.	Max.	Unit
VIL	Input Voltage – Low	-0.3		0.8	V_{DC}
VIH	Input Voltage – High	2		3.3	V_{DC}
RIPU	Internal Pull-Up Resistor		5.38K		Ω

Figure 28 : Internal electrical scheme of RESET

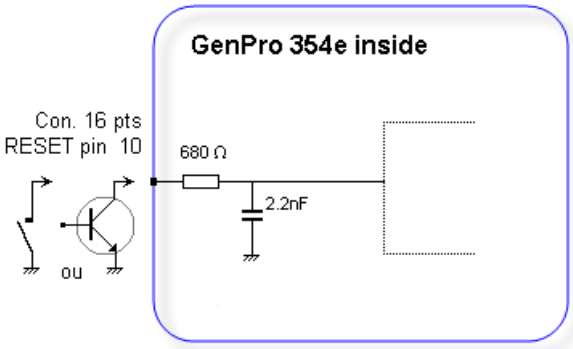

The use of the RESET signal must be done through a transistor assembly or via dry contact . The integrator has the responsibility to protect the input from electrical perturbations and to respect the functioning parameters values.

Figure 29 : Chronogram of RESET signal

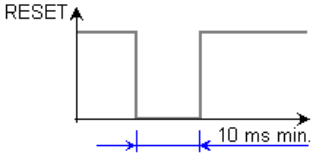

3.18 Accelerometer

The GenPro 354e provides an accelerometer with 3 axis of sensitivity ±2G or ±8G controllable by software.

Figure 30 : Positioning of the accelerometer axis

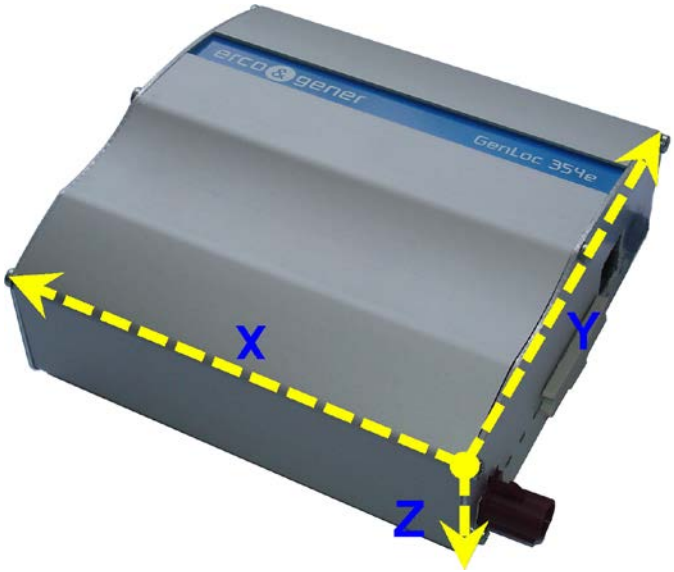

3.19 SIM card

Table 48: Characteristics of the SIM card power voltage

SIM card	3 V or 1.8 V

3.20 Dual SIM option S0471C

As an option it is possible to have a 2nd SIM reader.

- Option ***DUAL SIM*** reference ***S0471C***.

This SIM card is internal only.
The access can be done after removing the rear panel.
See Information Note EG_GenLocPro54e_1040_IN000_xxx_yy.

Table 49: Characteristics of the 2nd SIM card power voltage

SIM card	3 V or 1.8 V

3.21 Leds of the modem

Figure 31 : Back side Leds

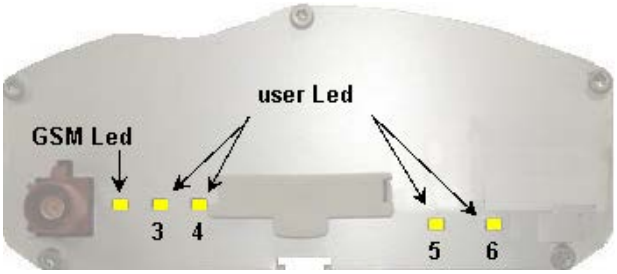

3.21.1 GSM Led

3.21.1.1 Without application

The GenPro 354e does not contain any application. The Led is OFF.

3.21.1.2 With standard library

The GenPro 354e contains the standard library. The Led is OFF.

3.21.1.3 The application ERCOGENER EasePro_Vx

The status of the GSM module is indicated by the status of the YELLOW GSM LED situated on the back side of the modem. This is the yellow LED situated on the left.

Table 50: Status of GSM LED

Status of GSM LED	LED activity	GSM status
OFF	LED OFF	The module is not activated or OFF.
ON	LED permanent	The module is attaching to GSM network.
LED flashing	0.5s ON / 1.5s OFF	The module is attached to the GSM network.
LED flashing	0.2s ON / 0.6s OFF	The module is in data, voice or GPRS communication.

3.21.1.4 Owner application

The GenPro 354e contains your application. The Led status depends on your parameters.

Descriptions and non-contractual illustrations in this document are given as an indication only.
ERCOGENER reserves the right to make any modifications.

3.21.2 User Led

These Leds are free. They are left at the disposal of the user.

If the GenPro 354e has the standard EGM library (see the documents "EG_EGM_CL_xxx_yy" of ERCOGENER), they can be controlled via AT command.

	n	AT+GPIOEXTSET=n,1	AT+GPIOEXTSET=n,0
Led 3	57	Led ON	Led OFF
Led 4	56		
Led 5	55		
Led 6	54		

Example AT+GPIOEXTSET=56,1 to turn ON the Led 4
AT+GPIOEXTSET=56,0 to turn OFF the Led4

Descriptions and non-contractual illustrations in this document are given as an indication only.
ERCOGENER reserves the right to make any modifications.

4 GSM

4.1 GSM external antenna

The GSM external antenna is connected to the modem via the FAKRA-D connector.

The external antenna must respond to the characteristics described in the table below.

Figure 32 : GSM external antenna

Table 51 : Characteristics of GSM external antenna

Frequency band		
900	880..960 MHz	
1800	1710..1880 MHz	
2100	1920..2170 MHz	
Impedance	50 Ohms nominal	
Input power	> 2 W peak	
Gain	< 4.25 dBi for 850 MHz < 7.55 dBi for 1700 MHz < 2.74 bBi for 1900 MHz	
VSWR	< 2:1 recommended	< 3:1 acceptable
Return Loss	S_{11}<-10 dB recommended	S_{11}<-6 dB acceptable

See § 5.9 Recommended accessories, for the GSM antennas recommended by ERCOGENER.

5 Use of the modem

In the following examples, the listed commands correspond to the EGM standard library.

(See the documents "EG_EGM_CL_xxx_yy" of ERCOGENER)

5.1 Specific recommendations for the use of the modem in vehicles

The power supply connector of the modem GenPro 354e must NEVER be connected directly to the battery of the vehicle.

5.1.1 Recommended connection on the battery of a truck

All trucks have a circuit breaker outside the cabin. The circuit breaker is used for security reasons:

The circuit breaker is connected to the ground of the truck, usually connected to the fuse box.

Most of truck circuit breakers do not cut the **+** '**PLUS**' of the battery, but cut its '**GROUND**'.

Figure 33 : Recommended connection on the battery of a truck

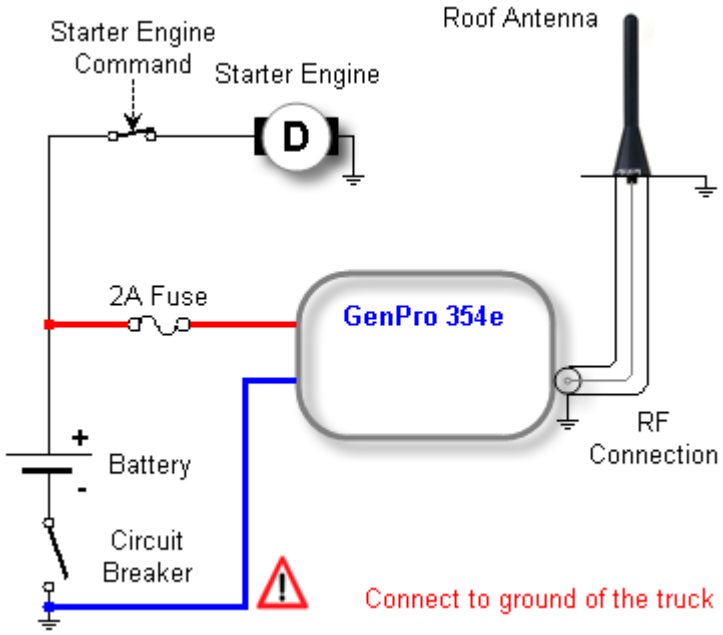

The scheme above shows a recommended power connection where the connection of the modem ground is not directly connected to the battery, but connected after the circuit breaker (on the ground of the truck or in the fuse box).

If this scheme is not respected, the modem can be damaged when starting the truck if the circuit breaker is open. It cannot support important starting currents.

5.2 Turning the modem OFF

It is strongly advised to un-register from the network with the command **AT+COPS=2**

When the battery is present, a mechanism allows to stop completely the application if the external power supply is unplugged, and also to prepare the modem for storage or transport, in order to limit high discharges of the battery.
If the device is not used, it has to be deactivated by sending the following command:

- **If the modem has an application developed with EGM**
  Disconnect the external power supply of the modem.
  And send the command ***AT+GPIOSET=35,0***
- **If the modem does not contain any embedded application**, via the Boot-Loader menu

```
Bootloader V4.09 GL54 UA Gener Ublox (HWF1 rev D/E)
GSM voltage = 4330 mV
 1 - Update application
 2 - Erase objects
 M - GSM direct access (external supply required)
 A - Advanced
 P - Power off
 E - Exit
```

  Disconnect the external power supply of the modem.
  And **Enter "P"**

Important note: The switching of the battery and its auto-maintain will be automatically reactivated once the modem will be plugged again to its external power supply.

5.3 Starting with the modem

5.3.1 Mounting the modem

To mount the modem on a support, use the fixing brackets as described below.

Figure 34 : Mounting the modem

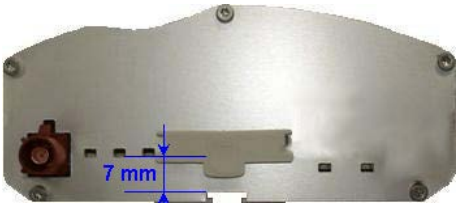

- Must be fixed on a flat surface
- Max. height of the screw head: 7 mm

The aluminium casing of the modem is connected to the 0V (GND) of the power supply and to the 0V of the RS232 serial link. To avoid any risk of conduction of the ground plane to other equipment, the modem must be electrically insulated from its mechanical support.

5.3.2 SIM card installation

To install the SIM card, it is recommended to do the following operations with the modem turned OFF:

- Remove the SIM card cover on the back side.
- Carefully insert the SIM card into the reader.

Figure 35 : Installation of the modem

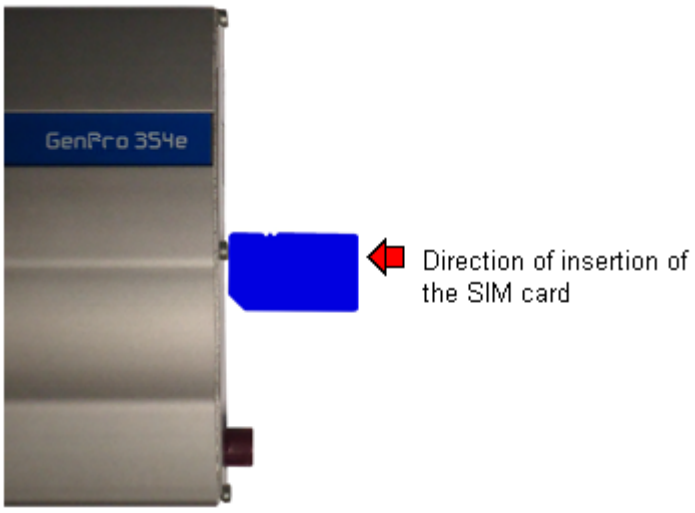

- Push the SIM card until hearing a "click" that ensures its correct positioning.
- Put the SIM cover back.

5.4 Use of the modem

- Install the SIM card.
- Connect the GSM antenna to the FAKRA-D connector (burgundy / purple).
- For the connection to the DTE, connect the V24 link via the 9-pin Sub D cable.
- Connect the power cable to the continuous and regulated external power source (for an automobile application, see § 5.1 Specific recommendations for the use of the modem in vehicles).
- Connect the power cable to the modem.
- Use a communication software like Windows HyperTerminal ® set as follows:
  - Bits per second .....: 115 200 bps,
  - Data Bits.....: 8,
  - Parity .....: Sans,
  - Stop Bits.....: 1,
  - Flow control .....: none.

5.4.1 Checking the communication with the modem

5.4.1.1 Without application

The GenPro 354e does not contain any application; it will return the menu of the BootLoader.

Menu by default when there is no application inside the equipment (example of display)

```
Bootloader V4.09 GL54 UA Gener Ublox (HWF1 rev D/E)
GSM voltage = 4325 mV
 1 - Update application
 2 - Erase objects
 M - GSM direct access (external supply required)
 A - Advanced
 P - Power off
 E - Exit
```

In the case where no communication can be established with the modem:

- Check the RS232 connection between the DTE and the modem (DCE),
- Check the configuration of the COM port of the DTE.

Descriptions and non-contractual illustrations in this document are given as an indication only.
ERCOGENER reserves the right to make any modifications.

5.4.1.2 Standard Library

The GenPro 354e contains the standard library.

Example of display when the standard library is present inside the equipment

```
************************************************************
00:00:00  flash_start_flash: new Flash handle - WAIT
00:00:00  EGM_INIT_SOFTWARE_RESET
00:00:00  Ext2: EGM_FCM_EVENT_FLOW_OPENNED
00:00:00  READY
00:00:00  Gprs_Call_State : GPRS_CALL_INIT
00:00:00  UTC Time field not valid
00:00:00  Date field not valid
00:00:01  Supply status: External supply connected
00:00:02  Analog input 3 State H
00:00:02  sim inserted
00:00:02  PIN code not required
00:00:02  GSM Ready
00:00:03  +CCLK: "12/07/30,09:29:45+00"
00:00:03  Got GSM clock info
00:00:03   *** IMEI: 358696048201787, product: "GenPro354e"
EasePro V300b2_EGM403b24 - GenPro354e - LEON-G100-06S-00 - Thu Jun 21 09:18:01
2012
00:00:03  PHB Ready
00:00:03  sim ready
00:00:07  SMS Ready
00:00:09  Network ready
00:00:09  network_gprs_state: 1
00:00:23  CREG OK : 1
```

Send the command AT+EGM3

The modem returns the version of the library

```
+EGM3: genapi V4.04, Date: Thu Nov 15 13:57:42     2012
```

In the case where no communication can be established with the modem:

- Check the RS232 connection between the DTE and the modem (DCE),
- Check the configuration of the COM port of the DTE

For more information about these AT commands and their associated parameters, see the documents "Commands List EG_EGM_CL_xxx_yy" of ERCOGENER.

5.4.1.3 The application ERCOGENER EasePro_Vx

The GenPro 354e contains the application EasePro_Vx.

Send the command ATI8. The modem returns the version (example of display)

```
EasePro V300b2_EGM403b24 – GenPro354e - LEON-G100-06S-00 - Thu Jun 21 09:18:01
2012
```

For more information about these AT commands and their associated parameters, see the documents "Commands List EG_EasePro_Vx_CL_yyy_UK" of ERCOGENER.

Descriptions and non-contractual illustrations in this document are given as an indication only.
ERCOGENER reserves the right to make any modifications.

5.4.1.4 The owner application

The GenPro 354e contains your application.

Set the RS232 port of the DTE according to your parameters (speed, data bits, parity and stop bit).

Check the display and the dialogue with the GenPro 354e according to your own characteristics.

5.5 Checking the quality of the GSM reception signal

The modem will be able to make a call only if the received GSM signal is powerful enough.

The command ***AT+CSQ*** allows to know the reception level (***rssi***) of the signal sent by the closest GSM Base Transceiver Station (BTS), as well as the reception error code (*g*).

When the SIM card is inserted and the PIN code entered, the command ***AT+CSQ*** allows to measure the signal from the BTS of the subscribed operator network.

This command cannot be used without the SIM card.

To check the quality of the GSM signal, do the following operations:

Use a communication software like Hyperterminal, enter the command *AT+CSQ*.

The response is in the following format:

+CSQ : <rssi>, <ber> with:

<***rssi***> = indicates the reception level,

<***ber***> = receive bit error rate.

Check the returned value <***rssi***> with the help of the table below.

Table 52 : RSSI value

Value of <*rssi*>	Gain in dbm	Interpretation	Value of <*ber*>	Interpretation
0	-113 dbm	Insufficient	0 to 7	See Standards ETSI GSM 05.08
1 to 10	-111 to -95 dbm	Insufficient		
11 to 30	-93 to -53 dbm	Sufficient		
31 (max)	-51dbm	Perfect		
99		Unknown/not detectable	99	Unknown/not detectable

The GSM modem works normally with a minimum <***rssi***> between 11 and 15.

Below 10, the signal level is insufficient; the modem cannot work depending on the geographical situation or the vehicle mobility. Above 15, the signal is sufficient.

For more information about the AT commands, see the document "EG_EGM_CL_xxx_yy" of ERCOGENER.

Descriptions and non-contractual illustrations in this document are given as an indication only.
ERCOGENER reserves the right to make any modifications.

5.6 Verification of the PIN code

The PIN code is necessary to make a call or to accept a response coming from the GSM network. This code is held in the SIM card and can be modified by the user.

To check that the PIN code has been entered, use a communication software like Hyperterminal, and enter the command ***AT+CPIN?***

The table below shows the main responses given by the modem:

Table 53 : Verification of PIN code

Command	Response	Interpretation
AT+CPIN?	**+CPIN : ERROR**	The SIM card is absent or not recognized
	+CPIN : READY	The PIN code is correct
	+CPIN : SIM PIN	The PIN code is wrong or not entered yet
	+CPIN : SIM PUK	The PUK code is required

For more information about the AT commands, see the document "EG_EGM_CL_xxx_yy" of ERCOGENER.

5.7 Verification of the modem registration on GSM network

1. Make sure that a valid SIM card is inserted in the SIM card reader of the modem.
2. Use a communication like Hyperterminal, and enter the following AT commands:
   a. ***AT+CPIN="xxxx"*** to enter the PIN code. The user has only 3 attempts to enter the PIN code. After the third attempt, only a second code (code PUK) supplied by the operator, will allow you to choose a new PIN code.
   b. ***AT+CREG?*** to check the registration status on the network. The response will be of the following format: +***CREG*** *:* <***mode***>, <***stat***> with:

   <***Mode***> = configuration of the registration message not solicited,

   <***Stat***> = registration status.
3. Check the registration status according to the value returned in the table below.

Table 54 : Verification of modem registration on GSM network

Command	Response	Interpretation
AT+CREG?	**+CREG : 0,0**	The modem is not recognized by the network.
	+CREG : 0,2 or 0,3	The modem is searching for a network operator.
	+CREG : 0,1	The modem is attached in GSM to the local operator.
	+CREG : 0,5	The modem is attached in GSM to the roaming operator.

If the modem is not registered: check the connection between the modem and the antenna or the reception level of the signal (cf. paragraph 5.5 Checking the quality of the GSM reception signal).

Descriptions and non-contractual illustrations in this document are given as an indication only.
ERCOGENER reserves the right to make any modifications.

5.8 Verification of the modem registration on GPRS network

1. Make sure that a valid SIM card is inserted in the SIM card reader of the modem.
2. With a communication software like Hyperterminal, enter the following AT commands:
   a. ***AT+CPIN="xxxx"*** to enter the PIN code. The user has only 3 attempts to enter the PIN code. After the third attempt, only a second code (code PUK) supplied by the operator, will allow you to choose a new PIN code.
   b. ***AT+CGREG?*** to check the registration status on the network. The response will be of the following format: +***CGREG*** *:* <***mode***>*,* <***stat***> with:

   <***Mode***> = configuration of the registration message not solicited,

   <***Stat***> = registration status.
3. Check the registration status according to the value returned in the table below.

Table 55 : Verification of the modem registration on GPRS network

Command	Response	Interpretation
AT+CREG?	**+CGREG : 0,0**	The modem is not recognized by the network.
	+CGREG : 0,2 or 0,3	The modem is searching for a network operator.
	+CGREG : 0,1	The modem is attached in GPRS to the local operator.
	+CGREG : 0,5	The modem is attached in GPRS to the roaming operator.

If the modem is not registered: check the connection between the modem and the antenna or the reception level of the signal (cf. paragraph 5.5 Checking the quality of the GSM reception signal).

For more information about the AT commands, see the document "EG_EGM_CL_xxx_yy" of ERCOGENER.

Descriptions and non-contractual illustrations in this document are given as an indication only.
ERCOGENER reserves the right to make any modifications.

5.9 Recommended accessories

The accessories recommended by ERCOGENER for the modem GenPro 354e are described on our website in the section Products/Accessories. For more information, please contact our sales department.

6 Client support

ERCOGENER ensures the client support for all its modems sold. You will then have access to:

- The latest version of this document
- The datasheet of the product
- The latest versions of the OS user guides
- Certificates
- Application notes

The support for the EGM developments is proposed as an option (contact us).

ANNEX 1 – 4-pins Micro-FIT cable (Power supply)

(ERCOGENER reference: 4402304215)

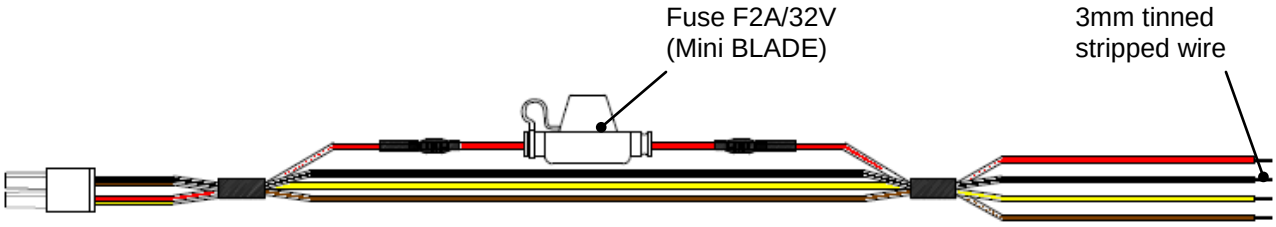

Figure 36 : 4-wires Micro-FIT cable

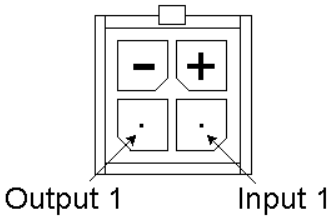

Table 56 : Characteristics of power supply cable

Component	Characteristics
4-pin connector	
Cable	Length ≈ 1.5m
Wire	Section : 0.75 mm²
Fuse	FK2A - 32V

Signal	Color
$+V_{DC}$	Red
GND	Black
INPUT 1 (E1)	Yellow
OUTPUT 1 (S1)	Brown

Fuse reference: Mini Blade for automobile 2A - 32V (color code: grey)

Figure 37 : Fuse Mini Blade

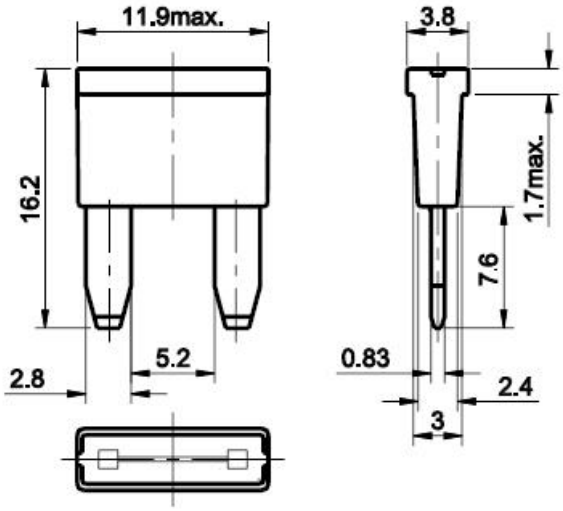

ANNEX 2 - 14-pins Micro-FIT cable (Inputs/Outputs)

(ERCOGENER reference: 4402314215)

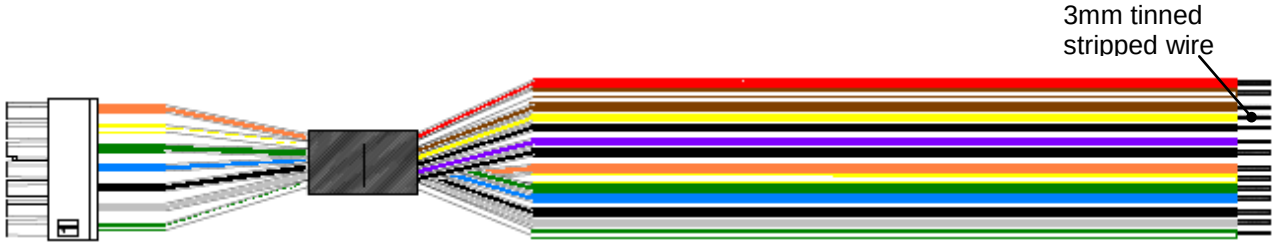

Figure 38 : 14-pins Micro-FIT cable (Inputs/Outputs)

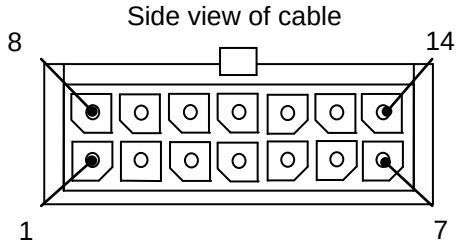

Table 57 : Characteristics of 14-wires inputs/outputs cable

Component	Characteristics
14-pin connector	
Cable	Length ≈ 1.5m
Wire	Section : 0.5 mm²

Table 58 : Wiring of the 14-wire inputs/outputs cable

Pin N°	Signal	Color
1	ONE_WIRE	White/Green
2	ANA2	Grey
3	E5-	Black
4	E5+	Blue
5	E4	Green
6	S3	White/Yellow
7	V_{BAT}	Orange
8	GND	Black
9	ANA1	Violet
10	E3-	Black
11	E3+	Yellow
12	E2	Brown
13	S2	White/Brown
14	BUZZER	Red

Descriptions and non-contractual illustrations in this document are given as an indication only.
ERCOGENER reserves the right to make any modifications.

ANNEX 3 – 16-pins Micro-FIT cable (14 wires, Serial links)

(ERCOGENER reference: 4404314215)

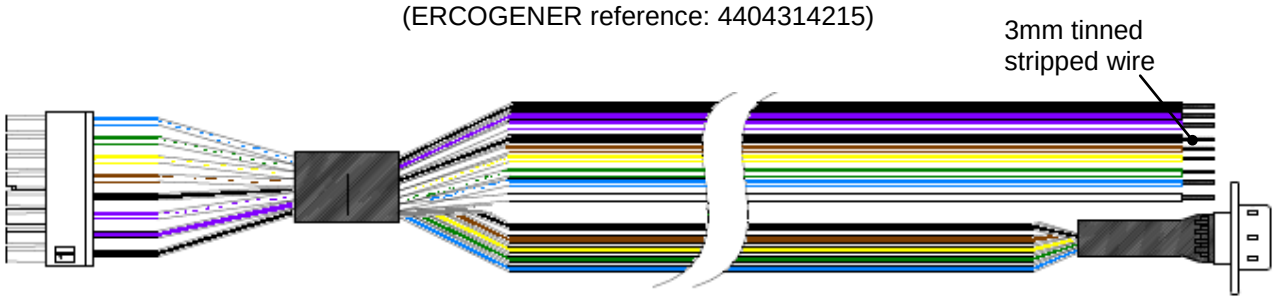

Figure 39 : 14-pins Micro-FIT cable (Serial links)

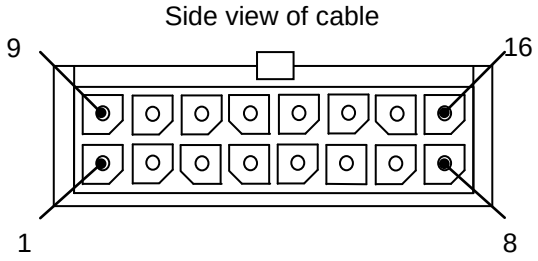

Table 59 : Characteristics of 14-wires serial links cable

Component	Characteristics
16-pin connector	
Cable	Length ≈ 1.5m
Wire	Section : 0.5 mm²
Sub D 9 pin female	

Table 60 : Wiring of 14-wire serial links cable

Pin N°	Signal	Color	Sub D 9 pin
1	GND	Black	---
2	TX_2 or CANH	Violet	---
3	RX_2 or CANL	White/Violet	---
4	GND	Black	---
5	CTS_1	White/Brown	---
6	RTS_1	White/Yellow	---
7	TX_1	White/Green	---
8	RX_1	White/Blue	---
9	POWER_OUT	White	---
10	RESET	---	---
11	BOOT	---	---
12	GND	Black	5
13	CTS_0	Brown	8
14	RTS_0	Yellow	7
15	TX_0	Green	3
16	RX_0	Blue	2
	---	---	9
	---	---	6
	---	---	4
	---	---	1

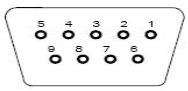

Descriptions and non-contractual illustrations in this document are given as an indication only.
ERCOGENER reserves the right to make any modifications.

ANNEX 4 – 16-pins Micro-FIT cable (16 wires, Serial links, Boot and Reset)

(ERCOGENER reference: 4402316215)

As an option, a 16-wire cable can be provided. It is the same as the previous one but provides also the "Boot" and "Reset" inputs. These cables have a 30 cm length.

This cable is already included with the EGM development kits.

Figure 40 : 16-wire Micro-FIT cable (Serial links, Boot and Reset)

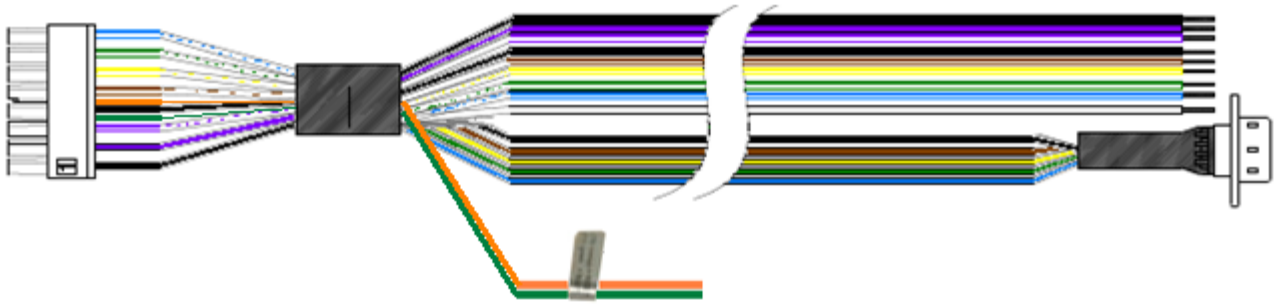

Table 61 : Characteristics of the 16-pins serial links cable (Boot + Reset)

Component	Characteristics
16-pin connector	
Cable	Length ≈ 0.3m
Wire	Section : 0.5 mm²

Table 62 : Wiring of the 16-wires serial links cable (Boot + Reset)

Pin N°	Signal	Color	Sub D 9 pin
10	RESET	Orange	---
11	BOOT	Green	---

Descriptions and non-contractual illustrations in this document are given as an indication only.
ERCOGENER reserves the right to make any modifications.

ANNEX 5 - Abbreviations

3GPP	3rd Generation Partnership Project
AC	Alternative Current
ACM	Accumulated Call Meter
ADC	Analog to Digital Converter
ADN	Abbreviated Dialing Numbers
AIeC	Automatically Initiated eCall
AMR	Adaptive Multi Rate
APN	Access Point Name
ASCII	American Standard Code for Information Interchange
AT	AT Command Interpreter Software Subsystem, or attention
BER	Bit Error Rate
BL	Black List
BSD	Berkley Standard Distribution
BTS	Base Transceiver Station
CB	Cell Broadcast
CBM	Cell Broadcast Message
CLI	Calling Line Identification
CLIP	Calling Line Identification Presentation
CLIR	Calling Line Identification Restriction
CLK	ClocK
CM	Connection Management
CMOS	Complementary Metal Oxide Semiconductor
COLP	Connected Line Identification Presentation
COLR	Connected Line Identification Restriction
CPHS	Common PCN Handset Specification
CR	Carriage Return
CS	Coding Scheme
CSD	Circuit-Switched Data
CTS	Clear To Send
CUG	Closed User Group
DA	Destination Address
DARP	Downlink Advanced Receiver Performance
dB	Decibel
dBc	Decibel relative to the Carrier power
dBi	Decibel relative to an Isotropic radiator
dBm	Decibel relative to one milliwatt
DC	Direct Current
DCD	Data Carrier Detect
DCE	Data Communication Equipment
DCM	Data Connection Management
DCS	Digital Cellular System
DDC	Display Data Channel (I2C compatible) Interface
DL	Down-link (Reception)
DNS	Domain Name Server
DRX	Discontinuous Reception
DSR	Data Set Ready
DTE	Data Terminal Equipment
DTMF	Dual Tone Multi-Frequency
DTR	Data Terminal Ready
DUT	Device Under Test
EDGE	Enhanced Data rates for Global Evolution
EEPROM	Electrically Erasable Programmable Read-Only Memory
EFR	Enhanced Full Rate
EGM	Erco Gener Middleware

Descriptions and non-contractual illustrations in this document are given as an indication only.
ERCOGENER reserves the right to make any modifications.

E-GSM	Extended GSM
EMC	ElectroMagnetic Compatibility
EMI	ElectroMagnetic Interference
ESD	ElectroStatic Discharges
ETSI	European Telecommunications Standards Institute
E-UTRAN	Evolved UTRAN
FDN	Fixed Dialling Number
FIT	Series of connectors (micro-FIT)
FOAT	Firmware Over AT
FOTA	Firmware Over The Air
FR	Full Rate
FS	File System
FTA	Full Type Approval
FTP	File Transfert Protocol
FW	Firmware
GCF	Global Certification Forum
GDI	Generic Digital Interfaces
GND	GrouND
GNSS	Global Navigation Satellite System
GPIO	General Purpose Input Output
GPRS	General Packet Radio Service
GPS	Global Positioning System
GSM	Global System for Mobile Communications
H	High
HDLC	High Level Data Link Control
HPLMN	Home PLMN
HSDPA	High Speed Downlink Packet Access
HSPA	High Speed Packet Access
HSUPA	High Speed Uplink Packet Access
HTTP	HyperText Transfer Protocol
I	Input
I/O	Input / Output
I2C	Inter-Integrated Circuit Interface
ICCID	Integrated Circuit Card ID
ICMP	Internet Control Message Protocol
ICP	Inter Processor Communication
IEC	International Electrotechnical Commission
IMEI	International Mobile Equipment Identity
IMSI	International Mobile Station Identity
IP	Internet Protocol
IRA	International Reference Alphabet
IRC	Intermediate Result Code
ISDN	Integrated Services Digital Network
ISP	Internet Service Provider
IVS	In-Vehicle System (eCall related)
L	Low
L3	Layer 3
LCC	Leadless Chip Carrier
LCP	Link Control Protocol
LED	Light Emitting Diode
LF	Line Feed
LLC	Low Level Command
M2M	Machine-To-Machine
MAX	MAXimum
MCC	Mobile Country Code
ME	Mobile Equipment
MIC	MICrophone

Descriptions and non-contractual illustrations in this document are given as an indication only.
ERCOGENER reserves the right to make any modifications.

Micro FIT	Family of connectors from Molex
MIeC	Manually Initiated eCall
MIN	MINimum
MMI	Man Machine Interface
MN	Mobile Network Software Subsystem
MNC	Mobile Network Code
MNP	Microcom Networking Protocol
MO	Mobile Originated
MS	Mobile Station
MSD	Minimum Set of Data (eCall related)
MSIN	Mobile Subscriber Identification Number
MSISDN	Mobile Systems International Subscriber Identity Number
MSPR	Multi-Slot Power Reduction
MT	Mobile Terminated
MWI	Message Waiting Indication
N/A	Not Applicable
NITZ	Network Identity and Time Zone
NOM	NOMinal
NVM	Non-Volatile Memory
O	Output
OD	Open Drain
OLCM	On Line Commands Mode
Pa	Pascal (for speaker sound pressure measurements)
PAD	Packet Assembler/Disassembler
PBCCH	Packet Broadcast Control Channel
PC	Personal Computer
P-CID	Physical Cell Id
PCL	Power Control Level
PCN	Personal Communication Network
PCN / IN	Product Change Notification / Information Note
PD	Pull-Down
PDP	Packet Data Protocol
PDU	Protocol Data Unit
PIN	Personal Identity Number
PLMN	Public Land Mobile Network
POS	Power-On Input (power domain)
PPP	Point-to-Point Protocol
PSAP	Public Safety Answering Point (eCall related)
PSD	Packet-Switched Data
PU	Pull-Up
PUK	Personal Unblocking Key
QoS	Quality of Service
RAM	Random Access Memory
RDI	Restricted Digital Information
RF	Radio Frequency
RFI	Radio Frequency Interference
RFU	Reserved for Future Use
RI	Ring Indicator
RMC	Reference Measurement Channel
RMS	Root Mean Square
RTC	Real Time Clock
RTP	Real-time Transport Protocol
RTS	Request To Send
Rx	Receiver
SAP	SIM Access Profile
SC	Service Centre
SI	SIM Application Part Software Subsystem

Descriptions and non-contractual illustrations in this document are given as an indication only.
ERCOGENER reserves the right to make any modifications.

SIM	Subscriber Identity Module
SIP	Session Initiation Protocol
SMA	SubMiniature version A RF connector
SMB	SubMiniature version B RF connector
SMS	Short Message Service
SMSC	Short Message Service Center
SMTP	Simple Mail Transfer Protocol
SNR	Signal-to-Noise Ratio
SNTP	Simple Network Time Protocol
SoR	Steering of Roaming
SPI	Serial Peripheral Interface
SPK	SpeaKer
SPL	Sound Pressure Level
SRAM	Static RAM
TA	Terminal Adaptor
TCP	Transfer Control Protocol
TCP/IP	Transmission Control Protocol / Internet Protocol
TDMA	Time Division Multiple Access
TE	Terminal Equipment
TFT	Traffic Flow Template
TP	Transfer layer Protocol
TU	Typical Urban fading profile
Tx	Transmitter
TYP	TYPical
TZ	Time Zone
UART	Universal Asynchronous Receiver-Transmitter serial interface
UCS2	Universal Character Set
UDI	Unrestricted Digital Information
UDP	User Datagram Protocol
UI	Unnumbered Information
UICC	Universal Integrated Circuit Card
UIH	Unnumbered Information with header Check
UL	Up-link (Transmission)
UMTS	Universal Mobile Telecommunications System
URC	Unsolicited Result Code
USB	Universal Serial Bus (power domain)
USIM	UMTS Subscriber Identity Module
UTC	Universal Time Clock
UTRAN	Universal Terrestrial Radio Access Network
UUS1	User-to-User Signalling Supplementary Service 1
VSWR	Voltage Stationary Wave Ratio
WCDMA	Wideband Code Division Multiple Access

Descriptions and non-contractual illustrations in this document are given as an indication only.
ERCOGENER reserves the right to make any modifications.

erco&gener

L'esprit Modem

DECLARATION OF CONFORMITY

Manufacturer : **ERCOGENER**

Address : Z.I de Saint Lambert des Levées
B.P. 30163
49412 SAUMUR CEDEX – France

Website : http://www.ercogener.com

declares that the product :

Name : GenPro 354e Family : 1040R
Type : Modem

Complies with :

- R&TTE 1999/5/EC Directive,
- EN301489-1:V1.8.1
- EN301489-7:V1.3.1
- Compliant with the requirements of the ECE R10 rev4
- EN 301 511 v9.0.2
- EN 60950-1:2006 + A11:2009
- EN50385 :2002
- ROHS Compliant : Directive 2011/65/EU.
- REACH N°1907/2006 SVHC163

CE

The corresponding markings appear under the appliance.

Saumur, October, 20th 2015

Eric GUÉNEUGUÈS
Quality Manager