Tengxiang Technology.Inc

东莞市腾祥电子有限公司

Product Number:AN5000-SNA853240-B-BZ
Product Name: Antenna

Specification For Approval

Date: 2024.9.27

Version: 1.0

客 户 名 称
Customer: 深圳市先智物联科技有限公司

客 户 料 号
Customer P/N: **ANT000098**

腾 祥 料 号
T X P/N: **AN5000-SNA853240-B-BZ**

规 格 描 述
Description : **5G 金属片天线**

Tengxiang Checked By: 腾 祥 审 核		Customer Approved By: 客 户 审 核	
DRAWN 制 作	路婷	TESTED BY 检 测	
CHECKED BY 审 核	胡超	CHECKED BY 审 核	
Q.C.DEPT. 品 管	江美如	Q.C.DEPT. 品 管	
APPROVED BY 核 准	韦佳	APPROVEDBY 核 准	

东莞市腾祥电子有限公司 工程部

NO.53 Shatou ShaChong Road, ChangAn Town, Guangdong province, China
中国广东省东莞市长安镇沙头区沙涌路 53 号
TEL:86-769-81873082 FAX:86-769-82663788
http://www.tenxiang.cn

Product Number:AN5000-SNA853240-B-BZ
Product Name: Antenna

Index:

1. Specification (规格)

2. Characteristics and Reliability Test (产品特性和可靠性测试标准)

3. Antenna - S Parameter Test Data (样品测试数据)

4. Antenna - Radiation Pattern Test Data (辐射模式测试数据)

5. Mechanical and Packing Drawing (图纸包装规范)

Revision History（变更履历）

Revision	Date	Change Notification	Description
1.0	2024.9.27	初版	

複製禁止

Tengxiang Technology.Inc

东莞市腾祥电子有限公司

Product Number:AN5000-SNA853240-B-BZ
Product Name: Antenna

1. Specification

Sample Photo	
A. Electrical Characteristics	
Frequency 频率	**5150-5850MHz**
S.W.R. 驻波比	**<= 2.0**
Antenna Gain 增益	**3.17dBi**
Polarization 极化方式	**Linear**
Impedance 阻抗	**50 Ohm**
B. Material & Mechanical Characteristics	
Material 材质	不锈钢镀镍
C. Environmental	
Storage Temperature 存储温度	**- 40˚C ~ +80 ˚C**
Operation Temperature 工作温度	**- 40˚C ~ +80 ˚C**
Antenna Color Storage life 天线颜色存储寿命	**< 2** year

複製禁止

Product Number:AN5000-SNA853240-B-BZ
Product Name: Antenna

2. Characteristics and Reliability Test

Test Items 测试项目		Test Condition and Procedure 测试方法	Requirements 要求	Result 结果
1	V.S.W.R. 电压驻波比	Set DUT on Network Analyzer; make individual calibration to test 设置网络分析仪参数进行测试	Directive DUT specification 符合待测物规范	PASS
2	Antenna Gain 天线增益	Set DUT on Antenna Chamber; make individual calibration to test 设置天线暗室参数进行测试	Directive DUT specification 符合待测物规范	PASS
3	Dimension 尺寸	Inspection of dimension, color, material, package, surface process.检查尺寸,颜色,材料,包装,表面处理	Directive DUT specification 符合待测物规范	PASS
4	RoHS	With Reference to IEC 62321:2008 with flow chart 参考 IEC 62321 测试流程	Directive RoHS 2015/863/EU 符合 RoHS 2015/863/EU 标准	PASS

複製禁止

Product Number:AN5000-SNA853240-B-BZ
Product Name: Antenna

3. Antenna - S Parameter Test Data

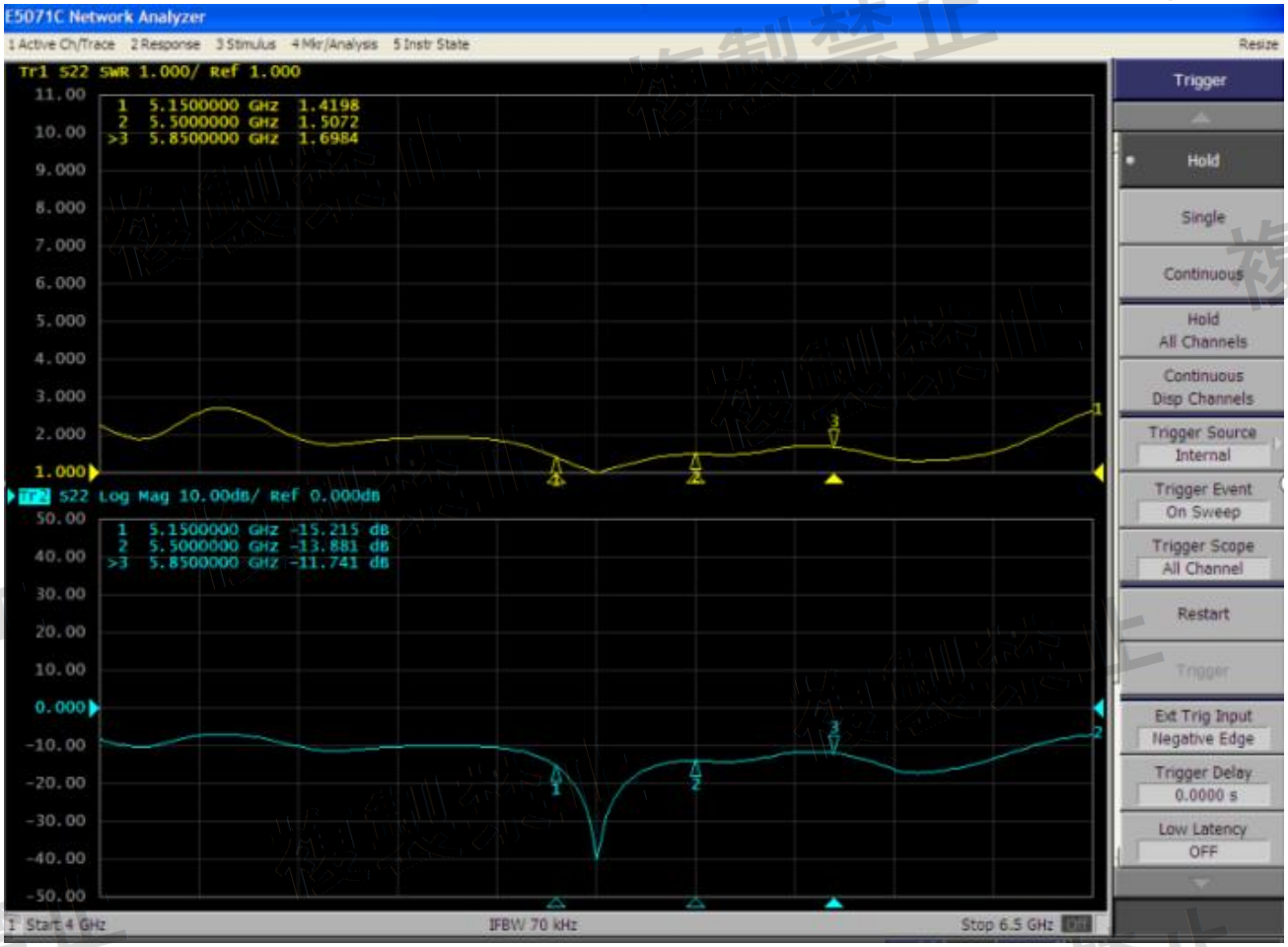

4. Antenna - Radiation Pattern Test Data

12	13	14	15	16	17	18	19	20	21	22	23	24	25	26
5150.0	5200.0	5250.0	5300.0	5350.0	5400.0	5450.0	5500.0	5550.0	5600.0	5650.0	5700.0	5750.0	5800.0	5850.0
2.37	2.17	2.59	2.44	2.48	2.21	2.51	2.07	2.80	3.17	3.06	2.82	3.09	2.81	2.55
55.72	56.92	60.90	52.78	59.45	59.57	59.84	56.13	60.09	62.04	61.68	54.74	58.53	57.65	55.11

複製禁止

Product Number:AN5000-SNA853240-B-BZ
Product Name: Antenna

XZ **YZ** **XY**

5150MHz

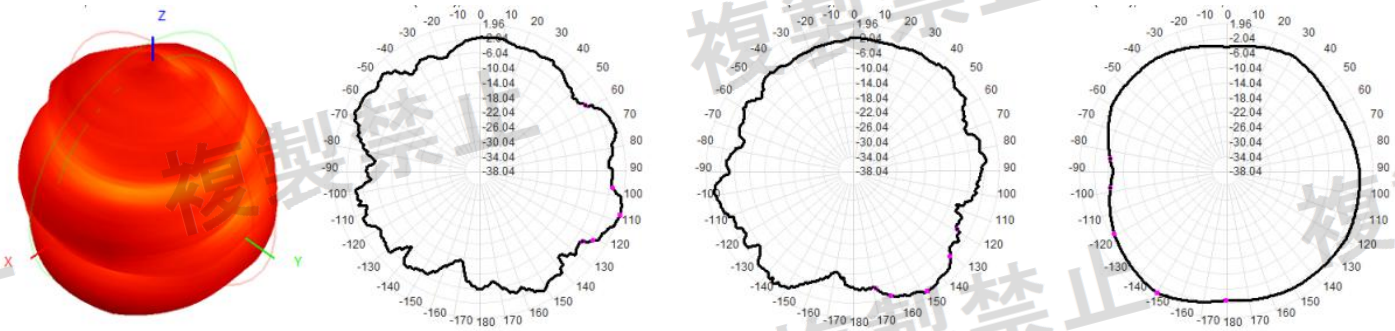

5550MHz

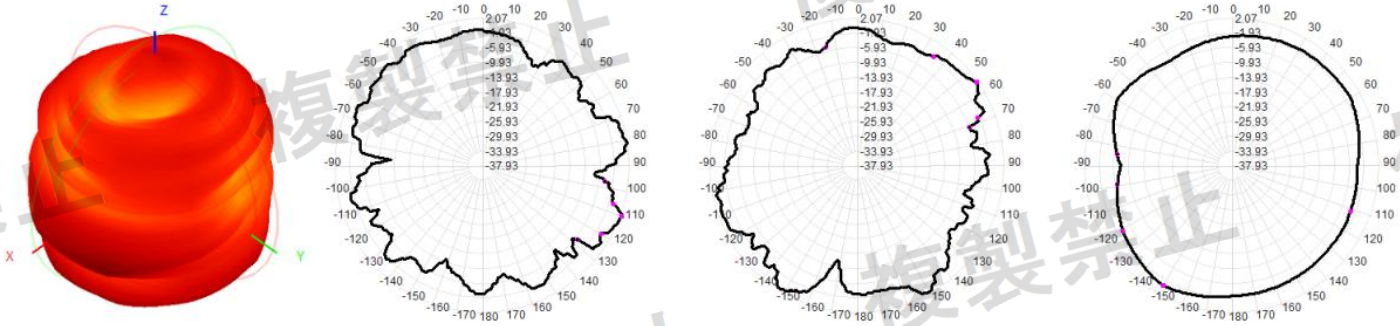

5850MHz

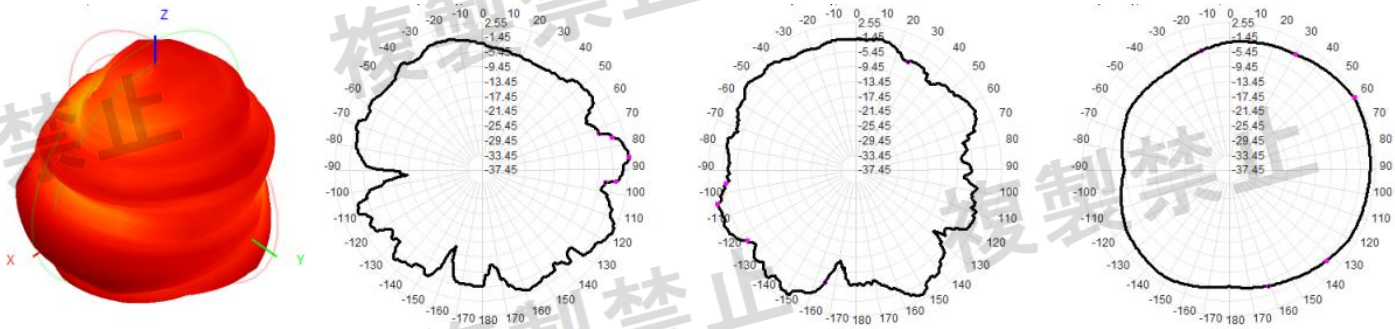

5. Mechanical Drawing See attached files

複製禁止

HF	☐
RoHS	■
REACH	☐
CONFIDENTIAL	

SIGN	DATE	DESCRIPTION	APPROVER
B			
C			
D			

包装要求：空白纸箱+载带

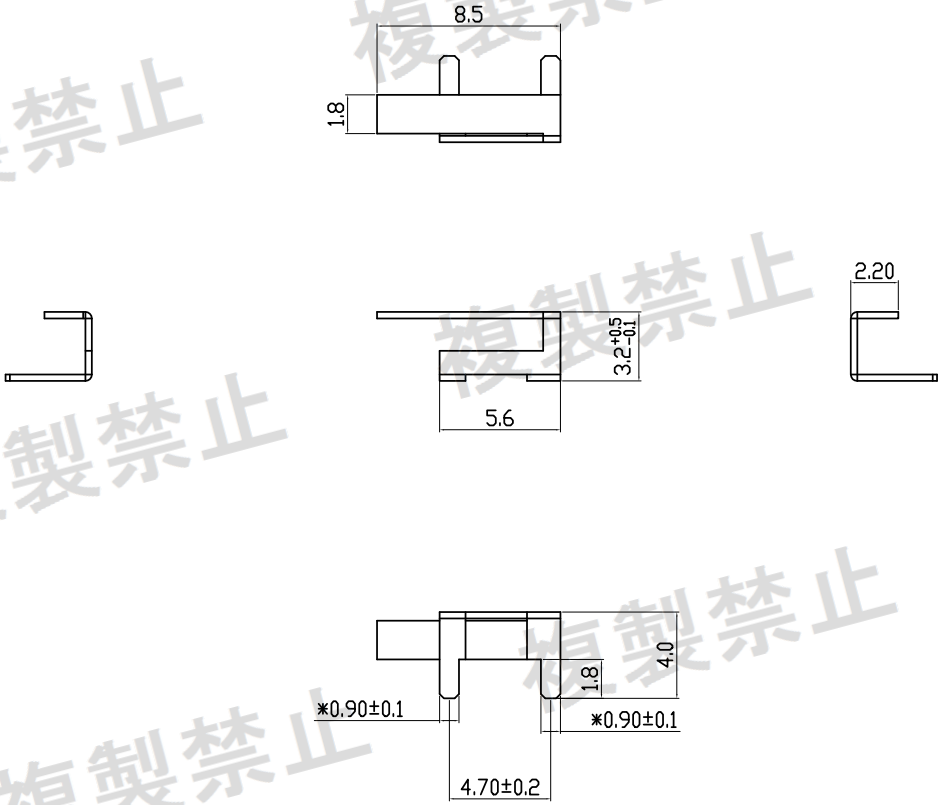

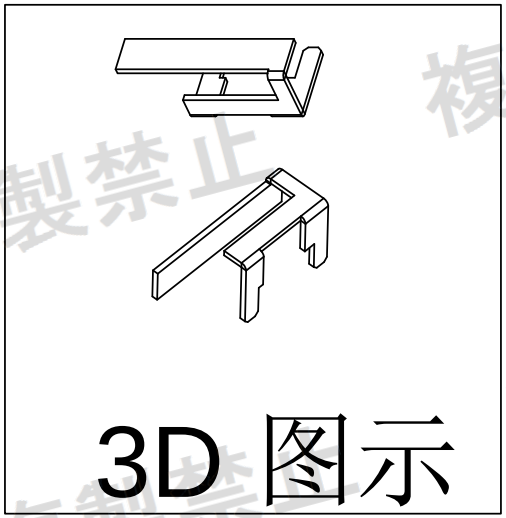

备注:

1.材质: 不锈钢镀镍 T=0.30mm

2.尺寸: 带＊为重点尺寸;带Cpk尺寸需做制程能力管控(≧1.33)

3.公差: 未标注公差请参照标准公差.

Tengxiang Electronics Co., Ltd.

TITLE: 5G 金属片

PART NO.: AN5000-SNA853240-B-BZ | CUSTOMER P/N: /

APP BY	CHK BY	RF BY	DES BY		Tolerance
YCX 2024.09.27	HC 2024.09.27	WJ 2024.09.27	DWF 2024.09.27	UNITS: mm SCALE: 1/1 REVISION: A	X.X ±0.5 X.XX ±0.2 X° ±1

複製禁止