RAIN

5020 Chip antenna

For Bluetooth / WLAN Applications

P/N: RANT5020F245M01

	Dimension (mm)
L	5.02 ± 0.20
W	2.02 ± 0.20
T	0.60 ± 0.20

2.4GHz 5020 Chip Antenna: RANT5020F245M01
Part Number Information

RAIN

RANT	5020	F	245	M	01
A	B	C	D	E	F

A	Product Series	Antenna
B	Dimension L x W	5.0X2.0mm (+-0.2mm)
C	Material	High K material
D	Working Frequency	2.4 ~ 2.5GHz
E	Feeding mode	Monopole & Single Feeding
F	Antenna type	Type=01

1. Electrical Specification

Specification		
Part Number	RANT5020F245M01	
Central Frequency	2450	MHz
Bandwidth	100 (Min.)	MHz
Return Loss	-10 (Max)	dB
Peak Gain	3.11	dBi
Impedance	50	Ohm
Operating Temperature	-40 ~ +85	℃
Maximum Power	4	W
Resistance to Soldering Heats	10 (@ 260℃)	sec.
Polarization	Linear	
Azimuth Beamwidth	Omni-directional	
Termination	Cu / Sn (Leadless)	

Remark : Bandwidth & Peak Gain was measured under evaluation board of next page

2. Recommended PCB Pattern

Evaluation Board Dimension

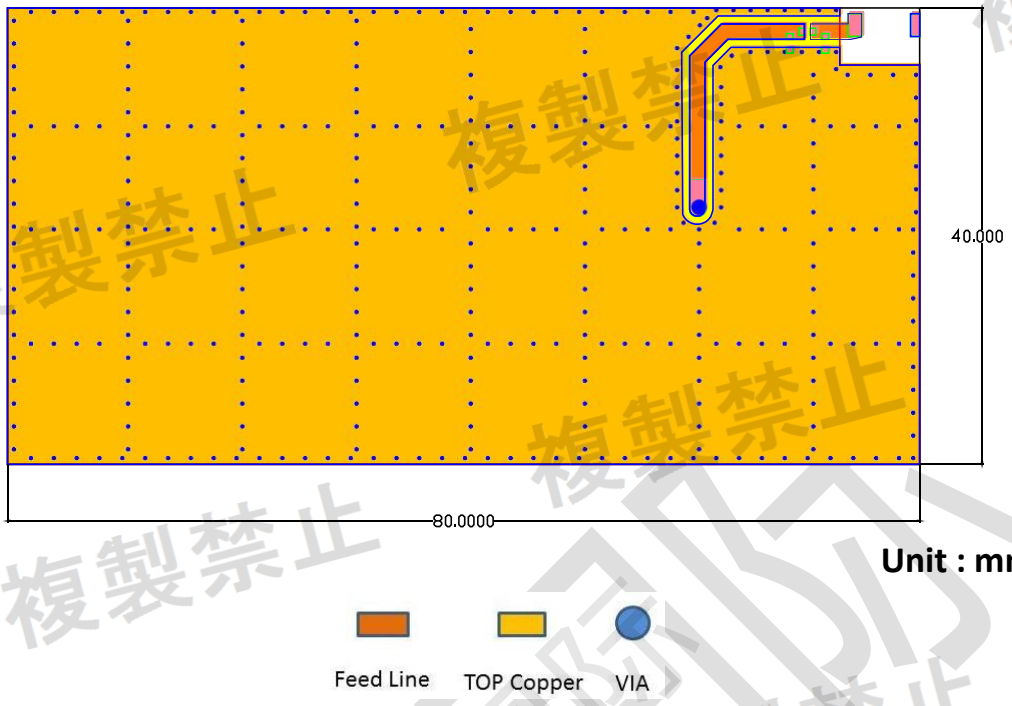

Unit : mm

Suggested Matching Circuit

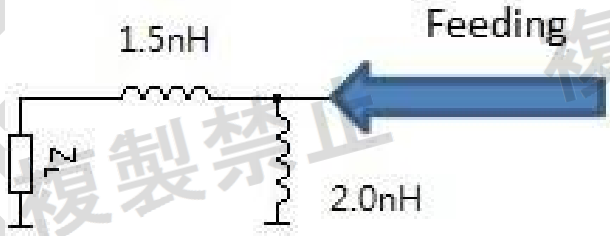

2.4GHz 5020 Chip Antenna: RANT5020F245M01

Layout Dimensions in Clearance area (Size=7.0*5.0mm)

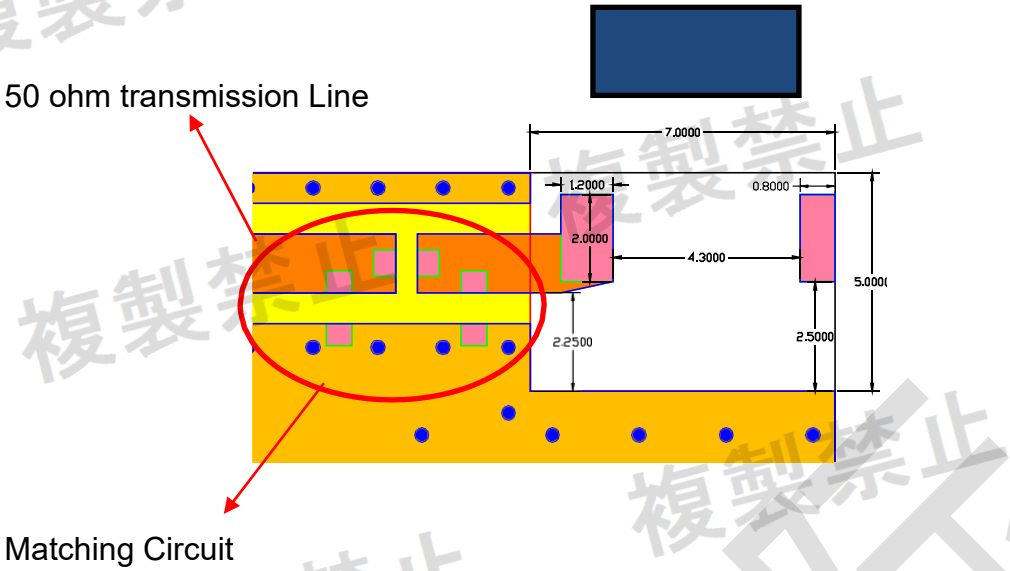

FootPrint (Unit : mm)

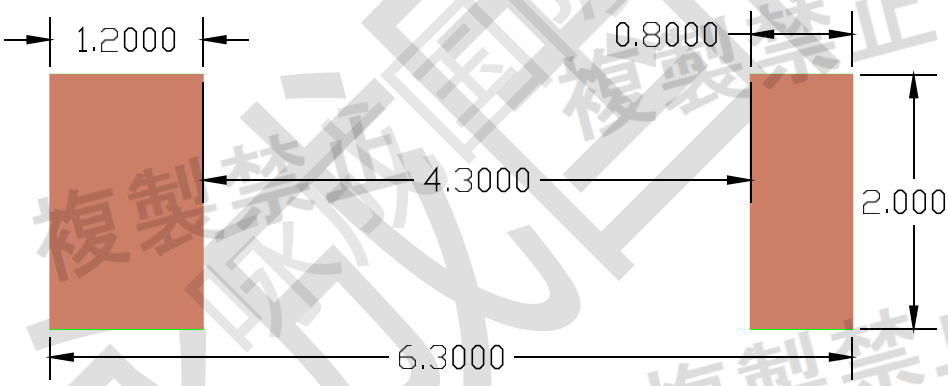

3. Measurement Results

Return Loss

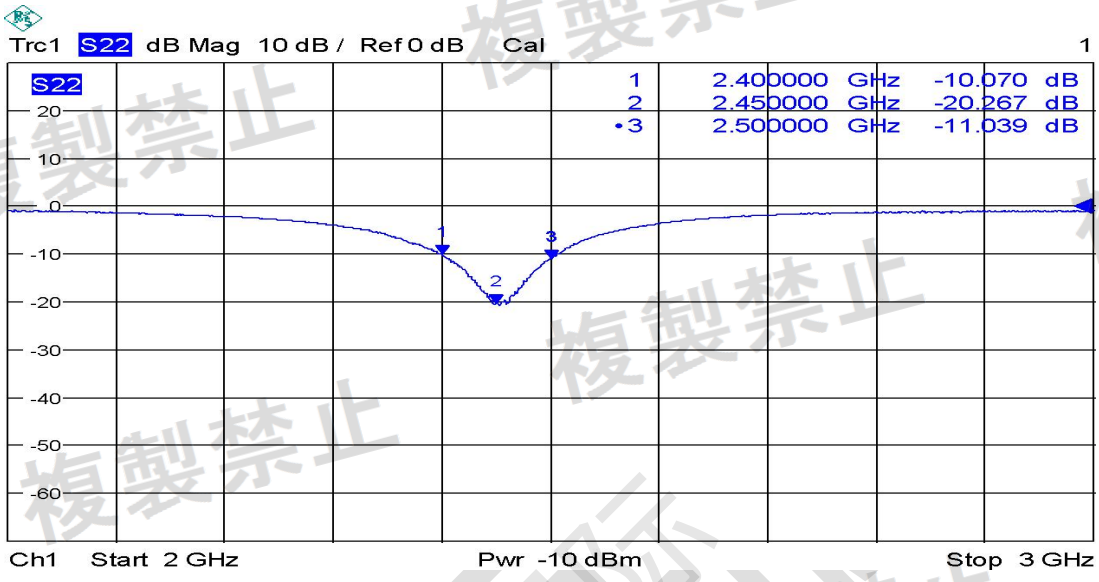

2.4GHz 5020 Chip Antenna: RANT5020F245M01

Radiation Pattern

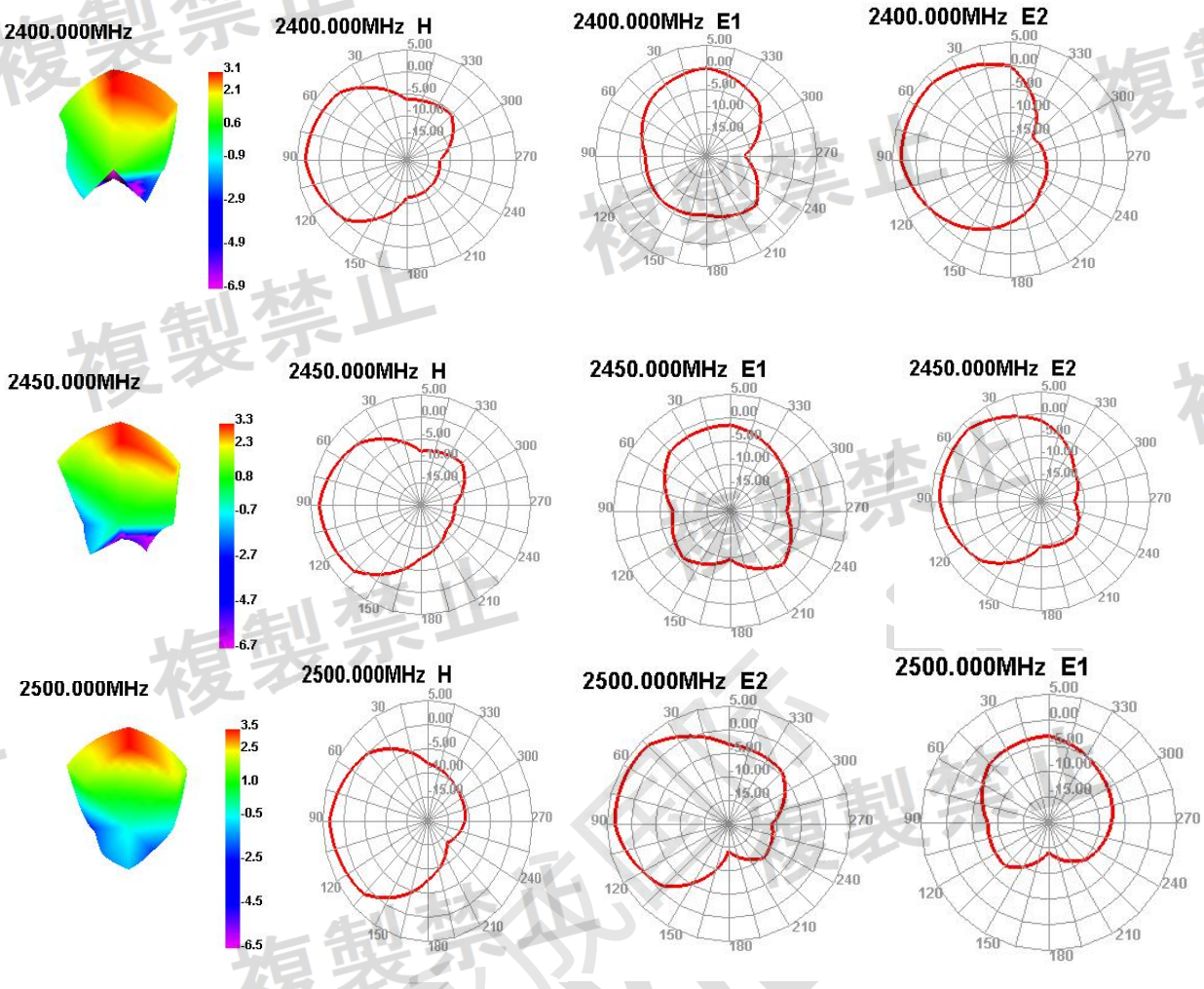

	Efficiency	Peak Gain
2400MHz	77.56%	3.11dBi

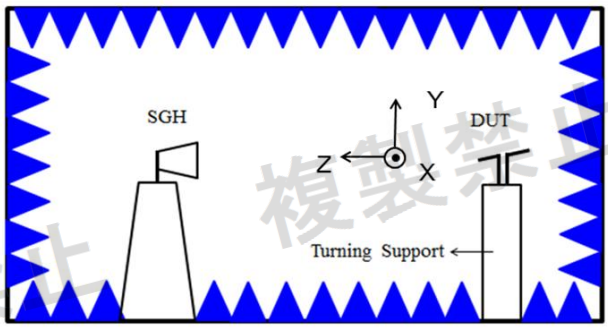

4. Reliability and Test Condictions

ITEM	REQUIREMENTS	TEST CONDITION
Solderability	1. Wetting shall exceed 90% coverage 2. No visible mechanical damage 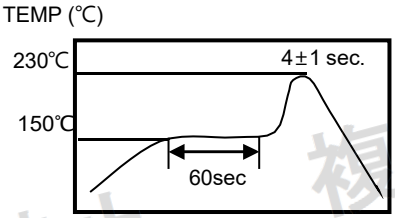	Pre-heating temperature:150℃/60sec. Solder temperature:230±5℃ Duration:4±1sec. Solder:Sn-Ag3.0-Cu0.5 Flux for lead free: rosin
Solder heat Resistance	1. No visible mechanical damage 2. Central Freq. change :within ± 6% 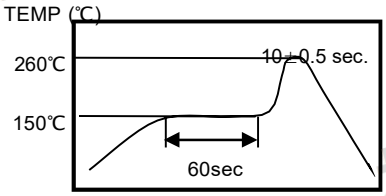	Pre-heating temperature:150℃/60sec. Solder temperature:260±5℃ Duration:10±0.5sec. Solder:Sn-Ag3.0-Cu0.5 Flux for lead free: rosin
Component Adhesion (Push test)	1. No visible mechanical damage	The device should be reflow soldered(230±5℃ for 10sec.) to a tinned copper substrate A dynometer force gauge should be applied the side of the component. The device must with-ST-F 0.5 Kg without failure of the termination attached to component.
Component Adhesion (Pull test)	1. No visible mechanical damage	Insert 10cm wire into the remaining open eye bend ,the ends of even wire lengths upward and wind together. Terminal shall not be remarkably damaged.
Thermal shock	1. No visible mechanical damage 2. Central Freq. change :within ±6% Phase / Temperature(℃) / Time(min) 1 / +85±5℃ / 30±3 2 / Room Temperature / Within 3sec 3 / -40±2℃ / 30±3 4 / Room Temperature / Within 3sec	+85℃=>30±3min -40℃=>30±3min Test cycle:10 cycles The chip shall be stabilized at normal condition for 2~3 hours before measuring.
Resistance to High Temperature	1. No visible mechanical damage 2. Central Freq. change :within ±6% 3. No disconnection or short circuit.	Temperature: 85±5℃ Duration: 1000±12hrs The chip shall be stabilized at normal condition for 2~3 hours before measuring.
Resistance to Low Temperature	1. No visible mechanical damage 2. Central Freq. change :within ±6% 3. No disconnection or short circuit.	Temperature:-40±5℃ Duration: 1000±12hrs The chip shall be stabilized at normal condition for 2~3 hours before measuring.
Humidity	1. No visible mechanical damage 2. Central Freq. change :within ±6% 3. No disconnection or short circuit.	Temperature: 40±2℃ Humidity: 90% to 95% RH Duration: 1000±12hrs The chip shall be stabilized at normal condition for 2~3 hours before measuring.

5.Soldering and Mounting

Mildly activated rosin fluxes are preferred. The minimum amount of solder can lead to damage from the stresses caused by the difference in coefficients of expansion between solder, chip and substrate. The terminations are suitable for all wave and re-flow soldering systems. If hand soldering cannot be avoided, the preferred technique is the utilization of hot air soldering tools.

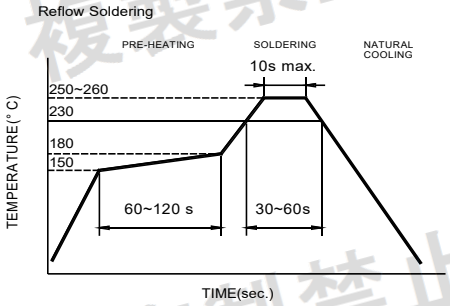

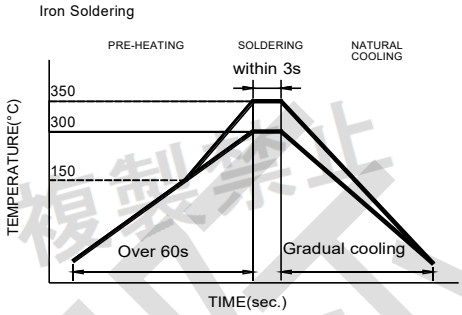

Recommended temperature profiles for re-flow soldering in Figure 1.

Products attachment with a soldering iron is discouraged due to the inherent process control limitations. In the event that a soldering iron must be employed the following precautions are recommended.

- Preheat circuit and products to 150℃
- Never contact the ceramic with the iron tip
- Use a 20 watt soldering iron with tip diameter of 1.0mm
- 280℃ tip temperature (max)
- 1.0mm tip diameter (max)
- Limit soldering time to 3 sec.

6.Packaging Information

◆ **Tape Specification:**

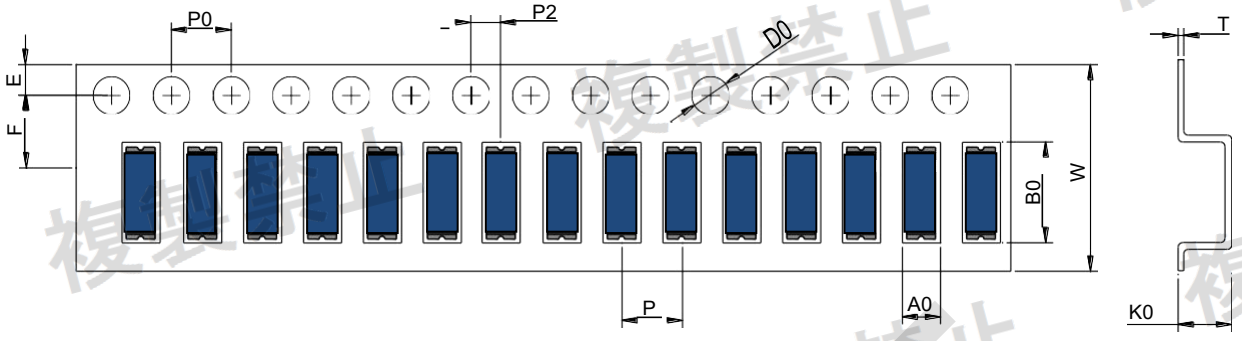

W	Ao	Bo	Ko	P	F	E	D	D1	Po	P2	t
16.0 ±0.30	1.30 ±0.10	5.30 ±0.10	1.50 ±0.10	4.00 ±0.10	7.50 ±0.10	1.75 ±0.10	1.50 ±0.10	0.00 ±0.10	4.00 ±0.10	2.00 ±0.10	0.30 ±0.05

◆ **Reel Specification: (7'', Φ180 mm)**

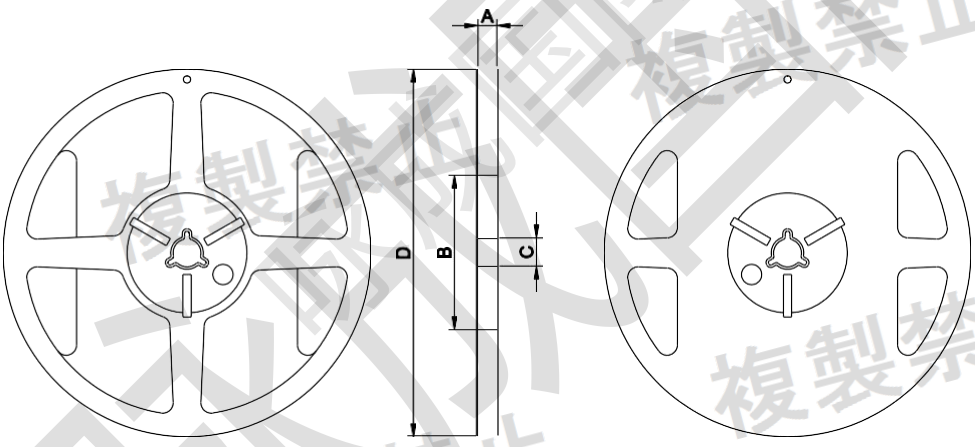

7" x 12 mm

Tape Width(mm)	A(mm)	B(mm)	C(mm)	D(mm)	Chip/Reel(pcs)
12	12±1.0	60±2	13.5±0.5	178±2	5000

7. Storage and Transportation Information

Storage Conditions

To maintain the solderability of terminal electrodes:

1. Temperature and humidity conditions: -10~ 40℃ and 30~70% RH.
2. Recommended products should be used within 6 months from the time of delivery.
3. The packaging material should be kept where no chlorine or sulfur exists in the air.

Transportation Conditions

1. Products should be handled with care to avoid damage or contamination from perspiration and skin oils.
2. The use of tweezers or vacuum pick up is strongly recommended for individual components.
3. Bulk handling should ensure that abrasion and mechanical shock are minimized.

複製禁止