EUROFINS ELECTRICAL TESTING SERVICE (SHENZHEN) CO., LTD.

RADIO TEST - REPORT

Japan Compliance Test Report

Test Report Number: EFGX25060060-IE-03-E01

複製禁止

Content

1	**General Information**	**3**
1.1	Notes	3
1.2	Testing laboratory	4
1.3	Details of approval holder	4
1.4	Details of Manufacturer	4
1.5	Application details	5
1.6	Test item	5
1.7	Standards	6
2	**Technical test**	**7**
2.1	Summary of test results	7
2.2	Test environment	7
2.3	Measurement uncertainty	7
2.4	Test mode	7
2.5	Test equipment utilized	8
2.6	Auxiliary Equipment Used during Test:	9
2.7	Test software information:	9
2.8	Customized Configurations	9
2.9	Test Environments	9
2.10	Test results	10
3	**Technical Requirement**	**11**
3.1	Antenna Power	11
3.2	Tolerances for Antenna Power	13
3.3	Frequency Tolerance	15
3.4	Occupied Frequency Bandwidth	17
3.5	Spread Bandwidth	19
3.6	Transmitter Spurious Emissions (Conducted) (For transmitter)	21
3.7	Secondary Radiated Emissions (Conducted) (For receiver)	23
3.8	Interference prevention function	25

1 General Information

1.1 Notes

The results of this test report relate exclusively to the item tested as specified in chapter “Description of test item” and are not transferable to any other test items.

Eurofins Electrical Testing Service (Shenzhen) Co., Ltd. is not responsible for any generalisations and conclusions drawn from this report. Any modification of the test item can lead to invalidity of test results and this test report may therefore be not applicable to the modified test item.

The test report may only be reproduced or published in full. Reproducing or publishing extracts of the report requires the prior written approval of the Eurofins Electrical Testing Service (Shenzhen) Co., Ltd.

This document is subject to the General Terms and Conditions and the Testing and Certification System of Eurofins Electrical Testing Service (Shenzhen) Co., Ltd., available on request or accessible at www.eurofins.com.

Operator:

2025-07-02		Bruce Zheng / Project Engineer	Bruce Zhong
Date	Eurofins-Lab.	Name / Title	Signature

Technical responsibility for area of testing:

2025-07-02		Albert Xu / Lab Manager	Albert Xu
Date	Eurofins-Lab.	Name / Title	Signature

1.2 Testing laboratory

Eurofins Electrical Testing Service (Shenzhen) Co., Ltd.
1st Floor, Building 2, Chungu, Meisheng Huigu Science and Technology Park, No. 83 Dabao Road, Bao'an District, Shenzhen. P.R.China.
Telephone : +86-755-82911867
Fax : +86-755-82910749
The Laboratory has passed the Accreditation by the American Association for Laboratory Accrediation (A2LA). The Accreditation number is 5376.01.
The Laboratory has been listed by industry Canada to perform electromagnetic emission measurements, The CAB identifier is CN0088.

1.3 Details of approval holder

Name	:	HAC3 TRADE CO.,LTD
Address	:	5-9-10 Hishie Higashi-Osaka-shi,Osaka Japan 578-0984
Telephone	:	./.
Fax	:	./.

1.4 Details of Manufacturer

Name	:	BAO LAI COMPANY LIMITED
Address	:	No. 169, Chunhui Road, Yinzhou District, Ningbo City ,CHINA
Telephone	:	./.
Fax	:	./.

複製禁止

1.5 Application details

Date of receipt of application	:	2025-06-03
Date of receipt of test item	:	2025-06-03
Date of test	:	2025-06-03 to 2025-07-02
Date of issue	:	2025-07-02

1.6 Test item

Product type	:	Search TAG
Model name	:	HAC4380A, HAC4418A
Brand	:	./.
Serial number	:	./.
Sample ID	:	250604-18-003
Ratings	:	DC 3V
Test voltage	:	DC 3V
Additional information	:	./.

RadioTechnical data

Frequency range	:	2402MHz – 2480MHz
Radio Tech.	:	2.4GHz Bluetooth Low Energy
Frequency channel	:	40 Channels
Modulation	:	Internal antenna
Antenna type and max gain	:	0 dBi

The above sample(s) and sample information was/were submitted and identified on behalf of the applicant.
Eurofins assures objectivity and impartiality of the test, and fulfills the obligation of confidentiality for applicant's commercial information and technical documents.

複製禁止

1.7 Standards

Standards	
Article 2 paragraph 1 item (19)	Low power data communications system in the 2.4GHz band
ARIB STD-T66 V3.7	SECOND GENERATION LOW POWER DATA COMMUNICATION SYSTEM/ WIRELESS LAN SYSTEM

2 Technical test

2.1 Summary of test results

No deviations from the technical specification(s) were ascertained in the course of the tests performed. ☒

or

The deviations as specified were ascertained in the course of the tests performed. ☐

2.2 Test environment

Temperature	: 20	...	25°C
Relative humidity content	: 30	...	60%
Air pressure	: 100	...	101kPa

2.3 Measurement uncertainty

The uncertainty is calculated using the methods suggested in the "Guide to the Expression of Uncertainty in Measurement" (GUM) published by ISO.

System Measurement Uncertainty	
Test Items	Extended Uncertainty
Uncertainty for Conducted RF test	RF Power Conducted: 1.16dB Frequency test involved: 1.05×10-7 or 1%

2.4 Test mode

The EUT was set at continuously transmitting and receiving mode (CH0, CH19, CH39) during the test.

EUT test voltage requirement:
The RF unit is supplied by DC power. The fluctuation of input voltage to the circuit of RF unit of test equipment is under ±1%, when input voltage from DC 3V to the test equipment is fluctuated by ±10%, So, the DC 3V is choosed in the test report.

The measurement result of the voltage fluctuation at RF circuit when DC 3V +/- 10%.

DC Input	DC 2.2V
2.7V	2.2V
3V	2.2V
3.3V	2.2V

2.5 Test equipment utilized

EQUIPMENT ID	EQUIPMENT NAME	MODEL NO.	CAL. DATE	CAL. DUE DATE
23-2-13-12	Signal Analyzer	N9010B-544	2025-03-26	2026-03-26
23-2-13-14	Signal Generator	N5183B-520	2025-03-26	2026-03-26
23-2-10-43	Switch and Control Unit	ERIT-E-JS0806-2	2025-03-26	2026-03-26
23-2-10-44	DC power supply	E3642A	2025-03-26	2026-03-26
23-2-10-50	Temperature & Humidity Meter	COS-03	582951	2026-03-26
23-1-07-001	Digital multimeter	FLUKE-179	2025-03-26	2026-03-26

Remark:
1. Calibration conducted by the National Institute of Information and Communications Technology (NICT)in Japan (hereinafter referred to as "NICT") or a designated calibration agency under Article102-18paragraph (1) in JRL.
2. Correction conducted pursuant to the provisions of Article 135 or Article 144 of the Measurement Act (Act No. 51 of 1992).
3. Calibration conducted in countries except Japan, which shall be equivalent to the calibration conducted by the NICT or a designated calibration agency under Article 102-18 paragraph (1).
4. Calibration, etc. conducted by using measuring instruments and other equipment listed in the right column of appended table No. 3, which shall have been given any type of calibration, etc. listed above from (a) to (C)From JRL Article 24-2, paragraph 4, Item 2.
5. All calibration reports are from CCIC (Shenzhen) Metrology & Testing Service Co.,Ltd.

2.6 Auxiliary Equipment Used during Test:

DESCRIPTION	MANUFACTURER	MODEL NO.	S/N
Laptop	LENOVO	TP00096A	PF-1QH0LV

2.7 Test software information:

Test Software Version	nRF DTM		
Modulation	Setting TX Power	TX Pattern	Packet Type
GFSK	4	TX Packet	BLE/1M, 2M

2.8 Customized Configurations

EUT Conf.	Signal Description	Operating Frequency	Duty Cycle
2402	GFSK	Ch No. 0	82.7%
2440	GFSK	Ch No. 19	82.7%
2480	GFSK	Ch No. 39	82.7%

2.9 Test Environments

Enviroment Parameter	Temperature	Voltage	Relative Humidity
101.7Kpa	26.1℃	DC 3V	53.3%

2.10 Test results

☒ 1st test ☐ test after modification ☐ production test

Conformance requirement according to Article 2 paragraph 1 item (19) and ARIB STD-T66 Version 3.7/2014-10		Result	Test site
Essential parameter	**Corresponding technical requirements**		
Transmitter requirements	**3.2 (2) Antenna Power**	**PASS**	**Site 1**
	3.2 (3) Tolerances for Antenna Power	**PASS**	**Site 1**
	3.2 (4) Frequency Tolerance	**PASS**	**Site 1**
	3.2 (5) Transmission Rate	**N/A***	**N/A**
	3.2 (7) Occupied Frequency Bandwidth	**PASS**	**Site 1**
	3.2 (8) Spread Bandwidth	**PASS**	**Site 1**
	3.2 (9) Process Gain	**PASS**	**Site 1**
	3.2 (10) Number of Carriers	**N/A***	**N/A**
	3.2 (11) Dwell Time	**N/A***	**N/A**
	3.2 (6) Spurious Emissions	**PASS**	**Site 1**
Receiver requirements	**3.5 (1) Secondary Radiated Emissions**	**PASS**	**Site 1**
	3.4 (1) Interference prevention function	**PASS**	**Site 1**

NOTE 1: Measurement taken is within the measurement uncertainty of measurement system.
NOTE 2: "*" N/A is an abbreviation for Not Applicable.
NOTE 3: Test method: MIC notification. No.88 of 2004, Annex 43.

3 Technical Requirement

3.1 Antenna Power

3.1.1 Test Method

1. Connect EUT test port to spectrum analyzer.
2. Set the EUT to transmit maximum output power at 2.4GHz.
3. Then set the EUT to transmit at Highest, Middle, and Lowest frequency and measure the conducted output power separately.
4. RBW=1MHz, VBW≥RBW, Sweep = auto, Detector function = Positive peak, Trace = max hold
5. Repeat above procedures until all frequencies measured were complete.

3.1.2 Test Setup:

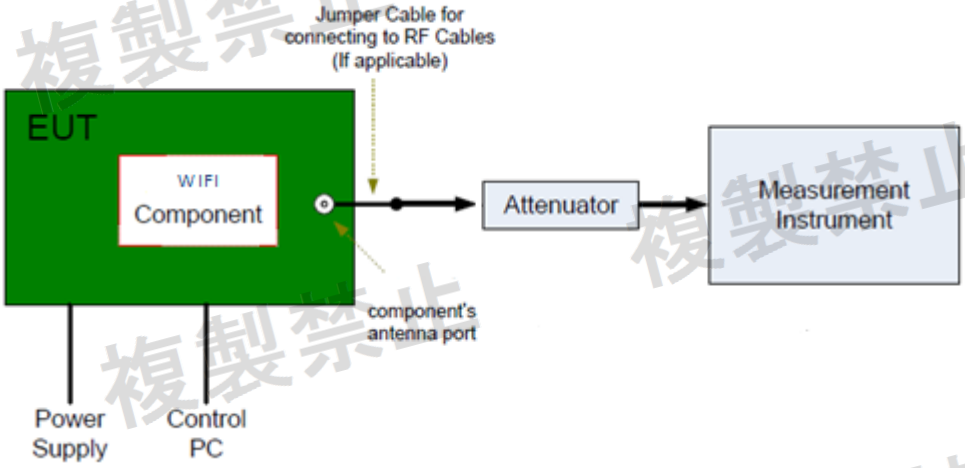

3.1.3 Limit (ARIB STD-T66/ARIB STD-T33, Clause 3.2 (2)-a)

a. The antenna power of a transmitting equipment (with a frequency band of 2,427 – 2,470.75 MHz, for spread spectrum systems using FH systems, hybrid systems of DS and FH, or hybrid systems of FH and OFDM) shall be such that the mean power within a bandwidth of 1 MHz is 3 mW or less in the case of modulation using a standard coding test signal with the same transmission rate as that of the modulation signal.

b. The antenna power of a transmitting equipment using a spread spectrum system other than any of those in “a” and the OFDM system shall be such that the mean power within a bandwidth of 1 MHz is 10 mW or less in the case of modulation using a standard coding test signal with the same transmission rate as that of the modulation signal.

3.1.4 Test result

Antenna Power							
Test Condition	TestMode	Antenna	Freq (MHz)	Result (dBm)	Result(mW)	Limit (mW)	Verdict
NTNV	BLE_1M	Ant1	2402	-4.34	0.368	≤10	PASS
			2440	-3.90	0.407	≤10	PASS
			2480	-4.16	0.384	≤10	PASS
	BLE_2M	Ant1	2402	-2.79	0.526	≤10	PASS
			2440	-2.44	0.570	≤10	PASS
			2480	-2.79	0.526	≤10	PASS

EIRP							
Test Condition	TestMode	Antenna	Freq (MHz)	Result(dBm)	EIRP(dBm)	Limit(dBm)	Verdict
NTNV	BLE_1M	Ant1	2402	-4.34	-4.34	≤12.14	PASS
			2440	-3.90	-3.90	≤12.14	PASS
			2480	-4.16	-4.16	≤12.14	PASS
	BLE_2M	Ant1	2402	-2.79	-2.79	≤12.14	PASS
			2440	-2.44	-2.44	≤12.14	PASS
			2480	-2.79	-2.79	≤12.14	PASS

3.2 Tolerances for Antenna Power

3.2.1 Test Method

6. Connect EUT test port to spectrum analyzer.
7. Set the EUT to transmit maximum output power at 2.4GHz.
8. Then set the EUT to transmit at Highest, Middle, and Lowest frequency and measure the conducted output power separately.
9. RBW=1MHz, VBW≥RBW, Sweep = auto, Detector function = Average, Meas=channel power Meas setup=1MHz, Trace = max hold
10. Repeat above procedures until all frequencies measured were complete.

3.2.2 Test Setup:

The WIFI component's antenna ports(s) of the EUT are connected to the measurement instrument per an appropriate attenuator. The EUT is controlled by PC/software to emit the specified signals for the purpose of measurements.

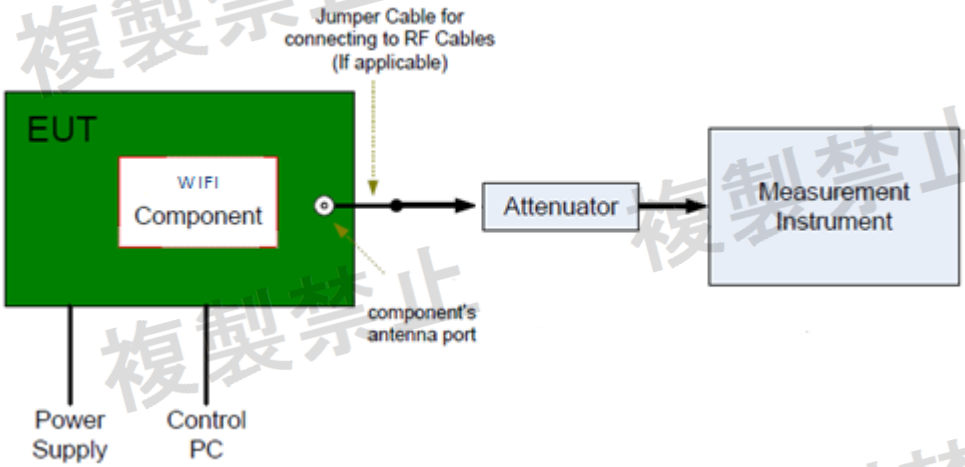

3.2.3 Limit (ARIB STD-T66/ARIB STD-T33, Clause 3.2 (3)

Upper and lower limits of the tolerance for antenna power shall be 20% and 80%, respectively. Note that they represent the tolerance for the maximum rated antenna power and that no upper and lower limits of the tolerance are regulated in the case of antenna power reduction for communications reasons.

3.2.4 Test result

Tolerance								
Test Condition	Test Mode	Antenna	Freq (MHz)	Power (mW)	RatedPower (mW)	Result (%)	Limit (%)	Verdict
NTNV	BLE_1M	Ant1	2402	0.368	1	-63.20	-80 to +20	PASS
			2440	0.407	1	-59.30	-80 to +20	PASS
			2480	0.384	1	-61.60	-80 to +20	PASS
	BLE_2M	Ant1	2402	0.526	1	-47.40	-80 to +20	PASS
			2440	0.570	1	-43.00	-80 to +20	PASS
			2480	0.526	1	-47.40	-80 to +20	PASS

Note: Deviation = (Output power – Declared Output Power) / Declared Output Power * 100%

3.2.5 Result

The equipment met the requirement of this clause.

3.3 Frequency Tolerance

3.3.1 Test Method:

1. Connect EUT test port to spectrum analyzer.
2. Set the EUT to transmit maximum output power at 2.4GHz.
3. Then set the EUT to transmit at Highest, Middle, and Lowest frequency and measure the conducted output power separately.
4. RBW=10kHz, VBW≥RBW, Sweep = auto, Detector function = peak, Trace = max hold
5. Repeat above procedures until all frequencies measured were complete.

3.3.2 Test Setup:

The WIFI component's antenna ports(s) of the EUT are connected to the measurement instrument per an appropriate attenuator. The EUT is controlled by PC/software to emit the specified signals for the purpose of measurements.

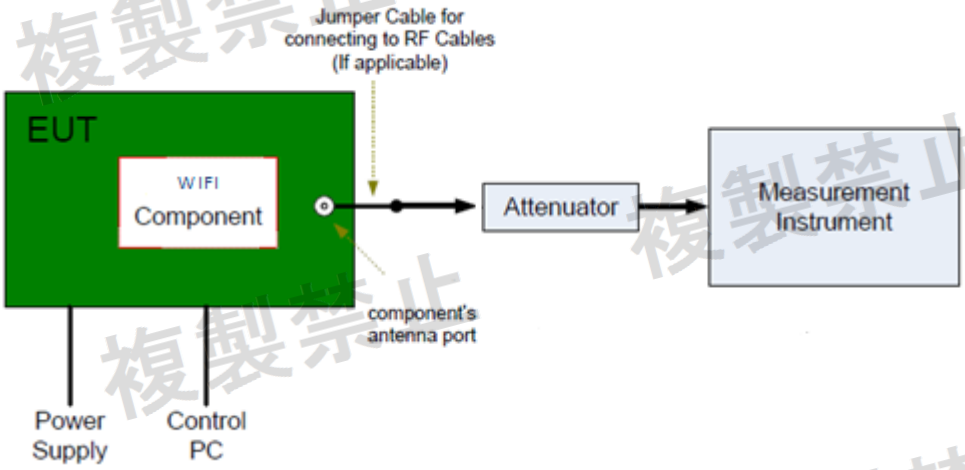

3.3.3 Limit (ARIB STD-T66/ ARIB STD-T33, Clause 3.2 (4))

Tolerance of frequency: $\pm 50 \times 10^{-6}$.

3.3.4 Test Result

TestCondi-tion	Antenna	Freq(MHz)	CenterFreq [MHz]	Result[ppm]	Limit[ppm]	Verdict
NTNV	Ant1	2402	2401.988	-4.99584	±50	PASS
		2440	2439.988	-6.14754	±50	PASS
		2480	2479.988	-6.04839	±50	PASS

Note: Frequency Tolerance (ppm) = [Measurement Frequency - Center Frequency] / Center Frequency*10^6

Test Result: Pass

Please refer to the appendix A for test plots
The equipment met the requirement of this clause.

3.4 Occupied Frequency Bandwidth

3.4.1 Test Method:

1. Connect EUT test port to spectrum analyzer.
2. Set the EUT to transmit maximum output power at 2.4GHz.
3. Then set the EUT to transmit at Highest, Middle, and Lowest frequency separately.
4. Set Ocuppied bandwidth 99%
5. Set RBW=300KHz , VBW ≥ RBW.
6. Set Sweep = auto.
7. Set Detector function = peak.
8. Allow the trace to stabilize.
9. Repeat above procedures until all frequencies measured were complete.

3.4.2 Test Setup:

The WIFI component's antenna ports(s) of the EUT are connected to the measurement instrument per an appropriate attenuator. The EUT is controlled by PC/software to emit the specified signals for the purpose of measurements.

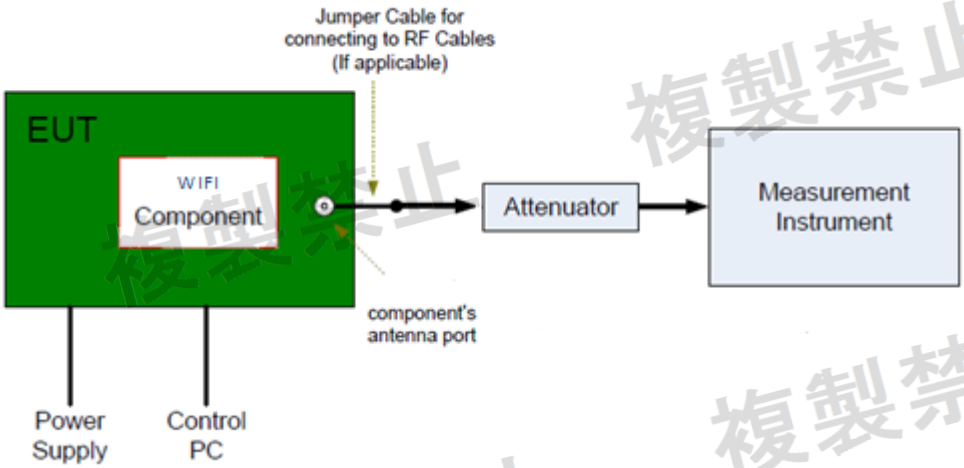

3.4.3 Limit (ARIB STD-T66/ARIB STD-T33, Clause 3.2 (7))

Permissible value for occupied bandwidth using the FH system, a hybrid system combining DS and FH systems, or a hybrid system combining FH and OFDM systems shall be 83.5 MHz or less, while necessary bandwidth (minimum occupied bandwidth sufficient to ensure information transmission of required quality at a required transmission rate for the system used under specified conditions for a given emission type) using a system other than any of the above shall be 26 MHz or less.

3.4.4 Test Result

Test Condition	TestMode	Antenna	Freq(MHz)	Result [MHz]	Limit [MHz]	Verdict
NTNV	BLE_1M	Ant1	2402	1.442	≤26	PASS
			2440	1.528	≤26	PASS
			2480	1.487	≤26	PASS
	BLE_2M	Ant1	2402	2.387	≤26	PASS
			2440	2.494	≤26	PASS
			2480	2.476	≤26	PASS

Test Result: Pass

Please refer to the appendix C for test plots
The equipment met the requirement of this clause.

3.5 Spread Bandwidth and spreading factor

3.5.1 Test Method:

1. Connect EUT test port to spectrum analyzer.
2. Set the EUT to transmit maximum output power at 2.4GHz.
3. Then set the EUT to transmit at Highest, Middle, and Lowest frequency separately.
4. Set Ocuppied bandwidth 90%
5. Set analyzer center frequency to DTS channel center frequency.
6. Detector = peak.
7. Sweep time = auto couple.
8. Trace mode = max hold.
9. Allow trace to fully stabilize.
10. Repeat above procedures until all frequencies measured were complete.

3.5.2 Test Setup:

The WIFI component's antenna ports(s) of the EUT are connected to the measurement instrument per an appropriate attenuator. The EUT is controlled by PC/software to emit the specified signals for the purpose of measurements.

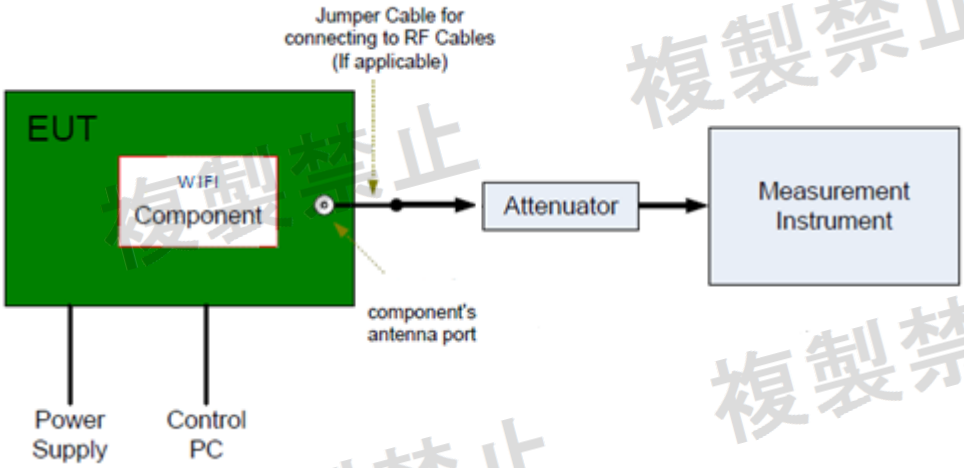

3.5.3 Limit (ARIB STD-T66/ARIB STD-T33, Clause 3.2 (8))

In spread spectrum systems, spread bandwidth (which refers to a frequency bandwidth with an upper limit and lower limit such that each of the mean powers radiated above the upper frequency limit and below the lower frequency limit is equal to 5 % of the total mean power radiated; this also applies hereafter) shall be 500 kHz or more.

Process gain (value obtained by dividing the spread bandwidth by a frequency equal to the transmission rate of the modulation signal; this also applies hereafter) in the spread spectrum system shall be 5 or more.

3.5.4 Test Result

Test Condition	TestMode	Antenna	Freq(MHz)	Result [MHz]	Limit [MHz]	Verdict
NTNV	BLE_1M	Ant1	2402	0.913	≥0.5	PASS
			2440	0.935	≥0.5	PASS
			2480	0.932	≥0.5	PASS
	BLE_2M	Ant1	2402	1.536	≥0.5	PASS
			2440	1.643	≥0.5	PASS
			2480	1.627	≥0.5	PASS

Test Result: Pass

Please refer to the appendix D for test plots
The equipment met the requirement of this clause.

複製禁止

3.6 Transmitter Spurious Emissions (Conducted) (For transmitter)

Test Method:

1. Connect EUT test port to spectrum analyzer.
2. Set the EUT to transmit maximum output power at 2.4GHz.
3. Then set the EUT to transmit at Highest, Middle, and Lowest frequency separately.
4. Set Freqeucny range and limit: 2,387MHz ≤ f ≤ 2,400MHz and 2,483.5MHz < f ≤ 2,496.5MHz 25 μW or less b. 2,387MHz > f and 2,496.5MHz < f 2.5 μW or less
5. Set RBW = 1MHz, VBW ≥ RBW.
6. Set Sweep = auto.
7. Set Detector function = peak.
8. Allow the trace to stabilize.
9. Repeat above procedures until all frequencies measured were complete.

Test Setup:

The WIFI component's antenna ports(s) of the EUT are connected to the measurement instrument per an appropriate attenuator. The EUT is controlled by PC/software to emit the specified signals for the purpose of measurements.

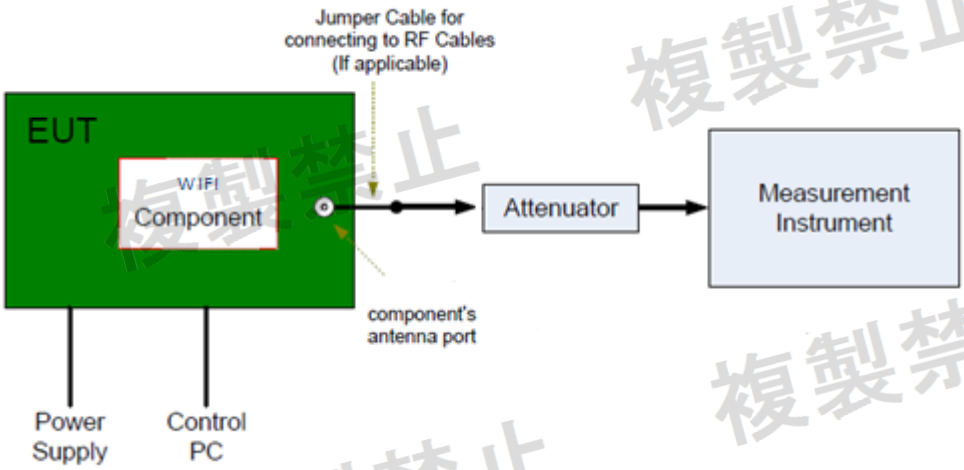

3.6.1 Limit (ARIB STD-T66/ARIB STD-T33, Clause 3.2 (6))

ARIB STD-T66

Permissible mean power of spurious emission of each frequency supplied to a feeder, that is, mean power of spurious emission in the 1 MHz bandwidth at frequency f other than frequency band used shall be as follows: a. 2,387MHz ≤ f ≤ 2,400MHz and 2,483.5MHz < f ≤ 2,496.5MHz 25 μW or less b. 2,387MHz > f and 2,496.5MHz < f 2.5 μW or less.

ARIB STD-T33

Permissible mean power of spurious emission of each frequency supplied to a feeder, that is, mean power of spurious emission in the 1 MHz bandwidth at frequency f other than frequency band used shall be as follows: a. 2,458MHz ≤ f ≤ 2,471MHz and 2,497MHz < f ≤ 2,510MHz 25 μW or less b. 2,458MHz > f and 2,510MHz < f 2.5 μW or less.

3.6.2 Test Result

TestCondi-tion	Test-Mode	Antenna	Freq(MHz)	Freq.Range [MHz]	Freq. [MHz]	Result [dBm]	Limit [dBm]	Result [μW]	Limit [μW]	Verdict
NTNV	BLE_1M	Ant1	2402	30~1000	894.76	-48.48	≤-26	0.01419	≤2.5	PASS
				1000~2387	2347.12	-46.59	≤-26	0.02193	≤2.5	PASS
				2387~2400	2400.00	-29.93	≤-16	1.01625	≤25	PASS
				2483.5~2496.5	2492.07	-36.33	≤-16	0.23281	≤25	PASS
				2496.5~13000	4803.59	-29.03	≤-26	1.25026	≤2.5	PASS
			2440	30~1000	911.73	-48.56	≤-26	0.01393	≤2.5	PASS
				1000~2387	2271.19	-46.71	≤-26	0.02133	≤2.5	PASS
				2387~2400	2388.75	-36.84	≤-16	0.20701	≤25	PASS
				2483.5~2496.5	2495.68	-36.04	≤-16	0.24889	≤25	PASS
				2496.5~13000	4879.74	-29.95	≤-26	1.01158	≤2.5	PASS
			2480	30~1000	867.84	-47.97	≤-26	0.01596	≤2.5	PASS
				1000~2387	2371.74	-46.77	≤-26	0.02104	≤2.5	PASS
				2387~2400	2390.51	-37.11	≤-16	0.19454	≤25	PASS
				2483.5~2496.5	2489.64	-36.43	≤-16	0.22751	≤25	PASS
				2496.5~13000	4959.57	-29.30	≤-26	1.17490	≤2.5	PASS
	BLE_2M	Ant1	2402	30~1000	760.17	-48.15	≤-26	0.01531	≤2.5	PASS
				1000~2387	2374.52	-46.27	≤-26	0.02360	≤2.5	PASS
				2387~2400	2399.99	-18.70	≤-16	13.4896	≤25	PASS
				2483.5~2496.5	2485.56	-36.51	≤-16	0.22336	≤25	PASS
				2496.5~13000	4803.07	-27.73	≤-26	1.68655	≤2.5	PASS
			2440	30~1000	713.12	-48.46	≤-26	0.01426	≤2.5	PASS
				1000~2387	2238.94	-46.80	≤-26	0.02089	≤2.5	PASS
				2387~2400	2387.78	-36.42	≤-16	0.22803	≤25	PASS
				2483.5~2496.5	2489.21	-36.44	≤-16	0.22699	≤25	PASS
				2496.5~13000	4878.69	-28.56	≤-26	1.39316	≤2.5	PASS
			2480	30~1000	886.27	-48.90	≤-26	0.01288	≤2.5	PASS
				1000~2387	2379.72	-46.45	≤-26	0.02265	≤2.5	PASS
				2387~2400	2394.71	-36.90	≤-16	0.20417	≤25	PASS
				2483.5~2496.5	2483.57	-36.28	≤-16	0.23550	≤25	PASS
				2496.5~13000	4959.05	-28.06	≤-26	1.56315	≤2.5	PASS

3.6.3 Result

Please refer to the appendix E for test plots
The equipment met the requirement of this clause.

3.7 Secondary Radiated Emissions (Conducted) (For receiver)

Test Method:
The test method was refered to the subclause 11.13.3.4 of ANSI C63.10-2013.

1. Connect EUT test port to spectrum analyzer.
2. Set the EUT to transmit maximum output power at 2.4GHz.
3. Then set the EUT to transmit at Highest, Middle, and Lowest frequency separately.
4. Set Frequency range and limit: 30MHz - 1 GHz and 20 nW or 1 GHz – 13GHz
5. Set RBW ≥ 1MHz, VBW ≥ RBW.
6. Set Sweep = auto.
7. Set Detector function = peak.
8. Allow the trace to stabilize.
9. Repeat above procedures until all frequencies measured were complete.

Test Setup:
The WIFI component's antenna ports(s) of the EUT are connected to the measurement instrument per an appropriate attenuator. The EUT is controlled by PC/software to emit the specified signals for the purpose of measurements.

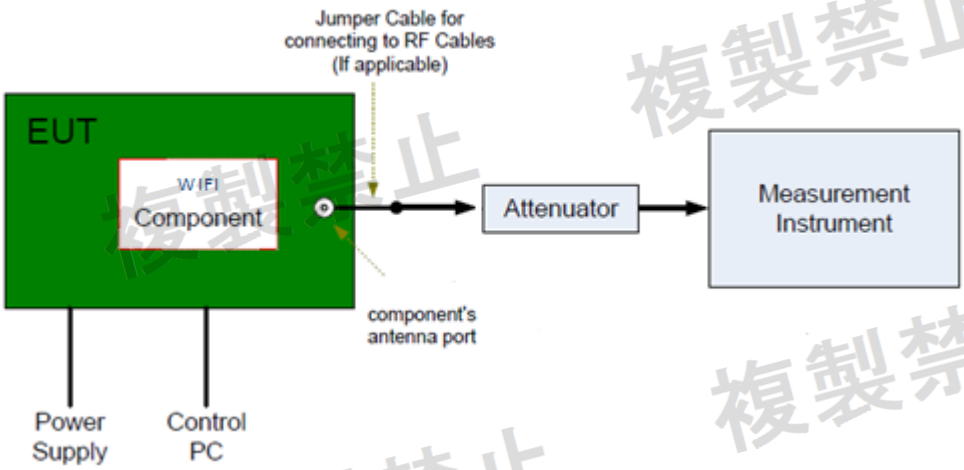

3.7.1 Limit (ARIB STD-T66/ARIB STD-T33, Clause 3.5 (1))

The limit on secondary emissions radiated from the receiving equipment within which the function of other radio equipment will not be impaired shall be, in terms of the power of a dummy antenna circuit that has the same electrical constant as the receiving antenna, 4 nW or less at a frequency below 1 GHz and 20 nW or less at a frequency of 1 GHz or higher as measured using the circuit.

3.7.2 Test Result

TestCondi-tion	Test-Mode	Antenna	Freq (MHz)	Freq.Range [MHz]	Freq. [MHz]	Result [dBm]	Limit [dBm]	Result [nW]	Limit [nW]	Ver-dict
NTNV	BLE_1M	Ant1	2402	30~1000	906.40	-69.97	≤-54	0.10069	≤4	PASS
				1000~12500	4970.95	-64.91	≤-47	0.32285	≤20	PASS
			2440	30~1000	772.05	-70.15	≤-54	0.09661	≤4	PASS
				1000~12500	3799.10	-64.28	≤-47	0.37325	≤20	PASS
			2480	30~1000	898.64	-70.54	≤-54	0.08831	≤4	PASS
				1000~12500	3827.28	-64.85	≤-47	0.32734	≤20	PASS
	BLE_2M	Ant1	2402	30~1000	911.25	-70.04	≤-54	0.09908	≤4	PASS
				1000~12500	3808.30	-64.57	≤-47	0.34914	≤20	PASS
			2440	30~1000	790.97	-69.61	≤-54	0.10940	≤4	PASS
				1000~12500	3674.90	-64.05	≤-47	0.39355	≤20	PASS
			2480	30~1000	904.94	-69.82	≤-54	0.10423	≤4	PASS
				1000~12500	3837.63	-64.92	≤-47	0.32211	≤20	PASS

3.7.3 Result

Please refer to the appendix F for test plots
The equipment met the requirement of this clause.

3.8 Interference prevention function

3.8.1 Limit

Item	Limits
Identification Code	≥48 bits

Measuring ID code Software
MAC IP List: MAC Scan

3.8.2 Test Procedure

1. In the case that the EUT has the function of automatically transmitting the identification code: a. Transmit the predetermined identification codes form EUT. b. Check the transmitted identification codes with the demodulator.
2. In the case of receiving the identification code: a. Transmit the predetermined identification codes form the counterpart. b . Check if communication is normal. c. Transmit the signals other than predetermined ID codes form the counterpart. d. check if the EUT stops the transmission, or if it displays that identification codes are different from the predetermined ones.

3.8.3 Conditions of Equipment under Test

Required normal mode of the applicable equipment (EUT)

3.8.4 TEST RESULTS

The radio equipment has an identification code. A verification of this code is done before a communication channel is established

MAC Address: 90B0EA242151

TEST RESULTS: PASS

End