# Dell Edge Gateway

## 5000 Series

# Installation and Operation Manual

Computer Model: Dell Edge Gateway 5000\5100
Regulatory Model: N01G\N02G
Regulatory Type: N01G001\N02G001

# Notes, cautions, and warnings

NOTE: A NOTE indicates important information that helps you make better use of your product.

CAUTION: A CAUTION indicates either potential damage to hardware or loss of data and tells you how to avoid the problem.

WARNING: A WARNING indicates a potential for property damage, personal injury, or death.

**Copyright © 2017 Dell Inc. or its subsidiaries. All rights reserved.** Dell, EMC, and other trademarks are trademarks of Dell Inc. or its subsidiaries. Other trademarks may be trademarks of their respective owners.

2017 - 05

Rev. A02

# Contents


1 Overview ..... 6

2 System views ..... 7

System—Front ..... 7

System—Front (LED indicators) ..... 8

System—Bottom ..... 8

Serial port (RS232) connector mapping ..... 9

CANbus port connector mapping ..... 9

RS485 connector mapping ..... 9

RS422/485 connector mapping ..... 10

System—Bottom (DIP switches) ..... 10

System—Top ..... 11

Intrusion-detection connector mapping ..... 11

HDMI connector mapping ..... 12

System—Left ..... 13

24 V AC/DC power port ..... 14

19.5 V DC power adapter port ..... 14

System—Right ..... 15

3 Setting up your Dell Edge Gateway ..... 16

Professional installation instructions ..... 16

Instructions d'installation professionnelles ..... 17

Federal Communication Commission Interference Statement ..... 17

Industry Canada Statement ..... 18

Setting up the Edge Gateway ..... 19

Powering on the Edge Gateway ..... 19

Mounting the Edge Gateway on the wall ..... 22

Mounting the Edge Gateway on a DIN rail ..... 24

Inserting a micro-SIM card and activating your mobile broadband ..... 26

4 Setting up your operating system ..... 30

Windows 10 LTSB 2015 ..... 30

Overview ..... 30

Boot up and login ..... 30

Restoring Windows 10 IoT Enterprise LTSB 2015 ..... 30

Windows 10 IOT Enterprise LTSB 2015 basic functions ..... 30

Common port mappings ..... 31

Snappy Ubuntu Core 15 and 16 ..... 32

Overview ..... 32

Boot up and log in ..... 32

Restoring Ubuntu Snappy ..... 33

Updating operating system and applications ..... 33

Ubuntu core OS basic function....34
UEFI capsule update....35
Watchdog Timer....35
Trusted Platform Module....35
Snappy Auto update....35
Cloud LED On/Off....35
Serial Port....36
Expansion IO Module....36
Zigbee....36
Controller Area Network....36
Network Manager – Ubuntu Core 15....37
Network Manager – Ubuntu Core 16....38
Flashing a new OS Image....39
Flashing the BIOS....40
Wind River Linux....40
Overview....40
Boot up and login....40
Restoring Wind River Linux....41
Wind River Linux Basic Functions....42

**5 System specifications....56**
Component types....56
Operating systems....56
Processor....56
Memory....57
Drives and removable storage....57
Communications—WLAN antenna....57
Communications—WWAN antenna....59
Graphics/video controller....63
External ports and connectors....63
Dimensions and weight....64
Product dimensions and weight....64
Packaging dimensions and weight....64
Mounting dimensions....64
Environmental and operating conditions....65
Environmental conditions—System....65
Environmental conditions—IO module....65
Environmental conditions - Power module....67
Environmental conditions - Enclosure....68
Operating conditions....68
Power....69
Power adaptor (optional)....69
3.0 V CMOS coin-cell battery....69
Security....70
Software....70
Environmental....70

Service and support ..... 70

6 I/O Module Overview ..... 72
IO module (optional) views ..... 72
IO module—Front ..... 72
IO module—Top ..... 73
IO module—Bottom ..... 74
Setting up the IO module ..... 74
Installing the PCIe card into the IO module ..... 77

7 Power Module Overview ..... 80
Power module (optional) views ..... 80
Power module—Front ..... 81
Power module—Bottom ..... 82
Power module—Top ..... 84
Power module—Right ..... 85
Setting up the power module ..... 85
Specifications - Power Module ..... 88

8 Enclosure Overview ..... 90
Enclosure (optional) view ..... 90
Enclosure - Side ..... 90
Setting up the enclosure ..... 91

9 Setting up the ZigBee dongle ..... 96

10 BIOS defaults ..... 97
System configuration ..... 97
Performance ..... 97
Security ..... 97
Power management ..... 98
Maintenance ..... 98
POST behavior ..... 99
Cloud desktop ..... 99
Wireless ..... 99

11 Other documents you may need ..... 100

12 Contacting Dell ..... 101
Regulatory and environmental compliance ..... 101

1

# Overview

The Dell Edge Gateway 5000/5100 series allows you to connect (wired or wireless) to network enabled devices and manage them remotely in your existing network ecosystem. The system can be either mounted on the wall using the Dell approved wall mount kit or mounted into your existing rack infrastructure using the DIN-rail mounting bracket. The system is running on Windows 10 Enterprise, Ubuntu Snappy, and Wind River Linux operating systems. As part of a complete interoperable building automation system, Edge Gateway provides precise monitoring and control of connected points. I/O expansion module provide the Edge Gateway with additional inputs and output module. The power expansion module provide the Edge Gateway with power redundancy options by allowing you to connect a 24V AC/DC, a 19.5V DC, and a battery backup simultaneously.

If the Edge Gateway is setup as a web server, it offers the capability for configuration from a web browser. Configure I/Os, set-up objects, and monitor present values via a browser.

2

# System views

## System—Front

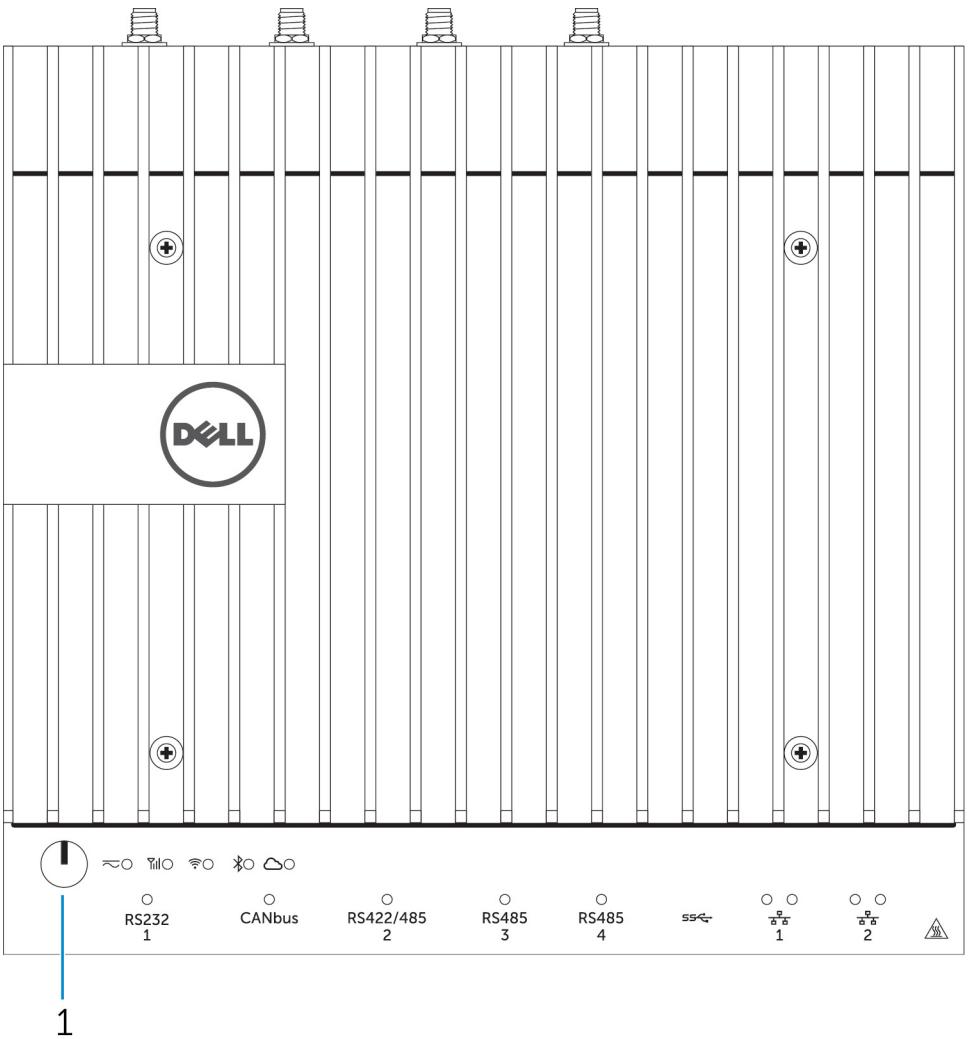


| Features | | |
|---|---|---|
| 1 | Power button | Press and hold for 2 seconds to turn on the system if it is turned off. |

**NOTE: For more details about the LED indicators on the front of the system, see LED indicators.**

# System—Front (LED indicators)

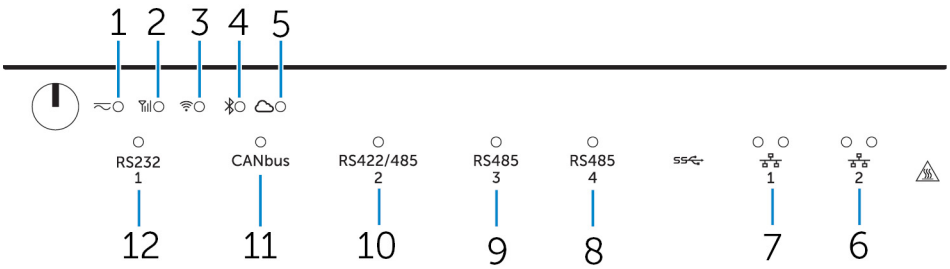


| Features | | |
|---|---|---|
| 1 | Power status LED | Indicates the power-state of the system. |
| 2 | Mobile broadband status LED | Indicates the mobile broadband status and network activity. |
| 3 | Wireless status LED | Indicates the wireless connectivity status and network activity. |
| 4 | Bluetooth status LED | Indicates the Bluetooth status and activity. |
| 5 | Cloud connection status LED | Indicates the cloud connection status. |
| 6 | Network status LED | Indicates the connectivity status and network activity. |
| 7 | Network status LED | Indicates the connectivity status and network activity. |
| 8 | RS485 port status LED | Provides the status of the RS485 port connections. |
| 9 | RS485 port status LED | Provides the status of the RS485 port connections. |
| 10 | RS422/485 port status LED | Provides the status of the RS422/485 port connections. |
| 11 | CANbus port status LED | Provides the status of the CANbus port connection. |
| 12 | Serial port status LED | Provides the status of the serial port connection. |

# System—Bottom

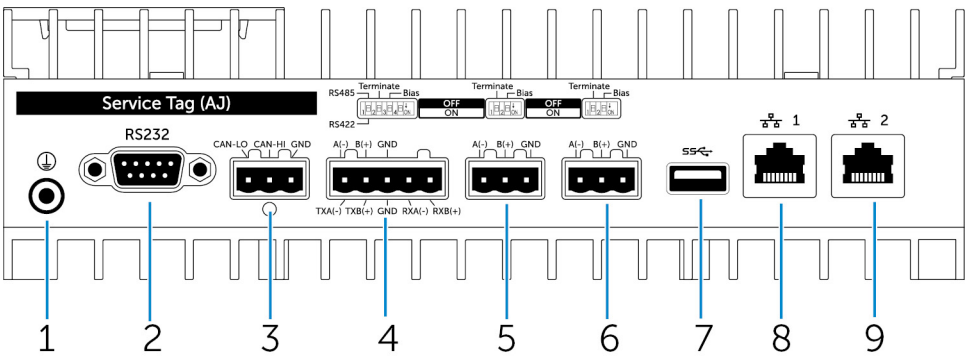


| Features | | |
|---|---|---|
| 1 | Earth ground | Connect the grounding cable to the system. |
| 2 | Serial port | Connect to a serial port enabled device such as a printer. |
| 3 | CANbus port | Connect to a CANbus port enabled device or dongle. |
| 4 | RS422/485 port | Connect a RS422/485 device. |

| Features | | |
|---|---|---|
| 5 | RS485 port | Connect a RS485 device. |
| 6 | RS485 port | Connect a RS485 device. |
| 7 | USB 3.0 port | Connect a USB 3.0 device. |
| 8 | Network port | Connect an Ethernet (RJ45) cable from a router or a broadband modem for network or internet access. |
| 9 | Network port | Connect an Ethernet (RJ45) cable from a router or a broadband modem for network or internet access. |

**NOTE: For more details about the DIP switches on the bottom of the system, see DIP switches.**

**NOTE: For RS422 and RS485:**

- Termination is 120-ohms between the members of the differential pair when enabled.
- Bias is 4.7k pull-up (5V) / pull-down (Gnd) when enabled.

## Serial port (RS232) connector mapping

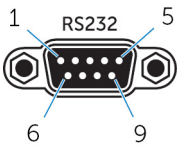


| Pin | Signal | Pin | Signal |
|---|---|---|---|
| 1 | DCD | 6 | DSR |
| 2 | RXD | 7 | RTS |
| 3 | TXD | 8 | CTS |
| 4 | DTR | 9 | RI |
| 5 | GND | | |

## CANbus port connector mapping

| PIN | Signal |
|---|---|
| 1 | CAN-LO |
| 2 | CAN-HI |
| 3 | GND |

## RS485 connector mapping

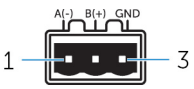

| Pin | Signal |
|---|---|
| 1 | A(-) |
| 2 | B(+) |
| 3 | GND |

### RS422/485 connector mapping

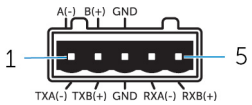


| Pin | Signal |
|---|---|
| 1 | TXA(-) / A(-) |
| 2 | TXB(+) / B(+) |
| 3 | GND |
| 4 | RXA(-) |
| 5 | RXB(+) |

## System—Bottom (DIP switches)

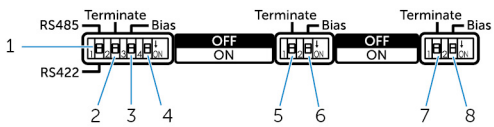


| Feature | | |
|---|---|---|
| 1 | RS422/RS485 port toggle switch | Toggle between RS422 or RS485 standard. |
| 2 | RS422/RS485 port resistor switch | Enable/disable the differential termination resistor. |
| 3 | RS422/RS485 port bias resistor switch | Enable/disable the bias resistor for the RS422/RS485 port. |
| 4 | ePSA diagnostic switch | When the position of the switch changes, the system starts in ePSA (Enhanced Preboot System Assessment) mode on the next start. |
| 5 | RS485 port resistor switch | Enable/disable the differential termination resistor for RS485. |
| 6 | RS485 port bias resistor switch | Enable/disable the bias resistor for the RS485 port. |
| 7 | RS485 port resistor switch | Enable/disable the differential termination resistor for RS485. |
| 8 | RS485 port bias resistor switch | Enable/disable the bias resistor for the RS485 port. |

# System—Top

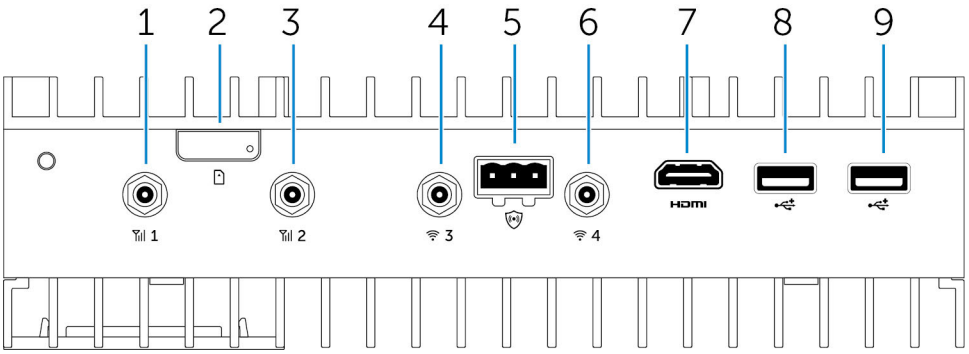


| Features | | |
|---|---|---|
| 1 | Mobile broadband antenna port (port one) | Connect an antenna to increase the range and strength of the mobile broadband signals. |
| 2 | Micro-SIM card slot | Insert a micro-SIM card to connect to a mobile broadband network. |
| 3 | Mobile broadband antenna port (port two) | Connect an antenna to increase the range and strength of the mobile broadband signals. |
| 4 | Wi-Fi antenna port (port three) | Connect an antenna to increase the range and strength of Wi-Fi signals. |
| 5 | Intrusion detection connector | Connect an intrusion detection switch to detect any intrusion into the system. |
| 6 | Wi-Fi antenna port (port four) | Connect an antenna to increase the range and strength of Wi-Fi signals. |
| 7 | HDMI port | Connect a monitor or other HDMI device. Provides video and audio output. Hot-plugging is supported on Windows 10 and Ubuntu only. |
| 8 | USB 2.0 port | Connect a USB 2.0 device. |
| 9 | USB 2.0 port | Connect a USB 2.0 device. |

## Intrusion-detection connector mapping

| Pin | Signal |
|---|---|
| 1 | GND |
| 2 | Intrusion detection |
| 3 | Cable detection |

## HDMI connector mapping

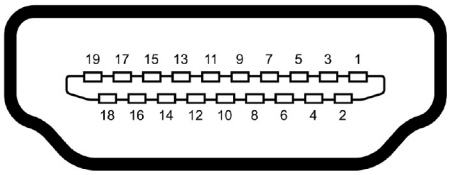


| Pin | Signal |
|---|---|
| 1 | TMDS Data2+ |
| 2 | TMDS Data2 Shield |
| 3 | TMDS Data2– |
| 4 | TMDS Data1+ |
| 5 | TMDS Data1 Shield |
| 6 | TMDS Data1– |
| 7 | TMDS Data0+ |
| 8 | TMDS Data0 Shield |
| 9 | TMDS Data0– |
| 10 | TMDS Clock+ |
| 11 | TMDS Clock Shield |
| 12 | TMDS Clock– |
| 13 | CEC |
| 14 | Reserved |
| 15 | SCL |
| 16 | SDA |
| 17 | Ground |
| 18 | +5 V (min. 0.055 A) |
| 19 | Hot Plug Detect |

# System—Left

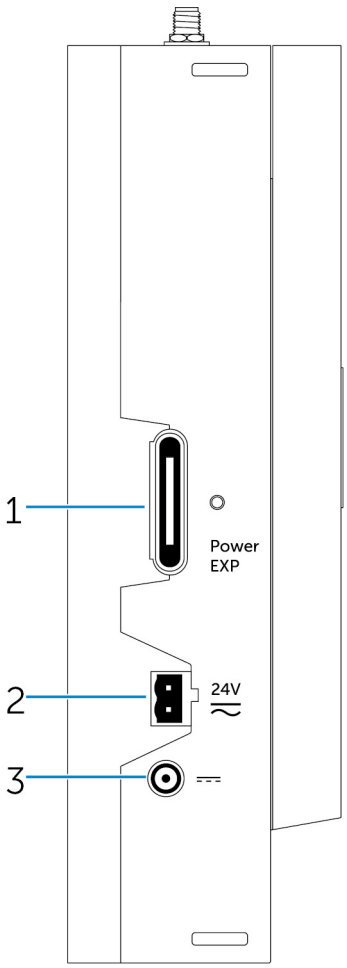


| Features | | |
|---|---|---|
| 1 | Power module expansion port | Connect an external power module for increased power options. |
| 2 | 24 V AC/DC power Phoenix connector | Connect an 24 V AC/DC power connector to provide power to your system. |
| 3 | 19.5 V DC power adapter port | Connect a 19.5 V DC power adapter connector to provide power to your system. |

## 24 V AC/DC power port

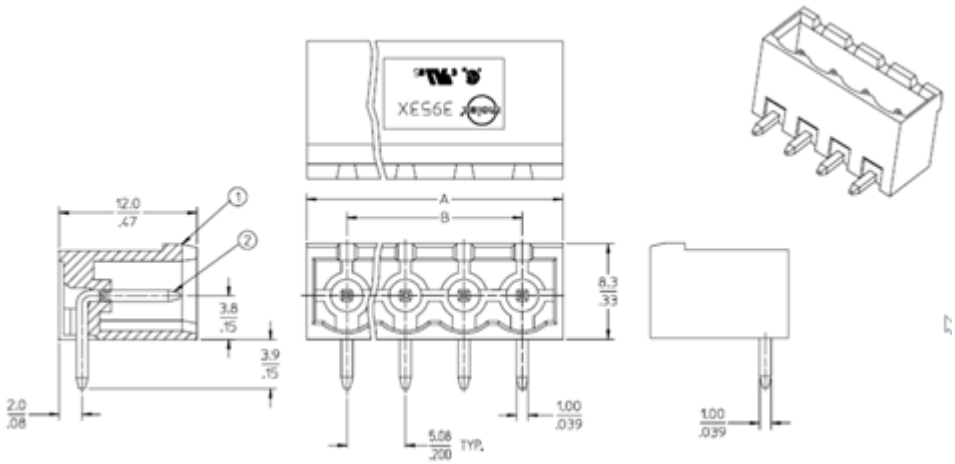


## 19.5 V DC power adapter port

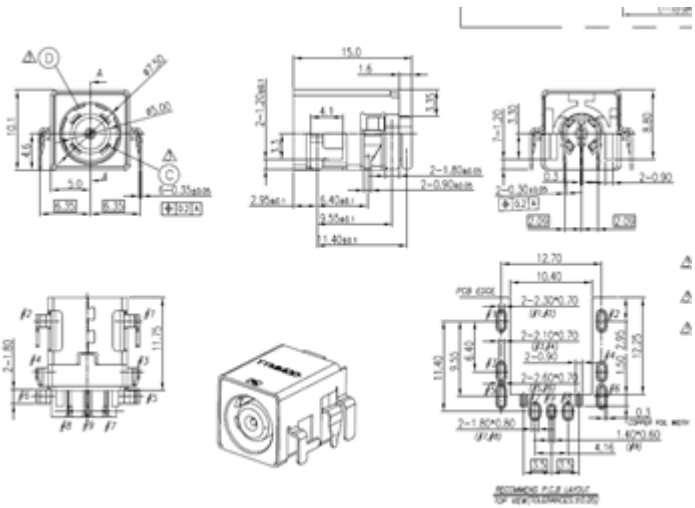

# System—Right

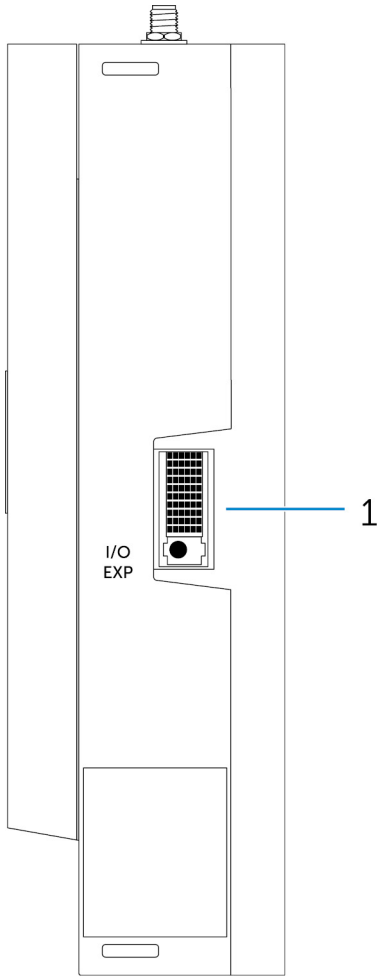


| Features | | |
|---|---|---|
| 1 | IO expansion port | Connect an external expansion module for additional IO ports. |

3

# Setting up your Dell Edge Gateway

**WARNING: Before you begin any of the procedures in this section, read the safety information that shipped with your system. For additional best practices information, go to www.dell.com/regulatory_compliance.**

**WARNING: When installing the Gateway, the responsible party or integrator shall use the AC Adapter provided with the Dell Edge Gateway, or connect to a 24Vac or 24Vdc power source already present as part of the clients installation.**

**WARNING: The Dell AC Adapter (full-wave rectified and have no built-in isolation transformer) is acceptable for use up to ambient temperature of 40°C and is a limited power source, SELV/Limited Energy Circuit, Class 2 power source. If ambient temperature of the installation exceeds 40 °C then use the 24Vac or 24Vdc power available as part of the installation.**

**WARNING: Always make sure that the available power source matches the required input power of the Dell Edge Gateway, check the input power markings next to power connector(s) before making connections. The 24 V power source must be compliant with local Electrical Codes and Regulations.**

**WARNING: To ensure the protection provided by Dell Edge Gateway is not impaired, do not use or install the system in any manner other than that which is specified in this manual.**

**WARNING: When installing the Gateway use acable appropriate for the load currents: 3-core cable rated 5 A at 90 °C (194 °F) minimum, which conform to either IEC 60227 or IEC 60245. The system accepts cables from 0.8 to 2.5 mm (18 to 14 AWG).**

**WARNING: The symbol indicates hot surface or adjacent hot surface that can obtain temperature during normal use that can cause a burn. Allow equipment to cool off or use protective gloves when handling to reduce risk of a burn.**

**WARNING: If a battery is included as part of System/Network, battery must be must be installed with appropriate enclosure in accordance with local Fire and Electrical Codes and Laws.**

**WARNING: When installing the Power Module, use a cable appropriate for the load currents: 3-core cable rated 15 A at 90 °C (194 °F) minimum, which conform to either IEC60227 or IEC 60245. The Gateway accepts cables of 14 AWG minimum.**

**WARNING: Before installing that all of three power inputs (Terminal Block/Power Jack/Battery Input) in power module shall be protected by the 20 A fuses or circuit-breakers(over current protection device) in front of this system.**

**WARNING: The system is for installation in a suitable industrial enclosure (provides electrical, mechanical and fire hazard protection).**

**WARNING: The core module only can be wall mounted (without the need for an additional enclosure)**

**WARNING: Only Sealed Lead Acid (SLA) battery rated 50Ah (or less) shall be used**

## Professional installation instructions

### Installation personnel

This product is designed for specific applications and needs to be installed by qualified personnel with RF and regulatory related knowledge. The general user shall not attempt to install or change the setting.

### Installation location

The product shall be installed at a location where the radiating antenna is kept 20 cm from nearby persons in its normal operation condition in order to meet regulatory RF exposure requirements.

**External antenna**

Use only the antenna(s) which have been approved by the applicant. Non-approved antenna(s) may produce unwanted spurious or excessive RF transmitting power which may lead to a violation of FCC/IC limits and is prohibited.

**Installation procedure**

Please refer to user's manual for the detail.

**WARNING: Please carefully select the installation position and make sure that the final output power does not exceed the limits set forth in relevant rules. The violation of these rules could possibly lead to serious federal penalties.**

# Instructions d'installation professionnelles

**Le personnel d'installation**

Ce produit est conçu pour des applications spécifiques et doit être installé par un personnel qualifié avec RF et connaissances connexes réglementaire. L'utilisateur ne doit pas tenter générale d'installer ou de modifier le réglage.

**Lieu d'installation**

Le produit doit être installé à un endroit où l'antenne de rayonnement est maintenue à 20 cm de personnes à proximité dans son état de fonctionnement normal, afin de répondre aux exigences réglementaires d'exposition aux radiofréquences.

**Antenne externe**

Utilisez uniquement l'antenne(s) qui ont été approuvés par le demandeur. Antenne (s) peuvent produire de l'énergie RF parasite indésirable ou excessive transmission qui peut conduire à une violation des normes de la FCC / IC est interdite et non-approuvé.

**Procédure d'installation**

**ATTENTION: S'il vous plaît choisir avec soin la position d'installation et assurez-vous que la puissance de sortie final ne dépasse pas les limites fixées dans les règles pertinentes. La violation de ces règles pourrait conduire à des sanctions fédérales graves.**

# Federal Communication Commission Interference Statement

This device complies with Part 15 of the FCC Rules. Operation is subject to the following two conditions: (1) This device may not cause harmful interference, and (2) this device must accept any interference received, including interference that may cause undesired operation.

This equipment has been tested and found to comply with the limits for a Class B digital device, pursuant to Part 15 of the FCC Rules. These limits are designed to provide reasonable protection against harmful interference in a residential installation. This equipment generates, uses and can radiate radio frequency energy and, if not installed and used in accordance with the instructions, may cause harmful interference to radio communications. However, there is no guarantee that interference will not occur in a particular installation. If this equipment does cause harmful interference to radio or television reception, which can be determined by turning the equipment off and on, the user is encouraged to try to correct the interference by one of the following measures:

- Reorient or relocate the receiving antenna.
- Increase the separation between the equipment and receiver.
- Connect the equipment into an outlet on a circuit different from that to which the receiver is connected.
- Consult the dealer or an experienced radio/TV technician for help.

**FCC Caution:**

- Any changes or modifications not expressly approved by the party responsible for compliance could void the user's authority to operate this equipment.

- This transmitter must not be co-located or operating in conjunction with any other antenna or transmitter.

Radiation Exposure Statement:

This equipment complies with FCC radiation exposure limits set forth for an uncontrolled environment. This equipment should be installed and operated with minimum distance 20cm between the radiator & your body.

**NOTE: The country code selection is for non-US model only and is not available to all US model. Per FCC regulation, all WiFi product marketed in US must fixed to US operation channels only.**

# Industry Canada Statement

This device complies with Industry Canada license-exempt RSS standard(s). Operation is subject to the following two conditions:

1. this device may not cause interference, and
2. this device must accept any interference, including interference that may cause undesired operation of the device.

Le présent appareil est conforme aux CNR d'Industrie Canada applicables aux appareils radio exempts de licence. L'exploitation est autorisée aux deux conditions suivantes:

1. l'appareil ne doit pas produire de brouillage, et
2. l'utilisateur de l'appareil doit accepter tout brouillage radioélectrique subi, même si le brouillage est susceptible d'en compromettre le fonctionnement.

This Class B digital apparatus complies with Canadian ICES-003.

Cet appareil numérique de la classe B est conforme à la norme NMB-003 du Canada.

This device complies with RSS-210 of Industry Canada. Operation is subject to the condition that this device does not cause harmful interference.

Cet appareil est conforme à la norme RSS-210 d'Industrie Canada. L'opération est soumise à la condition que cet appareil ne provoque aucune interférence nuisible.

This device and its antenna(s) must not be co-located or operating in conjunction with any other antenna or transmitter, except tested built-in radios.

Cet appareil et son antenne ne doivent pas être situés ou fonctionner en conjonction avec une autre antenne ou un autre émetteur, exception faites des radios intégrées qui ont été testées.

The County Code Selection feature is disabled for products marketed in the US/Canada.

La fonction de sélection de l'indicatif du pays est désactivée pour les produits commercialisés aux États-Unis et au Canada.

**Radiation Exposure Statement:** This equipment complies with IC radiation exposure limits set forth for an uncontrolled environment. This equipment should be installed and operated with minimum distance 20cm between the radiator & your body.

**Déclaration d'exposition aux radiations**: Cet équipement est conforme aux limites d'exposition aux rayonnements IC établies pour un environnement non contrôlé. Cet équipement doit être installé et utilisé avec un minimum de 20 cm de distance entre la source de rayonnement et votre corps.

**Caution:**

1. The device for operation in the band 5150-5250 MHz is only for indoor use to reduce the potential for harmful interference to co-channel mobile satellite systems;
2. The maximum antenna gain permitted for devices in the bands 5250-5350 MHz and 5470-5725 MHz shall comply with the eirp limit; and

3. The maximum antenna gain permitted for devices in the band 5725-5825 MHz shall comply with the eirp limits specified for point-to-point and non point-to-point operation as appropriate.
4. The worst-case tilt angle(s) necessary to remain compliant with the eirp elevation mask requirement set forth in Section 6.2.2(3) shall be clearly indicated.
5. Users should also be advised that high-power radars are allocated as primary users (i.e. priority users) of the bands 5250-5350 MHz and 5650-5850 MHz and that these radars could cause interference and/or damage to LE-LAN devices.

**Avertissement:**

1. Les dispositifs fonctionnant dans la bande 5150-5250 MHz sont réservés uniquement pour une utilisation à l'intérieur afin de réduire les risques de brouillage préjudiciable aux systèmes de satellites mobiles utilisant les mêmes canaux;
2. Le gain maximal d'antenne permis pour les dispositifs utilisant les bandes 5250-5350 MHz et 5470-5725 MHz doit se conformer à la limite de p.i.r.e.;
3. Le gain maximal d'antenne permis (pour les dispositifs utilisant la bande 5725-5825 MHz) doit se conformer à la limite de p.i.r.e. spécifiée pour l'exploitation point à point et non point à point, selon le cas.
4. Les pires angles d'inclinaison nécessaires pour rester conforme à l'exigence de la p.i.r.e. applicable au masque d'élévation, et énoncée à la section 6.2.2 3), doivent être clairement indiqués.
5. De plus, les utilisateurs devraient aussi être avisés que les utilisateurs de radars de haute puissance sont désignés utilisateurs principaux (c.-à-d., qu'ils ont la priorité) pour les bandes 5250-5350 MHz et 5650-5850 MHz et que ces radars pourraient causer du brouillage et/ou des dommages aux dispositifs LAN-EL.

# Setting up the Edge Gateway

## Powering on the Edge Gateway

1. Install the Edge Gateway on the wall mount using a wall mounting kit.

   or

   Install the Edge Gateway on the rack infrastructure using DIN-rail mounting brackets.
2. Connect a network cable—optional.

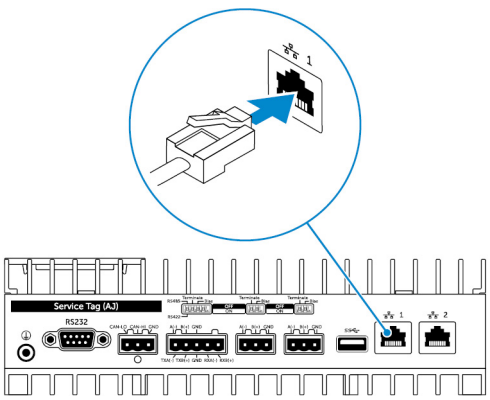


3. Install the WLAN antenna to enable the wireless connections—optional.

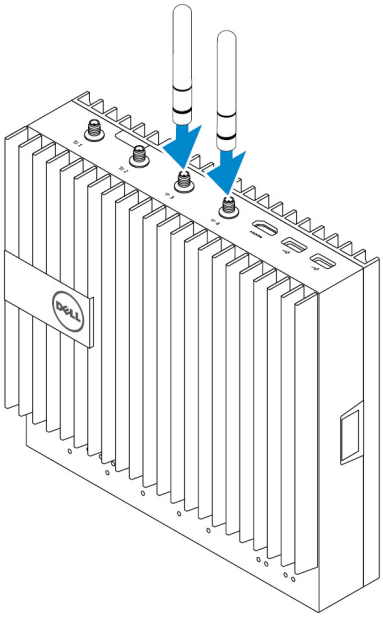

4. Install the WWAN antenna to enable the wireless connections—optional.

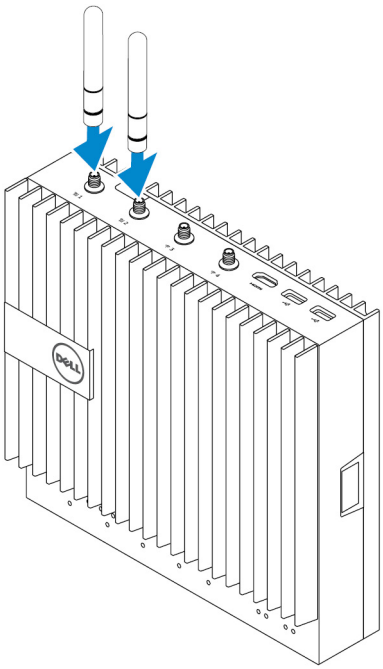

5. Connect a display to the Edge Gateway (if necessary).

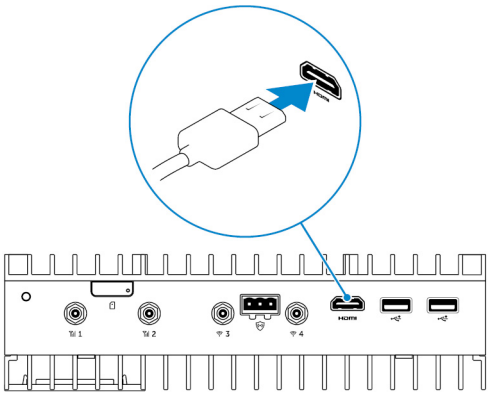

6. Connect a keyboard and mouse if accessing the Edge Gateway directly.

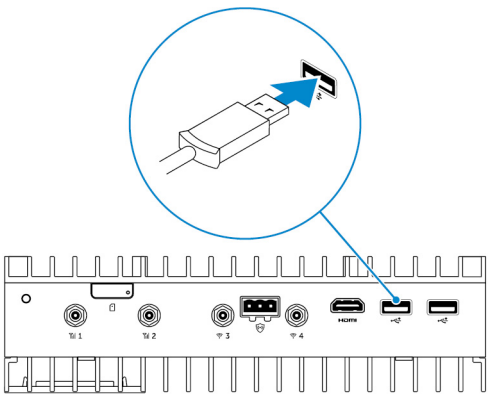

7. Connect a grounding cable to the Gateway (if necessary).
8. Connect a SELV/limited energy circuit power source to the Edge Gateway and press the power button to turn it on.

**24 V AC/DC**

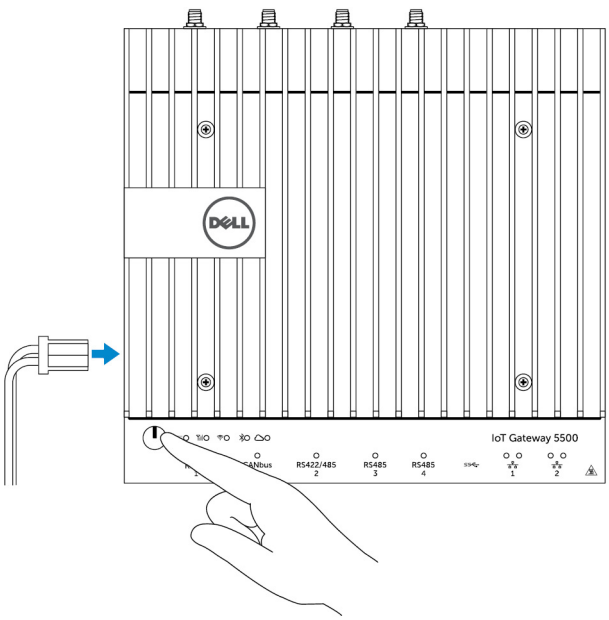


or

**19.5 V DC**

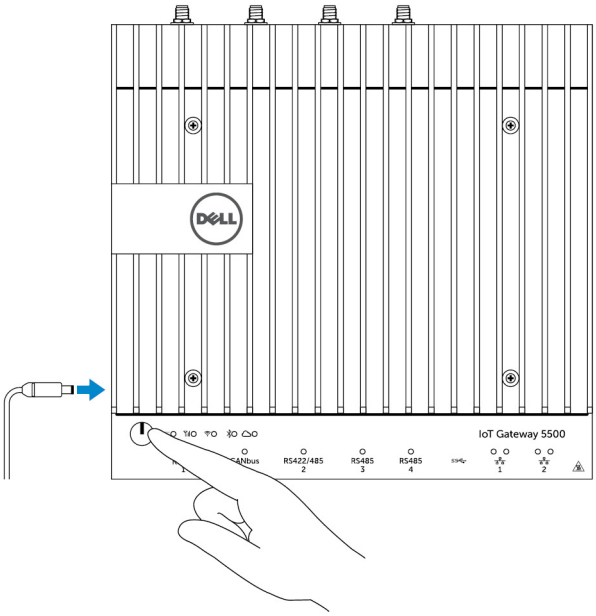


9. If setting up the Edge Gateway for the first time, complete the operating system setup.

   **NOTE: The Edge Gateway is shipped with either Windows 10 Enterprise, Ubuntu Snappy, or Wind River Linux operating systems.**

   **NOTE: On Windows 10 OS, select *Do this later* when prompted to enter the product key.**

   **NOTE: The default username and password for Ubuntu-Snappy-Core is *ubuntu*.**

   **NOTE: The default username and password for Wind River is *root*.**

10. Connect and configure devices using the RS422/RS485 ports.

    **NOTE: Turn on the corresponding dip switches to enable the RS422/R485 ports.**

    **NOTE: After the Edge Gateway setup is complete, reinstall the dust covers on any unused ports.**

## Mounting the Edge Gateway on the wall

You can mount the Edge Gateway on a wall by using mounting brackets.

1. Secure the two mounting brackets to the back of the Edge Gateway by using four screws.

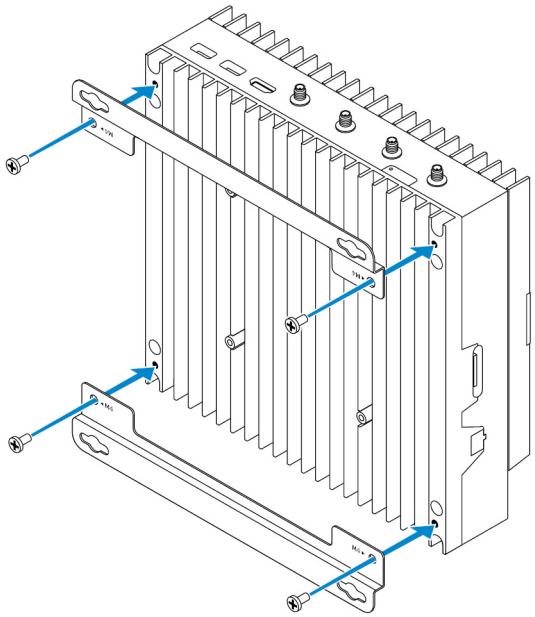

2. Drill four holes in the wall that correspond to the holes in the mounting bracket, then place the Edge Gateway against the wall and align the holes in the mounting brackets with the holes in the wall.

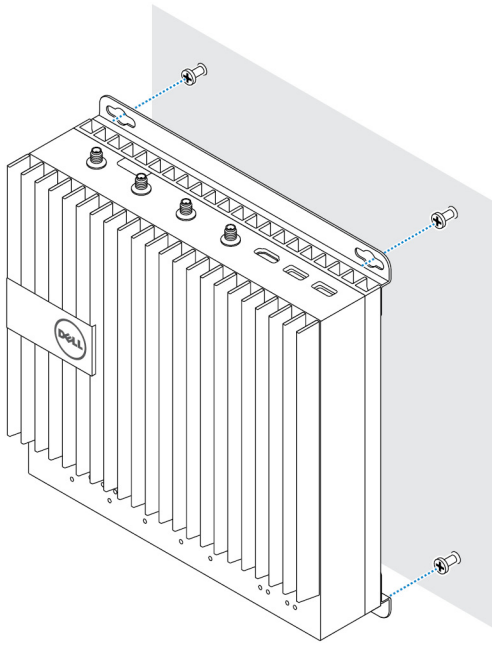

3. Tighten the screws to secure the Edge Gateway to the wall.

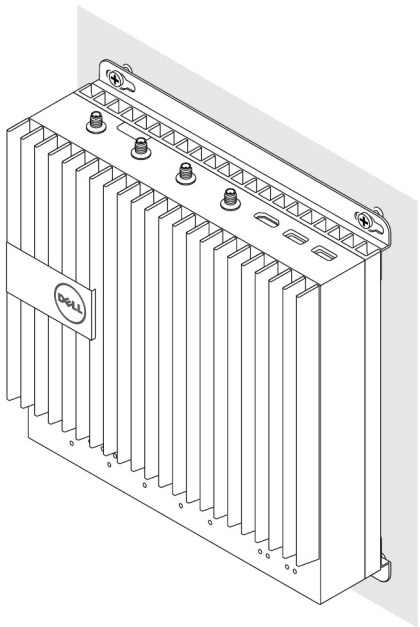

## Mounting the Edge Gateway on a DIN rail

The Edge Gateway can be mounted on a DIN rail. The DIN rail bracket mounts to the back of the Edge Gateway.

1. Align the screw holes on the DIN rail mount to the back of the Edge Gateway, place the screws on the DIN rail mount and secure it to the Edge Gateway.

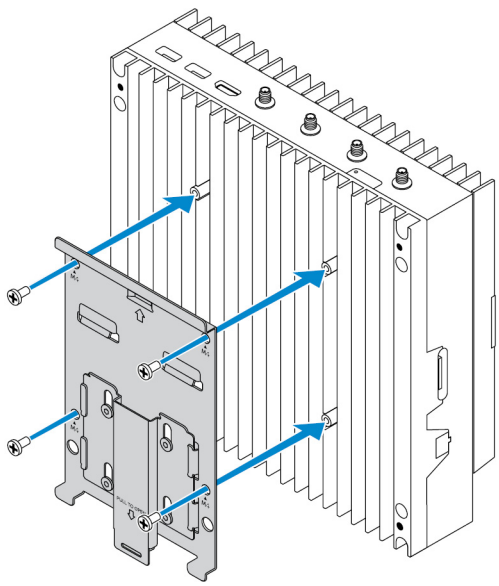

2. Pull down on the tab to release the latch on the DIN rail mount.

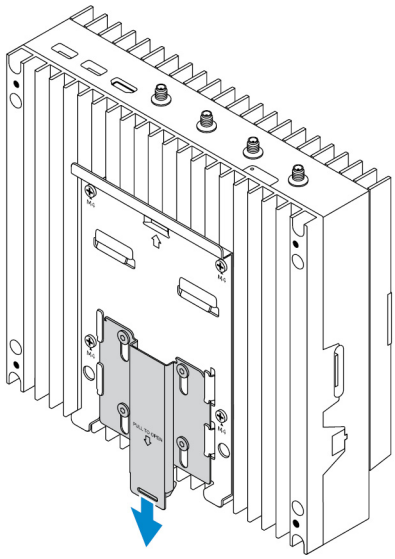

3. Mount the Edge Gateway on a DIN rail.

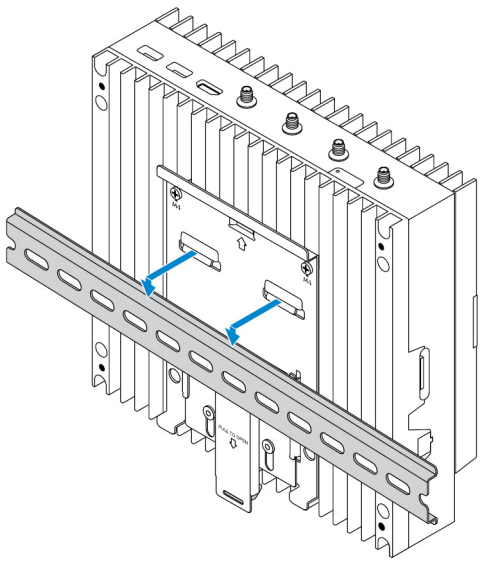

4. Secure the Edge Gateway to the DIN rail by pressing the latch.

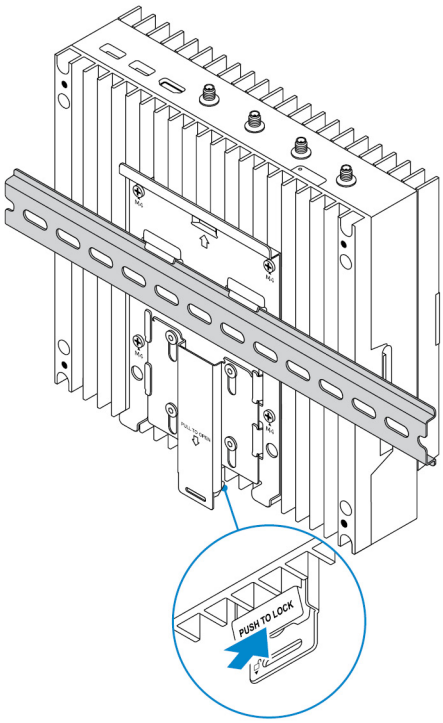


## Inserting a micro-SIM card and activating your mobile broadband

**CAUTION: Dell recommends that you insert the micro-SIM card before powering on the Edge Gateway.**

1. Shut down your Edge Gateway.
2. Locate the micro-SIM card slot.
3. Use a paper clip or SIM eject tool to eject the micro-SIM card tray.
4. Place the micro-SIM card on the tray.

   **CAUTION: Ensure that the micro-SIM card is aligned as shown in the image.**

5. Close the micro-SIM card tray.

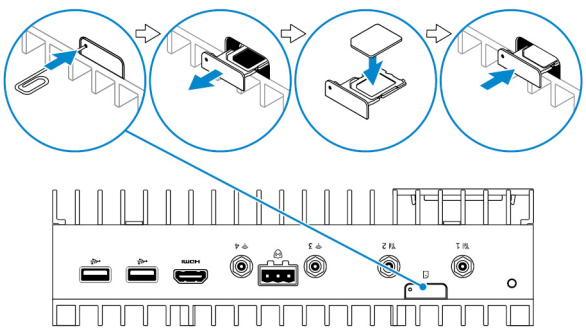

6. Turn on your Edge Gateway.
7. Connect to a mobile network.

   **Windows operating system**

   *If the Edge Gateway is shipped with HSPA+ (DW5580) WWAN card:*

   a. Launch the **Telit Mobile Broadband Manager**.

b. Click the play button to connect to your HSPA+ network.

**NOTE: Click the information button to view the International Mobile Equipment Identity (IMEI) and Integrated Circuit Card Identifier (ICCID) information.**

Click the stop to disconnect from your HSPA+ network.

*If the Edge Gateway is shipped with LTE Verizon (DW5812) WWAN or LTE AT&T (DW5813) card:*

a. Select the network icon from the taskbar and then click **Cellular**.
b. Select your **Mobile Broadband Carrier** → **Advanced Options**.
c. Make a note of the International Mobile Equipment Identity (IMEI) and the Integrated Circuit Card Identifier (ICCID).

**Ubuntu operating system**

a. Open the **Terminal** window.
b. Go to super user mode by entering:`$sudo su -`
c. Configure the Mobile Broadband connection profile:

```
#nmcli con add type gsm ifname ttyACM3 con-name <connection name> apn <apn> user
<user name> password <password>
```

d. Connect to the mobile network: `#nmcli con up` *connection name*

**NOTE: To view the IMEI and ICCID number use the `mmcli -m 0 --command=+CIMI` command.**

To disconnect from the mobile network: `#nmcli con down`*connection name*.

**Wind River operating system**

*If the Edge Gateway is shipped with HSPA+ (DW5580) WWAN card:*

a. Open the **Terminal** window.
b. Configure the Mobile Broadband APN profile:

```
#uci set network.wwan.apn="<apn>"
#uci commit network
```

c. Connect to the mobile network: `#ifup wwan`

**NOTE: To view the IMEI and ICCID number use the `AT+IMEISV` command.**

To disconnect from the mobile network: `#ifdown wwan`.

*If the Edge Gateway is shipped with LTE Verizon (DW5812) WWAN card:*

Open the **Terminal** window.

a. In the terminal type `AT+IMEISV` to open the Minicom terminal.

   The Minicom terminal opens with the following text:

```
Welcome to minicom 2.7
OPTIONS: I18n
Compiled on Dec 17 2015, 16:20:45.
Port /dev/ttyACM0, 21:33:05
Press CTRL-A Z for help on special keys
```

b. Type the AT+cgdcont command with *PDP Context Identifier*, "*Packet Data Protocol type*", and "*Access Point Name*" parameters and press Enter.

Example: `at+cgdcont=3,"IPV4V6","vzwinternet"`.

**NOTE: If the command runs successfully, the message `OK` appears.**

c. Configure the Network Control Mode with the `at#ncm` command.

   Example: `at#ncm=1,3`.

d. Activate the Packet Data Protocol with the `at+cgact` command.

   Example: `at+cgact=1,3`.

e. To view the PDP Context Read Dynamic Parameters, that is, *bearer_id*, *apn*, *ip_addr*, *subnet_mask*, *gw_addr*, *DNS_prim_addr*, *DNS_sec_addr*, *P-CSCF_prim_addr*, and *P-CSCF_sec_addr* parameters, run the `at+cgcontrdp` command.

   Example: `at+cgcontrdp=3`

```
+CGCONTRDP: 3,7,"vzwinternet.mnc480.mcc311.gprs","100.106.47.7.255.0.0.0","100.1
06.47.8","198.224.157.135","0.0.0.0","0.0.0.0","0.0.00"
```

f. Exit the Minicom module.

g. In the Linux terminal configure the connection with the following commands

```
root@WR-IntelligentDevice:~# ifconfig wwan0 ip_addr netmask subnet_mask up
root@WR-IntelligentDevice:~# route add default gw gw_addr wwan0
root@WR-IntelligentDevice:~# echo nameserver DNS_prim_addr >>/etc/resolv.conf
```

   Example:

```
root@WR-IntelligentDevice:~# ifconfig wwan0 100.106.47.7 netmask 255.0.0.0 up
root@WR-IntelligentDevice:~# route add default gw 100.106.47.8 wwan0
root@WR-IntelligentDevice:~# echo nameserver 198.224.157.135 >>/etc/resolv.conf
```

h. Log in to the Minicom module using the `minicom -D /dev/ttyACM0` command.

i. Connect to the mobile network using the `at+cgdata` command.

   Example:`at+cgdata="M-RAW_IP",3`

**NOTE: To view the IMEI and ICCID number use the `AT+IMEISV` command.**

To disconnect from the mobile network

a. Open the Minicom terminal.
b. Enter the `at+cgdata="M-RAW_IP",3` command.
c. Close the Minicom terminal.
d. Enter the `root@WR-IntelligentDevice:~# ifconfig wwan0 down` command.

*If the Edge Gateway is shipped with LTE AT&T (DW5813) WWAN card:*

a. Open the **Terminal** window.
b. In the terminal type `minicom -D /dev/ttyACM0` to open the Minicom terminal.

   The Minicom terminal opens with the following text:

```
Welcome to minicom 2.7
OPTIONS: I18n
Compiled on Dec 17 2015, 16:20:45.
Port /dev/ttyACM0, 21:33:05
Press CTRL-A Z for help on special keys
```

c. Type the AT+cgdcont command with *PDP Context Identifier*, "*Packet Data Protocol type*", and "*Access Point Name*" parameters and press Enter.

Example: `at+cgdcont=3,"IPV4V6","broadband"`.

**NOTE: If the command runs successfully, the message `OK` appears.**

d. Configure the Network Control Mode with the `at#ncm` command.

   Example: `at#ncm=1,3`.

e. Activate the Packet Data Protocol with the `at+cgact` command.

   Example: `at+cgact=1,3`.

f. To view the PDP Context Read Dynamic Parameters, that is, *bearer_id*, *apn*, *ip_addr*, *subnet_mask*, *gw_addr*, *DNS_prim_addr*, *DNS_sec_addr*, *P-CSCF_prim_addr*, and *P-CSCF_sec_addr* parameters, run the `at+cgcontrdp` command.

   Example: `at+cgcontrdp=3`

```
+CGCONTRDP: 3,7,"broadband.mnc480.mcc311.gprs","100.106.47.7.255.0.0.0","100.1
06.47.8","198.224.157.135","0.0.0.0","0.0.0.0","0.0.00"
```

g. Exit the Minicom module.

h. In the Linux terminal configure the connection with the following commands

```
root@WR-IntelligentDevice:~# ifconfig wwan0 ip_addr netmask subnet_mask up
root@WR-IntelligentDevice:~# route add default gw gw_addr wwan0
root@WR-IntelligentDevice:~# echo nameserver DNS_prim_addr >>/etc/resolv.conf
```

   Example:

```
root@WR-IntelligentDevice:~# ifconfig wwan0 100.106.47.7 netmask 255.0.0.0 up
root@WR-IntelligentDevice:~# route add default gw 100.106.47.8 wwan0
root@WR-IntelligentDevice:~# echo nameserver 198.224.157.135 >>/etc/resolv.conf
```

i. Log in to the Minicom module using the `minicom -D /dev/ttyACM0` command.

j. Connect to the mobile network using the `at+cgdata` command.

   Example:`at+cgdata="M-RAW_IP",3`

To disconnect from the mobile network

a. Open the Minicom terminal.
b. Enter the `at+cgdata="M-RAW_IP",3` command.
c. Close the Minicom terminal.
d. Enter the `root@WR-IntelligentDevice:~# ifconfig wwan0 down` command.

## Replacing the micro-SIM card

**CAUTION: Removing the micro-SIM card while it is in use may cause data loss or result in application errors.**

1. Using a paper clip or SIM eject tool, eject the micro-SIM card tray.
2. Remove the micro-SIM card from the micro-SIM card tray.
3. Replace the micro-SIM card tray into the Gateway.

4

# Setting up your operating system

**CAUTION: To prevent operating system corruption from sudden power loss, use the operating system to gracefully shut down the Edge Gateway.**

## Windows 10 LTSB 2015

### Overview

The Edge Gateway is shipped with Windows 10 IoT Enterprise LTSB 2015. For more information on Windows 10 operating system, see https://support.microsoft.com/en-us.

### Boot up and login

1. Connect a keyboard, mouse, and monitor to the Edge Gateway.
2. Power on the Edge Gateway.
   The system boots into Windows 10 IoT Enterprise LTSB 2015.
3. Select your regional settings.

   **NOTE: If prompted for a product key, and one is already entered, select Do this later.**
4. Read and **Agree** the End User License Agreement.
5. Connect to an available wireless or wired network.
6. Create a user account.

### Restoring Windows 10 IoT Enterprise LTSB 2015

You can restore Windows 10 IoT Enterprise LTSB 2015 on the Edge Gateway using the recovery Operating System image on the boot partition which resets the run-time image back to the factory image.

1. Connect a keyboard, mouse, and monitor to the Edge Gateway.
2. Power on the Edge Gateway and boot to the operating system's desktop.
3. Click the start icon, hold the Shift key and click **Restart**.
4. Select **Troubleshoot**.
5. Select **Reset this PC**.
6. Select **Remove everything**.
7. Select **Fully clean the drive**.
8. Select **Reset**.

### Windows 10 IOT Enterprise LTSB 2015 basic functions

#### BIOS Update

BIOS updates for the Edge Gateway may be downloaded from https://www.dell.com/support. The download will include an executable that may be ran from the local machine.

### Watchdog Timer

The Watchdog Timer for Windows 10 IoT Enterprise LTSB 2015 is controlled via the BIOS setting. Enter the BIOS during boot by pressing F2. The Watchdog Timer is enabled and disabled under the BIOS setting **Watchdog Timer**.

### TPM Support

Windows 10 IoT Enterprise LTSB 2015 supports TPM 2.0. Access the following link for TPM resources: https://technet.microsoft.com/en-us/library/cc749022(v=ws.10).aspx

### System Shutdown and Restart

Click the Start Icon and then press **Power** then **Restart** or **Shutdown** the Edge Gateway.

### LAN/WLAN Network configuration

Click the Start Icon and then type **Settings** and open the **Settings** window. Select **Network & Internet** from the settings menu.

### Bluetooth configuration

Click the Start Icon and then type **Settings** and open the **Settings** window. Select **Devices** from the settings menu and then select **Bluetooth** from the menu on the left panel.

### LE910 Network configuration

Follow the Service Manual to install and configure the WWAN module and the corresponding carrier SIM card for the system. After the WWAN module and the SIM cards are installed:

1. Click the Start Icon and then type **Settings** and open the **Settings** window.
2. Select **Network & Internet** from the Settings Menu.
3. Locate the WWAN connection in the Wi-Fi section and select the entry to connect and disconnect from the WWAN adapter.

### HE910 Network configuration

Follow the Service Manual to install and configure the WWAN module and the corresponding carrier SIM card for the system. After the WWAN module and the SIM cards are installed:

1. Click the Start Icon and then type **Settings** and open the **Settings** window.
2. Select **Network & Internet** from the Settings Menu.
3. Locate the WWAN connection in the Wi-Fi section and select the entry to connect and disconnect from the WWAN adapter.

## Common port mappings

### Serial Port Mapping

The table show the serial port mapping on the Edge Gateway 5000/5100 with factory installed Windows 10 IoT Enterprise LTSB 2015. For dip switch setting on the Edge Gateway for RS422 and RS485 ports, see DIP Switches.

| No. | Port Type | Connector | Device Node |
|---|---|---|---|
| 1 | RS232 | DB9 | COM1 |
| 2 | RS422_485 | 5 pin terminal | COM2 |
| 3 | RS485 | 3 pin terminal | COM3 |
| 4 | RS485 | 3 pin terminal | COM4 |

### Edge Gateway I/O Module GPIO Mapping

The GPIOs on the external I/O Module for the Edge Gateway are behind PIC microcontroller. The PIC microcontroller is exposed to the host system and to the host OS as a USB-HID device. Software applications developed to communicate with the GPIOs may use the protocol defined in the following set of references to communicate with the GPIO modules.

### Edge Gateway I/O Module PCIe expansion mapping

The PCIe slot on the external I/O module for the Edge Gateway are driven directly from the host PCIe bus. Since it is generic PCIe expansion there are no PCIe device specific drivers integrated into the Windows 10 IoT Enterprise LTSB 2015 OS image. If there are specific PCIe card used on this slot, contact the vendor of that PCIe card to verify if they have Windows 10 IoT Enterprise LTSB 2015 drivers.

# Snappy Ubuntu Core 15 and 16

## Overview

Ubuntu Snappy Core is a Linux OS distribution that is an entirely new mechanism for managing a system and its applications.

The Edge Gateway supports the following list of Ubuntu Snappy Linux OS distribution:

- Ubuntu Core 15
- Ubuntu Core 16

For more information on Ubuntu Snappy Core OS, see

- www.ubuntu.com/cloud/snappy
- www.ubuntu.com/desktop/snappy
- www.ubuntu.com/internetofthings

### Pre-requisites

#### *Infrastructure*

An active connection to the internet is needed to update the Ubuntu Snappy Core operating system as well as applications (snaps)

#### *Prior knowledge*

- Familiarity with Unix\Linux commands
- Knowledge of how to use the serial communication protocol
- Knowledge of how to use a terminal emulator (for example; PuTTY)
- Knowledge of your network settings (proxy URL, ports, name servers, and so on)

## Boot up and log in

**NOTE: The Ubuntu Snappy Core operating system has no graphical user interface**

Turn on the Edge Gateway and when prompted log in to the OS using the default credentials. The default username and password for Ubuntu Snappy Core is *ubuntu*.

**NOTE: The username and password are both lowercase**

For example (Ubuntu 15);

```
Ubuntu 15.04 localhost.localdomain tty1

localhost login: ubuntu
Password:
```

Press Enter, the following text is displayed:

```
Ubuntu 15.04 localhost.localdomain tty1

localhost login: ubuntu
Password
Last login: Mon Nov 2 16:47:43 UTC 2015 on tty1
Welcome to snappy Ubuntu Core, a transactionally updated Ubuntu

* See http://ubuntu.com/snappy

It's a brave new world her in snappy Ubuntu Core! This machine
does not use apt-get or deb packages. Please see 'snappy -help'
for app installation and transactional updates

(plano)ubuntu@localhost:~$
```

For example (Ubuntu 16);

```
Ubuntu 16 on 127.0.0.1 (tty1)

localhost login: ubuntu
Password:
```

## Restoring Ubuntu Snappy

**CAUTION: Following the steps deletes all the data on your system.**

The following steps refer to different methods through which the Ubuntu Snappy Core operating system can be restored to the factory image.

### External Storage

On supported platforms, you can download the factory image from www.dell.com to restore your Edge Gateway by external media kit. For more information, see http://www.dell.com/support/article/us/en/19/SLN301761.

### Factory OS recovery image

You can restore Ubuntu Snappy Core on the Edge Gateway using the recovery OS image on the boot partition. Reset the system back to the factory image if you encounter any of the following situations:

- You are unable to start the operating system
- The operating system is damaged.

Connect a keyboard, mouse, and monitor to the Edge Gateway, or connect to the Edge Gateway through a KVM session.

1. Turn on the system.
2. Press F12 when the Dell logo is displayed on the screen to enter the boot menu.
3. Select `Factory Restore` from the boot menu.

   **CAUTION: Following the step deletes all the data on your system.**

4. Press `Y` when prompted `Factory Restore will delete all user data, are you sure? [Y/N].`

   System restore starts and reinstalls the OS on your Edge Gateway.

## Updating operating system and applications

After enabling the network connections, and connecting to the internet, it is a recommended to have the latest OS components and applications installed. To update Ubuntu Snappy, run the `(plano)ubuntu@localhost:~$ sudo snappy update` command.

### Viewing operating system and application versions

Running command,

```
(plano)ubuntu@localhost:~$ sudo uname -a
```

returns

```
Linux ubuntu.localdomain 3.19.0-47-generic #53-Ubuntu SMP Mon Jan 18 14:02:48 UTC 2016
x86_64 x86_64 x86_64 GNU/Linux
```

Running command,

```
(plano)ubuntu@localhost:~$ sudo snappy info
```

returns

```
Linux power5000.localdomain 3.19.0-47-generic #53-Ubuntu SMP Mon Jan 18 14:02:48 UTC 2016
x86_64 x86_64 x86_64 GNU/Linux
```

Running command,

```
(plano)ubuntu@localhost:~$ snappy list -v
```

returns

```
Name                                    Date                    Version        Developer
ubuntu-core                       2015-10-13      7                 ubuntu
bluez                                   2015-10-20        5.34-2        canonical*
network-namager                 2015-10-20        0.2               canonical*
plano-uefi-fw-tools         2015-10-20        0.5               canonical*
webdm                                   2015-10-20        0.9.2            canonical*
plano-webdm                       2015-10-20        1.7                canonical*
```

**NOTE: Check if a newer version of the software is available. For more information on checking for updates, see Updating operating system and applications.**

## Ubuntu core OS basic function

### Basic Commands

**NOTE: For more information about Ubuntu commands, see Snapcraft.io/.**

**Table 1. Basic commands**

| Action | Ubuntu Core 15 | Ubuntu Core 16 |
|---|---|---|
| Viewing system attributes | `#sudo snappy info` | `#sudo snap version` |
| Updating the image to the latest Release | `#sudo snappy update` | `#sudo snap update` |
| Viewing a list of all the snaps that are currently installed snaps | `#sudo snappy search` | `#sudo snap find` |
| Viewing a list of service commands that are available | `#sudo snappy service help` | N/A |
| Viewing a set an attribute to a snap | N/A | `#sudo snap set <snap> <attribute>=<value>` |
| Querying attributes from a snap | N/A | `#sudo snap get <snap>` |
| Rebooting the system | `#sudo reboot` | `#sudo reboot` |
| Shutting down the system | `#sudo poweroff` | `#sudo poweroff` |
| Add a new user if **libnss-extrausers** is pre-installed | `$sudo adduser --extrausers testuser` | `$sudo adduser --extrausers testuser` |
| Change a user's password | `$sudo passwd <user-name>` | `$sudo passwd <user-name>` |
| Disable or remove cloud-init service | `$sudo mount -o remount,rw /`<br>`$sudo /usr/bin/apt-get` | N/A |

| Action | Ubuntu Core 15 | Ubuntu Core 16 |
|---|---|---|
| | `remove cloud-init` | |
| Adjust grub configuration | `$sudo mount -o remount,rw /`<br>`$sudo vi /boot/grub/grub.cfg` | N/A |
| Remount Ubuntu Snappy 16 root file system as read/write | N/A | `Snappy 16 rootfs is Read-Only` |

## UEFI capsule update

**NOTE: For more information about fwupd commands, see http://www.fwupd.org/users.**

This fwupgmgr tool/commands are used to update UEFI BIOS firmware on the system.

The UEFI BIOS for this platform will be released through online Linux Vendor File System based methods. Capsule update will be recommended to be default enabled, running in the background to get system firmware up to date.

## Watchdog Timer

**NOTE: For more information about Watchdog Timer commands, see http://www.sat.dundee.ac.uk/~psc/watchdog/Linux-Watchdog.html.**

WDT is recommended to be default enabled to active the fail-safe circuitry, Snappy is a Watchdog Timer compatible OS provides capability to detect and recover system from malfunctions, the design reacts by itself when system hangs unexpected crash.

## Trusted Platform Module

**NOTE: For more information about Trusted Platform Module, see http://www.sat.dundee.ac.uk/~psc/watchdog/Linux-Watchdog.html.**

WDT is recommended to be default enabled to active the fail-safe circuitry, Snappy is a Watchdog Timer compatible OS provides capability to detect and recover system from malfunctions, the design reacts by itself when system hangs unexpected crash.

## Snappy Auto update

**NOTE: For more information about Snappy Auto update, see https://developer.ubuntu.com/en/snappy/guides/autoupdate/.**

Snappy Autoupdate is a feature running in the background that will guarantee your software always up to date. It's recommended to be enabled by default, the settings can be adjusted in the Ubuntu core.

## Cloud LED On/Off

This feature is supported on Edge Gateway 5000/5100 with Cloud status light.

1. Export Cloud LED PIN.

   ```
   #sudo su -
   #echo 346 > /sys/class/gpio/export
   #echo out > /sys/class/gpio/gpio346/direction
   ```

2. Turn on Cloud LED:

   ```
   #echo 1 > /sys/class/gpio/gpio346/value
   ```

   or

   Turn off Cloud LED:

```
#echo 0 > /sys/class/gpio/gpio346/value
```

## Serial Port

Serial device nodes mapping.

**Table 2. Serial device nodes mapping table.**

| Port Type | Connector | Device Node |
|---|---|---|
| RS232 | DB9 | `/dev/ttyS6` |
| RS422_485 | 5 pin terminal | `/dev/ttyS4` |
| RS485 | 3 pin terminal | `/dev/ttyS5` |
| RS485 | 3 pin terminal | `/dev/ttyS2` |

Execute the `#sudo chmod 777 /dev/ttyS#` command on two systems, where # is port number corresponding to ports being used.

- On system A, execute the `#cat < /dev/ttyS#` command, this will put system A waiting for transmission.
- On system b, execute the `#echo "test" > /dev/ttyS#` command, this will let system B send out transmission.

## Expansion IO Module

### PCIe

The PCIe slot on the external IO Module for the Edge Gateway is driven directly from the host PCIe bus. Since it is generic PCIe expansion, there are no PCIe device-specific drivers integrated into the OS image. If there is specific PCIe card used on this slot, contact the Vendor of that PCIe card for drivers.

### GPIO

The GPIOs on the external IO Module for the Edge Gateway are behind PIC microcontroller. The PIC microcontroller is exposed to the host system and to the host OS as a USB-HID device. Software application developed to communicate with the GPIOs may use the protocol defined in following set of references to communicate with the GPIO modules. There is no native application software available on the factory OS image that communicates with the IO Module GPIOs.

## Zigbee

**NOTE: This feature is only supported if hardware module presented.**

The OS provides the capability of mutual communication between user space application and physical module. If there is a specific Zigbee programming requirement of user mode application, contact the hardware provider of that module for API Documentation.

## Controller Area Network

**NOTE: This feature is only supported if hardware module presented.**

The OS provides the capability of mutual communication between user space application and physical module. If there is a specific Controller Area Network (CAN) bus programming requirement of user mode application, contact the hardware provider of that module for API documentation.

To find the device bus iver dmesg (if hardware is presented):

- `#dmesg | grep -i microchip`
- `for i in /sys/class/hidraw/*; do udevadm info $i --attribute-walk | grep -q 'CANBus HID Device' && echo path: /dev/$(basename $i); done`

## Network Manager – Ubuntu Core 15

Network-Manager is a native Ubuntu Snappy Connection Manger, the application handles multiple network devices, provides detection and configuration for system to automatically connect to network.

A command line utility **nmcli** is included with Network-Manager to support non-graphical user interface.

### WWAN (nmcli example)

- Configure the Mobile Broadband connection profile — `#nmcli con add type gsm ifname ttyACM3 con-name <connection name> apn <apn> user <user name> password <password>`
- Connect to the mobile network — `#nmcli con up <connection name>`

### WLAN (nmcli example)

- Configure the system to connect to unencrypted Wi–Fi network —

```
#nmcli dev wifi connect $SSID ifname $WIFI_INTERFACE
#iw dev $WIFI_INTERFACE link
#nmcli dev disconnect $WIFI_INTERFACE
```

- Configure the system to connect to WPA-encrypted Wi–Fi network —

```
#nmcli dev wifi connect $SSID password $PSK ifname $WIFI_INTERFACE
#iw dev $WIFI_INTERFACE link
#nmcli dev disconnect $WIFI_INTERFACE
```

### Software enabled Access Point (SoftAP)

This feature depends on the wireless module and it's associated driver to act as a wireless access point.

1. Login to Ubuntu Snappy, make sure the system is connected to internet.
2. Run the `#sudo snappy seach softap` command to find the application from the Ubuntu Snappy Store
3. Run the `#sudo snappy install sw-access-point` command to install the application.

   After the snap is installed, the service should be running as default configuration below:

```
SSID: Ubuntu
Open-authentication
802.11n 2.4GHz (G mode)
IP Address: 10.0.60.1
DHCP Range: 10.0.60.3-20
DNS server: 10.0.60.1
Gateway: 10.0.60.1
```

### Bluetooth

To connect to a Bluetooth device like a Bluetooth keyboard:

1. Run the `#bluetoothctl -a` command to start **bluetoothctl** console.

   The bluetoothctl console is opened.
2. Run the `$power on` command to power on the Bluetooth device.
3. Register the agent for keyboard:

```
$agent KeyboardOnly
$default-agent
```

4. Run the `$pairable on` command to put the Bluetooth controller in pair-able mode.
5. Run the `$scan on` command to scan nearby Bluetooth device.
6. Run the `$scan off` command to stop scanning after Bluetooth keyboard is found.
7. Run the `$pair <MAC address of bluetooth keyboard>` command to pair the Bluetooth keyboard.
8. Enter PIN Code on Bluetooth keyboard if needed.
9. Run the `$trust <MAC address of bluetooth keyboard>` command to turst the Bluetooth keyboard.
10. Run the `$connect <MAC address of bluetooth keyboard>` command to connect the to the Bluetooth keyboard.

11. Run the `$quit` command to quit the **bluetoothctl** console.

## Network Manager – Ubuntu Core 16

Network-Manager is a native Ubuntu Snappy Connection Manger, the application handles multiple network devices, provides detection and configuration for system to automatically connect to network.

A command line utility **nmcli** is included with Network-Manager to support non-graphical user interface.

### WWAN (nmcli example)

- Configure the Mobile Broadband connection profile — `network-manager.nmcli con add type gsm ifname ttyACM3 con-name <connection name> apn <apn> user <user name> password <password>`
- Connect to the mobile network — `# network-manager.nmcli con up <connection name>`

### WLAN (nmcli example)

- Run the `$ network-manager.nmcli d` to show a list of network interfaces like **eth0**, **eth1**, **wlan0**, **mlan0**, and so on
- Run the `$ network-manager.nmcli device wifi list` to list the available wireless Access Points.
- Wireless connection with `nmcli`: Run the following commands and replace `$SSID`, `$PSK`, and `$WIFI_INTERFACE` of your environment.
  - Connect: `$ sudo network-manager.nmcli dev wifi connect $SSID password $PSK ifname $WIFI_INTERFACE`
  - Disconnect: `$ sudo network-manager.nmcli dev disconnect $WIFI_INTERFACE`

### Software enabled Access Point (SoftAP)

This feature depends on the wireless module and it's associated driver to act as a wireless access point.

1. Login to Ubuntu Snappy, make sure the system is connected to internet.
2. Run the `#sudo snap seach wifi-ap` command to find the application from the Ubuntu Snappy Store
3. Run the `#sudo snap install wifi-ap` command to install the application.
4. After snap is installed, run the `$ sudo wifi-ap.config set wifi.interface mlan0` to set the network interface being used to operate the access point on.
5. Enable the access point and restart the service:

   ```
   $ sudo /snap/bin/wifi-ap.config set disabled 0
   $ sudo systemctl start snap.wifi-ap.backend
   ```

   WiFi-AP default SSID **Ubuntu** should now visible to clients.

### Bluetooth

To connect to a Bluetooth device like a Bluetooth keyboard:

1. Run the `#bluetoothctl -a` command to start **bluetoothctl** console.

   The bluetoothctl console is opened.
2. Run the `$power on` command to power on the Bluetooth device.
3. Register the agent for keyboard:

   ```
   $agent KeyboardOnly
   $default-agent
   ```
4. Run the `$pairable on` command to put the Bluetooth controller in pair-able mode.
5. Run the `$scan on` command to scan nearby Bluetooth device.
6. Run the `$scan off` command to stop scanning after Bluetooth keyboard is found.
7. Run the `$pair <MAC address of bluetooth keyboard>` command to pair the Bluetooth keyboard.
8. Enter PIN Code on Bluetooth keyboard if needed.
9. Run the `$trust <MAC address of bluetooth keyboard>` command to turst the Bluetooth keyboard.

10. Run the `$connect <MAC address of bluetooth keyboard>` command to connect the to the Bluetooth keyboard.
11. Run the `$quit` command to quit the **bluetoothctl** console.

## Flashing a new OS Image

### Pre-requisites

- USB 2.0 or USB 3.0 flash drive (4GB min.)
- Ubuntu 15.04 ISO.

  **NOTE: You can download the latest version of the Ubuntu ISO file from http://releases.ubuntu.com.**
- A released Ubuntu Core 15.04 image from Dell/Canonical: <unique name>.img.xz
- Dell Edge Gateway 5000 series hardware
- LCD monitor
- USB keyboard
- USB mouse
- HDMI cable
- Ethernet cable (x2)
- Ubuntu workstation with Ubuntu 14.04 release or higher.

### Flashing new Ubuntu OS image

1. Download Ubuntu 15.04 iso image from **www.releases.ubuntu.com**.
2. Insert USB flash drive into Ubuntu Workstation.
3. Start the **Startup Disk Creator** application. It can be found by typing `Startup Disk Creator` in the Unity Dash.
   a. Select **ubuntu- 15.04-desktop-amd64.iso**, in the top pane **Source disk image (.iso) or CD**. If the **.iso** file is not listed there, click **Other** to locate and select the **.iso** file.

      **NOTE: It is not necessary to erase the USB flash drive, however it is advisable that you do so.**
   b. Click **Erase**.
   c. Select the first bootable partition on the USB device as the disk to use.
   d. The bootable partition should be formatted as either an **FAT16** or **FAT32** file system. This is the default for most USB flash drives.
   e. Click **Make Startup Disk**.

      The message **USB drive created successfully** is displayed.
4. Unmount by right-clicking on the USB device icon on the Unity launcher. Choose **Safely Remove** the USB drive, and remove the USB flash drive.
5. Remove (if it still inserted) and reinsert the USB flash drive.
6. Copy the downloaded image file **<unique name>.img.xz** to the USB drive root directory.
7. Unmount and remove USB flash drive from the Ubuntu Workstation.
8. Insert USB flash drive into the Edge Gateway.
9. Turn on and boot-up the Edge Gateway.
10. Choose your preferred language and click on **Try Ubuntu**.

    Ubuntu live desktop should appear.
11. Flash Ubuntu Core Image to the Edge Gateway:
    a. Start the **Terminal** application. It can be found by typing `Terminal` in the **Unity Dash**.

       **CAUTION: dd command erases the content of the drive it writes to.**
    b. Type the following command `(plano)ubuntu@localhost:~$ sudo xzcat /cdrom/ stlouis-<version >.img.xz | sudo dd of=/dev/xyz bs=32M ; sync`—where “xyz” is the name of the drive on the system.
12. Reboot the system, and remove USB drive.

    Ubuntu Core is installed on your Edge Gateway.

## Flashing the BIOS

Prerequisites

- BIOS file. Download the file from **www.dell.com/support**.
- USB 2.0 or USB 3.0 flash drive (4GB min)
- Turn off the Edge Gateway has been turned off.

1. On a separate computer, unzip the BIOS update file that you downloaded from **www.dell.com/support**.
2. Open the extracted file folder Edge_Gateway5000_1.X.X.
3. Copy the BIOS update file, it is labeled Edge_Gateway5000_1.X.X.exe, to a USB flash drive.
4. Insert the USB flash drive in one of the available USB ports on the Edge Gateway.
5. Power on the Edge Gateway.
6. Press F12 when the Dell logo is displayed on the screen to enter the One-time boot screen.
7. On the One-time boot screen, choose **Flash the BIOS** .
8. On the next screen, select the BIOS file (Edge_Gateway5000_1.X.X.exe) on the USB key.
9. Start the Flash process.
10.

# Wind River Linux

## Overview

The Edge Gateway is shipped with Wind River Linux IDP-XT version 3.1. For more information on Wind River operating system, see www.windriver.com/support.

More generic details and references on running Wind River Linux IDP 3.1 on a Gateway product, see www.intel.com/gatewaytraining.

## Boot up and login

Before configuring the Wind River OS, connect a keyboard, mouse, and monitor to the Edge Gateway, or connect to the Edge Gateway through a KVM session, Dell Wyse Cloud Client Manager (CCM), or Dell Command | Monitor (DCM).

**NOTE: For more information about using the CCM, see the CCM documentation available at www.cloudclientmanager.com.**

**NOTE: For more information about using the DCM, see the DCM documentation available at www.dell.com/clientsystemsmanagement.**

Power On the Edge Gateway to boot into Wind River Linux OS. The Wind River Linux does not have a graphical user interface (GUI).

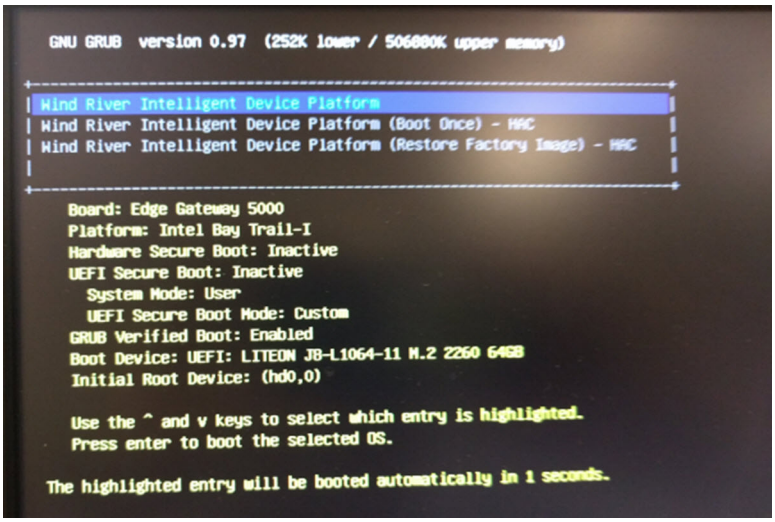


Log into the OS on the terminal with the following default credentials.

- root@WR-IDP-xxxx login: `root` (where xxxx is the version of the Wind River Linux)
- Password: `root`

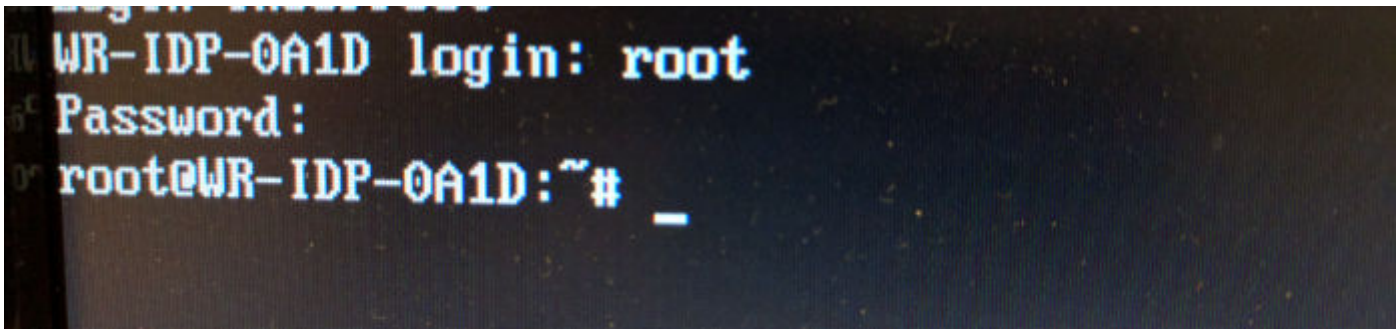


## Restoring Wind River Linux

**CAUTION: Following these steps deletes all the data on your system.**

You can restore Wind River Linux on the Edge Gateway using the recovery OS image on the boot partition which resets the run-time image back to the factory image if you encounter any of the following situations:

- You are unable to start Wind River Linux
- The Wind River Linux operating system is damaged.

Connect a keyboard, mouse, and monitor to the Edge Gateway, or connect to the Edge Gateway through a KVM session, Dell Wyse Cloud Client Manager (CCM), or Dell Command | Monitor (DCM).

1. Boot to the OS menu
2. Choose the `Wind River Intelligent Device Platform (Restore Factory Image)` option and press Enter.

This restores the run-time image back to factory OS image state.

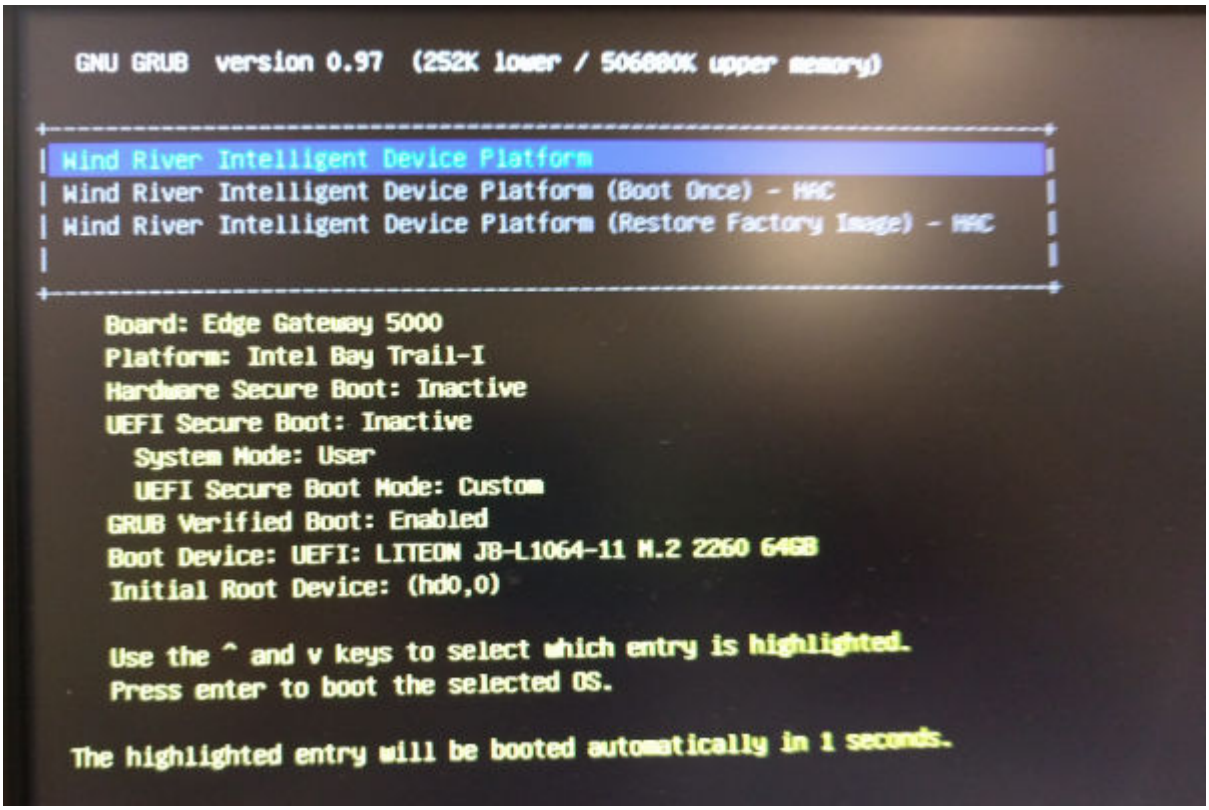


## Wind River Linux Basic Functions

### Preinstalled Packages

Run the `root@WR-IDP-xxxx:~# rpm -qa` command to list all the packages installed on the Wind River Linux OS.

**NOTE: If you are looking for a specific package, you have to pipe the output of the `root@WR-IDP-xxxx:~# rpm -qa` command to search for that specific package.**

Expected result: Device: *xxxx-xxxxxxxx-xxxx-xxxx-xxxx-xxxxxxxxxxxx-xxxx*

### UEFI Capsule update capability

Run the `fwupgmgr` tool/commands are used to update UEFI BIOS firmware on the system. The UEFI BIOS for this system is released through online **Linux Vendor File System** based methods.

Operation command: `root@WR-IDP-xxxx:~# fwupdmgr get-devices`

Expected result: (Device found) `Device: xxxx-xxxxxxxx-xxxx-xxxx-xxxx-xxxxxxxxxxxx-xxxx`

### Watchdog Timer

Running the `root@WR-IDP-xxxx:~# systemctl status watchdog` command displays the status of **Watchdog** timer service.

Expected result: Example of the output is shown below.

```
root@WR-IDP-B425:~# systemctl status watchdog
â watchdog.service - Software watchdog daemon
   Loaded: loaded (/lib/systemd/system/watchdog.service; enabled)
   Active: active (running) since Fri 2016-10-14 15:27:51 UTC; 3 days ago
  Process: 853 ExecStart=/usr/sbin/watchdog (code=exited, status=0/SUCCESS)
 Main PID: 860 (watchdog)
   CGroup: /system.slice/watchdog.service
           ââ860 /usr/sbin/watchdog

Warning: Journal has been rotated since unit was started. Log output is incomplete or unavailable.
root@WR-IDP-B425:~#
```

### TPM support (HW TPM module dependency)

Run the `root@WR-IDP-xxxx:~# tpm_statistic` command displays the status of TPM service.

If the TPM is functional and enabled in the BIOS, below would be the expected results, when `tpm_statistic` command is executed.

Expected result: The expected result is for TPM Chip Presence: Normal. Example of the response to the above command should be similar to the output shown below.

```
root@WR-IDP-B425:~# tpm_statistic
TPM Statistic - Version 1.0

checking for awk ...          /usr/bin/awk
checking for cat ...          /bin/cat
checking for tpm_sanitycheck ... /usr/bin/tpm_sanitycheck

TPM Chip Presence:  Normal
Owned Status:       Owned
Cleared Status:     Not Cleared
Active Status:      Actived
Enabled Status:     Enabled

Manufacturer:       0x57454300
TCG version:        1.2
Firmware version:   5.81

Major Dev No:       10
Minor Dev No:       224
Device Node Name:   /dev/tpm0

root@WR-IDP-B425:~#
```

### System reboot

To reboot the system, as a root user logged in to the system, enter the `root@WR-IDP-xxxx:~# reboot` reboot at the command prompt.

Expected result: System reboots back to the login prompt successfully.

### System PowerOff

Run the `root@WR-IDP-xxxx:~# shutdown now` command to shuts down the system.

Expected result: System shuts down successfully.

### Network Interface

To determine the default supported network interface, type the `root@WR-IDP-xxxx:~# ifconfig` at the command prompt.

Expected result: The following are the default network interfaces supported out of the box.

- `br-lan`
- `eth0`
- `eth1`

- `lo`
- `wlan0`

### Network configuration and default setup

The following commands can be used to configure different network interfaces on the system with Wind River Linux on it.

Network configuration on **Wind River Linux IDP 3.1** environment can be performed through the **LuCi** web interface.

**NOTE: The LuCi web interface supported in the default OS image.**

The user can reach the LuCi web interface on the system using the ***https://< IP-Address-of-eth0-interface-of-the-gateway >*** following URL from a different system with a web browser and the system should be on the same network or connected to the system's network through proxy.

The default login credentials to the LuCi web interface are `root/root`. The IP address of the **eth0** network port can be identified by performing the `ifconfig`command on the Linux terminal.

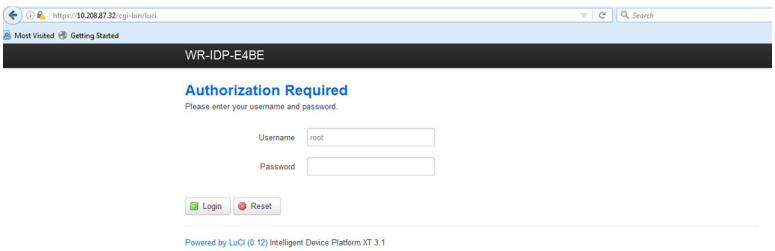


### Network interface configuration

The Edge Gateway contains the following default network configurations:

- **br-lan** — Bridged LAN Interface
- **eth0** — Wired LAN interface 0
- **eth1** — Wired LAN Interface 1
- **lo** — Loop back interface
- **wlan0** — Wireless LAN (or Wi-Fi) interface mode

**eth0** — Wired LAN Interface. By default **eth0** interface is configured to be DHCP client interface. When this ethernet port is connected to a DHCP server, this interface obtains an IP address from the DHCP server.

Run the `root@WR-IDP-xxxx:~# ifconfig eth0` command to identify the IP address. The network IP interface information is available under `inet addr: x.x.x.x` where x.x.x.x is the IP address of the system.

**eth1** — Wired LAN interface. The default configuration for the second wired ethernet interface **eth1** serves as DHCP server and provides IP addresses to any device requesting IP address from the system. The devices requesting DHCP addresses get IP addresses in the range of `192.168.1.x` subnet. The default DHCP server is at `192.168.1.1` address. For reconfiguring this network interface by logging in to the **LuCi** web interface.

**Wlan0** — Wireless LAN or Wi-Fi interface. The default configuration for the **WLAN0** interface on the system with Wind River Linux is in access point (AP) mode. The mode can be changed to client mode through **LuCi** web interface.

**Br-lan** — The bridged LAN interface. By default, the bridge interface is configured to bridge ethernet **eth1** and the **WLAN0** interface, so any devices that would like to connect to the system in WiFi mode or through **eth1** wired mode can obtain IP addresses

through the system. The issued IP addresses by the access point and **eth1** interface are in the `192.168.1.x` subnet. The default access point SSID for the access point is **IDPDK-5591**. The bridge configuration can be modified using LuCi web interface. Follow Intel/Wind River's documentation for more details on configuring, WAN, WLAN, and br-LAN network interfaces using LuCi web interface.

## Bluetooth configuration

The system supports an integrated Bluetooth network interface. The Bluetooth network can be configured using LuCI web interface on the Wind River Linux OS. To configure Bluetooth interface on the system with Wind River Linux OS.

1. Log in to the LuCI web interface as identified in the steps referenced in the previous sections.
2. Bluetooth configuration is supported under **Network** tab drop-down menu **Bluetooth** of the Web Interface.

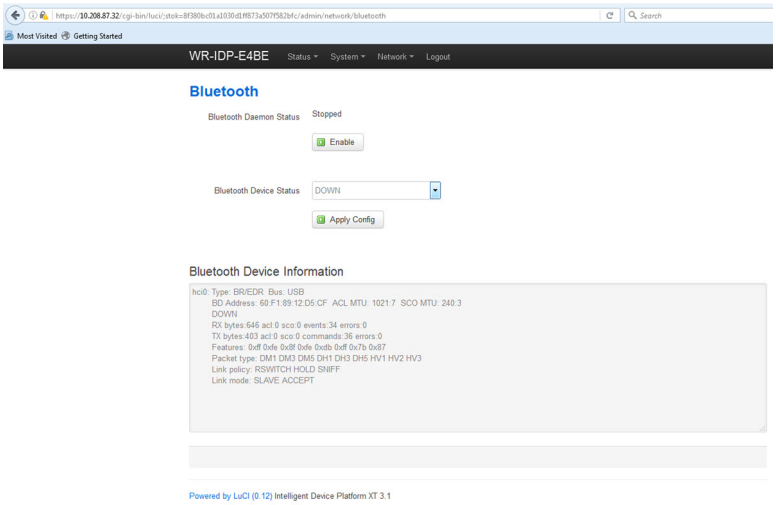


- Enable **Bluetooth** interface in this page and hit **Scan** to identify nearby other Bluetooth enabled devices.

## Wireless WAN network interface configuration

Add-on modules can be installed on the edge gateway system to get Wireless WAN (WWAN) connectivity.

- 4G-LTE — Interface using Telit LE910 module for carrier AT&T
- 4G-LTE — Interface using Telit LE910 module for carrier Verizon
- HSPA+ — Interface using Telit HE910 module

### LE910 WWAN connection configuration

Follow the *Service Manual* to install the LE910 module and the corresponding carrier SIM card in the system. After the module and SIM card is installed, activate the WWAN connectivity by:

**NOTE: The default Wind River Linux OS image currently uses AT commands to configure WWAN interface and LTE connectivity.**

**NOTE: LuCi web interface currently does not support configuring the WWAN interface.**

### Identifying installed WWAN module and Carrier

To identify the serial interface on the installed LE910 module's tty ACM interface, using dmesg command: `# dmesg | grep -i ttyacm`

The system may contain more than one USB ACM device other than *Telit LE910* or *Telit HE910* module. Based on the output for the **dmesg command**, identify the **ttyacm ports** that were enumerated, for example, below is the output for `dmesg | grep -i ttypacm` command for more than one USB ACM device on the system.

```
root@WR-IDP-0A1D:~# dmesg | grep -i ttyacm
[    1.471995] cdc_acm 1-2:1.0: ttyACM0: USB ACM device
[    2.597928] cdc_acm 1-4.1:1.0: ttyACM1: USB ACM device
[    2.608176] cdc_acm 1-4.1:1.2: ttyACM2: USB ACM device
[    2.622803] cdc_acm 1-4.1:1.4: ttyACM3: USB ACM device
[    2.643657] cdc_acm 1-4.1:1.6: ttyACM4: USB ACM device
[    2.656324] cdc_acm 1-4.1:1.8: ttyACM5: USB ACM device
[    2.660387] cdc_acm 1-4.1:1.10: ttyACM6: USB ACM device
```

Launch **minicom** terminal utility on the system with one of the USB ACM device port to identify that we have the correct USB ACM device for Telit LE910 device before configuring the device, e.g. below shows how to launch **minicom** with `ttyACM1` as interface:

- `# minicom -D /dev/ttyACM1`
- Inside **minicom**, type the following AT command to identify if it is the "Telit" device `AT+GMI`
- If the response to the above command is Telit, then you have identified the correct device ttyacm port.
- If the output is not Telit or Error, then you have to exit out of **minicom** and start **minicom** with a different port like e.g. `/dev/ttyACM0 or /dev/ttyACM3` etc,
- Example of starting **minicom** with `/dev/ttyACM1` as port of communication below.

  `root@WR-IDP-0A1D:~# root@WR-IDP-0A1D:~# minicom -D /dev/ttyACM1`

**Configuring the WWAN carrier parameters**

Inside **minicom** terminal, the following AT commands have to be issued in sequence to configure the LTE module, the line with **DESCRIPTION** are references to the AT commands to type and are not to be entered as a part of the AT commands themselves

DESCRIPTION: Check that the SIM is inserted and PIN is unlocked using the `at+cpin?` command

DESCRIPTION: If the SIM is locked with a PIN the `at+cpin="1234"` AT command can be used to unlock the SIM. Where the SIM PIN is 1234, if the PIN is different, use appropriate PIN number in the command below.

DESCRIPTION : Setting up the APN. NCM can be activated using every available CID,

**NOTE: Skip this step for Verizon as it is preprogrammed (use `AT+CGDCONT?` to identify if the CID3 is vzwinternet).**

The `at+cgdcont=3,"IP","broadband"` command has to be issued for AT&T based SIM. In the command, `3` is the CID(Connection ID), this can be between 1 to 5, 3 is shown to keep the value consistent between VZ and ATT based solution. `IP` in the command indicates the TCP-IP protocol. `broadband` in the command is the name assigned by AT&T as a network ID or APN to connect to logically, this name is assigned by the carrier.

DESCRIPTION : Check the state of the modem

```
at+cops?
at+cgatt?
```

DESCRIPTION: Run the `at#ncm=1,3` command to enable NCM on CID 3 (this command must be sent on a USB instance (in this case USB0 or USB3)

DESCRIPTION: Run the `at#ncm=1,3` to activete the PDP context.

DESCRIPTION: Read IP address, Gateway address and DNS address from the module

```
at+cgcontrdp=3
REPONSE:
+CGCONTRDP:
3,6,"vzwinternet.mnc480.mcc311.gprs","100.176.244.64.255.255.255.0","100.176.244.65","10.133
.17.210","0.0.0.0","0.0.0.0","0.0.0.0"
OK
```

**Establishing LTE WWAN connectivity**

Description: The following are a capture from a sample session that was performed on a Dell Edge Gateway platform with default Wind River Linux OS image to establish LTE connectivity using Verizon LE910 module and Verizon SIM card. The commands highlighted were typed and the other is response from the system. For AT&T LE910 module and AT&T SIM environment use "*broadband*" to replace "*vzwinternet*" in the following set of commands.

In order to open up additional Linux terminal in Wind River Linux, press Alt-F2 key, this will take you to another Linux login prompt. Login using your root/root credentials.

Command typing is highlighted in *Itlaics*

```
root@WR-IntelligentDevice:~# minicom -D /dev/ttyACM0
Welcome to minicom 2.7
OPTIONS: I18n
Compiled on  16:20:45.
Port /dev/ttyACM0, 21:33:05
Press CTRL-A Z for help on special keys
at+cgdcont=3,"IPV4V6","vzwinternet"
OK
at+cgdcont?
+CGDCONT: 1,"IPV4V6","vzwims","",0,0
+CGDCONT: 2,"IPV4V6","vzwadmin","",0,0
+CGDCONT: 3,"IPV4V6","vzwinternet","",0,0

OK
at#ncm=1,3
OK
at+cgact=1,3
OK
at+cgcontrdp=3
+CGCONTRDP: 3,7,"vzwinternet.mnc480.mcc311.gprs","100.106.47.7.255.0.0.0","100.1
06.47.8","198.224.157.135","0.0.0.0","0.0.0.0","0.0.0.0"
+CGCONTRDP: 3,7,"vzwinternet.mnc480.mcc311.gprs","254.128.0.0.0.0.0.0.0.0.0.71.4
6.110.1.1.255.255.255.255.255.255.255.255.0.0.0.0.0.0.0.0","0.0.0.0.0.0.0.0.0.0.
0.0.0.0.0.0","198.224.157.135","0.0.0.0.0.0.0.0.0.0.0.0.0.0.0.0","0.0.0.0.0.0.0.
0.0.0.0.0.0.0.0.0","0.0.0.0.0.0.0.0.0.0.0.0.0.0.0.0"

OK
^A X Y

root@WR-IntelligentDevice:~# ifconfig wwan0 100.106.47.7 netmask 255.0.0.0 up
root@WR-IntelligentDevice:~# route add default gw 100.106.47.8 wwan0
root@WR-IntelligentDevice:~# echo nameserver 198.224.157.135 >>/etc/resolv.conf
root@WR-IntelligentDevice:~# minicom -D /dev/ttyACM0
Welcome to minicom 2.7
OPTIONS: I18n
Compiled on Dec 17 2015, 16:20:45.
Port /dev/ttyACM0, 21:33:05
Press CTRL-A Z for help on special keys
at+cgdata="M-RAW_IP",3
CONNECT
OK
^A X Y
root@WR-IntelligentDevice:~# ping 8.8.8.8
PING 8.8.8.8 (8.8.8.8) 56(84) bytes of data.
64 bytes from 8.8.8.8: icmp_seq=1 ttl=52 time=36.9 ms
64 bytes from 8.8.8.8: icmp_seq=3 ttl=52 time=33.5 ms
64 bytes from 8.8.8.8: icmp_seq=4 ttl=52 time=31.2 ms
64 bytes from 8.8.8.8: icmp_seq=5 ttl=52 time=32.6 ms
^C
--- 8.8.8.8 ping statistics ---
5 packets transmitted, 4 received, 20% packet loss, time 4004ms
rtt min/avg/max/mdev = 31.276/33.585/36.903/2.078 ms
```

**Disable WWAN0 Connection**

Description: The following method can be used to disable or delete the WWAN connection that was setup using the descriptions mentioned in the previous sections.

1. Launch minicom as defined in the other sections and choose the appropriate ttyACM port for the Telit module
2. Inside the minicom terminal send the following AT commands

   ```
   At+gmi   (to make sure it is the Telit module)
   At+cgatt=0 (Response should be NO CARRIER)
   AT+cgatt=1
   ```

3. Exit out of the minicom terminal by pressing Ctrl-A, Z and X.
4. On the Linux prompt enter the `# ifconfig wwan0 down` command to disable wwan0.

Sample Session to disable WWAN0 Connection:

```
root@WR-IntelligentDevice:~# minicom -D /dev/ttyACM0
Welcome to minicom 2.7
OPTIONS: I18n
Compiled on Dec 17 2015, 16:20:45.
Port /dev/ttyACM0, 21:33:05
Press CTRL-A Z for help on special keys
at+cgact=0,3
OK
^A X Y
root@WR-IntelligentDevice:~# ifconfig wwan0 down
```

**HE910 (HSPA+) WWAN connection configuration**

Description: Follow the hardware installation guide to install the HE910 module and the corresponding carrier SIM card in the system. Once the hardware module and the SIM are installed follow the instructions below to activate 3G HSPA+ connectivity.

The HSPA connection on Wind River Linux can be activated using the following UCI command set or through LuCi web interface. Below are samples steps to configure 3G WWAN interface:

1. Checking the network configuration.

   ```
   root@WR-IDP-XXXX:~# cat /etc/config/network
   ...

   config interface 'wwan'
       option ifname '3g-wwan'
       option proto '3g'
       option device '/dev/ttyACM0'
       option ppp_redial 'demand'
       option defaultroute '1'
       option peerdns '1'
       option service 'umts_first'
       option sconnservice 'UMTS'
       option dialnumber '*99***1#'

   config device 'modem_cell'
       option name 'modem_cell'
       option present 'Yes'
       option protoall '3g'
       option pppddev '/dev/ttyACM0'
       option statedev '/dev/ttyACM3'
       option Manufacturer 'Telit'
       option Product 'HE910'
       option Vendor '1bc7'
       option ProdID '0021'
       option SerialNumber '357164040868450'
       option Rev '12.00.004'

   config device 'sim_card'
       option name 'sim_card'
       option present 'No
   ```

2. Add **apn** according to the SIM card operator. For e.g. "3gnet" for China Unicom

```
root@WR-IDP-XXXX:~# uci set network.wwan.apn="3gnet"
root@WR-IDP-XXXX:~# uci commit network
root@WR-IDP-XXXX:~# uci get network.wwan.apn3gnet
```

3. Setup WWAN interface.

   restart wwan interface: `root@WR-IDP-XXXX:~# ifdown wwan ; ifup wwan`

   or

   restart all interfaces: `root@WR-IDP-XXXX:~# systemctl restart netifd`

4. Step 2 and Step 3 can also be performed through in **LuCi** web interface.

   On the **WWAN** tab. Set APN first, and then click **Save & Apply** button to apply the changes as shown in the sample LuCi web interface.

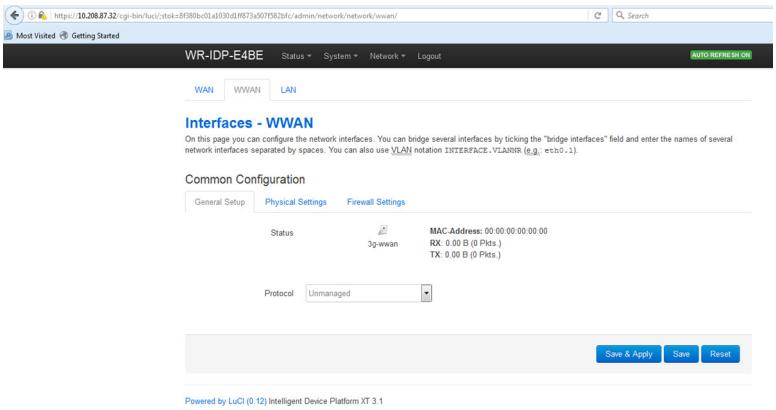


5. Check the 3g-wwan interface is ready.

```
root@WR-IDP-XXXX:~# ifconfig 3g-wwan
3g-wwanLink encap:Point-to-Point Protocol
          inet addr:10.3.203.207  P-t-P:10.3.203.207  Mask:255.255.255.255
          UP POINTOPOINT RUNNING NOARP MULTICAST  MTU:1500  Metric:1
          RX packets:238 errors:0 dropped:0 overruns:0 frame:0
          TX packets:322 errors:0 dropped:0 overruns:0 carrier:0
          collisions:0 txqueuelen:3
          RX bytes:35017 (34.1 KiB)  TX bytes:35054 (34.2 KiB)
```

## Register Edge Gateway at Intel Developer Hub

The Dell Edge Gateway 5000 series with Wind River Linux IDP 3.1 supports Developer Hub portal within the Gateway. This portal can be used for performing variety of configuration functions on the Gateway along with using it for developing software layers on top of the base Wind River Linux OS Image, sensor devices integration to the gateway and hardening of the combined application / base OS image for deployment.

The developer portal has to be used for registering the Edge Gateway 5000 at Intel Marketplace to obtain credentials to connect to the software package update repository. The following are the two key URLs required for developer solutions on the Edge Gateway using Wind River Linux IDP.

http://shopiotmarketplace.com : This is registration site for registering your Gateway device with Wind River Linux and obtaining credentials for Windshare repository access for package updates.

**NOTE: For Dell Edge Gateway with Wind River Linux OS image solution, your (customer's) Dell point of contact should have already registered your contact information at Intel IoT Marketplace and you should have received notification from Intel marketplace on procedure for you to get login credentials to Windshare repository from where software packages and updates to Wind River Linux OS can be obtained. If you have not received notification from Intel IoT Marketplace, contact your Dell sales point of contact to get you registered.**

Some of the detailed documentation on how to develop for Wind River Linux OS image based Gateway 5000 solution and how to utilize built in Developer Hub are available at www.intel.com/gatewaytraining please refer to that site for more details.

The following steps gives basic guidelines to follow once you receive your Dell Edge Gateway 5000 product with Wind River Linux IDP 3.1 base OS image.

The Dell Edge Gateway 5000 product with Wind River Linux IDP 3.1 base image from the factory is shipped with particular version of the RCPL package(RCPL 13) from Wind River. The RCPL versions from Wind River are periodically updated by the Wind River team and it is recommended for the Edge Gateway user/customers to upgrade to the latest version of RCPL by following the procedure/ steps indicated below before developing software stack and middleware on top of the OS image. The latest RCPL image provides security updates and other bug fixes for the software packages.

- Connect the Ethernet WAN port ETH1 of your Dell Edge Gateway 5000 series platform that came with factory installed Wind River Linux OS image to an internet connected router that can assign a DHCP address to the Gateway's ETH1 interface. Make sure this connection has direct internet access outside of firewall and proxy connection during initial setup.
- Login into the OS using default root/root credentials on the Gateway. Find out the IP address of the ETH1 interface using ifconfig.
- In the linux prompt enter the `root@WR-IDP-XXXX:~# smart update` command to update the package cache and default repository channel. The smart update command updates the cache of already included update channels and repository.
- Enter the `root@WR-IDP-XXXX: smart channel --list` to list the default channels supported by the factory image on the Edge Gateway.
- At this point, with another browser enabled PC system connected to the same network as the Gateway , type in the IP address of ETH1 interface on the browser URL address, i.e. *http://<IP-Address-ETH1-Interface>*. Default evaluation of this was performed using Google Chrome browser, if available use Chrome browser.
- A pop-up window shows up with requiring the user to login. Log in to the browser window using "`gwuser`" as username and "`gwuser`" as password.

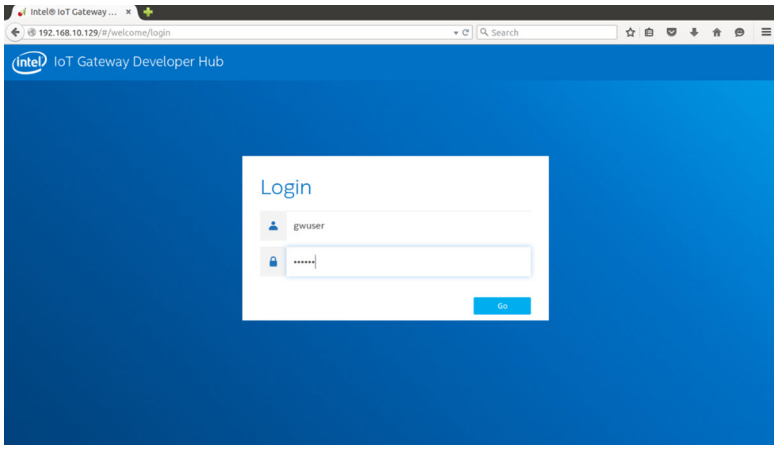


- Read license agreement and follow instructions to continue.

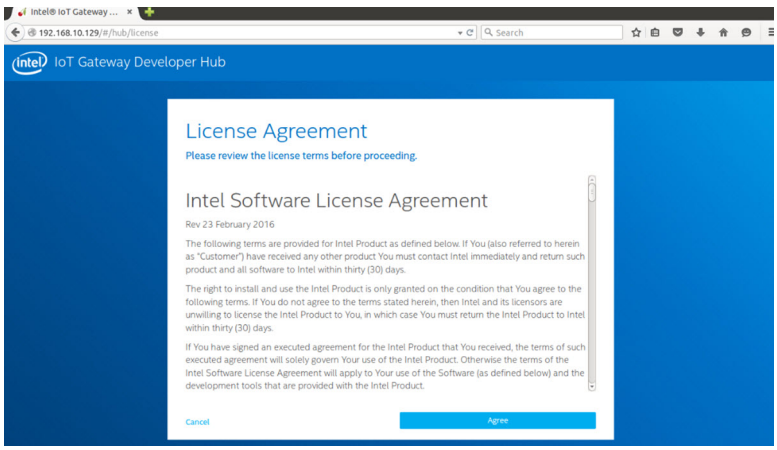

- Select the **packages** tab inside the IoT Developer Hub, search for `iot-developer-hub` package and select to update that package only, it is not necessary to update other packages at this time. Give few minutes for package to download and update.
- After update if the browser session terminates or logs the user out, follow the procedure above to log back in into the web interface. Since the update might be happening it might take couple of minutes to re-connect for the web interface to respond, wait until the interface allows to log the user back in.
- Once logged back into the developer hub, go into the "Administration" tab and choose "Upgrade to Pro" option. This tab updates all the Pro Packages from Wind River that are already licensed and available free to install with the Gateway 5000 series product with Wind River OS license.
  - When Upgrade to Pro is selected, the user will be asked to enter Wind River credentials for Windshare repository. The user's sales contact at Dell should have already registered your contact information with Intel/Wind River and the user should have received email notification from Intel / Wind River describing the procedure and process to obtain the Windshare repository credential from Intel/Wind River.

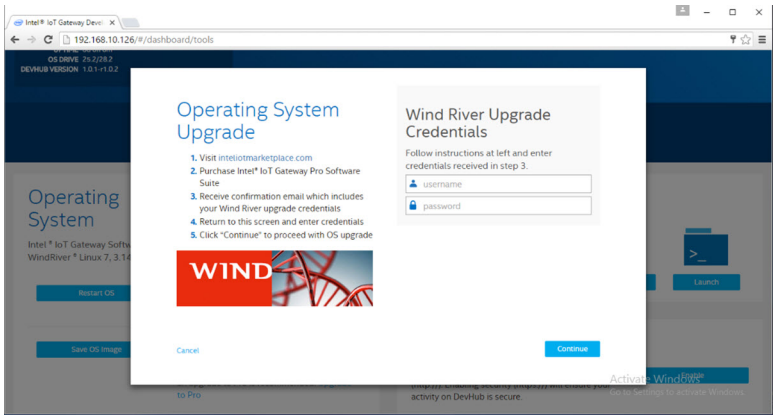


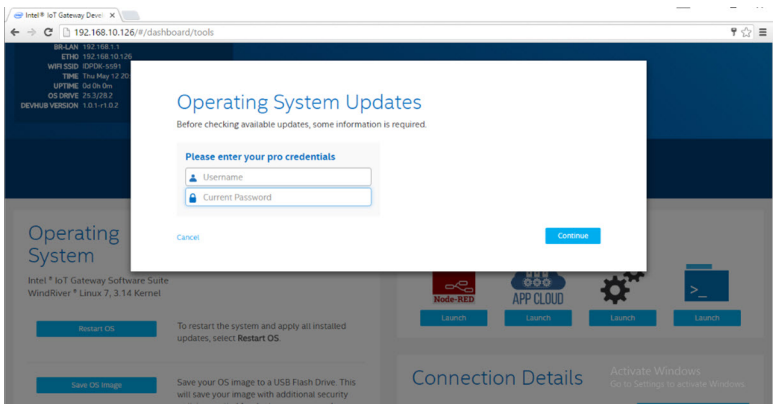


  - If you have not gotten such email, contact your sales contact at Dell to get you through the registration process to obtain credentials for the Windshare repository.
  - When the WindShare credentials are entered, additional set of repositories from where packages can be downloaded are added to the channel list. The additional set of channels can be reviewed by using the smart command in the Linux prompt – `smart channel --list`.
- Once the Wind River credentials are entered during the Upgrade to Pro package selection, the upgrade process should continue and would take some amount of time to complete. Wait for few minutes for the upgrade to complete.
- Once upgrade to Pro packages are complete, exit out of the browser and clear browser cookies and cache, re-login back into the Developer Hub using the procedure described above and under "Administration " tab choose "Install OS Updates". The system might ask for Windshare Pro credentials, re-enter the Windshare repository credentials obtained as describe in the steps above.
- At this point the system should check for update availability in the Windshare repository and would indicate if any updates are available, if available initiate the update process using the Install OS Updates. Such updates could take possibly up to an hour or more depending on your network connection. Let the system update to complete and make sure the internet connection is continuous.

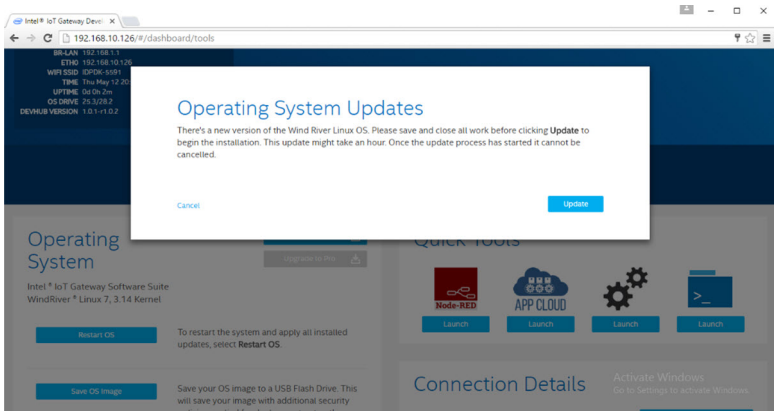


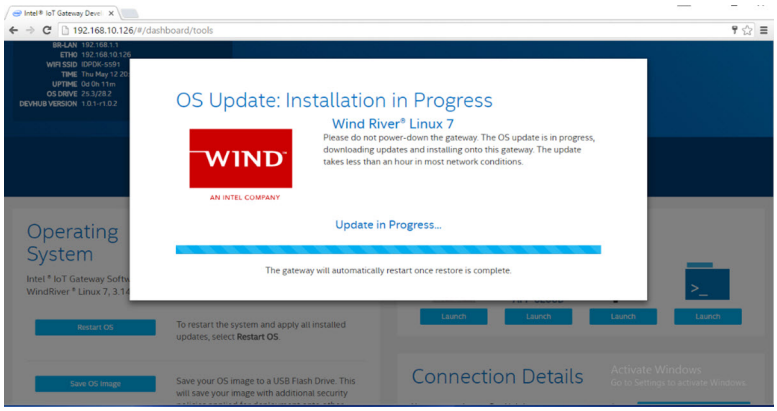


- Once the update of the OS is complete, the Gateway should reboot and now the system should be upgraded to the latest RCPL release available for the Gateway 5000 product at the Windshare repository. At this point the user should have an environment ready to develop other layers of applications on top of the Gateway 5000 system.

  Below are some of the sample screenshots of the Developer Hub web interface described in the steps above.

Below are some of the sample screenshots of the Developer Hub web interface described in the steps above.

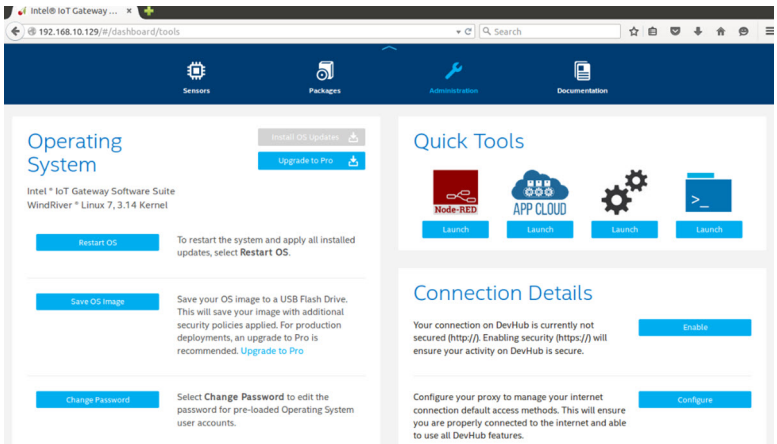

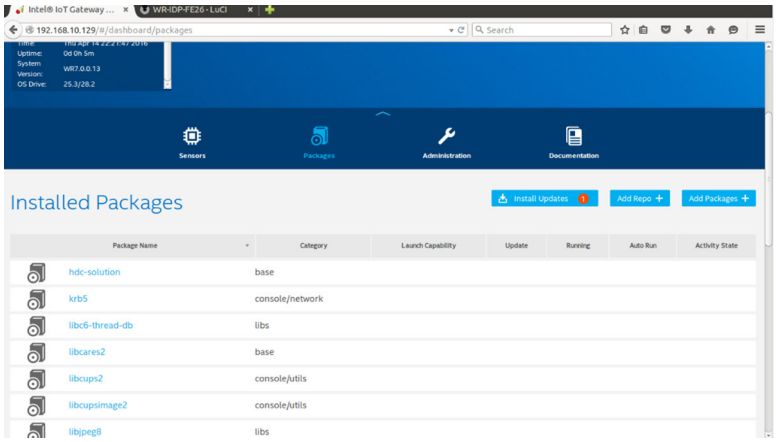


- The package tab indicates installed packages on the platform, update to the packages can be performed and additional repository channels can be added through the developer hub portal.

## Common port mappings on Edge Gateway 5000 with Wind River OS

### Serial Port Mapping

Description: The following table show the serial port mapping on the Edge Gateway 5000 platform installed with Dell factory installed Wind River Linux OS image. For dip switch setting on the Edge Gateway for RS422 and RS485 ports please refer to appropriate hardware installation guide document.

**NOTE: Device nodes are ordered by port position starting from the leftmost RS232 port.**

**Table 3. Device nodes of serial ports on the Dell Edge Gateway 5000 series**

| No. | Port Type | Connector | Device Node |
|---|---|---|---|
| 1 | RS232 | DB9 | **/dev/ttyS0** |
| 2 | RS422_485 | 5 pin terminal | **/dev/ttyS4** |
| 3 | RS485 | 3 pin terminal | **/dev/ttyS5** |
| 4 | RS485 | 3 pin terminal | **/dev/ttyS2** |

### Edge Gateway I/O Module GPIO Mapping

Description: The GPIOs on the Gateway are managed through GPIO driver on the OS. The cloud LED on the Gateway is attached to one of the GPIOs and below are the steps on how to control the cloud LED in Wind River Linux OS.

1. Export Cloud LED PIN:

```
root@WR-IDP-XXXX:~# echo 346 > /sys/class/gpio/export
root@WR-IDP-XXXX:~# echo out > /sys/class/gpio/gpio346/direction
```

2. Turn on Cloud LED:

```
root@WR-IDP-XXXX:~# echo 1 > /sys/class/gpio/gpio346/value
```

3. Turn off Cloud LED:

```
root@WR-IDP-XXXX:~# echo 0 > /sys/class/gpio/gpio346/value
```

### Edge Gateway I/O Module based GPIO Mapping

Description: The GPIOs on the external I/O module for the Edge Gateway are behind PIC microcontroller. The PIC microcontroller is exposed to the host system and to the host OS as a USB-HID device. Software application developed to communicate with the GPIOs may use the protocol defined in following set of references to communicate with the GPIO modules. There are no native application software available on the factory OS image that communicates with the IO module GPIOs.

The I/O module GPIO mapping and references will be provided as a separate technical sheet and article and will be released at the support web portal for user/customer reference.

### Edge Gateway I/O Module PCIe expansion mapping

Description: The PCIe slot on the external I/O module for the Edge Gateway are driven directly from the host PCIe bus. Since it is generic PCIe expansion there are no PCIe device specific drivers integrated into the Wind River Linux OS image. If there are specific PCIe card used on this slot, contact the vendor of that PCIe card to verify if they have Linux drivers and if that is a kernel mode driver such driver may have to be ported to Wind River Linux OS environment which uses 3.14 Linux kernel version on the Wind River Linux OS image shipped from the factory on the Gateway.

### Edge Gateway Zigbee Module Functions

Description: The Edge Gateway supports a USB Zigbee dongle as an optional add-on hardware. When the Zigbee dongle is present on the system it is enumerated to the OS as a USB device and accessed through cdc_acm kernel driver layer on the Wind River Linux host. There are no native application software on the factory installed OS image to perform Zigbee protocol for this device. A basic communication with the Zigbee module can be verified using minicom terminal interface application as well as to get basic information from the Zigbee dongle.

For example: The following command would launch minicom with device /dev/ttyACM6 assuming the Zigbee dongle is enumerated into /dev/ttyACM6 port.

```
root@WR-IDP-XXXX:~# minicom -D /dev/ttyACM6
```

The Screenshot below shows the response from the Zigbee dongle when the Zigbee USB dongle is enumerated under /dev/ttyACM6 port.

- Sending an `AT` command inside minicom session should return an `OK` from the device.

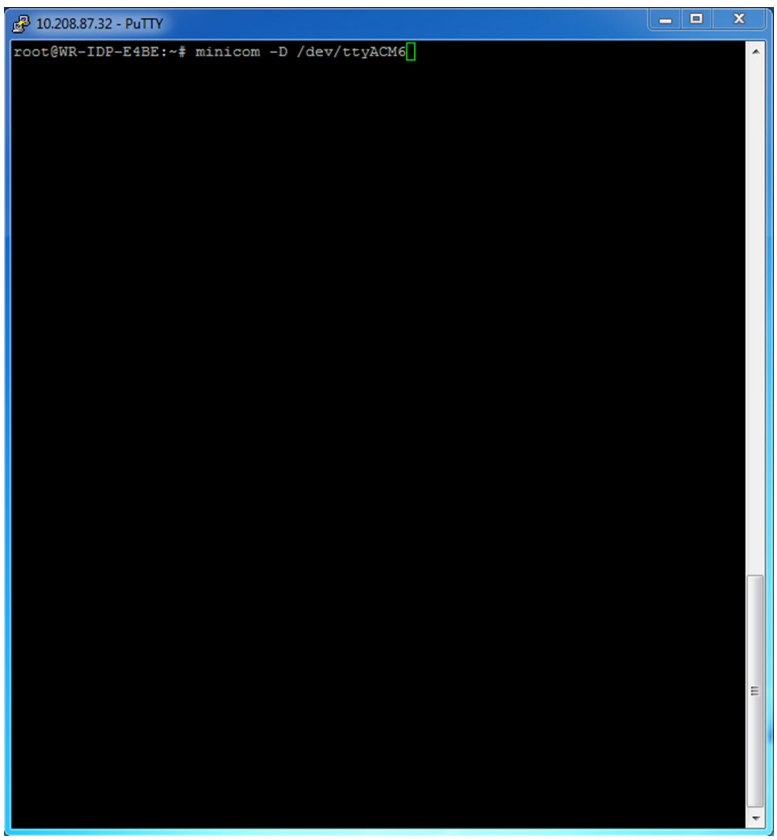


- Sending an `ATI` command inside the minicom session should return the module information like “Telegesis ETRX 3588” etc.

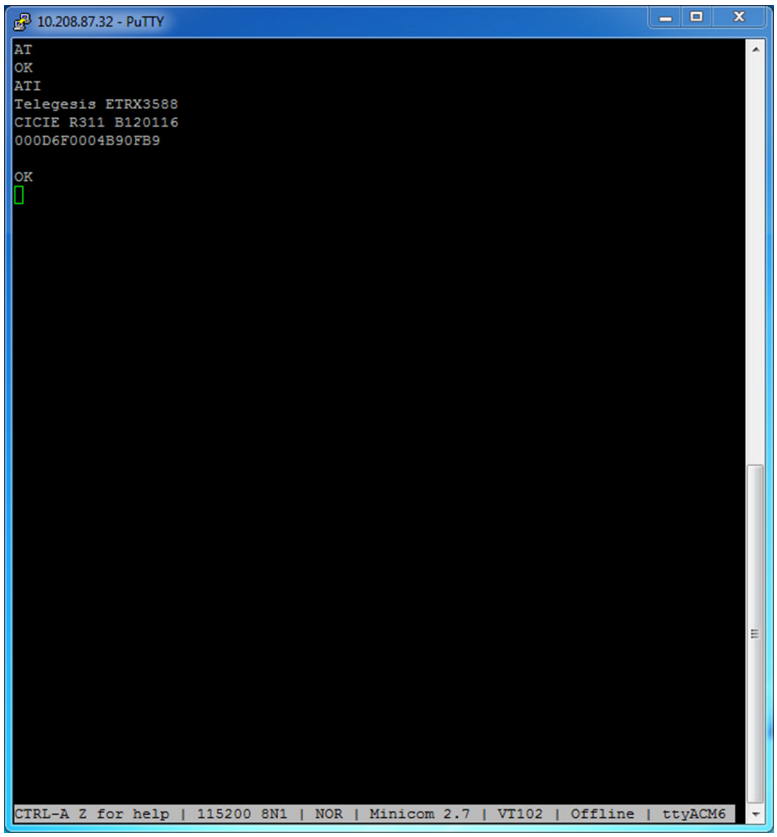


**Edge Gateway CAN Module Functions**

Description: The Edge Gateway supports an optional CAN module that is mounted inside the Gateway itself. The CAN module is enumerated to the OS as a USB device as USB HID device to the Linux kernel driver layer on the Wind River Linux host. There are no native application software on the factory installed OS image to perform CAN protocol for this device.

The CAN module presence on the Gateway can be identified by issuing “lsusb” command in the Linux prompt and looking for “Microchip Technology Inc.,” based device.

For CAN communication protocols and software API references a separate set of references and articles will be provided outside of this document.

5

# System specifications

NOTE: Offerings may vary by country; not all configurations are available in all regions.

## Component types

| Component | 5000 | 5100 |
|---|---|---|
| PCB | Standard FR4 | Isola 370HR |
| CPU | Intel E3B25/E3827 | Intel E3B25/E3827 |
| Memory | Dell-managed | Dell-managed |
| BIOS Flash | Dell-managed 128 MB SPI FLASH | Dell-managed 128 MB SPI FLASH |
| Super I/O | Fintek F81960D-I | Fintek F81960D-I |
| LAN on system-board | Realtek RTL81191-CG | Realtek RTL81191-CG |
| TPM | Nuvoton NPCT6SO series | Nuvoton NPCT6S4 series |
| SSD | 60D3 LITEON | 60D3 LITEON |
| WLAN | MURATA/ LBEE5ZZ1EN | MURATA/LBEE5ZZ1EN |
| WWAN | TELIT/HE910, TELIT/LE910-SV, TELIT/ LE910 | TELIT/HE910, TELIT/LE910-SV, TELIT/ LE910 |
| Coin-cell battery | CR2032 | BR2032 |

## Operating systems

Supported operating systems:

- Microsoft Windows 10 IoT Enterprise LTSB
- Ubuntu Snappy 15.04
- Wind River Linux IDP-XT 3.1

## Processor

| | 5000/5100 |
|---|---|
| Intel Atom E3825 | X |
| Intel Atom E3827 | X |

# Memory

| | 5000 | 5100 |
|---|---|---|
| Type | DDR3L | DDR3L |
| Memory channel | Single/dual | Single/dual |
| Minimum memory | 2 GB | 2 GB |
| Maximum system memory | 8 GB | 4 GB |

# Drives and removable storage

| | 5000/5100 |
|---|---|
| Supported number of mSATA hard drives (maximum) | 1 |
| 32GB M.2 Solid State Drive | X |
| 64GB M.2 Solid State Drive | X |

**NOTE: For hard drives, 'GB' means 1 billion bytes; actual capacity varies with pre-loaded material and operating environment and will be lower.**

# Communications—WLAN antenna

| General specifications | | |
|---|---|---|
| Antenna type | PCB Dipole | |
| Number of ports | 2 | |
| Frequency (GHz) | 2.4 to 2.5 | 4.9 to 5.9 |
| Voltage Standing Wave Ratio (VSWR) | 2:1 | 2:1 |
| Isolation (dB) | > 20 | > 20 |
| Peak gain | 3.5 dBi | 5.0 dBi |
| Average gain on sphere (3D) | > -4 dBi | > -5 dBi |
| Polarization | Linear | |
| Efficiency | > 55% | > 55% |

| Mechanical and environmental specifications | |
|---|---|
| Height | 105.60 mm (4.16 in) |
| Diameter | 36.20 mm (1.43 in) |
| IPX class | IP65 |

| Mechanical and environmental specifications | |
|---|---|
| Mounting | Wall mounted |
| Connector type | SMA male |
| Antenna color | White |
| Cable type | Plenum rated low loss RG58 |
| Cable color | White |
| Mounting bracket | Swivel type (plastic) |
| Mounting bracket length (approximate) | 175 mm (6.89 in) |
| Mounting bracket color | Black |
| Pig tail length | 500 mm ± 10 mm (19.69 in ± 0.39 in) |

| Coaxial cable specification | |
|---|---|
| Impedance | 50 ± 2.00 ohms |
| Structural return loss | -16 dB or better from 100-2500 MHz un-terminated sample (direct bridge method) |
| Nominal RTL reference | -16 dB or better to 6.0 GHz |
| Dielectric | Foam FEP |
| Dielectric (outer diameter) | 2.79 mm ± 0.076 mm (0.110 in ± 0.003 in) |
| Velocity of propagation | 80% |
| Center conductor | Solid copper, 0.94 mm ± 0.025 mm (0.037 in ± 0.001 in) |
| Shield #1 | Foil, aluminium/poly tape, adhered to dielectric |
| Diameter over foil | 3.02 mm ± 0.07 mm (0.119 in ± 0.003 in) |
| Shield #2 | Braid, 90% 36-AWG tin/copper |
| Outer jacket | Plenum PVDF, off-white, lead-free, and UV stable |
| Outer diameter | 4.52 mm ± 0.15 mm (0.178 in ± 0.006 in) |
| PLENUM rating | CMP(ETL)C(ETL) |
| Attenuation dB/100 feet (nominal reference values) | • 8.0 dB@ 450 MHz<br>• 12.5 dB @900 MHz<br>• 19.6 dB@ I.8 GHz<br>• 23.6 dB @ 2.5 GHz<br>• 23.0 dB @ 3.0 GHz<br>• 27.5 dB @ 4.0 GHz<br>• 31.0 dB @ 5.0 GHz<br>• 35.0 dB @ 6.0 GHz |
| Installation temperature | -20°C (-4°F) to +65°C (149°F) |
| Operating temperature | -30°C (-22°F) to +65°C (149°F) |
| CC pullout | 6 pound-force minimum, 16 pound-force maximum |

| Coaxial cable specification | |
|---|---|
| Jacket pullout | 4.5 pound-force minimum on 76.2 mm (3 in) section at 12.7 mm (0.5 in) per minute |
| Minimum bend radius | 12.7 mm (0.5 in) static bend |
| Leakage | -90 dB |

# Communications—WWAN antenna

| General specifications | | | | | | | | | |
|---|---|---|---|---|---|---|---|---|---|
| Antenna type | PCB Dipole | | | | | | | | |
| Number of ports | 2 | | | | | | | | |
| Frequency (MHz) | 698-803 | 791-862 | 824-894 | 880-960 | 1710- 1880 | 1850- 1990 | 1710- 2155 | 1920- 2170 | 2500-2690 |
| VSWR | 2:1 | | | | | | | | |
| Isolation (dB) | > 15 | | | | | | | | |
| Peak gain | < 5.0dBi | < 5.0dBi | <5.0dBi | < 3.7dBi | < 5.0dBi | < 3.3dBi | <3.3dBi | < 5.0dBi | < 5.0dBi |
| Average gain on sphere (3D) | > -3 dBi | | | | | | | | |
| Polarization | Linear | | | | | | | | |
| Efficiency | > 40% | | | | | | | | |

| Mechanical and environmental specifications | |
|---|---|
| Height | 254 mm (10 in) |
| Diameter | 41 mm (1.61 in) |
| Weight | 820 g (with mounting holder) |
| IPX class | IP65 |
| Mounting | Wall mounted |
| Connector type | SMA male |
| Antenna color | White |
| Cable type | Plenum rated low loss RG58 |
| Cable color | White |

| Mechanical and environmental specifications | |
|---|---|
| Mounting bracket | Swivel type (plastic) |
| Mounting bracket length (approximate) | 175 mm (6.89 in) |
| Mounting bracket color | Black |
| Pig tail length | 1000 mm (39.37 in) |

| Coaxial cable specification | |
|---|---|
| Impedance | 50 ± 2.0 ohms |
| Structural return loss | -16 dB or better from 100-2500 MHZ un-terminated sample (direct bridge method) |
| Nominal RTL reference | -16 dB or better to 6.0 GHz |
| Dielectric | Foam FEP |
| Dielectric (outer diameter) | 2.79 mm ± 0.076 mm (0.110 in ± 0.003 in) |
| Velocity of propagation | 80% |
| Center conductor | Solid copper, 0.94 mm ± 0.025 mm (0.037 in ± 0.001 in) |
| Shield #1 | Foil, aluminium/poly tape, adhered to dielectric |
| Diameter over foil | 3.02 mm ± 0.07 mm (0.119 in ± 0.003 in) |
| Shield #2 | Braid, 90% 36-AWG tin/copper |
| Outer jacket | Plenum PVDF, off-white, lead-free, and UV stable |
| Outer diameter | 4.52 mm ± 0.15 mm (0.178 in ± 0.006 in) |
| Outer Jacket | Plenum PVDF, Off-white, lead free, and UV stable |
| Outer Diameter | 4.52 mm ± 0.15 mm (0.178 in ± 0.006 in) |
| PLENUM rating | CMP(ETL)C(ETL) |
| Attenuation dB/100 feet (nominal reference values) | • 8.0 dB@ 450 MHz<br>• 12.5 dB @900 MHz<br>• 19.6 dB@ l.8 GHz<br>• 23.6 dB @ 2.5 GHz<br>• 23.0 dB @ 3.0 GHz<br>• 27.5 dB @ 4.0 GHz<br>• 31.0 dB @ 5.0 GHz<br>• 35.0 dB @ 6.0 GHz |
| Installation temperature | -20°C (-4°F) to +65°C (149°F) |
| Operating temperature | -30°C (-22°F) to +65°C (149°F) |
| CC pullout | 6 pound-force minimum, 16 pound-force maximum |
| Jacket pullout | 4.5 pound-force minimum on 76.2 mm (3 in) section at 12.7 mm (0.5 in) per minute |
| Minimum bend radius | 12.7 mm (0.5 in) static bend |
| Leakage | -90 dB |

| Measured antenna peak gain (antenna only) | | | | |
|---|---|---|---|---|
| | Main antenna | | Auxiliary antenna | |
| Frequency (MHz) | Horizontal (dBi) | Vertical (dBi) | Horizontal (dBi) | Vertical (dBi) |
| 698 | 0.09 | 0.63 | 1.19 | 1.12 |
| 704 | -0.11 | 0.66 | 0.89 | 0.91 |
| 710 | -0.27 | 0.60 | 0.51 | 0.78 |
| 716 | -0.08 | 0.55 | 0.42 | 0.86 |
| 734 | 0.17 | 0.57 | 0.68 | 0.97 |
| 740 | 0.35 | 0.60 | 0.86 | 0.99 |
| 746 | 0.38 | 0.92 | 1.00 | 1.03 |
| 734 | 0.49 | 1.12 | 1.16 | 1.10 |
| 740 | 0.67 | 1.42 | 1.39 | 1.11 |
| 746 | 0.95 | 1.56 | 1.51 | 1.20 |
| 756 | 1.48 | 2.10 | 1.63 | 1.53 |
| 765 | 1.81 | 2.42 | 1.64 | 1.63 |
| 772 | 1.93 | 2.47 | 1.40 | 1.57 |
| 777 | 2.00 | 2.50 | 1.33 | 1.60 |
| 782 | 1.85 | 2.36 | 1.02 | 1.48 |
| 787 | 1.67 | 2.25 | 0.73 | 1.43 |
| 791 | 1.62 | 2.21 | 0.90 | 1.37 |
| 806 | 1.69 | 2.34 | 1.68 | 1.61 |
| 821 | 1.70 | 2.02 | 1.97 | 1.91 |
| 824 | 1.63 | 1.93 | 1.91 | 1.91 |
| 836 | 1.65 | 1.65 | 1.80 | 1.71 |
| 849 | 1.63 | 1.46 | 1.79 | 1.40 |
| 862 | 1.65 | 1.34 | 2.01 | 1.19 |
| 869 | 1.60 | 1.26 | 2.07 | 1.04 |
| 880 | 1.72 | 1.24 | 2.16 | 1.09 |
| 894 | 1.69 | 1.06 | 2.15 | 0.96 |

| Measured antenna peak gain (antenna only) | | | | |
|---|---|---|---|---|
| 900 | 1.71 | 1.00 | 2.13 | 0.94 |
| 915 | 1.65 | 1.03 | 1.87 | 0.82 |
| 925 | 1.57 | 1.16 | 1.61 | 0.74 |
| 940 | 1.30 | 1.36 | 1.24 | 0.60 |
| 960 | 1.43 | 1.31 | 0.98 | 0.69 |
| 1710 | 2.19 | 2.18 | 1.83 | 2.39 |
| 1730 | 2.25 | 2.29 | 1.66 | 2.36 |
| 1750 | 1.90 | 2.15 | 1.39 | 2.29 |
| 1770 | 1.33 | 1.91 | 0.97 | 1.83 |
| 1785 | 0.88 | 1.76 | 0.66 | 1.50 |
| 1805 | 0.40 | 1.59 | 0.34 | 1.26 |
| 1840 | -0.12 | 1.49 | -0.01 | 1.18 |
| 1850 | -0.06 | 1.58 | 0.04 | 1.18 |
| 1880 | 0.36 | 1.65 | 0.51 | 1.49 |
| 1910 | 0.72 | 1.76 | 0.90 | 1.81 |
| 1920 | 0.86 | 1.85 | 0.91 | 1.99 |
| 1930 | 1.01 | 1.89 | 0.95 | 2.15 |
| 1950 | 1.29 | 2.16 | 0.99 | 2.28 |
| 1960 | 1.23 | 2.32 | 0.91 | 2.29 |
| 1980 | 0.98 | 2.43 | 0.95 | 2.19 |
| 1995 | 0.35 | 2.22 | 0.74 | 1.80 |
| 2110 | 0.72 | 1.06 | 1.37 | 1.28 |
| 2140 | 0.82 | 1.08 | 1.58 | 1.31 |
| 2170 | 1.15 | 1.22 | 1.85 | 1.18 |
| 2300 | 2.23 | 2.40 | 2.97 | 1.63 |
| 2325 | 1.76 | 2.18 | 2.48 | 1.74 |
| 2350 | 1.44 | 1.74 | 2.08 | 1.66 |
| 2375 | 1.26 | 1.59 | 1.84 | 1.46 |

| Measured antenna peak gain (antenna only) | | | | |
|---|---|---|---|---|
| 2400 | 1.29 | 1.91 | 1.85 | 1.63 |
| 2500 | 3.17 | 2.75 | 2.94 | 2.47 |
| 2515 | 3.11 | 2.62 | 2.78 | 2.47 |
| 2535 | 2.88 | 2.42 | 2.55 | 2.48 |
| 2555 | 2.51 | 2.09 | 2.18 | 2.46 |
| 2570 | 2.21 | 1.91 | 1.92 | 2.46 |
| 2570 | 2.21 | 1.91 | 1.92 | 2.46 |
| 2595 | 1.89 | 1.65 | 1.56 | 2.45 |
| 2620 | 1.69 | 1.68 | 1.44 | 2.35 |
| 2620 | 1.69 | 1.68 | 1.44 | 2.35 |
| 2630 | 1.80 | 1.76 | 1.43 | 2.41 |
| 2655 | 1.78 | 1.82 | 1.63 | 2.60 |
| 2680 | 1.98 | 2.20 | 2.02 | 2.59 |
| 2690 | 2.07 | 2.38 | 2.17 | 2.55 |

## Graphics/video controller

| 5000/5100 |
|---|
| Intel integrated graphics |

## External ports and connectors

**NOTE: For locations of ports and connectors, see system views.**

**NOTE: For RS422 and RS485:**

- Termination is 120-ohms between the members of the differential pair when enabled.
- Bias is 4.7k pull-up (5V) / pull-down (Gnd) when enabled.

| | 5000/5100 |
|---|---|
| RS-232 | 1 |
| RS-485 | 2 |
| RS-422/RS-485 combo (configurable via DIP switches) | 1 |
| Network connector (RJ-45) – Dual gigabit ethernet | 2 |
| HDMI Port 1.4 | 1 |
| Line out for headphones or speakers | None |

| | 5000/5100 |
|---|---|
| Universal audio jack | None |
| USB 2.0 | 2 |
| USB 3.0 | 1 |
| CANBus (3–pin Phoenix connector) | 1 |

# Dimensions and weight

**NOTE: System weight and shipping weight are based on a typical configuration and may vary depending on PC configuration. A typical configuration includes: integrated graphics, one hard drive, and one optical drive.**

## Product dimensions and weight

| | 5000 | 5100 | IO module | Power module | IP65 rugged enclosure |
|---|---|---|---|---|---|
| Volume (Liters) | 3.167 L | 3.675 L | 2.14 L | 1.634 L | 13.62 L |
| Weight | 3.0 kg (6.6 lb) | 3.3 kg (7.3 lb) | 1.2 kg (2.6 lb) | 1.4 kg (3.1 lb) | 6.3 kg (13.9 lb) |
| Height | 228.4 mm (8.99 in) | 228.4 mm (8.99 in) | 207.60 mm (8.17 in) | 117.80 mm (4.64 in) | 388 mm (15.28 in) |
| Width | 216 mm (8.50 in) | 216 mm (8.50 in) | 216 mm (8.50 in) | 216 mm (8.50 in) | 440 mm (17.46 in) |
| Depth | 64.20 mm (2.52 in) | 74.50 mm (2.93 in) | 47.70 mm (1.88 in) | 64.20 mm (2.53 in) | 79.80 mm (3.14 in) |

**NOTE: The dimensions for the enclosure do not include the latches and wall bracket on the back of the enclosure. The wall bracket adds 5 mm (0.04 inches) to the depth.**

## Packaging dimensions and weight

| | 5000 | 5100 | IO Module | Power module | IP65 rugged enclosure |
|---|---|---|---|---|---|
| Height | 34.4 cm (13.56 in) | 34.4 cm (13.56 in) | 25.4 cm (10 in) | 25.4 cm (10 in) | 52.7 cm (20.75 in) |
| Width | 29.5 cm (11.63 in) | 29.5 cm (11.63 in) | 13.2 cm (5.2 in) | 11.4 cm (4.49 in) | 15.9 cm (6.26 in) |
| Depth | 15.6 cm (6.13 in) | 15.6 cm (6.13 in) | 18.1 cm (7.12 in) | 18.1 cm (7.12 in) | 52 cm (20.47 in) |
| Shipping weight (includes packaging materials) | 3.8 kg (8.38 lb) | 3.8 kg (8.38 lb) | 1.48 kg ( 3.26 lb) | 1.63 kg ( 3.59 lb) | 7.79 kg (17.17 lb) |

## Mounting dimensions

| | 5000 | 5100 | IO module | Power module | IP65 rugged enclosure |
|---|---|---|---|---|---|
| Height | 246 mm (9.69 in) | 246 mm (9.69 in) | 246 mm (9.69 in) | 246 mm (9.69 in) | 458.2 mm (18.04 in) |
| Width | 228.4 mm (8.99 in) | 228.4 mm (8.99 in) | 228.2 mm (8.98 in) | 130.8 mm (5.15 in) | 405.6 mm (15.97 in) |

| | 5000 | 5100 | IO module | Power module | IP65 rugged enclosure |
|---|---|---|---|---|---|
| Depth | 72.7 mm (2.86 in) | 83 mm (3.27 in) | 56.2 mm (2.21 in) | 72.7 mm (2.86 in) | 91.8 mm (3.61 in) |

# Environmental and operating conditions

## Environmental conditions—System

| | |
|---|---|
| Ingress protection rating | IP50 |
| Temperature range: | |
| Operating (with a maximum temperature gradation of 15°C per hour) | **Edge Gateway 5000**<br>• -30°C to 50°C (22°F to 158°F) when connected to a 24 V AC/DC power source.<br>• -30°C to 70°C (22°F to 158°F) when connected to a power adapter or battery.<br>**Edge Gateway 5100**<br>• -30°C to 50°C (22°F to 158°F) when connected to a 24 V AC/DC power source.<br>• -30°C to 70°C (22°F to 158°F) when connected to a power adapter or battery.<br>**NOTE: The maximum operating temperature is derated 1°C/305 m (1000 ft) above sea level altitude.** |
| Non-operating (with a maximum temperature gradation of 15°C per hour) | -40°C to 85°C (-40°F to 185 °F) |
| Relative humidity (maximum): | |
| Operating (with maximum humidity gradation of 10% per hour) | 10% to 90% (non-condensing) |
| Non-operating (with maximum humidity gradation of 10% per hour) | 5% to 95% (non-condensing) |
| Altitude (maximum, unpressurized): | |
| Operating | -15.20 m to 5000 m (-50 ft to 16,404 ft)<br>**NOTE: The maximum operating temperature is derated 1°C/305 m (1000 ft) above sea level altitude.** |
| Storage | -15.20 m to 10,668 m (-50 ft to 35,000 ft) |

## Environmental conditions—IO module

| Environmental requirements | |
|---|---|
| Ingress protection rating | IP50 |

| Environmental requirements | |
|---|---|
| | **NOTE: Enclosure meets IP50 with the pre-installed PCIe blank bracket. System IP rating depends on the PCIe card IP rating.** |
| Temperature range: | |
| Operating (with a maximum temperature gradation of 15°C per hour) | -30°C to 70°C (-22°F to 158°F)<br>**NOTE: The maximum operating temperature is derated 1°C/305 m(1000 ft) above sea level altitude.**<br>**NOTE: The enclosure meets this specification without a PCIe card. Operating temperature may change if a PCIe card is installed.**<br>**NOTE: Any component to be installed in the IO module shall have a still air temperature rating that is equal to or higher than the PCIe card temperature rating. For IO modules without PCIe cards, use a system ambient temperature of +3°C (+37.4°F) to determine the inside air temperature.** |
| Non-operating | -40°C to 85°C (-40°F to 185 °F) |
| Relative humidity (maximum): | |
| Operating (with maximum humidity gradation of 10% per hour) | 10% to 90% (non-condensing) |
| Non-operating ((with maximum humidity gradation of 10% per hour) | 5% to 95% (non-condensing) |
| Altitude (maximum, unpressurized): | |
| Operating | -15.2 m to 5000 m (-50 ft to 16,404 ft)<br>**NOTE: The maximum operating temperature is derated 1°C/305 m (1000 ft) above sea level altitude.** |
| Storage | -15.20 m to 10,668 m (-50 ft to 35,000 ft) |

**Supported PCIe card power**—PCIe card temperatures and power ratings must meet following requirements:

| System ambient after altitude derating (°C) | Maximum supported power dissipation (W) for 85°C or above still air rated PCIe cards | Maximum supported power dissipation (W) for 70°C still air rated PCIe cards | Maximum supported power dissipation (W) for 55°C still air rated PCIe cards |
|---|---|---|---|
| 20 | 15 | 12 | 8 |
| 25 | 14 | 10 | 6 |
| 30 | 13 | 9 | 5 |
| 35 | 12 | 8 | 4 |
| 40 | 10 | 6 | 3 |
| 45 | 9 | 5 | 2 |
| 50 | 8 | 4 | 1 |
| 55 | 6 | 3 | Not supported |
| 60 | 5 | 2 | Not supported |
| 65 | 4 | 1 | Not supported |
| 70 | 3 | Not supported | Not supported |

**NOTE: PCIe cards must support still air environment and must not require active cooling.**

**NOTE: PCIe cards rated above 25 W are not supported regardless of temperature rating.**

**NOTE: If a PCIe card is rated at a temperature that is not shown in the table, use interpolation to calculate the maximum supported power.**

**NOTE: If a PCIe card is rated at a temperature greater than 85°C, it shall be treated as an 85°C rated card in determining the supported power.**

## Environmental conditions - Power module

| Environmental requirements | |
|---|---|
| Ingress protection rating | IP50 |
| Temperature range: | |
| Operating (with a maximum temperature gradation of 15°C per hour) | • -30°C to 70°C (-22°F to 158°F) when connected to a 24V AC/DC power source.<br>• 0°C to 40°C (-22°F to 104°F) when connected to a power adapter or battery.<br>**NOTE: The maximum operating temperature is derated 1°C/305m(1000ft) above sea level altitude.** |
| Non-operating | -40°C to 85°C (-40°F to 185 °F) |
| Relative humidity (maximum): | |
| Operating (with maximum humidity gradation of 10% per hour) | 10% to 90% (non-condensing) |
| Non-operating ((with maximum humidity gradation of 10% per hour) | 5% to 95% (non-condensing) |
| Altitude (maximum, unpressurized): | |
| Operating | -15.2m to 5000m (-50ft to 16,404ft) |

| | |
|---|---|
| | **NOTE: The maximum operating temperature is derated 1°C/305m (1000ft) above sea level altitude.** |
| Storage | -15.20 m to 10,668 m (-50 ft to 35,000 ft) |

## Environmental conditions - Enclosure

| | |
|---|---|
| Ingress protection rating | IP65<br>**NOTE: Require IP65 or above conduit connection.** |
| Temperature range: | |
| Operating (with a maximum temperature gradation of 15°C per hour) | • Edge Gateway 5000: 0°C to 45°C (32°F to 113°F)<br>• Edge Gateway 5100: -30°C to 70°C (-22°F to 158°F)<br>**NOTE: The maximum operating temperature is derated 1°C/305 m (1000 ft) above sea level altitude.**<br>**NOTE: The maximum operating temperature is derated 18°C (32.4°F) under direct solar thermal load.** |
| Non-operating (with a maximum temperature gradation of 15°C per hour) | -40°C to 85°C (-40°F to 185 °F) |
| Relative humidity (maximum): | |
| Operating (with maximum humidity gradation of 10% per hour) | 10% to 90% (non-condensing) |
| Non-operating (with maximum humidity gradation of 10% per hour) | 5% to 95% (non-condensing) |
| Altitude (maximum, unpressurized): | |
| Operating | -15.2 m to 5000 m (-50 ft to 16,404 ft)<br>**NOTE: The maximum operating temperature is derated 1°C/305 m (1000 ft) above sea level altitude.** |
| Storage | -15.2 m to 10,668 m (-50 ft to 35,000 ft) |

## Operating conditions

### Maximum vibration

| | 5000 | 5100 |
|---|---|---|
| Operational | 1.54 Grms, 15 min/side | 1.54 Grms, 60 min/side |

### Maximum shock

| | 5000 | 5100 |
|---|---|---|
| Operational | 40G, 2ms | 40G, 2ms |
| Non-operational | 160g, 2ms Half Sine Shock | 160g, 2ms Half Sine Shock |

**Maximum altitude**

| | 5000 | 5100 |
|---|---|---|
| Operational | -15.20 m to 5000 m (-50 ft to 16,404 ft) | -15.20 m to 5000 m (-50 ft to 16,404 ft) |
| Non-operational | –15.2 to 10,668 m (–50 to 35,000 ft) | –15.2 to 10,668 m (–50 to 35,000 ft) |

# Power

## Power adaptor (optional)

| General parameters | |
|---|---|
| Power supply | EPS Level V |
| Wattage | 65 W |
| AC input voltage range | 90-264 Vac |
| AC input current (low AC range/high AC range) | 1.7 A/1.0 A |
| AC input frequency | 47 Hz/63 Hz |
| Average efficiency (ESTAR 5.2 compliant) | 87% |

| DC parameters | |
|---|---|
| +19.5 v output | 19.5 V/ 3.34 A |
| Total power (maximum) | 65 W |
| BTUs/h (based on PSU max wattage) | 222 BTU |

| Power-input tolerances | |
|---|---|
| 24V AC/DC | +10% to -25% (26.4 V to 18 V) |
| Power module—Battery connector | • Charging—Charging shuts down when the battery voltage reaches 14 V.<br>• Powering the system—System will shutdown is the voltage from the battery is below 10 V. |

## 3.0 V CMOS coin-cell battery

| Brand | Type | Voltage | Composition |
|---|---|---|---|
| JHIH HONG | CR2032<br>(for Edge Gateway 5000) | 3 V | Lithium |
| PANASONIC | CR2032<br>(for Edge Gateway 5000) | 3 V | Lithium |
| MITSUBISHI | CR2032 | 3 V | Lithium |

| Brand | Type | Voltage | Composition |
|---|---|---|---|
| | (for Edge Gateway 5000) | | |
| SHUNWO & KTS | CR2032 | 3 V | Lithium |
| | (for Edge Gateway 5000) | | |
| PANASONIC | BR2032 | 3 V | Lithium |
| | (for Edge Gateway 5100) | | |

**NOTE: Dell recommends checking or replacing the coin-cell battery prior to operation if the system has been disconnected from a power source for more than two years.**

# Security

| | 5000/5100 |
|---|---|
| Trusted Platform Module (TPM) | • TPM 1.2<br>• TPM 2.0 (for Windows 10 only) |
| Chassis Intrusion Switch | Available when system is installed in (optional) enclosure. When enclosure door is opened, a message appears in the BIOS during Power-On Self-Test (POST), indicating door is open. A log is also created. |

**NOTE: TPM is not available in all countries. Depending on your country regulations, TPM system boards may be unavailable.**

# Software

| | 5000/5100 |
|---|---|
| Dell Edge Device Manager (systems management) | Optional |

# Environmental

**NOTE: For more details on Dell environmental features, see Dell's Environmental Compliance.**

| | 5000/5100 |
|---|---|
| BFR/PVC-free | No |

# Service and support

**NOTE: For more details on Dell service plans, see Dell service plans**

| | 5000/5100 |
|---|---|
| One year base hardware warranty, with mail-in service | Included |
| Basic extensions up to five years, with mail-in service | Available |

| | 5000/5100 |
|---|---|
| ProSupport extensions up to five years, with next business day on-site service | Available |

**NOTE: For a copy of our guarantees or limited warranties, write to 'Dell USA L.P., Attn: Warranties, One Dell Way, Round Rock, TX 78682'. For more information, visit www.dell.com/warranty.**

**NOTE: Service may be provided by third-party. A technician will be dispatched if necessary following phone-based troubleshooting. Subject to parts availability, geographical restrictions and terms of service contract. Service timing dependent upon time of day call placed to Dell U.S.**

6

# I/O Module Overview

The I/O module allows you to install a PCIe x1 card and adds additional ports to your Dell Edge Gateway.

**NOTE: The power module is required to be installed with the Dell Edge Gateway to enable and use the I/O expansion module.**

## IO module (optional) views

### IO module—Front

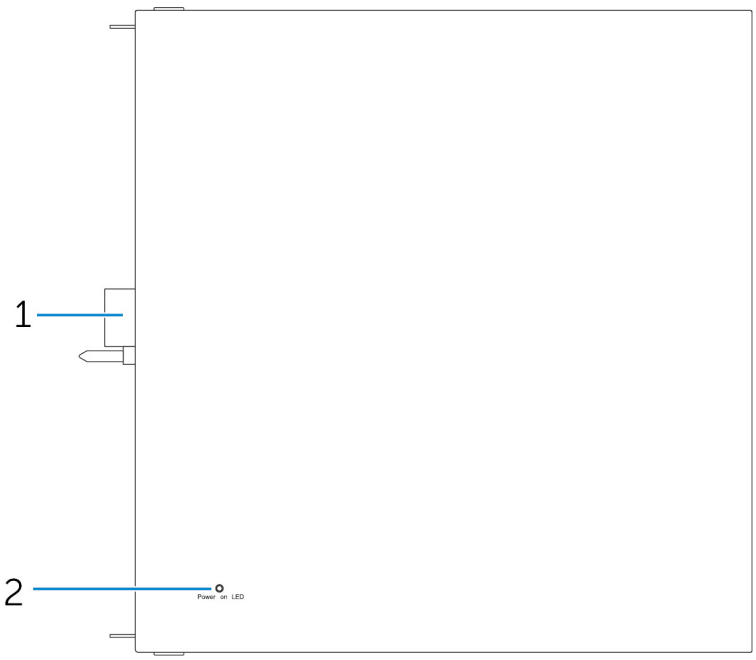


| Features | | |
|---|---|---|
| 1 | IO module expansion connector and guide pin | Connect the IO module to the Edge Gateway. |
| 2 | Power status light | Indicates the power state of the IO module and the Edge Gateway. |

## IO module—Top

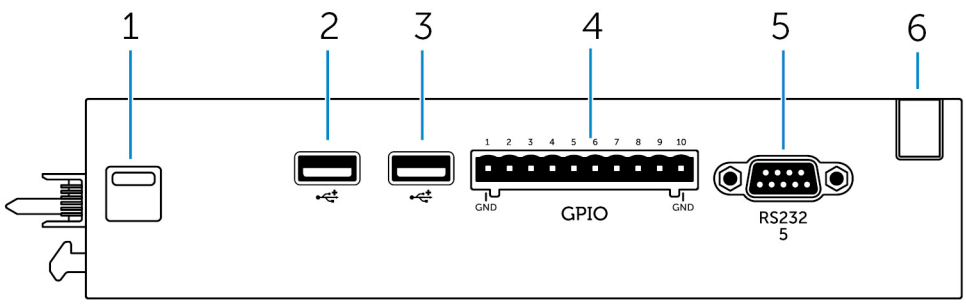


| Features | | |
|---|---|---|
| 1 | Top release latch | Push both the top and bottom release latches to disconnect the power module from the Edge Gateway. |
| 2 | USB 2.0 port | For USB 2.0 devices. |
| 3 | USB 2.0 port | For USB 2.0 devices. |
| 4 | GPIO port | Connect a GPIO 8–pin cable. |
| 5 | RS232 port | Connect an RS232 cable. |
| 6 | Cable routing slot | Route any cable(s) that has to be connected to the PCI card installed in the IO module. |

### GPIO connector mapping

| Pin | Signal | PIC Pin | Full Pin Name |
|---|---|---|---|
| 1 | GND | | |
| 2 | GPIO | 1 | AN22/RPE5/PMD5/RE5 |
| 3 | GPIO | 2 | AN23/PMD6/RE6 |
| 4 | GPIO | 3 | AN27/PMD7/RE7 |
| 5 | GPIO | 4 | AN16/C1IND/RPG6/SCK2/ PMA5/RG6 |
| 6 | GPIO | 5 | AN17/C1INC/RPG7/ PMA4/RG7 |
| 7 | GPIO | 6 | AN18/C2IND/RPG8/ PMA3/RG8 |
| 8 | GPIO | 21 | AN8/RPB8/CTED10/RB8 |
| 9 | GPIO | 22 | AN9/RPB9/CTED4/ PMA7/RB9 |
| 10 | GND | | |

### RS232 port on IO expansion module connector mapping

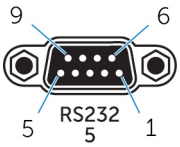


| Pin | Signal | Pin | Signal |
|---|---|---|---|
| 1 | DCD | 6 | DSR |
| 2 | RXD | 7 | RTS |
| 3 | TXD | 8 | CTS |
| 4 | DTR | 9 | RI |
| 5 | GND | | |

## IO module—Bottom

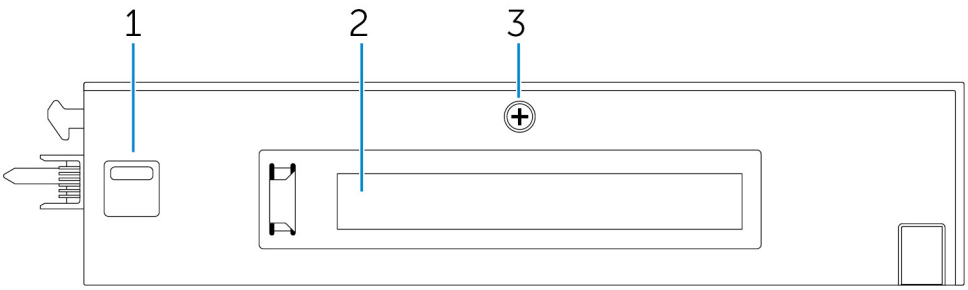


| Features | | |
|---|---|---|
| 1 | Bottom release latch | Push both the top and bottom release latches to disconnect the power module from the Edge Gateway. |
| 2 | PCIe x1 card slot | Install PCIe x1 card on the IO module. |
| 3 | IO module cover removal screw | Remove the screw to open the box and install the PCIe card. |

# Setting up the IO module

**CAUTION: Before touching anything inside the system, ground yourself by touching an unpainted metal surface. While you work, periodically touch an unpainted metal surface to dissipate static electricity, which could harm internal components.**

**NOTE: Install the PCIe expansion card in the IO expansion module before mounting it on wall mount or DIN rail.**

1. Install the PCIe expansion card in the IO expansion module—optional.
   For more information, see Installing the PCIe card into the IO module.
2. Attach either wall-mount brackets or a DIN rail mount to the power module as needed.
3. Remove the screw and the dust cap covering the power module expansion port on the Edge Gateway connector.

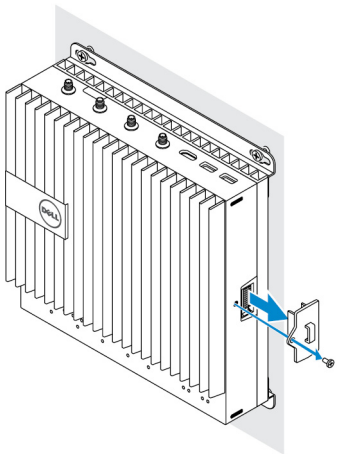

4. Align the power module guide pins to the power module port on the Edge Gateway and slide the power module toward the Edge Gateway until fully seated.

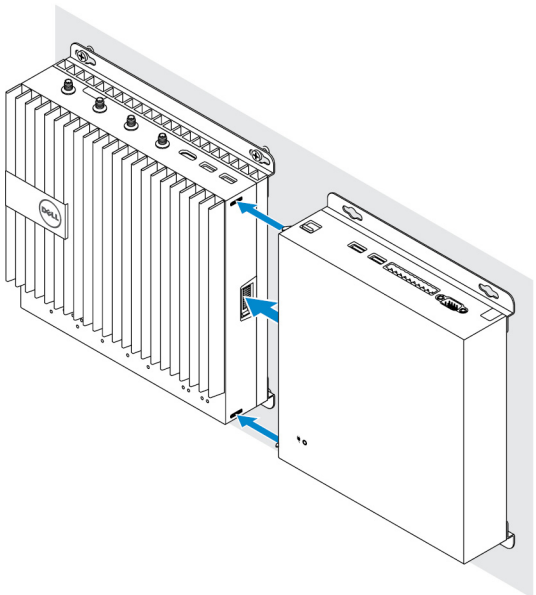

5. Ensure the top and bottom latches are locked to secure the module to the Edge Gateway.

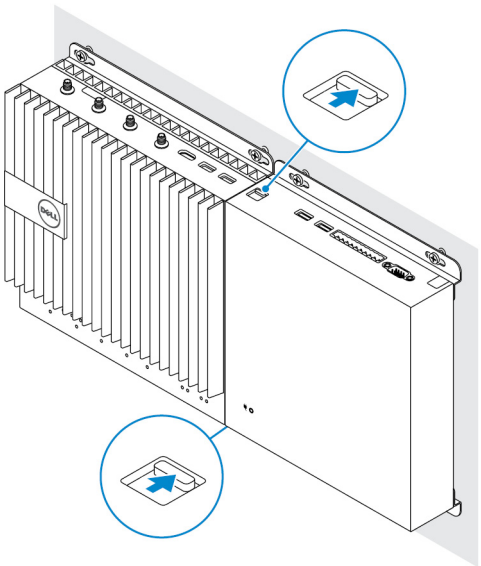

6. Install the Edge Gateway and the IO module along with the power module at a desired location using a wall-mount bracket or the DIN rail mount.

**Wall mount bracket**

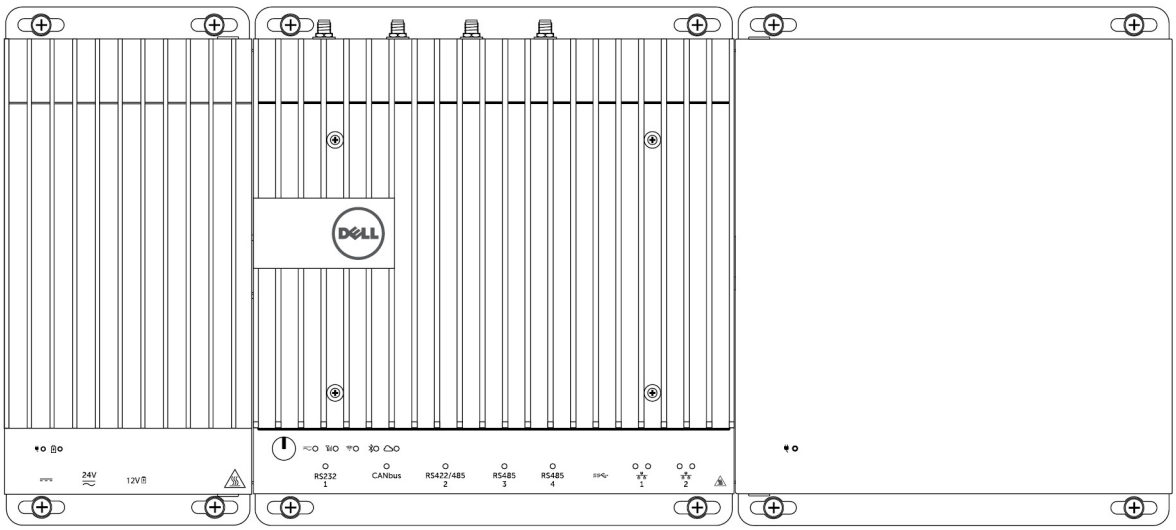


**DIN rail mount**

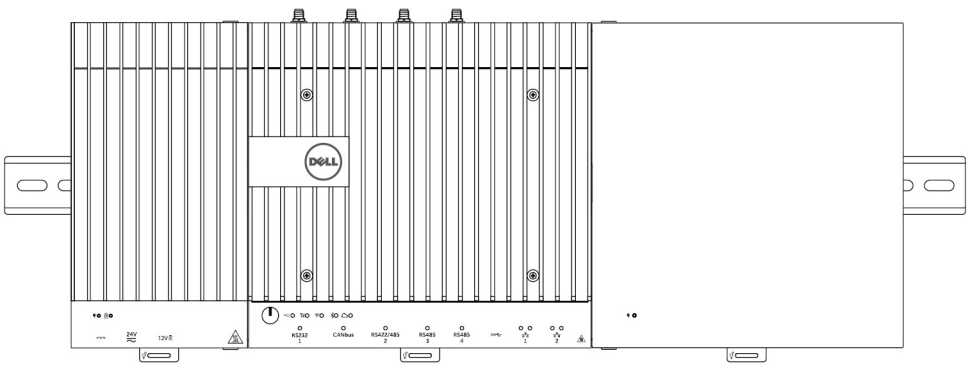

7. Connect to a power source, and press the power button.

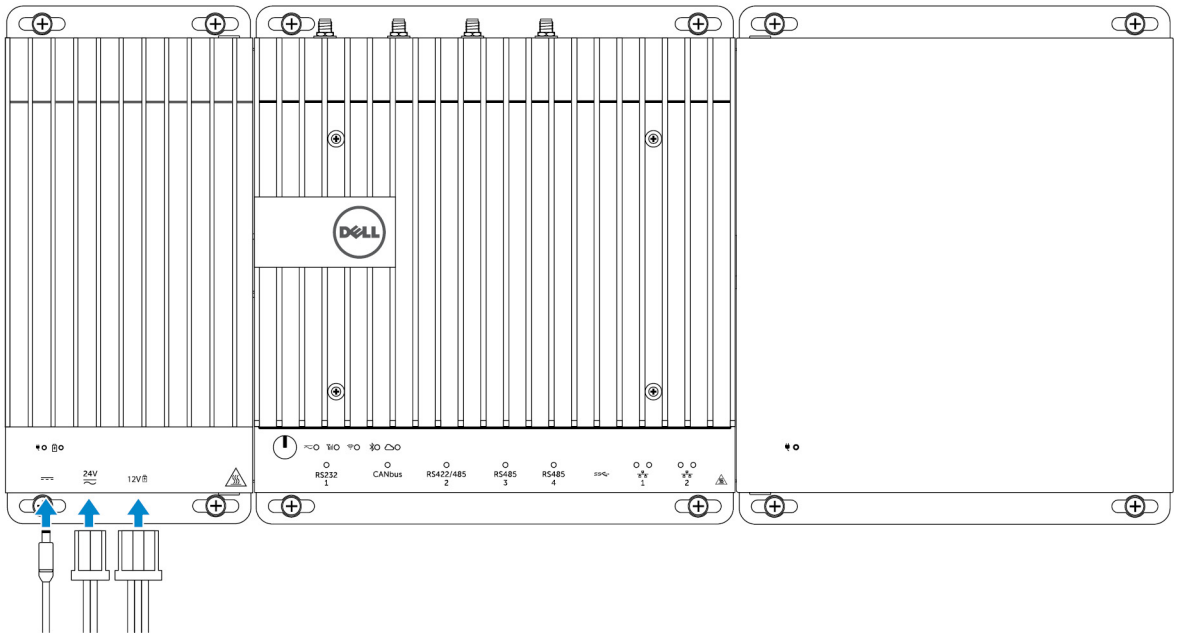


NOTE: Connect a power cable to the 24 V AC/DC or 19.5 V DC power adapter port on the power module.

NOTE: The power adapter and sealed lead-acid battery is sold separately.

NOTE: To enable and use the IO expansion module, you must also install the power module.

## Installing the PCIe card into the IO module

CAUTION: Electrical and electronic devices are sensitive to electrostatic discharge (ESD). Exposure to ESD can harm your device and potentially cause it not to function properly. Ensure that you are properly grounded before handling the mobile broadband card.

NOTE: Install the PCIe expansion card in the IO expansion module before mounting it on a wall mount or DIN rail.

1. Open the IO module.
   a. Remove the dust caps and loosen the access cover screw that secures the IO expansion module to the cover.
   b. Slide the module in the direction shown, and then carefully lift the top cover from the module.

   CAUTION: Remove the cover carefully to avoid damaging the LED light cable, which is mounted on the bottom of the cover.

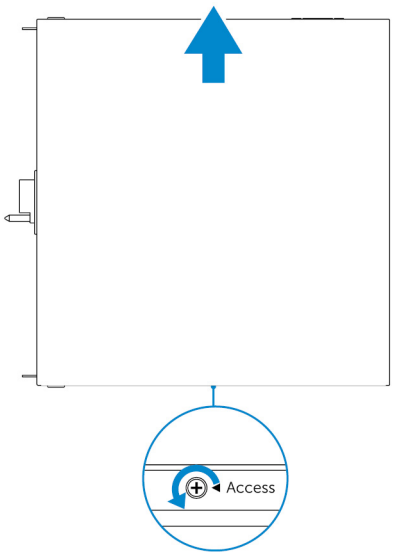


2. Remove the PCIe expansion card-slot cover.

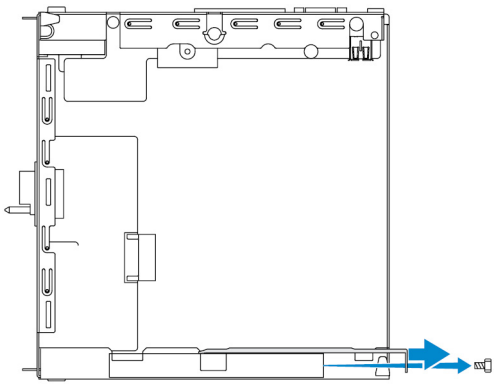

3. Install the PCIe card into the PCIe expansion card slot on the IO expansion module and secure with a screw.

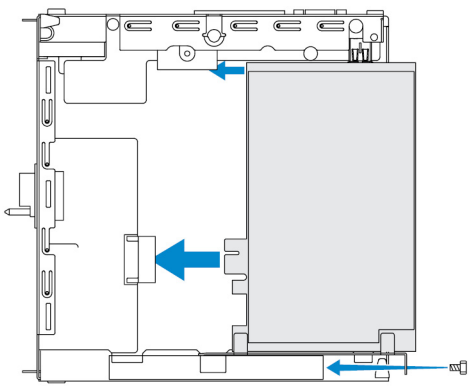

4. Replace the cover on the IO expansion module.

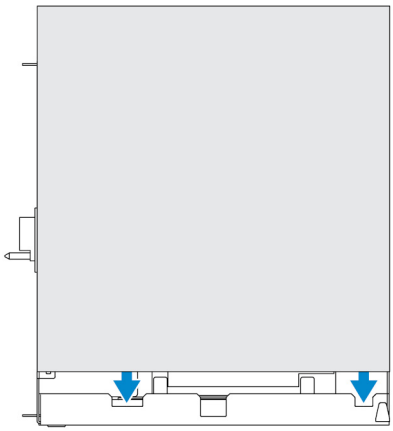

5. Tighten the screw that secures the cover to the IO expansion module.

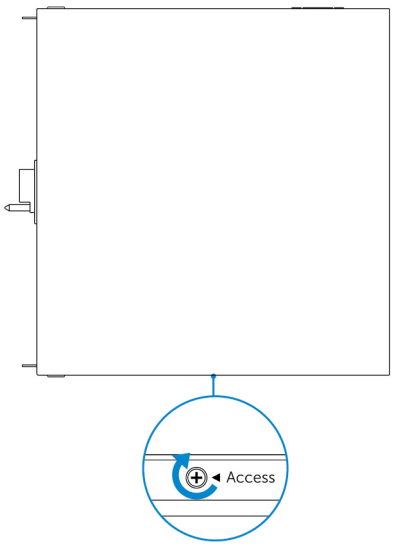


NOTE: Replace the dust caps on any unused ports and connectors.

7

# Power Module Overview

The power module allows you to connect additional power sources to your Dell Edge Gateway. The power module allows you to connect to all three power sources, that is, the 24V AC/DC, 19.5 VDC, and a battery.

**NOTE: The Power Module is required to be installed with the Dell Edge Gateway to enable and use the I/O expansion module.**

## Power module (optional) views

## Power module—Front

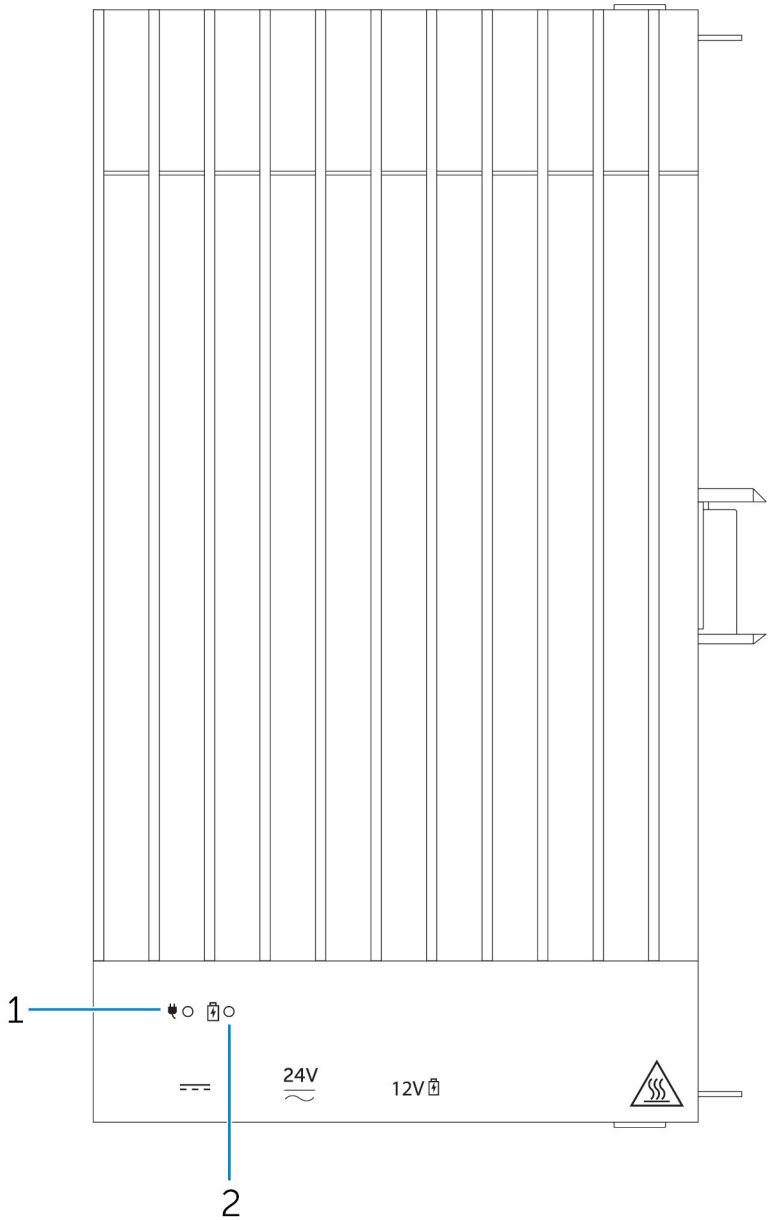


| Features | | |
|---|---|---|
| 1 | Power status LED | Indicates the power-state of the power module and the Edge Gateway. |
| 2 | Battery status LED | Indicates the power-state of the attached battery. |

## Power module—Bottom

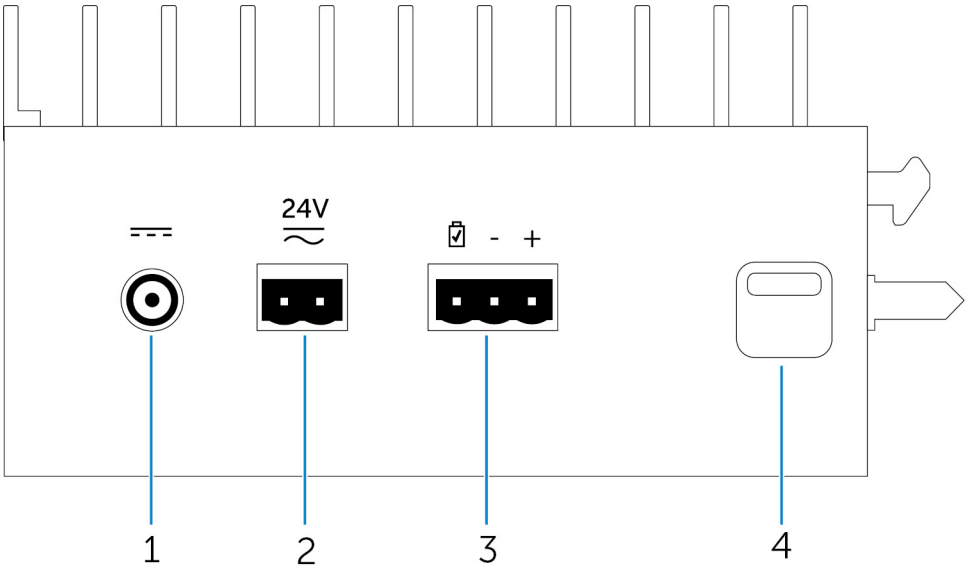


| Features | | |
|---|---|---|
| 1 | 19.5 V DC power adapter port | Connect a 19.5 V DC power adapter to provide power to your Edge Gateway. |
| 2 | 24 V AC/DC power port | Connect a 24 V AC/DC power source to power your Edge Gateway. |
| 3 | Sealed lead-acid battery port | Connect an external battery to the power module to provide back-up power in case of power interruption. |
| 4 | Bottom release-latch | Push both the top and bottom release-latches to disconnect the power module from the Edge Gateway. |

### 19.5 V DC power adapter port

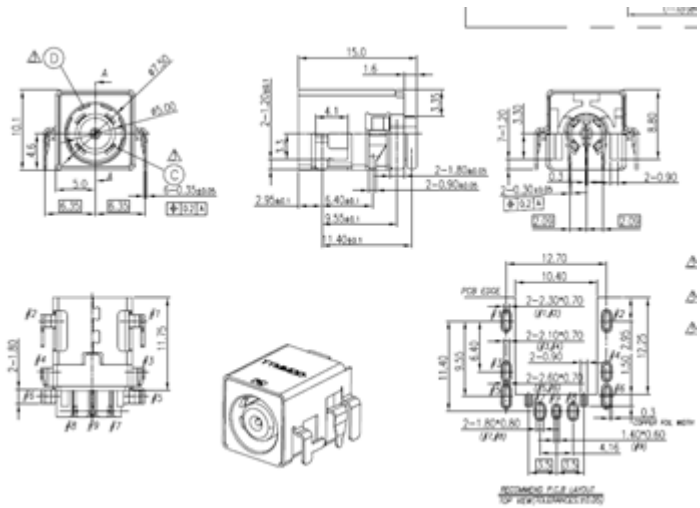

### 24 V AC/DC power port

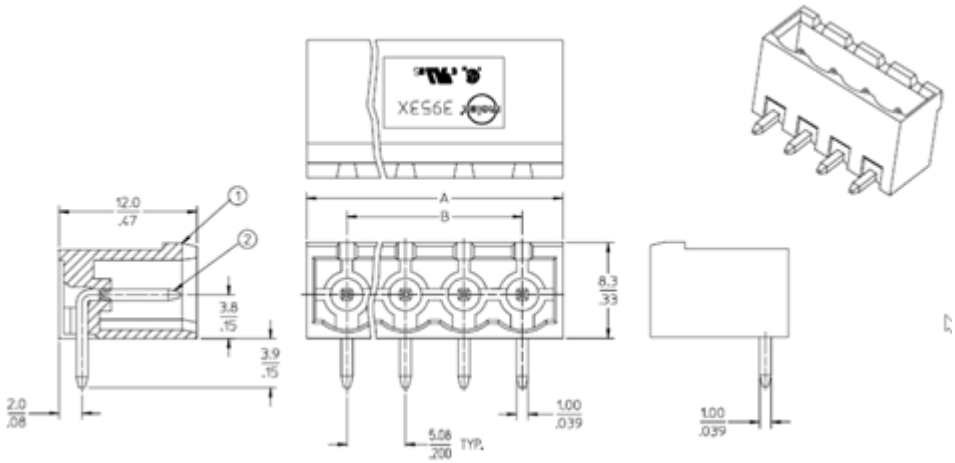


### Sealed lead-acid battery port

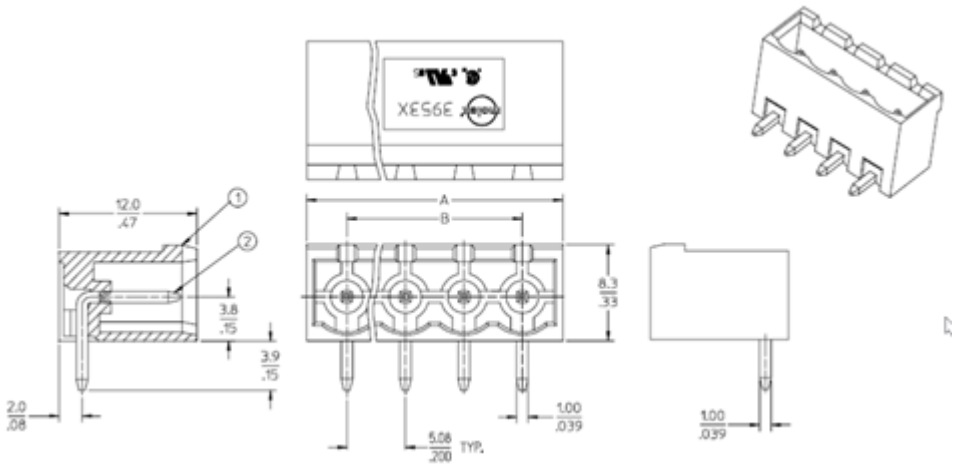

## Power module—Top

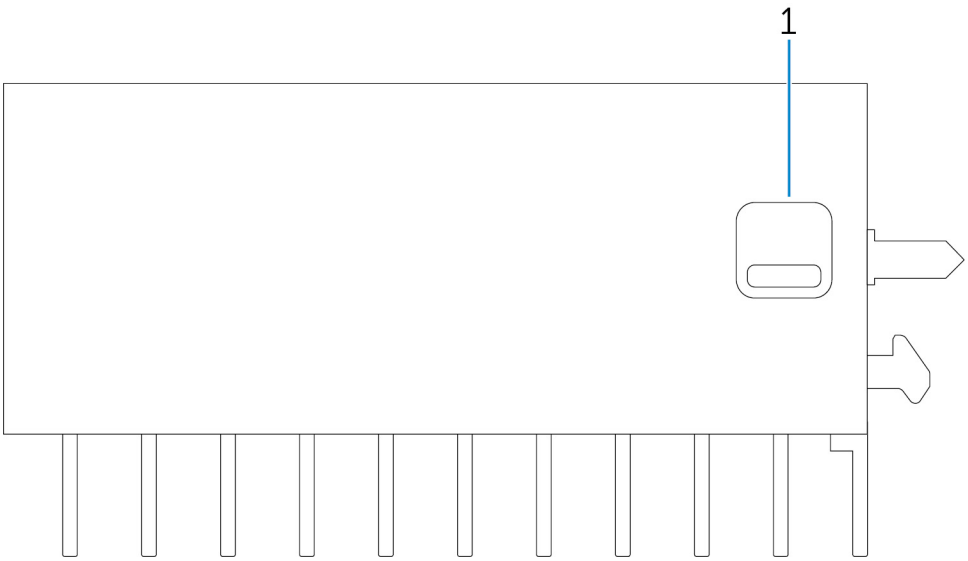


| Features | | |
|---|---|---|
| 1 | Top release latch | Push both the top and bottom release latches to disconnect the power module from the Edge Gateway. |

### Power module—Right

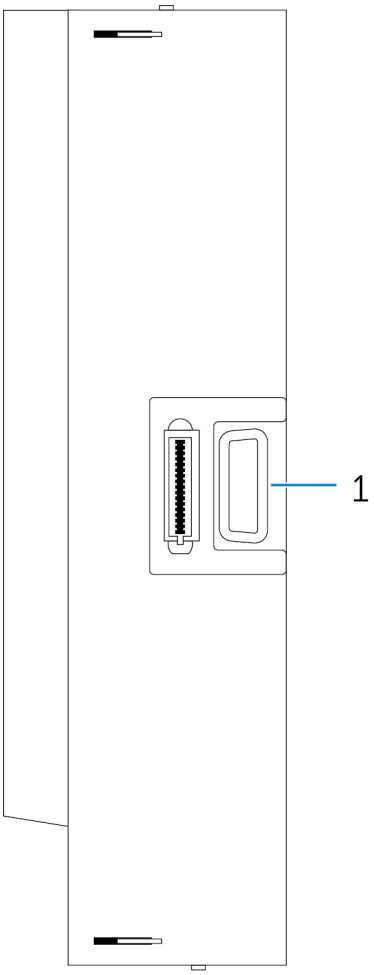


| Features | | |
|---|---|---|
| 1 | Edge Gateway expansion port | Connect the power module to the Edge Gateway for increased power options and to power the IO expansion module. |

## Setting up the power module

**WARNING: Before installing the power module, shut down the Edge Gateway and disconnect the power cable.**

**NOTE: To enable and use the IO expansion module, you must also install the power module.**

1. Attach either wall-mount brackets or a DIN rail mounts to the power module as needed.
2. Remove the screw and the dust-cap covering the power module expansion port on the Edge Gateway connector.

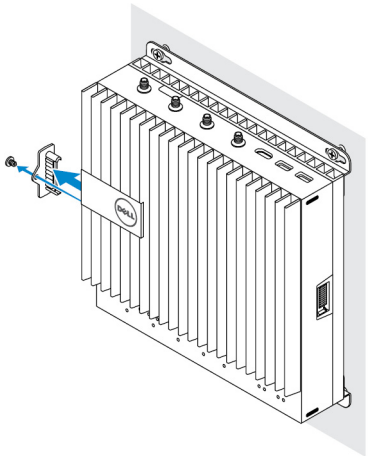

3. Align the power module guide pins to the power module port on the Edge Gateway and slide the power module until fully seated.

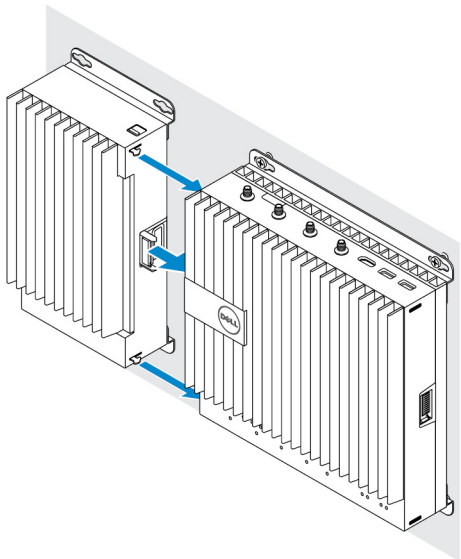

4. Ensure the top and bottom latches are locked to secure the module to the Edge Gateway.

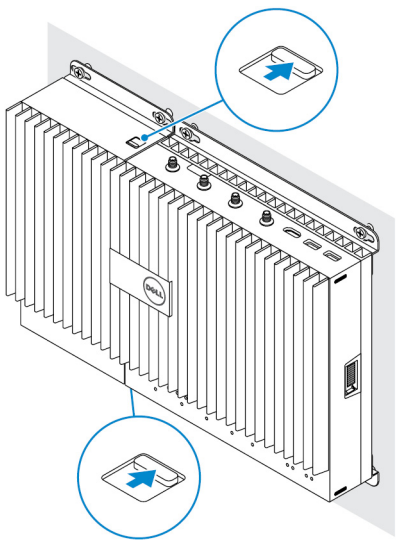

5. Secure the power module to the wall or to the DIN rail.

**Wall mount bracket**

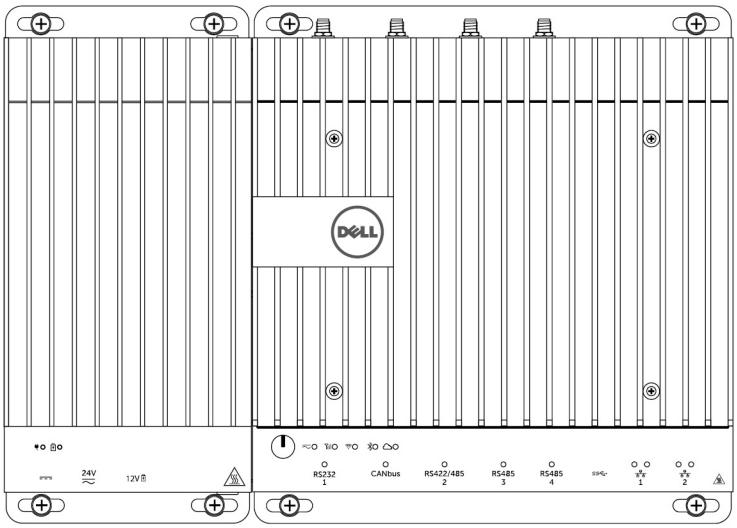


**DIN rail**

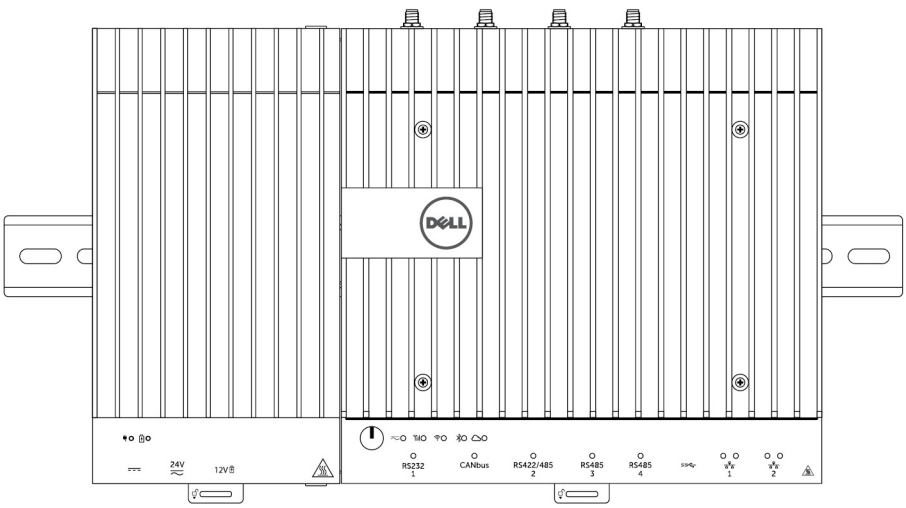


6. Connect the power sources and press the power button on the Edge Gateway.

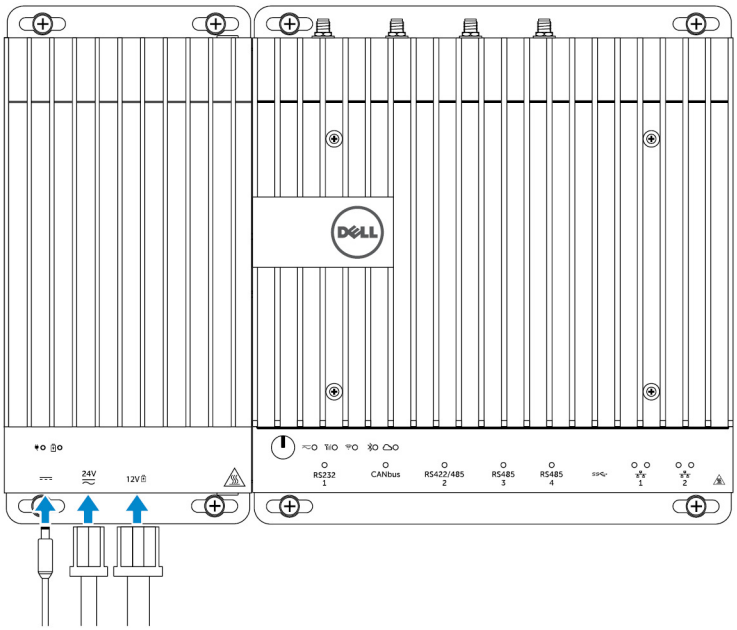


NOTE: You can connect the power cable to the 24V AC/DC, 19 VDC, and a battery simultaneously.

NOTE: The power adapter and sealed lead-acid battery are sold separately.

NOTE: Installing the battery is optional. Dell recommends that you connect a sealed 12V lead-acid battery to the power module.

NOTE: The 12V lead-acid battery is not sold by Dell.

# Specifications - Power Module

| Dimensions | |
|---|---|
| Height | 117.80 mm (4.64 inches) |
| Width | 216 mm (8.50 inches) |
| Depth | 64.20 mm (2.53 inches) |

| Power requirements | |
|---|---|
| Terminal block connector input voltage/current | 24 VAC (50 Hz–60 Hz) or 24 VDC / 15A |
| Power adapter input voltage/current | 19.5 VDC / 6.67A |
| Battery connector port | 12VDC / 15A |

| Environmental requirements | |
|---|---|
| Ingress Protection Rating | IP50 |
| Temperature range: | |
| Operating (with a maximum temperature gradation of 15°C per hour) | • -30°C to 70°C (-22°F to 158°F) when connected to a 24V AC/DC power source.<br>• -30°C to 40°C (-22°F to 104°F) when connected to a power adapter or battery. |

| Environmental requirements | |
|---|---|
| | **NOTE: The maximum operating temperature is derated 1°C/305m(1000ft) above sea level altitude.** |
| Non-operating | -40°C to 70 °C (-40°F to 158°F) |
| Relative humidity (maximum): | |
| Operating (with maximum humidity gradation of 10% per hour) | 10% to 90% (non-condensing) |
| Non-operating ((with maximum humidity gradation of 10% per hour) | 5% to 95% (non-condensing) |
| Altitude (maximum, unpressurized): | |
| Operating | -15.2m to 5000m (-50ft to 16,404ft) |
| | **NOTE: The maximum operating temperature is derated 1°C/305m (1000ft) above sea level altitude.** |
| Storage | -15.20 m to 10,668 m (-50 ft to 35,000 ft) |

8

# Enclosure Overview

The rugged enclosure allows you to install the Dell Edge Gateway in harsh environment's, like locations that are subjected to high temperature variation, dust particle, and humidity.

## Enclosure (optional) view

### Enclosure - Side

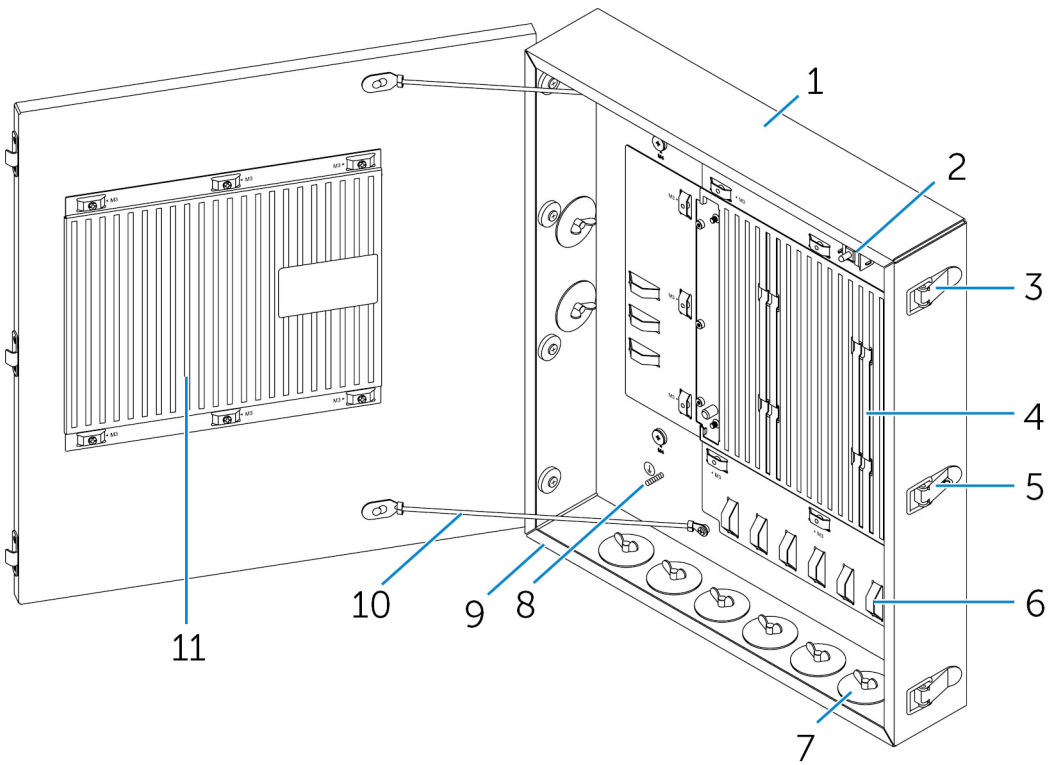


| Features | | |
|---|---|---|
| 1 | Rugged enclosure | Install the Edge Gateway in the rugged enclosure when using in harsh environments condition. |
| 2 | Intrusion detection switch | Detects unauthorized system access. |
| 3 | Door securing latch (3) | Secure the enclosure. |
| 4 | Thermal ribs | Dissipates the heat generated by the system. |
| 5 | Latch lock-out | Secure the system with a padlock. |

| Features | | |
|---|---|---|
| 6 | Cable tie-off (17) | To prevent accidental cable disconnection, tie all cables to the cable tie-off guides. |
| 7 | Cable conduit openings (8) | Route the cables through the conduits (1 inch and 0.75 inch diameter). |
| 8 | Primary ground (internal) | Connect the grounding cable to the system. |
| 9 | Primary ground (external) | Connect the grounding cable to the system. |
| 10 | Door-stop cables (2) | Restricts the door from opening. |
| 11 | Door thermal ribs | Dissipates the heat generated by the system. |

# Setting up the enclosure

1. Install the enclosure's wall-mount bracket at a desired location and secure it to the wall using the wall-mount screws.

   **NOTE: Ensure that the notch on the bracket is on the top.**

   **NOTE: The wall-mount screws are not included with the enclosure.**

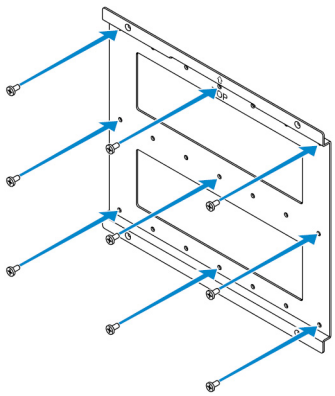

2. Open the enclosure.

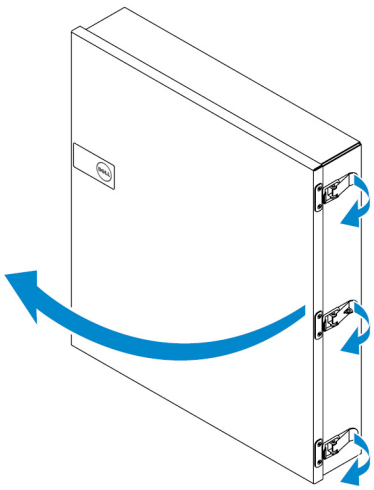

3. Place the enclosure on the wall-mount bracket, and align the tab on the back of the enclosure so that it fits into the notch on the wall bracket.

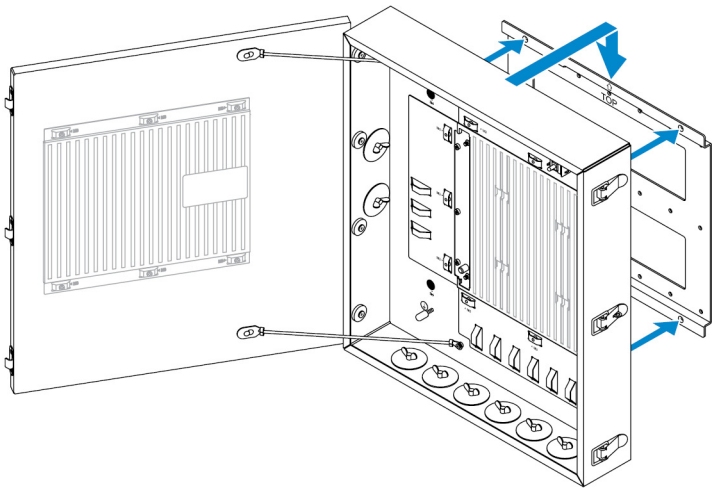

4. Secure the enclosure to the wall bracket by using the rubber washers and screws.

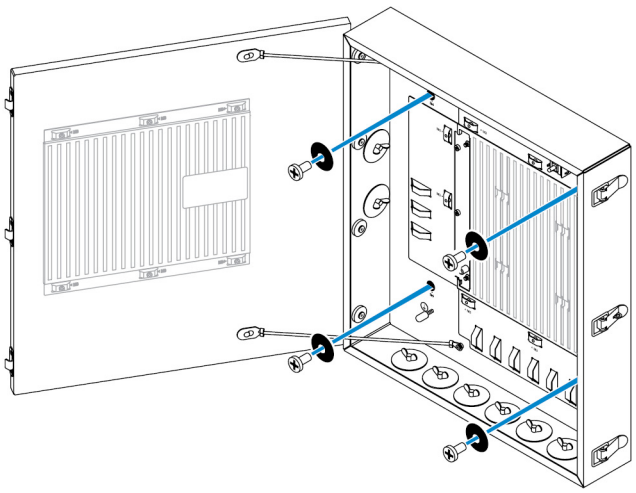

5. Secure the enclosure mounting brackets to the Edge Gateway by using the screws.

**NOTE: Before attaching the brackets to the Edge Gateway, note the correct orientation of the brackets.**

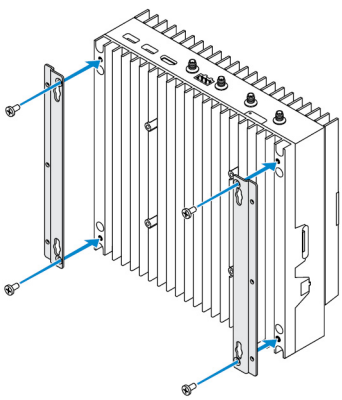

6. Position the Edge Gateway onto the enclosure's two locator pins, and then place and tighten the screws to secure the Edge Gateway to the enclosure.

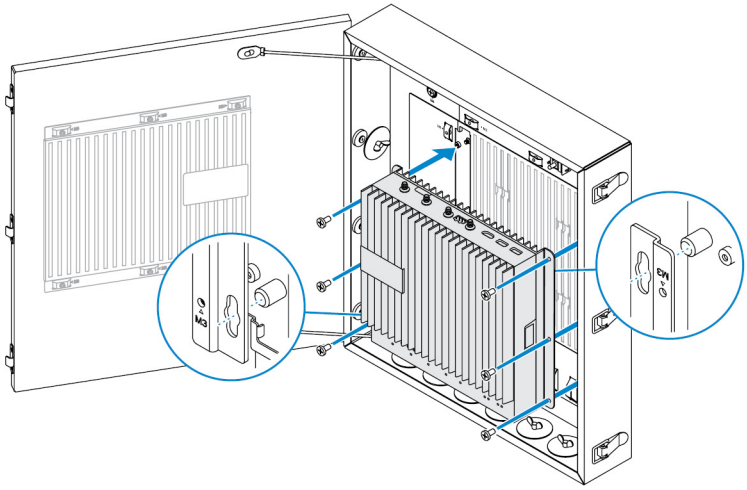

7. Connect the intrusion switch to the system.

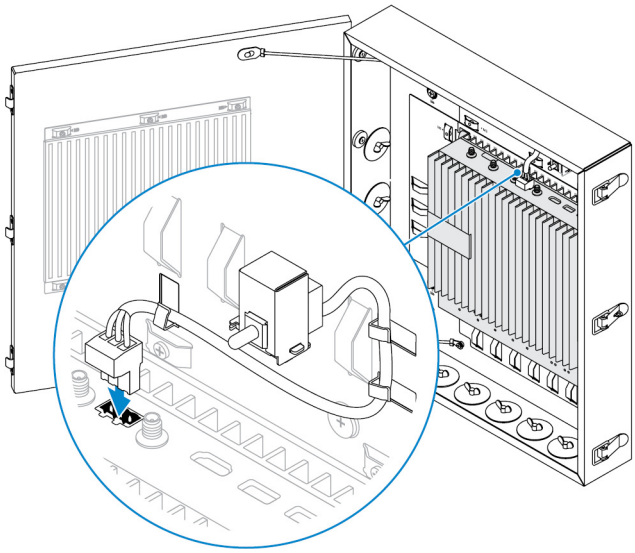

8. Remove the desired conduit plugs on the bottom or the left side of the enclosure and install the wiring conduits.

**NOTE: To ensure that dust and water does not enter the enclosure, install a conduit rated as IP65.**

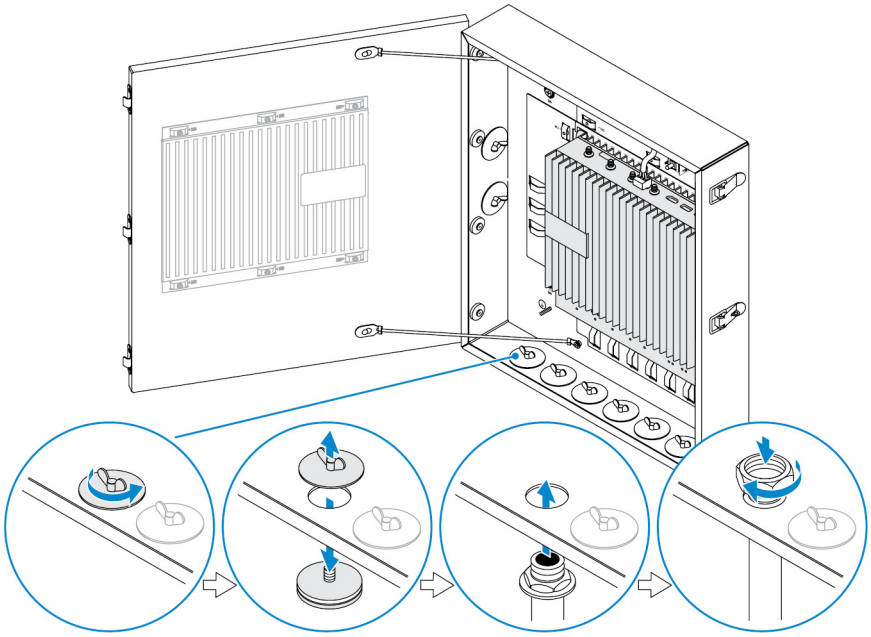

9. Route the cables through the conduits and connect the cables to the desired connectors.

**NOTE: To reduce the risk of accidental cable disconnection, tie all cables to the cable tie-off guides.**

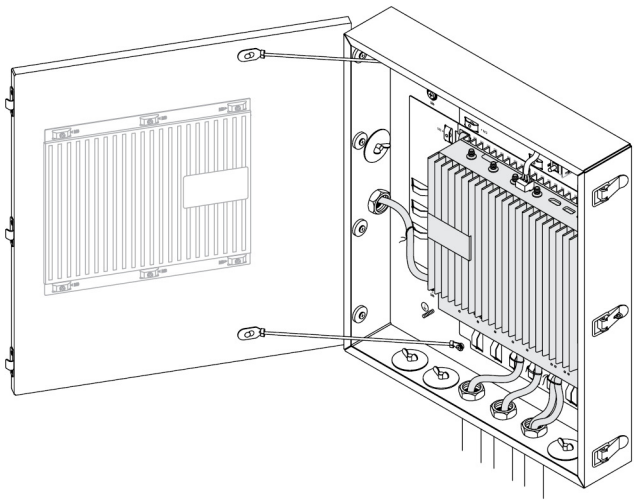

10. Close and securely latch the enclosure door.

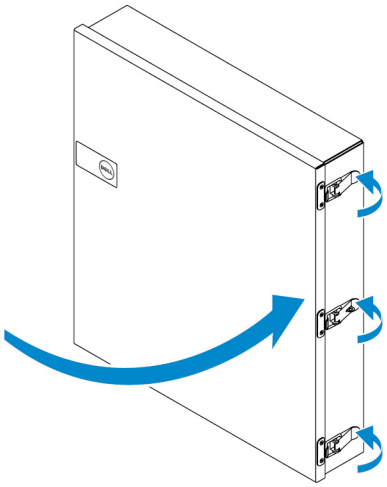

9

# Setting up the ZigBee dongle

**CAUTION: Do not connect the ZigBee dongle if the Edge Gateway is installed inside the enclosure.**

**NOTE: Do not connect the ZigBee dongle to the internal USB port of the IO expansion module.**

1. Shut down your Edge Gateway.
2. Connect the ZigBee dongle to any external USB port on your Edge Gateway.

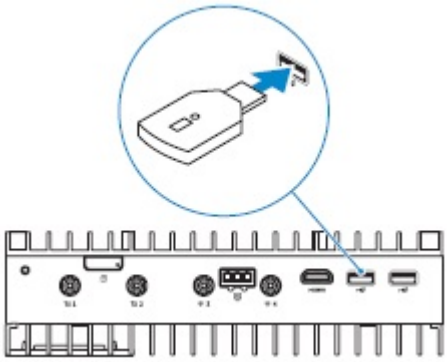

or

Connect the ZigBee dongle to any external USB port on the IO module.

**NOTE: Do not connect the ZigBee dongle to the internal USB port of the IO expansion module.**

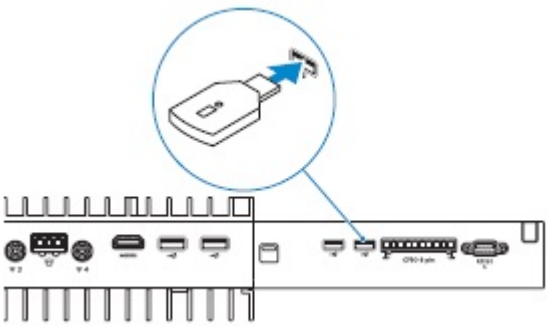

3. Turn on the Edge Gateway and complete the setup.

**NOTE: For ZigBee development information, see www.silabs.com/.**

10

# BIOS defaults

## System configuration

| | 5000 | 5100 |
|---|---|---|
| Integrated NIC | Enable w/PXE | Enable w/PXE |
| Serial port | Disable | Disable |
| SATA operation | AHCI | AHCI |
| Drives | Enable (SSD-1) | Enable (SSD-1) |
| SMART reporting | Disable | Disable |
| USB configuration | Enable (boot support, front USB ports, rear USB ports) | Enable (boot support, front USB ports, rear USB ports) |

## Performance

| | 5000 | 5100 |
|---|---|---|
| Multiple core support | All | All |
| Intel SpeedStep | Enable | Enable |
| C states control | Enable | Enable |
| Limit CPUID value | Disable | Disable |
| Intel TurboBoost | Enable | Enable |
| Rapid Start Technology | Enable | Enable |
| HyperThread control | Enable | Enable |

## Security

| | 5000 | 5100 |
|---|---|---|
| Internal HDD password | Not set | Not set |
| Strong password | Disable | Disable |
| Password configuration | 4~32 | 4~32 |

| | 5000 | 5100 |
|---|---|---|
| Password bypass | Disable | Disable |
| Password changes | Enable | Enable |
| TPM security | Enabled | Enabled |
| Computrace® | Deactivate | Deactivate |
| Chassis intrusion | On (Silent) | On (Silent) |
| CPU XD support | Enable | Enable |
| Admin setup lockout | Disable | Disable |
| OROM keyboard access | Enable | Enable |
| HDD protection support | Disable | Disable |

## Power management

| | 5000 | 5100 |
|---|---|---|
| AC recovery | Power off | Power off |
| Auto on time | Disable | Disable |
| Fan control override | Disable | Disable |
| USB wake support | Enable USB wake support From power off (S5) state | Enable USB wake support from power off (S5) state |
| Wake on LAN/WLAN | Disable: Turns the system on from hibernation (S4) and power off (S5) state | Disable: Turns the system on from hibernation (S4) and power off (S5) state |
| Block sleep | Disable | Disable |
| Intel ready mode | Disable | Disable |

**NOTE: With USB wake support from power off (S5), a wired keyboard or mouse is able to wake the system if connected to the designated USB port (marked with the Smart Power On icon). For wireless keyboard and mice, if both devices share the same USB dongle and the dongle is inserted into the designated USB port, both keyboard and mouse can wake the system. For wireless keyboard only or mouse only, either can wake the system as long as the dongle is inserted into the designated USB port.**

## Maintenance

| | 5000 | 5100 |
|---|---|---|
| Service tag | Set by the factory | Set by the factory |
| Asset tag | Optional user entry | Optional user entry |
| SERR message | Enable | Enable |

## POST behavior

| | 5000 | 5100 |
|---|---|---|
| Numlock LED | Enable | Enable |
| Keyboard errors | Enable | Enable |
| Adaptor warning | N/A | Enable |

## Cloud desktop

| | 5000 | 5100 |
|---|---|---|
| Server lookup method | DNS | DNS |
| Server name | CDServer | CDServer |
| Server IP address | 255.255.255.255 | 255.255.255.255 |
| Server port | 06910 | 06910 |
| Client address method | DHCP | DHCP |
| Client IP address | 255.255.255.255 | 255.255.255.255 |
| Client subnet mask | 255.255.255.255 | 255.255.255.255 |
| Client gateway | 255.255.255.255 | 255.255.255.255 |
| DNS IP address | 255.255.255.255 | 255.255.255.255 |
| Advanced | Disable | Disable |

## Wireless

| | 5000 | 5100 |
|---|---|---|
| Wireless device enable | Enable (WLAN/WWAN/Bluetooth) | Enable (WLAN/WWAN/Bluetooth) |

11

# Other documents you may need

Besides this *Installation and Operations Manual*, you may need to see the following guides available at **https://www.dell.com/support/manuals**.

- *Dell Edge Device Manager Getting Started Guide*
- *Dell SupportAssist For Dell OpenManage Essentials Quick Start Guide*
- *Dell Command | Monitor User's Guide*

Additionally, for more information on using **Dell Data Protection | Encryption** see the documentation for the software at **https://www.dell.com/support/manuals**.

12

# Contacting Dell

To contact Dell for sales, technical assistance, or customer service issues:

1. Go to www.dell.com/contactdell.
2. Verify your country or region in the drop-down list at the bottom of the page.
3. Select the appropriate service or support link based on your requirement or choose the method of contacting Dell that is convenient for you.

   Dell provides several online and telephone-based support and service options. Availability varies by country and product, and some services may not be available in your area.

   **NOTE: If you do not have an active internet connection, you can find the contact information on your purchase invoice, packing slip, bill, or Dell product catalog.**

## Regulatory and environmental compliance

Product-related conformity assessment and regulatory authorizations including Product Safety, Electromagnetic Compatibility (EMC), Ergonomics, and Communication Devices relevant to this product, as well as the Data Sheet for this product, are available at dell.com/regulatory_compliance.

Details of Dell's environmental stewardship program to conserve product energy consumption, reduce or eliminate materials for disposal, prolong product life span and provide effective and convenient equipment recovery solutions may be viewed at www.dell.com/environment. Product-related conformity assessment, regulatory authorizations, and information encompassing Environmental, Energy Consumption, Noise Emissions, Product Materials Information, Packaging, Batteries, and Recycling relevant to this product may be viewed by clicking the Design for Environment link on the webpage.