Quectel M66

The World's Smallest LCC Quad-band GSM/GPRS Module

GSM/GPRS

Quad-band

GPRS Multi-slot Class 12

Extended Temperature Range -40°C to +85°C

Highly Compact Size

LCC Type

Embedded Internet Services Protocols

Quectel Enhanced AT Commands

Digital Audio

Bluetooth 3.0*

M66 is currently the smallest Quad-band GSM/GPRS module using LCC castellation packaging on the market. Based on the latest 2G chipset, it has the optimal performance in SMS & Data transmission and audio service even in harsh environment. Its ultra-compact 15.8 × 17.7 × 2.3mm profile makes M66 a perfect platform for size sensitive applications.

M66 adopts surface mounted technology, making it the ideal solution for durable and rugged designs. And its low profile and small size of LCC package ensure M66 easily embedded into the low-volume applications and provide the reliable connectivity with the applications. This kind of package is ideally suited for large-scale manufacturing which has the strict requirements for cost and efficiency.

Its compact form factor, low power consumption and extended temperature make M66 the best choice for applications such as wearable devices, automotive, industrial PDA, personal tracking, wireless POS, smart metering, telematics and other M2M applications.

Key Benefits

- The globe's tiniest Quad-band LCC GSM/GPRS module
- Easier soldering process with LCC package
- Power consumption as low as 1.3mA
- Support Voice, Bluetooth*, QuecFOTA™ and Quectel OpenCPU function
- Embedded powerful Internet service protocols, multiple Sockets & IP addresses

QUECTEL

Wireless Module Expert

Quectel M66

The World's Smallest LCC Quad-band GSM/GPRS Module

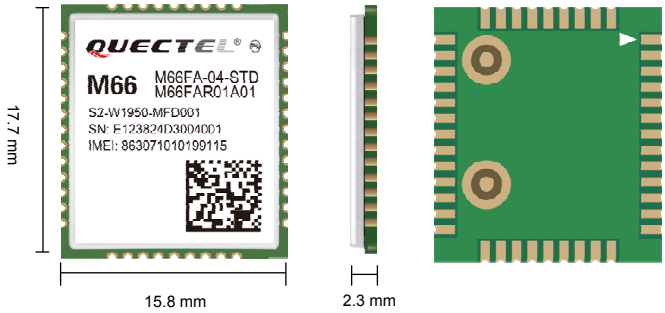

General Features

Quad-band	850/900/1800/1900MHz
GPRS Multi-slot Class	Class 12
GPRS Mobile Station	Class B
Compliant to GSM Phase 2/2+	Class 4 (2W @850/900MHz) Class 1 (1W @1800/1900MHz)
Supply Voltage Range	3.3~4.6V 4.0V nominal
Low Power Consumption	1.3mA @DRX=5 1.2mA @DRX=9
Operation Temperature	-40 °C ~ +85 °C
Dimensions	17.7 × 15.8 × 2.3mm
Weight	Approx. 1.3g
Control via AT Commands	GSM 07.07, 07.05 and other enhanced AT Commands

Specifications for Data

GPRS Class 12	85.6kbps (Downlink) 85.6kbps (Uplink)
PBCCH support	
Coding Schemes	CS 1, 2, 3, 4
USSD	
Non Transparent Mode	
Protocols	TCP/UDP/PPP/FTP/HTTP/SMTP/CMUX/SSL

Specifications for SMS

Point-to-point MO and MT

SMS Cell Broadcast

Text and PDU Mode

Specifications for Voice

Speech Codec Modes	Half Rate (HR) Full Rate (FR) Enhanced Full Rate (EFR) Adaptive Multi-Rate (AMR)
Echo Arithmetic	Echo Cancellation Echo Suppression Noise Reduction

Interfaces

SIM/USIM	3V/1.8V
UART	×3
Analog Audio Channel	2 output channels and 1 input channel
Bluetooth	BT 3.0* Profile: SPP*, OPP*
ADC	×1
PCM	×1
RTC	×1
Antenna PAD	×2 (One for GSM antenna, the other for Bluetooth antenna)

* Under development

QUECTEL
Wireless Module Expert

Copyright © 2014 Quectel Wireless Solutions Co., Ltd. All Rights Reserved http://www.quectel.com

HQ address: Office 501, Building 13, No.99
Tianzhou Road, Shanghai, China 200233
Tel: +86 21 51086236
Fax: +86 21 54453668
Email: info@quectel.com

M66 Hardware Design

GSM/GPRS Module Series

Rev. M66_Hardware_Design_V1.0

Date: 2014-08-07

www.quectel.com

Our aim is to provide customers with timely and comprehensive service. For any assistance, please contact our company headquarters:

Quectel Wireless Solutions Co., Ltd.
Office 501, Building 13, No.99, Tianzhou Road, Shanghai, China, 200233
Tel: +86 21 5108 6236
Mail: info@quectel.com

Or our local office, for more information, please visit:
http://www.quectel.com/support/salesupport.aspx

For technical support, to report documentation errors, please visit:
http://www.quectel.com/support/techsupport.aspx

GENERAL NOTES

QUECTEL OFFERS THIS INFORMATION AS A SERVICE TO ITS CUSTOMERS. THE INFORMATION PROVIDED IS BASED UPON CUSTOMERS' REQUIREMENTS. QUECTEL MAKES EVERY EFFORT TO ENSURE THE QUALITY OF THE INFORMATION IT MAKES AVAILABLE. QUECTEL DOES NOT MAKE ANY WARRANTY AS TO THE INFORMATION CONTAINED HEREIN, AND DOES NOT ACCEPT ANY LIABILITY FOR ANY INJURY, LOSS OR DAMAGE OF ANY KIND INCURRED BY USE OF OR RELIANCE UPON THE INFORMATION. ALL INFORMATION SUPPLIED HEREIN IS SUBJECT TO CHANGE WITHOUT PRIOR NOTICE.

COPYRIGHT

THIS INFORMATION CONTAINED HERE IS PROPRIETARY TECHNICAL INFORMATION OF QUECTEL CO., LTD. TRANSMITTABLE, REPRODUCTION, DISSEMINATION AND EDITING OF THIS DOCUMENT AS WELL AS UTILIZATION OF THIS CONTENTS ARE FORBIDDEN WITHOUT PERMISSION. OFFENDERS WILL BE HELD LIABLE FOR PAYMENT OF DAMAGES. ALL RIGHTS ARE RESERVED IN THE EVENT OF A PATENT GRANT OR REGISTRATION OF A UTILITY MODEL OR DESIGN.

Copyright © Quectel Wireless Solutions Co., Ltd. 2014. All rights reserved.

About the Document

History

Revision	Date	Author	Description
1.0	2014-08-07	Felix YIN	Initial

Quectel Confidential

Contents

About the Document **2**
Contents **3**
Table Index **6**
Figure Index **7**

1 Introduction **9**
1.1. Safety Information 10

2 Product Concept **11**
2.1. General Description 11
2.2. Key Features 11
2.3. Functional Diagram 14
2.4. Evaluation Board 14

3 Application Interface **15**
3.1. Pin of Module 16
3.1.1. Pin Assignment 16
3.1.2. Pin Description 17
3.2. Operating Modes 21
3.3. Power Supply 22
3.3.1. Power Features of Module 22
3.3.2. Decrease Supply Voltage Drop 22
3.3.3. Reference Design For Power Supply 23
3.3.4. Monitor Power Supply 24
3.4. Power On and Down Scenarios 24
3.4.1. Power On 24
3.4.2. Power Down 26
3.4.2.1. Power Down Module Using the PWRKEY Pin 26
3.4.2.2. Power Down Module Using AT Command 27
3.4.2.3. Over-voltage or Under-voltage Automatic Shutdown 28
3.4.3. Restart 28
3.5. Power Saving 29
3.5.1. Minimum Functionality Mode 29
3.5.2. SLEEP Mode 30
3.5.3. Wake Up Module From SLEEP Mode 30
3.5.4. Summary of State Transition 30
3.6. RTC Backup 31
3.7. Serial Interfaces 32
3.7.1. UART Port 34
3.7.1.1. The Feature of UART Port 34
3.7.1.2. The Connection of UART 35
3.7.1.3. Firmware Upgrade 36
3.7.2. Debug Port 37

Quectel Confidential

3.7.3. Auxiliary UART Port 38
3.7.4. UART Application 38
3.8. Audio Interfaces 39
3.8.1. Decrease TDD Noise and other Noise 40
3.8.2. Microphone Interfaces Design 41
3.8.3. Receiver and Speaker Interface Design 41
3.8.4. Earphone Interface Design 43
3.8.5. Audio Characteristics 43
3.9. PCM Interface 44
3.9.1. Configuration 44
3.9.2. Timing 45
3.9.3. Reference Design 46
3.9.4. AT Command 47
3.10. SIM Card Interface 48
3.10.1. SIM Card Application 48
3.10.2. 6-Pin SIM Cassette 50
3.11. ADC 51
3.12. Behaviors of The RI 51
3.13. Network Status Indication 53
3.14. RF Transmitting Signal Indication 54

4 Antenna Interface 55
4.1. GSM Antenna Interface 55
4.1.1. Reference Design 55
4.1.2. RF Output Power 57
4.1.3. RF Receiving Sensitivity 57
4.1.4. Operating Frequencies 58
4.1.5. RF Cable Soldering 58
4.2. Bluetooth Antenna Interface 58

5 Electrical, Reliability and Radio Characteristics 60
5.1. Absolute Maximum Ratings 60
5.2. Operating Temperature 60
5.3. Power Supply Ratings 61
5.4. Current Consumption 62
5.5. Electro-static Discharge 64

6 Mechanical Dimensions 65
6.1. Mechanical Dimensions of Module 65
6.2. Recommended Footprint 67
6.3. Top View of the Module 68
6.4. Bottom View of the Module 68

7 Storage and Manufacturing 69
7.1. Storage 69
7.2. Soldering 70

Quectel Confidential

7.3. Packaging 70
7.3.1. Tape and Reel Packaging 71

8 Appendix A Reference 72
9 Appendix B GPRS Coding Scheme 77
10 Appendix C GPRS Multi-slot Class 79

Quectel Confidential

Table Index

TABLE 1: MODULE KEY FEATURES 12
TABLE 2: CODING SCHEMES AND MAXIMUM NET DATA RATES OVER AIR INTERFACE 13
TABLE 3: IO PARAMETERS DEFINITION 17
TABLE 4: PIN DESCRIPTION 17
TABLE 5: OVERVIEW OF OPERATING MODES 21
TABLE 6: SUMMARY OF STATE TRANSITION 30
TABLE 7: LOGIC LEVELS OF THE UART INTERFACE 33
TABLE 8: PIN DEFINITION OF THE UART INTERFACES 33
TABLE 9: PIN DEFINITION OF AUDIO INTERFACE 39
TABLE 10: TYPICAL ELECTRET MICROPHONE CHARACTERISTICS 43
TABLE 11: TYPICAL SPEAKER CHARACTERISTICS 43
TABLE 12: PIN DEFINITION OF PCM INTERFACE 44
TABLE 13: CONFIGURATION 44
TABLE 14: QPCMON COMMAND DESCRIPTION 47
TABLE 15: QPCMVOL COMMAND DESCRIPTION 48
TABLE 16: PIN DEFINITION OF THE SIM INTERFACE 48
TABLE 17: PIN DESCRIPTION OF AMPHENOL SIM CARD HOLDER 50
TABLE 18: PIN DEFINITION OF THE ADC 51
TABLE 19: CHARACTERISTICS OF THE ADC 51
TABLE 20: BEHAVIORS OF THE RI 51
TABLE 21: WORKING STATE OF THE NETLIGHT 53
TABLE 22: PIN DEFINITION OF THE RFTXMON 54
TABLE 23: PIN DEFINITION OF THE RF_ANT 55
TABLE 24: ANTENNA CABLE REQUIREMENTS 56
TABLE 25: ANTENNA REQUIREMENTS 56
TABLE 26: THE MODULE CONDUCTED RF OUTPUT POWER 57
TABLE 27: THE MODULE CONDUCTED RF RECEIVING SENSITIVITY 57
TABLE 28: THE MODULE OPERATING FREQUENCIES 58
TABLE 29: PIN DEFINITION OF THE BT_ANT 59
TABLE 30: ABSOLUTE MAXIMUM RATINGS 60
TABLE 31: OPERATING TEMPERATURE 60
TABLE 32: THE MODULE POWER SUPPLY RATINGS 61
TABLE 33: THE MODULE CURRENT CONSUMPTION 62
TABLE 34: THE ESD ENDURANCE (TEMPERATURE: 25ºC, HUMIDITY: 45%) 64
TABLE 35: RELATED DOCUMENTS 72
TABLE 36: TERMS AND ABBREVIATIONS 73
TABLE 37: DESCRIPTION OF DIFFERENT CODING SCHEMES 77
TABLE 38: GPRS MULTI-SLOT CLASSES 79

Quectel Confidential

Figure Index

FIGURE 1: MODULE FUNCTIONAL DIAGRAM 14
FIGURE 2: PIN ASSIGNMENT 16
FIGURE 3: VOLTAGE RIPPLE DURING TRANSMITTING 22
FIGURE 4: REFERENCE CIRCUIT FOR THE VBAT INPUT 23
FIGURE 5: REFERENCE CIRCUIT FOR POWER SUPPLY 24
FIGURE 6: TURN ON THE MODULE WITH AN OPEN-COLLECTOR DRIVER 24
FIGURE 7: TURN ON THE MODULE WITH A BUTTON 25
FIGURE 8: TURN-ON TIMING 26
FIGURE 9: TURN-OFF TIMING 27
FIGURE 10: TIMING OF RESTARTING SYSTEM 29
FIGURE 11: RTC SUPPLY FROM A NON-CHARGEABLE BATTERY 31
FIGURE 12: RTC SUPPLY FROM A RECHARGEABLE BATTERY 31
FIGURE 13: RTC SUPPLY FROM A CAPACITOR 31
FIGURE 14: CHARGING CHARACTERISTICS OF SEIKO'S XH414H-IV01E 32
FIGURE 15: REFERENCE DESIGN FOR FULL-FUNCTION UART 35
FIGURE 16: REFERENCE DESIGN FOR UART PORT 36
FIGURE 17: REFERENCE DESIGN FOR UART PORT WITH HARDWARE FLOW CONTROL 36
FIGURE 18: REFERENCE DESIGN FOR FIRMWARE UPGRADE 37
FIGURE 19: REFERENCE DESIGN FOR DEBUG PORT 37
FIGURE 20: REFERENCE DESIGN FOR AUXILIARY UART PORT 38
FIGURE 21: LEVEL MATCH DESIGN FOR 3.3V SYSTEM 38
FIGURE 22: LEVEL MATCH DESIGN FOR RS-232 39
FIGURE 23: REFERENCE DESIGN FOR AIN 41
FIGURE 24: REFERENCE DESIGN FOR AOUT1 41
FIGURE 25: HANDSET INTERFACE DESIGN FOR AOUT2 42
FIGURE 26: SPEAKER INTERFACE DESIGN WITH AN AMPLIFIER FOR AOUT2 42
FIGURE 27: EARPHONE INTERFACE DESIGN 43
FIGURE 28: LONG SYNCHRONIZATION & SIGN EXTENSION DIAGRAM 45
FIGURE 29: LONG SYNCHRONIZATION & ZERO PADDING DIAGRAM 46
FIGURE 30: SHORT SYNCHRONIZATION & SIGN EXTENSION DIAGRAM 46
FIGURE 31: SHORT SYNCHRONIZATION & ZERO PADDING DIAGRAM 46
FIGURE 32: REFERENCE DESIGN FOR PCM 47
FIGURE 33: REFERENCE CIRCUIT FOR SIM INTERFACE WITH THE 6-PIN SIM CARD HOLDER 49
FIGURE 34: AMPHENOL C707 10M006 512 2 SIM CARD HOLDER 50
FIGURE 35: RI BEHAVIOR OF VOICE CALLING AS A RECEIVER 52
FIGURE 36: RI BEHAVIOR AS A CALLER 52
FIGURE 37: RI BEHAVIOR OF URC OR SMS RECEIVED 52
FIGURE 38: REFERENCE DESIGN FOR NETLIGHT 53
FIGURE 39: RFTXMON SIGNAL DURING TRANSMITTING BURST 54
FIGURE 40: REFERENCE DESIGN FOR GSM ANTENNA 56
FIGURE 41: RF SOLDERING SAMPLE 58

Quectel Confidential

FIGURE 42: REFERENCE DESIGN FOR BLUETOOTH ANTENNA 59
FIGURE 43: M66 MODULE TOP AND SIDE DIMENSIONS (UNIT: MM) 65
FIGURE 44: M66 MODULE BOTTOM DIMENSIONS (UNIT: MM) 66
FIGURE 45: RECOMMENDED FOOTPRINT (UNIT: MM) 67
FIGURE 46: TOP VIEW OF THE MODULE 68
FIGURE 47: BOTTOM VIEW OF THE MODULE 68
FIGURE 48: RAMP-SOAK-SPIKE REFLOW PROFILE 70
FIGURE 49: TAPE AND REEL SPECIFICATION 71
FIGURE 50: DIMENSIONS OF REEL 71
FIGURE 51: RADIO BLOCK STRUCTURE OF CS-1, CS-2 AND CS-3 77
FIGURE 52: RADIO BLOCK STRUCTURE OF CS-4 78

Quectel Confidential

1 Introduction

This document defines the M66 module and describes its hardware interface which are connected with the customer application and the air interface.

This document can help you quickly understand module interface specifications, electrical and mechanical details. Associated with application note and user guide, you can use M66 module to design and set up mobile applications easily.

Quectel Confidential

1.1. Safety Information

The following safety precautions must be observed during all phases of the operation, such as usage, service or repair of any cellular terminal or mobile incorporating M66 module. Manufacturers of the cellular terminal should send the following safety information to users and operating personnel and to incorporate these guidelines into all manuals supplied with the product. If not so, Quectel does not take on any liability for customer failure to comply with these precautions.

	Full attention must be given to driving at all times in order to reduce the risk of an accident. Using a mobile while driving (even with a handsfree kit) cause distraction and can lead to an accident. You must comply with laws and regulations restricting the use of wireless devices while driving.
	Switch off the cellular terminal or mobile before boarding an aircraft. Make sure it switched off. The operation of wireless appliances in an aircraft is forbidden to prevent interference with communication systems. Consult the airline staff about the use of wireless devices on boarding the aircraft, if your device offers a Airplane Mode which must be enabled prior to boarding an aircraft.
	Switch off your wireless device when in hospitals or clinics or other health care facilities. These requests are desinged to prevent possible interference with sentitive medical equipment.
	GSM cellular terminals or mobiles operate over radio frequency signal and cellular network and cannot be guaranteed to connect in all conditions, for example no mobile fee or an invalid SIM card. While you are in this condition and need emergent help, please remember using emergency call. In order to make or receive call, the cellular terminal or mobile must be switched on and in a service area with adequate cellular signal strength.
	Your cellular terminal or mobile contains a transmitter and receiver. When it is ON , it receives and transmits radio frequency energy. RF interference can occur if it is used close to TV set, radio, computer or other electric equipment.
	In locations with potencially explosive atmospheres, obey all posted signs to turn off wireless devices such as your phone or other cellular terminals. Areas with potencially exposive atmospheres including fuelling areas, below decks on boats, fuel or chemical transfer or storage facilities, areas where the air contains chemicals or particles such as grain, dust or metal powders.

Quectel Confidential

2 Product Concept

2.1. General Description

M66 is a Quad-band GSM/GPRS engine that works at frequencies of GSM850MHz, GSM900MHz, DCS1800MHz and PCS1900MHz. The M66 features GPRS multi-slot class 12 and supports the GPRS coding schemes CS-1, CS-2, CS-3 and CS-4. For more details about GPRS multi-slot classes and coding schemes, please refer to the ***Appendix B & C.***

With a tiny profile of 15.8mm × 17.7mm × 2.3mm, the module can meet almost all the requirements for M2M applications, including Vehicles and Personal Tracking, Security System, Wireless POS, Industrial PDA, Smart Metering, and Remote Maintenance& Control, etc.

M66 is an SMD type module with LCC package, which can be easily embedded into applications. It provides abundant hardware interfaces like PCM Interface.

Designed with power saving technique, the current consumption of M66 is as low as 1.3 mA in SLEEP mode when DRX is 5.

M66 is integrated with Internet service protocols, such as TCP/UDP, FTP and PPP. Extended AT commands have been developed for you to use these Internet service protocols easily.

M66 supports Bluetooth interface, It is fully compliant with Bluetooth specification 3.0.

The module fully complies with the RoHS directive of the European Union.

2.2. Key Features

The following table describes the detailed features of M66 module.

Quectel Confidential

Table 1: Module Key Features

Feature	Implementation
Power Supply	Single supply voltage: 3.3V ~ 4.6V Typical supply voltage: 4V
Power Saving	Typical power consumption in SLEEP mode: 1.3 mA @DRX=5 1.2 mA @DRX=9
Frequency Bands	● Quad-band: GSM850, GSM900, DCS1800, PCS1900. ● The module can search these frequency bands automatically ● The frequency bands can be set by AT command ● Compliant to GSM Phase 2/2+
GSM Class	Small MS
Transmitting Power	● Class 4 (2W) at GSM850 and GSM900 ● Class 1 (1W) at DCS1800 and PCS1900
GPRS Connectivity	● GPRS multi-slot class 12 (default) ● GPRS multi-slot class 1~12 (configurable) ● GPRS mobile station class B
DATA GPRS	● GPRS data downlink transfer: max. 85.6kbps ● GPRS data uplink transfer: max. 85.6kbps ● Coding scheme: CS-1, CS-2, CS-3 and CS-4 ● Support the protocols PAP (Password Authentication Protocol) usually used for PPP connections ● Internet service protocols TCP/UDP, FTP, PPP, HTTP, NTP, PING ● Support Packet Broadcast Control Channel (PBCCH) ● Support Unstructured Supplementary Service Data (USSD)
Temperature Range	● Normal operation: -35°C ~ +80°C ● Restricted operation: -40°C ~ -35°C and +80°C ~ +85°C [1)] ● Storage temperature: -45°C ~ +90°C
Bluetooth	● Support Bluetooth specification 3.0 ● Output Power: Class 1 (1W)
SMS	● Text and PDU mode ● SMS storage: SIM card
SIM Interface	Support SIM card: 1.8V, 3.0V
Audio Features	Speech codec modes: ● Half Rate (ETS 06.20) ● Full Rate (ETS 06.10) ● Enhanced Full Rate (ETS 06.50/06.60/06.80) ● Adaptive Multi-Rate (AMR) ● Echo Suppression ● Noise Reduction
UART Interfaces	UART Port:

Quectel Confidential

	● Seven lines on UART port interface ● Used for AT command, GPRS data ● Multiplexing function ● Support autobauding from 4800bps to 115200bps Debug Port: ● Two lines on debug port interface DBG_TXD and DBG_RXD ● Debug Port only used for firmware debugging Auxiliary Port: ● Used for AT command
Phonebook Management	Support phonebook types: SM, ME, ON, MC, RC, DC, LD, LA
SIM Application Toolkit	Support SAT class 3, GSM 11.14 Release 99
Real Time Clock	Supported
Physical Characteristics	Size: 15.8±0.15 × 17.7±0.15 × 2.3±0.2mm Weight: Approx. 1.3g
Firmware Upgrade	Firmware upgrade via UART Port
Antenna Interface	Connected to antenna pad with 50 Ohm impedance control

NOTE

[1)] When the module works within this temperature range, the deviations from the GSM specification may occur. For example, the frequency error or the phase error will be increased.

Table 2: Coding Schemes and Maximum Net Data Rates over Air Interface

Coding Scheme	1 Timeslot	2 Timeslot	4 Timeslot
CS-1	9.05kbps	18.1kbps	36.2kbps
CS-2	13.4kbps	26.8kbps	53.6kbps
CS-3	15.6kbps	31.2kbps	62.4kbps
CS-4	21.4kbps	42.8kbps	85.6kbps

Quectel Confidential

2.3. Functional Diagram

The following figure shows a block diagram of M66 and illustrates the major functional parts.

- Radio frequency part
- Power management
- The peripheral interface
  —Power supply
  —Turn-on/off interface
  —UART interface
  —Audio interface
  —PCM interface
  —SIM interface
  —ADC interface
  —RF interface
  —BT interface

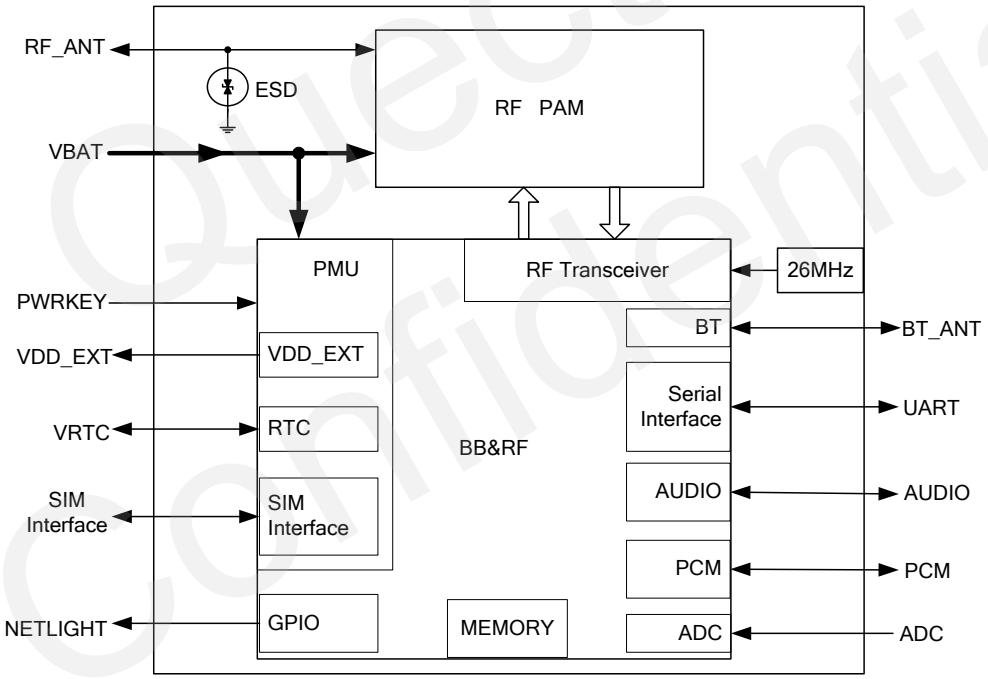

Figure 1: Module Functional Diagram

2.4. Evaluation Board

In order to help you to develop applications with M66, Quectel supplies an evaluation board (EVB), RS-232 to USB cable, power adapter, earphone, antenna and other peripherals to control or test the module. For details, please refer to the ***document [12]***.

3 Application Interface

The module adopts LCC package and has 44 pins. The following chapters provide detailed descriptions about these pins.

- Power supply
- Power on/down
- Power Saving
- RTC
- Serial interfaces
- Audio interfaces
- PCM interface
- SIM Card interface
- ADC

Quectel Confidential

3.1. Pin of Module

3.1.1. Pin Assignment

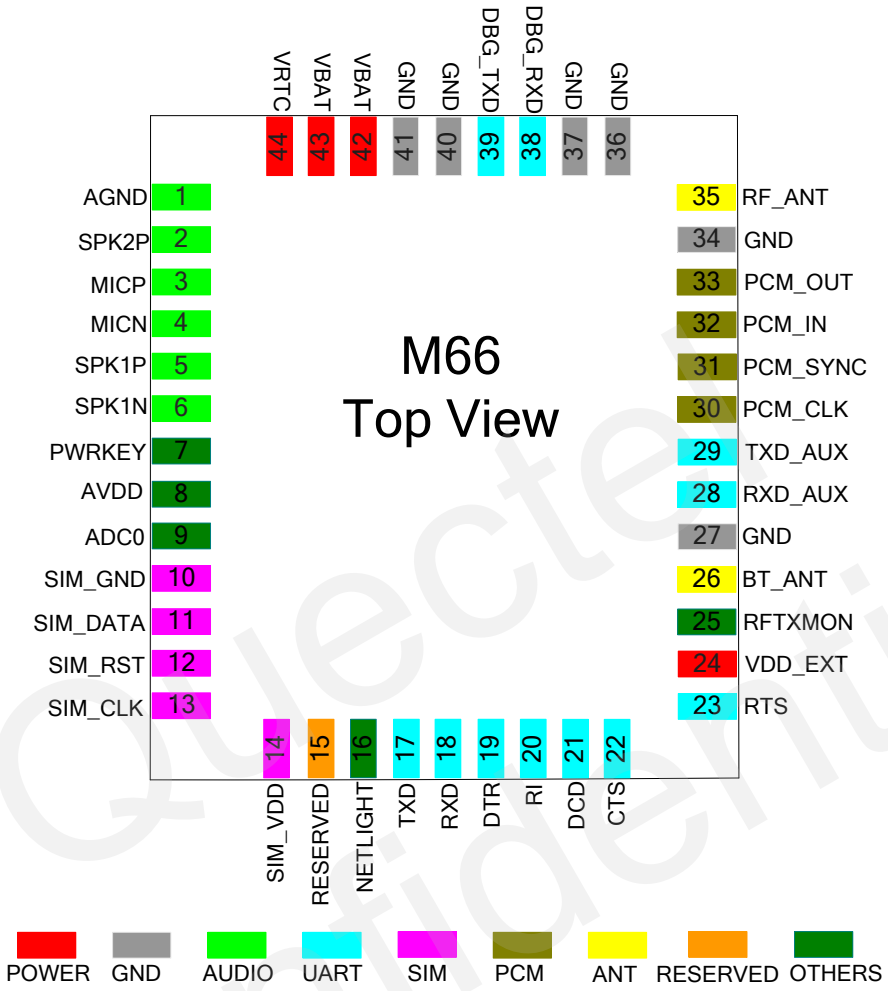

Figure 2: Pin Assignment

NOTE

Keep all reserved pins open.

Quectel Confidential

3.1.2. Pin Description

Table 3: IO Parameters Definition

Type	Description
IO	Bidirectional input/output
DI	Digital input
DO	Digital output
PI	Power input
PO	Power output
AI	Analog input
AO	Analog output

Table 4: Pin Description

Power Supply					
PIN Name	**PIN No.**	**I/O**	**Description**	**DC Characteristics**	**Comment**
VBAT	42,43	PI	Main power supply of module: VBAT=3.3V~4.6V	$V_I$max=4.6V $V_I$min=3.3V $V_I$norm=4.0V	Make sure that supply sufficient current in a transmitting burst typically rises to 1.6A.
VRTC	44	IO	Power supply for RTC when VBAT is not supplied for the system. Charging for backup battery or golden capacitor when the VBAT is applied.	$V_I$max=3.3V $V_I$min=1.5V $V_I$norm=2.8V $V_O$max=3V $V_O$min=2V $V_O$norm=2.8V Iout(max)=2mA Iin≈10uA	If unused, keep this pin open.
VDD_EXT	24	PO	Supply 2.8V voltage for external circuit.	$V_O$max=2.9V $V_O$min=2.7V $V_O$norm=2.8V $I_O$max=20mA	1. If unused, keep this pin open. 2. Recommend to add a 2.2~4.7uF bypass capacitor,

Quectel Confidential

					when using this pin for power supply.
GND	27,34 36,37 40,41		Ground		
Turn On/off					
PIN Name	**PIN No.**	**I/O**	**Description**	**DC Characteristics**	**Comment**
PWR KEY	7	DI	Power on/off key. PWRKEY should be pulled down for a moment to turn on or turn off the system.	V_{IL}max= 0.1×VBAT V_{IH}min= 0.6×VBAT V_{IH}max=3.1V	
Audio Interface					
PIN Name	**PIN No.**	**I/O**	**Description**	**DC Characteristics**	**Comment**
MICP MICN	3, 4	AI	Positive and negative voice input	Refer to Section 3.8	If unused, keep these pins open.
SPK1P SPK1N	5, 6	AO	Channel 1 positive and negative voice output		If unused, keep these pins open. Support both voice and ringtone output.
SPK2P	2	AO	Channel 2 voice output		
AGND	1		Analog ground. Separate ground connection for external audio circuits.		If unused, keep this pin open.
Network Status Indicator					
PIN Name	**PIN No.**	**I/O**	**Description**	**DC Characteristics**	**Comment**
NETLIGHT	16	DO	Network status indication	V_{OH}min= 0.85×VDD_EXT V_{OL}max= 0.15×VDD_EXT	If unused, keep this pin open.
UART Port					
PIN Name	**PIN No.**	**I/O**	**Description**	**DC Characteristics**	**Comment**
TXD	17	DO	Transmit data	V_{IL}min=0V V_{IL}max= 0.25×VDD_EXT	If only use TXD, RXD and GND to communicate,
RXD	18	DI	Receive data		

Quectel Confidential

DTR	19	DI	Data terminal ready	V_{IH}min= 0.75×VDD_EXT V_{IH}max= VDD_EXT+0.3 V_{OH}min= 0.85×VDD_EXT V_{OL}max= 0.15×VDD_EXT	recommended connecting RTS to GND via 0R resistor and keeping other pins open.
RI	20	DI	Ring indication		
DCD	21	DO	Data carrier detection		
CTS	22	DO	Clear to send		
RTS	23	DI	Request to send		
Debug Port					
PIN Name	**PIN No.**	**I/O**	**Description**	**DC Characteristics**	**Comment**
DBG_ TXD	39	DO	Transmit data	Same as above	If unused, keep these pins open.
DBG_ RXD	38	DI	Receive data		
Auxiliary Port					
PIN Name	**PIN No.**	**I/O**	**Description**	**DC Characteristics**	**Comment**
TXD_ AUX	29	DO	Transmit data	Same as above	If unused, keep these pins open.
RXD_ AUX	28	DI	Receive data		
SIM Interface					
PIN Name	**PIN No.**	**I/O**	**Description**	**DC Characteristics**	**Comment**
SIM_ VDD	14	PO	Power supply for SIM card	The voltage can be selected by software automatically. Either 1.8V or 3.0V.	All signals of SIM interface should be protected against ESD with a TVS diode array. Maximum trace length is 200mm from the module pad to SIM card holder.
SIM_ CLK	13	DO	SIM clock	V_{OL}max= 0.15×SIM_VDD V_{OH}min= 0.85×SIM_VDD	
SIM_ DATA	11	IO	SIM data	V_{IL}max= 0.25×SIM_VDD V_{IH}min= 0.75×SIM_VDD V_{OL}max= 0.15×SIM_VDD V_{OH}min= 0.85×SIM_VDD	

Quectel Confidential

SIM_RST	12	DO	SIM reset	V_{OL}max= 0.15×SIM_VDD V_{OH}min= 0.85×SIM_VDD	
SIM_GND	10		SIM ground		
ADC					
PIN Name	**PIN No.**	**I/O**	**Description**	**DC Characteristics**	**Comment**
AVDD	8	PO	Reference voltage of ADC circuit	$V_O$max=2.9V $V_O$min=2.7V $V_O$norm=2.8V	If unused, keep this pin open.
ADC0	9	AI	General purpose analog to digital converter.	Voltage range: 0V to 2.8V	If unused, keep this pin open.
PCM					
PIN Name	**PIN No.**	**I/O**	**Description**	**DC Characteristics**	**Comment**
PCM_CLK	30	DO	PCM clock	V_{IL}min= 0V V_{IL}max= 0.25×VDD_EXT V_{IH}min= 0.75×VDD_EXT V_{IH}max= VDD_EXT+0.3 V_{OH}min= 0.85×VDD_EXT V_{OL}max= 0.15×VDD_EXT	
PCM_SYNC	31	DO	PCM frame synchronization		
PCM_IN	32	DI	PCM data input		
PCM_OUT	33	DO	PCM data output		
Antenna Interface					
PIN Name	**PIN No.**	**I/O**	**Description**	**DC Characteristics**	**Comment**
RF_ANT	35	IO	GSM antenna pad	Impedance of 50Ω	
BT_ANT	26	IO	BT antenna pad	Impedance of 50Ω	
Transmitting Signal Indication					
PIN Name	**PIN No.**	**I/O**	**Description**	**DC Characteristics**	
RFTXMON	25	DO	Transmission signal indication	V_{OH}min= 0.85×VDD_EXT	

Quectel Confidential

				V_{OL}max= 0.15×VDD_EXT	
Other Interface					
PIN Name	**PIN No.**	**I/O**	**Description**	**DC Characteristics**	**Comment**
RESERVED	15				Keep these pins open.

3.2. Operating Modes

The table below briefly summarizes the various operating modes in the following chapters.

Table 5: Overview of Operating Modes

Mode	Function	
Normal Operation	GSM/GPRS Sleep	After enabling sleep mode by **AT+QSCLK=1**, the module will automatically enter into Sleep Mode if DTR is set to high level and there is no interrupt (such as GPIO interrupt or data on UART port). In this case, the current consumption of module will reduce to the minimal level. During Sleep Mode, the module can still receive paging message and SMS from the system normally.
	GSM IDLE	Software is active. The module has registered to the GSM network, and the module is ready to send and receive GSM data.
	GSM TALK	GSM connection is ongoing. In this mode, the power consumption is decided by the configuration of Power Control Level (PCL), dynamic DTX control and the working RF band.
	GPRS IDLE	The module is not registered to GPRS network. The module is not reachable through GPRS channel.
	GPRS STANDBY	The module is registered to GPRS network, but no GPRS PDP context is active. The SGSN knows the Routing Area where the module is located at.
	GPRS READY	The PDP context is active, but no data transfer is ongoing. The module is ready to receive or send GPRS data. The SGSN knows the cell where the module is located at.
	GPRS DATA	There is GPRS data in transfer. In this mode, power consumption is decided by the PCL, working RF band and GPRS multi-slot configuration.

Quectel Confidential

POWER DOWN	Normal shutdown by sending the **AT+QPOWD=1** command or using the PWRKEY pin. The power management ASIC disconnects the power supply from the base band part of the module, and only the power supply for the RTC is remained. Software is not active. The UART interfaces are not accessible. Operating voltage (connected to VBAT) remains applied.
Minimum Functionality Mode (without removing power supply)	**AT+CFUN** command can set the module to a minimum functionality mode without removing the power supply. In this case, the RF part of the module will not work or the SIM card will not be accessible, or both RF part and SIM card will be disabled, but the UART port is still accessible. The power consumption in this case is very low.

3.3. Power Supply

3.3.1. Power Features of Module

The power supply is one of the key issues in designing GSM terminals. Because of the 577us radio burst in GSM every 4.615ms, power supply must be able to deliver high current peaks in a burst period. During these peaks, drops on the supply voltage must not exceed minimum working voltage of module.

For the M66 module, the max current consumption could reach to 1.6A during a burst transmission. It will cause a large voltage drop on the VBAT. In order to ensure stable operation of the module, it is recommended that the max voltage drop during the burst transmission does not exceed 400mV.

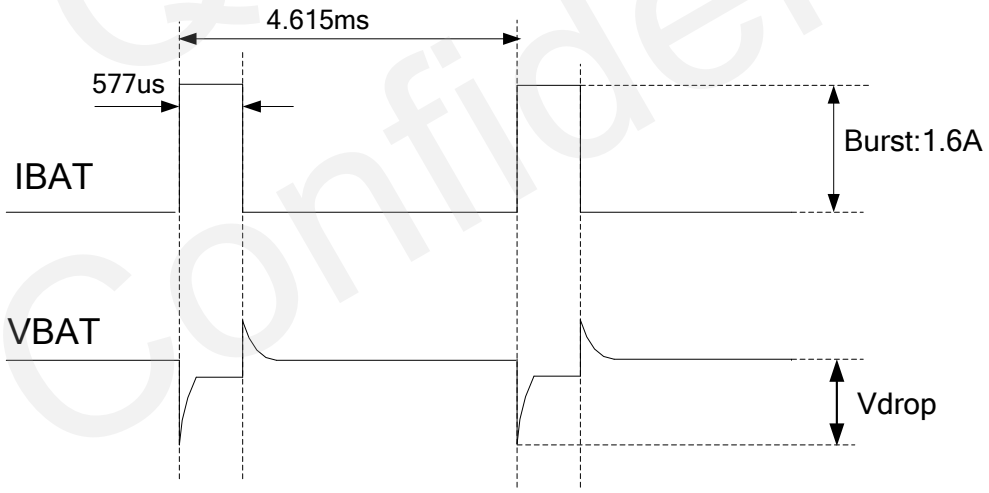

Figure 3: Voltage Ripple during Transmitting

3.3.2. Decrease Supply Voltage Drop

The power supply range of the module is 3.3V to 4.6V. Make sure that the input voltage will never drop below 3.3V even in a burst transmission. If the power voltage drops below 3.3V, the module could turn off

Quectel Confidential

automatically. For better power performance, it is recommended to place a 100uF tantalum capacitor with low ESR (ESR=0.7Ω) and ceramic capacitor 100nF, 33pF and 10pF near the VBAT pin. The reference circuit is illustrated in Figure 4.

The VBAT route should be wide enough to ensure that there is not too much voltage drop during burst transmission. The width of trace should be no less than 2mm and the principle of the VBAT route is the longer route, the wider trace.

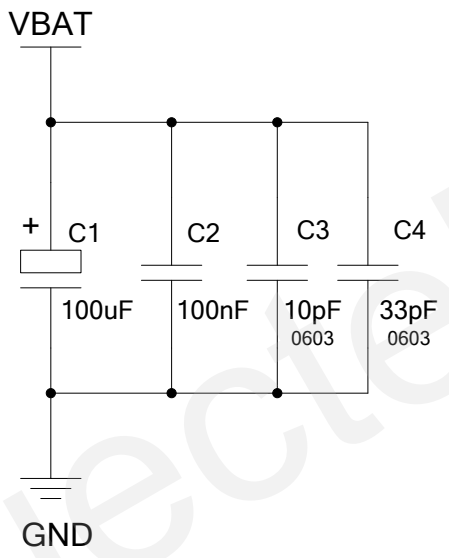

Figure 4: Reference Circuit for the VBAT Input

3.3.3. Reference Design For Power Supply

The power design for the module is very important, since the performance of power supply for the module largely depends on the power source. The power supply is capable of providing the sufficient current up to 2A at least. If the voltage drop between the input and output is not too high, it is suggested to use a LDO as module's power supply. If there is a big voltage difference between the input source and the desired output (VBAT), a switcher power converter is recommended to be used as a power supply.

Figure 5 shows a reference design for +5V input power source. The designed output for the power supply is 4.16V and the maximum load current is 3A. In addition, in order to get a stable output voltage, a zener diode is placed close to the pins of VBAT. As to the zener diode, it is suggested to use a zener diode whose reverse zener voltage is 5.1V and dissipation power is more than 1 Watt.

Quectel Confidential

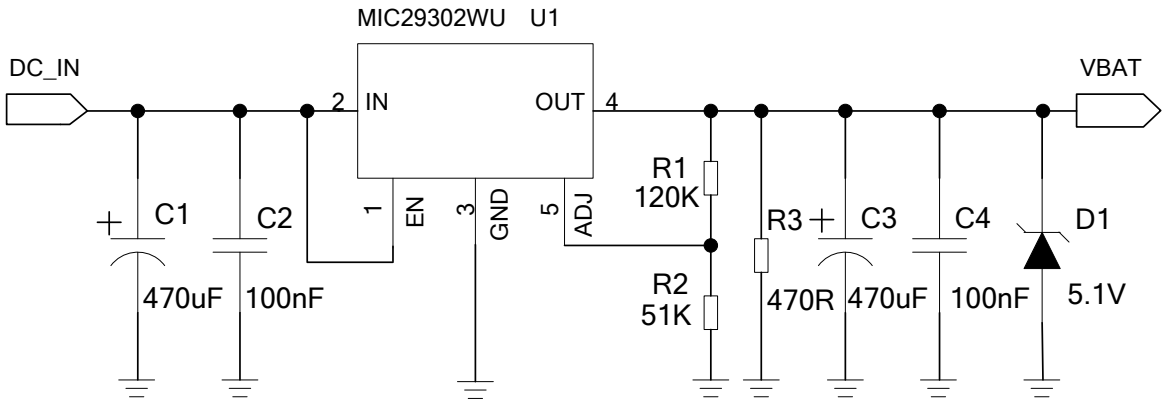

Figure 5: Reference Circuit for Power Supply

3.3.4. Monitor Power Supply

To monitor the supply voltage, customer can use the **AT+CBC** command which includes three parameters: charging status, remaining battery capacity and voltage value (in mV). It returns the 0-100 percent of battery capacity and actual value measured between VBAT and GND. The voltage is automatically measured in period of 5s. The displayed voltage (in mV) is averaged over the last measuring period before the **AT+CBC** command is executed.

For details, please refer to the ***document [1]***.

3.4. Power On and Down Scenarios

3.4.1. Power On

The module can be turned on by driving the pin PWRKEY to a low level voltage. An open collector driver circuit is suggested to control the PWRKEY. A simple reference circuit is illustrated as below.

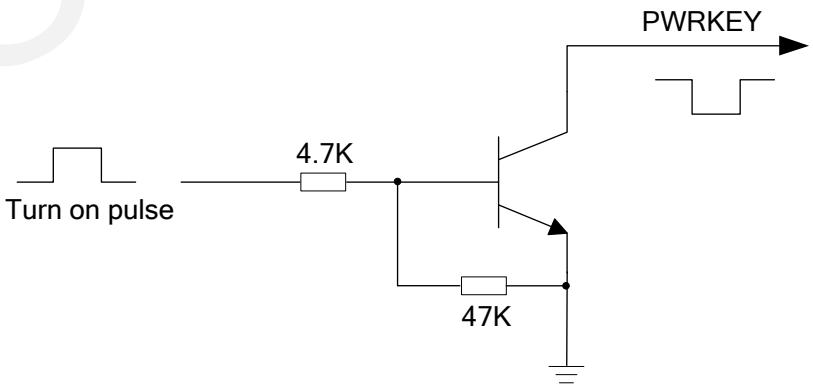

Figure 6: Turn on the Module with an Open-collector Driver

Quectel Confidential

NOTE

M66 module is set to autobauding mode (**AT+IPR=0**) by default. In the autobauding mode, URC **RDY** is not reported to the host controller after module is powered on. When the module is powered on after a delay of 2 or 3 seconds, it can receive AT command. Host controller should first send an **AT** or **at** string in order that the module can detect baud rate of host controller, and it should send the second or the third **AT** or **at** string until receiving **OK** string from the module. Then enter **AT+IPR=x;&W** to set a fixed baud rate for the module and save the configuration to flash memory of the module. After these configurations, the URC **RDY** would be received from the UART port of the module every time when the module is powered on. For more details, refer to the section **AT+IPR** in ***document [1]***.

The other way to control the PWRKEY is through a button directly. A TVS component is indispensable to be placed nearby the button for ESD protection. For the best performance, the TVS component must be placed nearby the button. When pressing the key, electrostatic strike may generate from finger. A reference circuit is shown in the following figure.

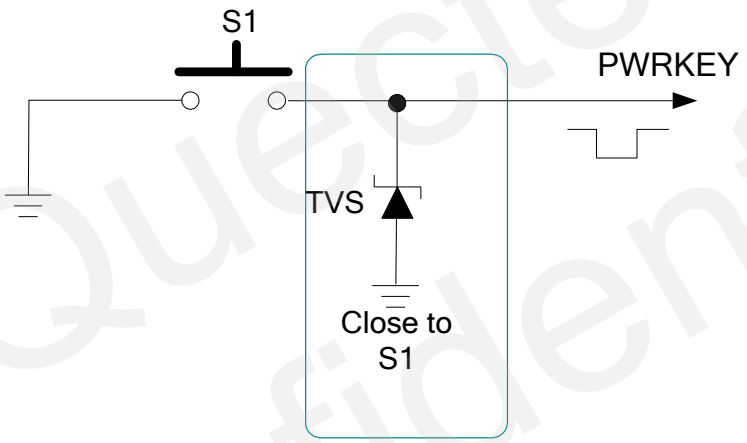

Figure 7: Turn on the Module with a Button

The turn-on timing is illustrated as the following figure.

Quectel Confidential

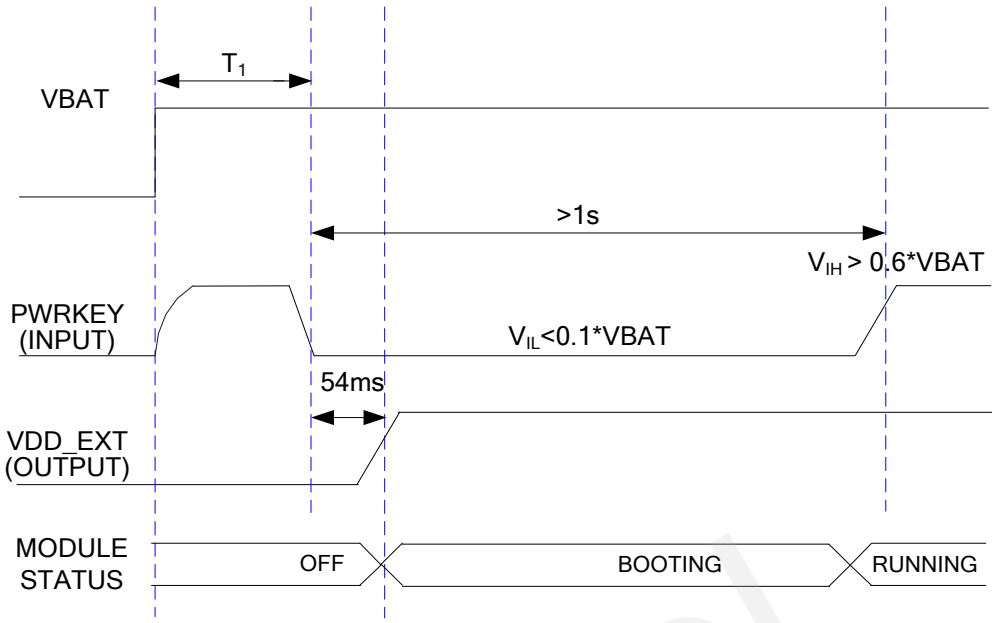

Figure 8: Turn-on Timing

NOTE

Make sure that VBAT is stable before pulling down PWRKEY pin. The time of T_1 is recommended to be 100ms.

3.4.2. Power Down

The following procedures can be used to turn off the module:

- Normal power down procedure: Turn off module using the PWRKEY pin
- Normal power down procedure: Turn off module using command **AT+QPOWD**
- Over-voltage or under-voltage automatic shutdown: Take effect when over-voltage or under-voltage is detected

3.4.2.1. Power Down Module Using the PWRKEY Pin

It is a safe way to turn off the module by driving the PWRKEY to a low level voltage for a certain time. The power down scenario is illustrated in Figure 9.

Quectel Confidential

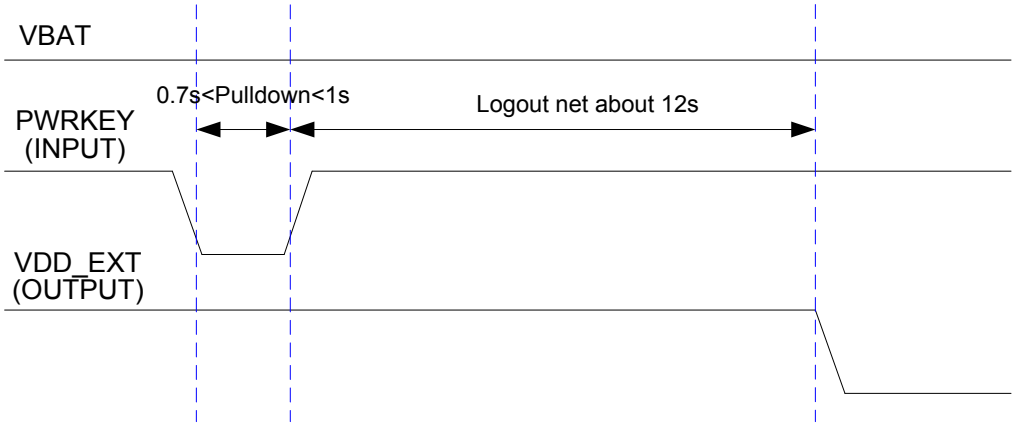

Figure 9: Turn-off Timing

The power down procedure causes the module to log off from the network and allows the firmware to save important data before completely disconnecting the power supply.

Before the completion of the power down procedure, the module sends out the result code shown below:

NORMAL POWER DOWN

NOTE

This result code does not appear when autobauding is active and DTE and DCE are not correctly synchronized after start-up. The module is recommended to set a fixed baud rate.

After that moment, no further AT commands can be executed. Then the module enters the power down mode, the RTC is still active.

3.4.2.2. Power Down Module Using AT Command

It is also a safe way to turn off the module via AT command **AT+QPOWD=1**. This command will let the module log off from the network and allow the firmware to save important data before completely disconnecting the power supply.

Before the completion of the power down procedure the module sends out the result code shown below:

NORMAL POWER DOWN

After that moment, no further AT commands can be executed. And then the module enters the power down mode, only the RTC is still active.

Please refer to the ***document [1]*** for details about the AT command **AT+QPOWD**.

Quectel Confidential

3.4.2.3. Over-voltage or Under-voltage Automatic Shutdown

The module will constantly monitor the voltage applied on the VBAT, if the voltage is ≤3.5V, the following URC will be presented:

UNDER_VOLTAGE WARNING

If the voltage is ≥4.5V, the following URC will be presented:

OVER_VOLTAGE WARNING

The normal input voltage range is from 3.3V to 4.6V. If the voltage is >4.6V or <3.3V, the module would automatically shut down itself.

If the voltage is <3.3V, the following URC will be presented:

UNDER_VOLTAGE POWER DOWN

If the voltage is >4.6V, the following URC will be presented:

OVER_VOLTAGE POWER DOWN

NOTE

These Unsolicited result codes do not appear when autobauding is active and DTE and DCE are not correctly synchronized after start-up. The module is recommended to set to a fixed baud rate.

After that moment, no further AT commands can be executed. The module logs off from network and enters power down mode, and RTC is still active.

3.4.3. Restart

You can restart the module by driving the PWRKEY to a low level voltage for a certain time, which is similar to the way of turning on module. Before restarting the module, at least 500ms should be delayed after detecting the low level of VDD_EXT. The restart timing is illustrated as the following figure.

Quectel Confidential

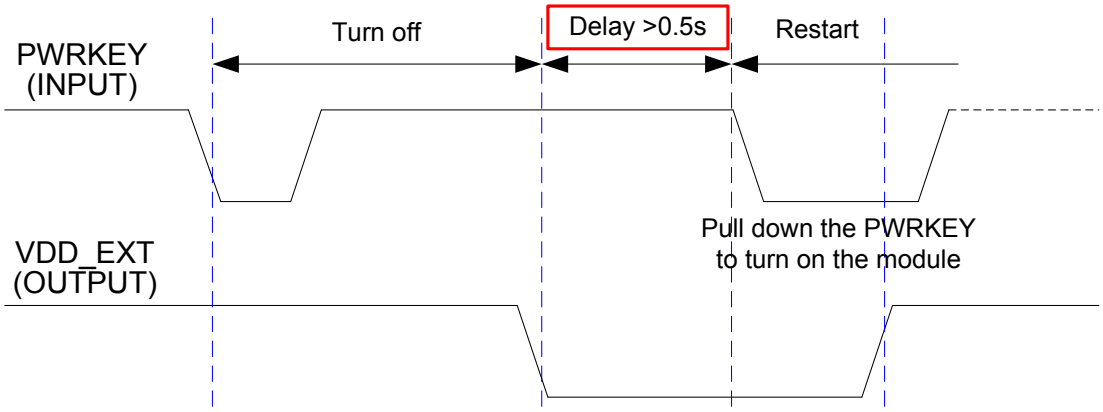

Figure 10: Timing of Restarting System

3.5. Power Saving

Based on system requirements, there are several actions to drive the module to enter low current consumption status. For example, **AT+CFUN** can be used to set module into minimum functionality mode and DTR hardware interface signal can be used to lead system to SLEEP mode.

3.5.1. Minimum Functionality Mode

Minimum functionality mode reduces the functionality of the module to a minimum level. The consumption of the current can be minimized when the slow clocking mode is activated at the same time. The mode is set with the **AT+CFUN** command which provides the choice of the functionality levels <fun>=0, 1, 4.

- 0: minimum functionality
- 1: full functionality (default)
- 4: disable both transmitting and receiving of RF part

If the module is set to minimum functionality by **AT+CFUN=0**, the RF function and SIM card function would be disabled. In this case, the UART port is still accessible, but all AT commands related with RF function or SIM card function will be not available.

If the module has been set by the command with **AT+CFUN=4**, the RF function will be disabled, but the UART port is still active. In this case, all AT commands related with RF function will be not available.

After the module is set by **AT+CFUN=0** or **AT+CFUN=4**, it can return to full functionality by **AT+CFUN=1**.

For detailed information about **AT+CFUN**, please refer to the ***document [1]***.

Quectel Confidential

3.5.2. SLEEP Mode

The SLEEP mode is disabled by default. You can enable it by **AT+QSCLK=1**. On the other hand, the default setting is **AT+QSCLK=0** and in this mode, the module cannot enter SLEEP mode.

When the module is set by the command with **AT+QSCLK=1**, you can control the module to enter or exit from the SLEEP mode through pin DTR. When DTR is set to high level, and there is no on-air or hardware interrupt such as GPIO interrupt or data on UART port, the module will enter SLEEP mode automatically. In this mode, the module can still receive voice, SMS or GPRS paging from network, but the UART port does not work.

3.5.3. Wake Up Module From SLEEP Mode

When the module is in the SLEEP mode, the following methods can wake up the module.

- If the DTR Pin is set low, it would wake up the module from the SLEEP mode. The UART port will be active within 20ms after DTR is changed to low level.
- Receive a voice or data call from network wakes up module.
- Receive an SMS from network wakes up module.

NOTE

DTR pin should be held at low level during communication between the module and DTE.

3.5.4. Summary of State Transition

Table 6: Summary of State Transition

Current Mode	Next Mode		
	Power Down	**Normal Mode**	**Sleep Mode**
Power Down		Use PWRKEY	
Normal Mode	AT+QPOWD, use PWRKEY pin		Use AT command **AT+QSCLK=1** and pull up DTR
SLEEP Mode	Use PWRKEY pin	Pull DTR down or incoming call or SMS or GPRS	

Quectel Confidential

3.6. RTC Backup

The RTC (Real Time Clock) function is supported by M66 module. The RTC is designed to work with an internal power supply. If VBAT voltage is not present, a backup power supply such as a coin-cell battery (rechargeable or non-chargeable) or a super-cap can be used. The VRTC pin is voltage input for RTC and a 1.5K resistor is integrated in the module for peak current limit.

The following figures show various sample circuits for RTC backup.

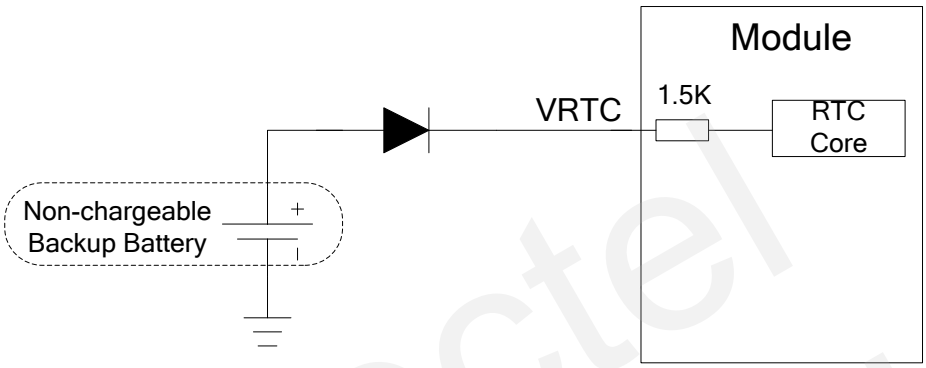

Figure 11: RTC Supply from a Non-chargeable Battery

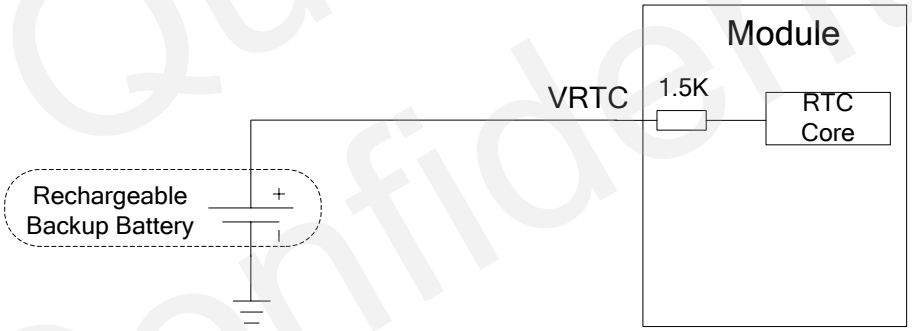

Figure 12: RTC Supply from a Rechargeable Battery

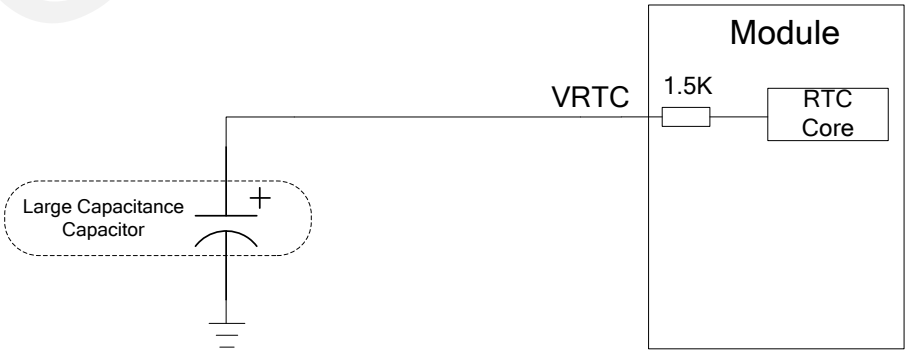

Figure 13: RTC Supply from a Capacitor

Quectel Confidential

The following figure shows the charging characteristics of a coin-type rechargeable battery XH414H-IV01E from Seiko.

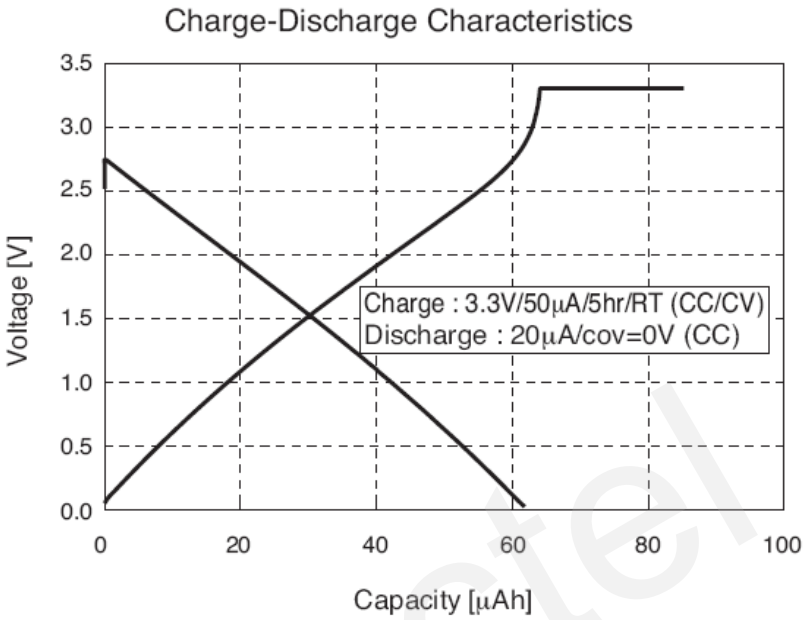

Figure 14: Charging Characteristics of Seiko's XH414H-IV01E

3.7. Serial Interfaces

The module provides three serial ports: UART Port, Debug Port and Auxiliary UART Port. The module is designed as a DCE (Data Communication Equipment), following the traditional DCE-DTE (Data Terminal Equipment) connection. Autobauding function supports baud rate from 4800bps to 115200bps.

The UART Port:

- TXD: Send data to RXD of DTE.
- RXD: Receive data from TXD of DTE.
- RTS: Request to send.
- CTS: Clear to send.
- DTR: DTE is ready and inform DCE (this pin can wake the module up).
- RI: Ring indicator (when the call, SMS, data of the module are coming, the module will output signal to inform DTE).
- DCD: Data carrier detection (the validity of this pin demonstrates the communication link is set up).

Quectel Confidential

NOTE

The module disables hardware flow control by default. When hardware flow control is required, RTS and CTS should be connected to the host. AT command **AT+IFC=2,2** is used to enable hardware flow control. AT command **AT+IFC=0,0** is used to disable the hardware flow control. For more details, please refer to the ***document [1]***.

The Debug Port:

- DBG_TXD: Send data to the COM port of computer.
- DBG_RXD: Receive data from the COM port of computer.

The Auxiliary UART Port:

- TXD_AUX: Send data to the RXD of DTE.
- RXD_AUX: Receive data from the TXD of DTE.

The logic levels are described in the following table.

Table 7: Logic Levels of the UART Interface

Parameter	Min.	Max.	Unit
V_{IL}	0	0.25×VDD_EXT	V
V_{IH}	0.75×VDD_EXT	VDD_EXT +0.3	V
V_{OL}	0	0.15×VDD_EXT	V
V_{OH}	0.85×VDD_EXT	VDD_EXT	V

Table 8: Pin Definition of the UART Interfaces

Interface	Pin No.	Pin Name	Description
UART Port	17	TXD	Transmit data
	18	RXD	Receive data
	19	DTR	Data terminal ready
	20	RI	Ring indication

Quectel Confidential

	21	DCD	Data carrier detection
	22	CTS	Clear to send
	23	RTS	Request to send
Debug Port	38	DBG_RXD	Receive data
	39	DBG_TXD	Transmit data
Auxiliary UART Port	28	RXD_AUX	Receive data
	29	TXD_AUX	Transmit data

3.7.1. UART Port

3.7.1.1. The Feature of UART Port

- Seven lines on UART interface
- Contain data lines TXD and RXD, hardware flow control lines RTS and CTS, other control lines DTR, DCD and RI.
- Used for AT command, GPRS data, etc. Multiplexing function is supported on the UART Port. So far only the basic mode of multiplexing is available.
- Support the communication baud rates as the following:
  300, 600, 1200, 2400, 4800, 9600, 14400, 19200, 28800, 38400, 57600, 115200.
- The default setting is autobauding mode. Support the following baud rates for Autobauding function: 4800, 9600, 19200, 38400, 57600, 115200.
- The module disables hardware flow control by default. AT command **AT+IFC=2,2** is used to enable hardware flow control.

After setting a fixed baud rate or autobauding, please send "**AT**" string at that rate. The UART port is ready when it responds "**OK**".

Autobauding allows the module to detect the baud rate by receiving the string "**AT**" or "**at**" from the host or PC automatically, which gives module flexibility without considering which baud rate is used by the host controller. Autobauding is enabled by default. To take advantage of the autobauding mode, special attention should be paid according to the following requirements:

Synchronization between DTE and DCE:

When DCE (the module) powers on with the autobauding enabled, it is recommended to wait 2 to 3 seconds before sending the first AT character. After receiving the "**OK**" response, DTE and DCE are correctly synchronized.

Quectel Confidential

If the host controller needs URC in the mode of autobauding, it must be synchronized firstly. Otherwise the URC will be discarded.

Restrictions on autobauding operation:

- The UART port has to be operated at 8 data bits, no parity and 1 stop bit (factory setting).
- The "**At**" and "**aT**" commands cannot be used.
- Only the strings "**AT**" or "**at**" can be detected (neither "**At**" nor "**aT**").
- The Unsolicited Result Codes like **RDY**, **+CFUN: 1** and **+CPIN: READY** will not be indicated when the module is turned on with autobauding enabled and not be synchronized.
- Any other Unsolicited Result Codes will be sent at the previous baud rate before the module detects the new baud rate by receiving the first "**AT**" or "**at**" string. The DTE may receive unknown characters after switching to new baud rate.
- It is not recommended to switch to autobauding from a fixed baud rate.
- If autobauding is active it is not recommended to switch to multiplex mode.

NOTE

To assure reliable communication and avoid any problems caused by undetermined baud rate between DCE and DTE, it is strongly recommended to configure a fixed baud rate and save it instead of using autobauding after start-up. For more details, please refer to the Section **AT+IPR** in ***document [1]***.

Quectel Confidential

3.7.1.2. The Connection of UART

The connection between module and host using UART Port is very flexible. Three connection styles are illustrated as below.

Reference design for Full-Function UART connection is shown as below when it is applied in modulation-demodulation.

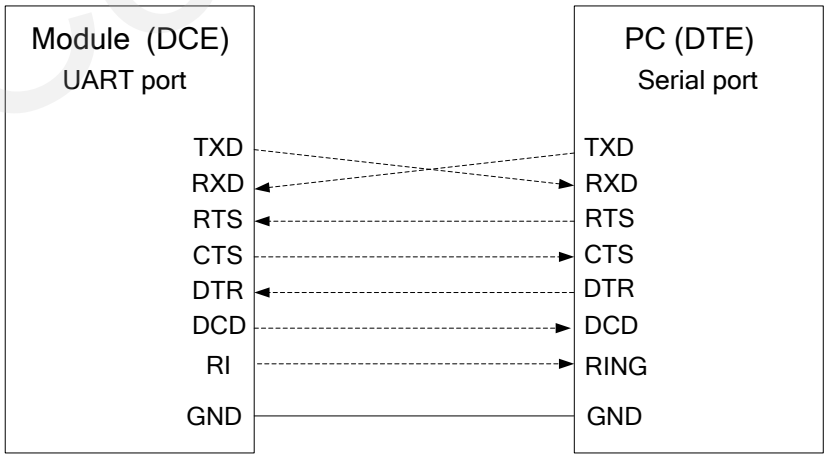

Figure 15: Reference Design for Full-Function UART

Three-line connection is shown as below.

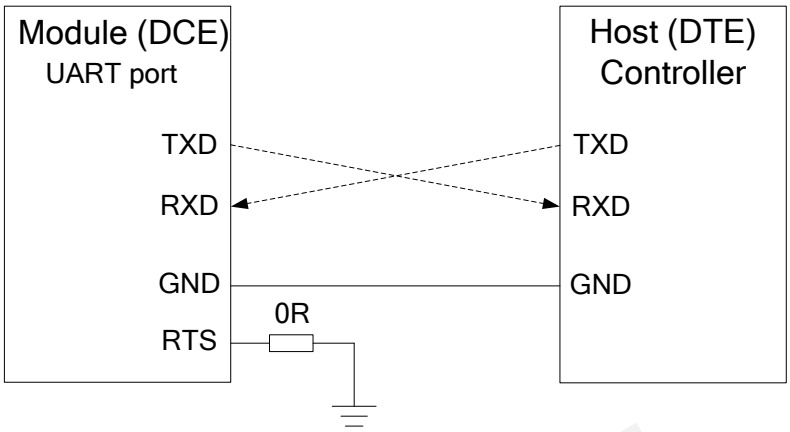

Figure 16: Reference Design for UART Port

UART Port with hardware flow control is shown as below. This connection will enhance the reliability of the mass data communication.

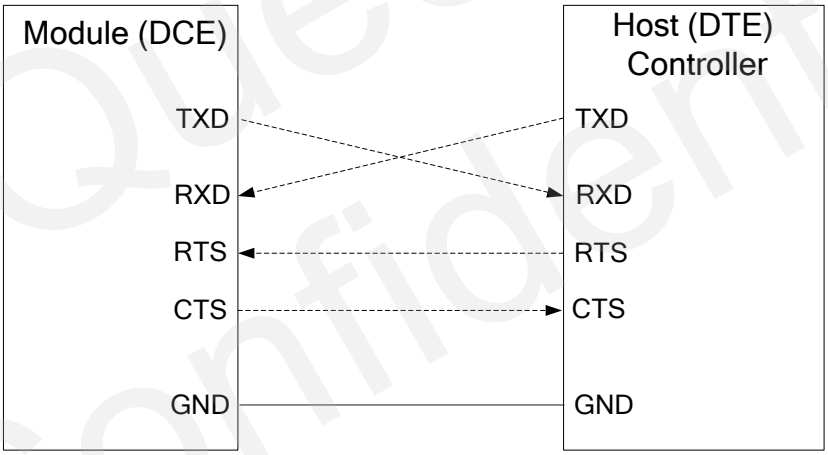

Figure 17: Reference Design for UART Port with Hardware Flow Control

3.7.1.3. Firmware Upgrade

The TXD, RXD can be used to upgrade firmware. The PWRKEY pin must be pulled down before firmware upgrade. The reference circuit is shown as below:

Quectel Confidential

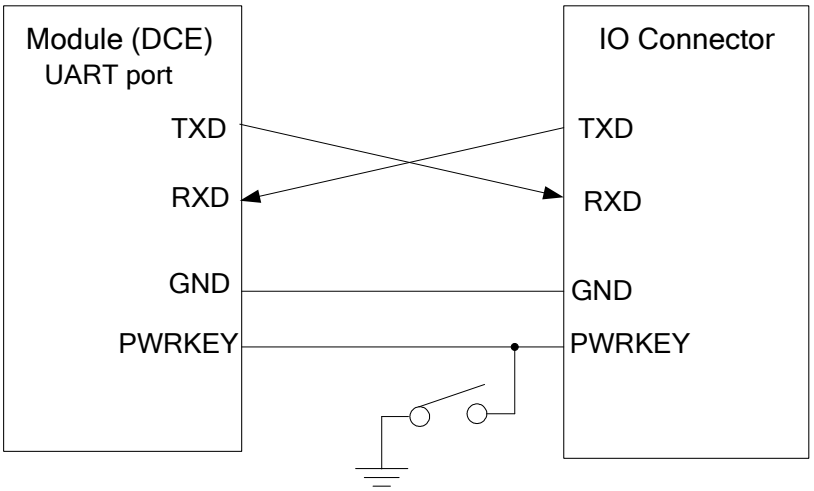

Figure 18: Reference Design for Firmware Upgrade

NOTE

The firmware of module might need to be upgraded due to certain reasons. It is recommended to reserve these pins in the host board for firmware upgrade. For detailed design, please refer to the ***document [11]***.

3.7.2. Debug Port

- Two lines: DBG_TXD and DBG_RXD.
- It outputs log information automatically.
- Debug Port is only used for firmware debugging and its baud rate must be configured as 460800bps.

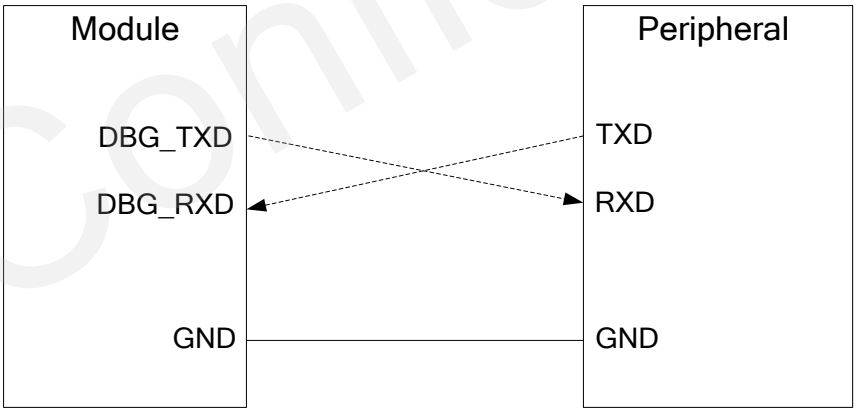

Figure 19: Reference Design for Debug Port

Quectel Confidential

3.7.3. Auxiliary UART Port

- Two data lines: TXD_AUX and RXD_AUX.
- Auxiliary UART port is used for AT command only and does not support GPRS data, Multiplexing function etc.
- Auxiliary UART port supports the communication baud rates as the following:
  1200, 2400, 4800, 9600, 14400, 19200, 28800, 38400, 57600, 115200.
- Auxiliary UART port could be used when you send **AT+QEAUART=1** string on the UART port.
- The default baud rate setting is 115200bps, and does not support autobauding. The baud rate can be modified by **AT+QSEDCB** command. For more details, please refer to the ***document [1]*.**

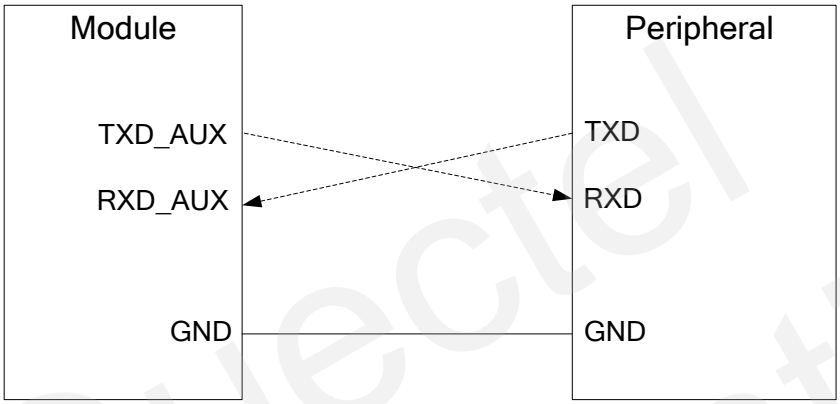

Figure 20: Reference Design for Auxiliary UART Port

3.7.4. UART Application

The reference design of 3.3V level match is shown as below. If the host is a 3V system, please change the 5.6K resistor to 10K.

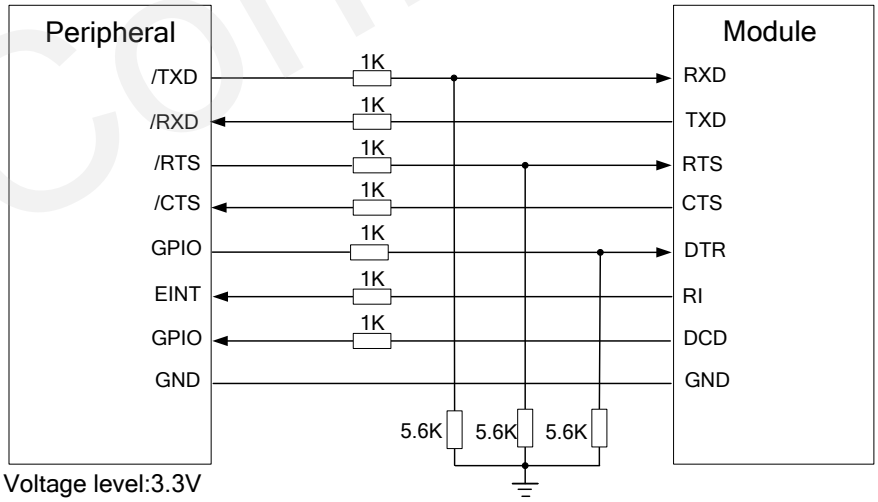

Figure 21: Level Match Design for 3.3V System

Quectel Confidential

The following circuit shows a reference design for the communication between module and PC. Since the electrical level of module is 2.8V, so a RS-232 level shifter must be used.

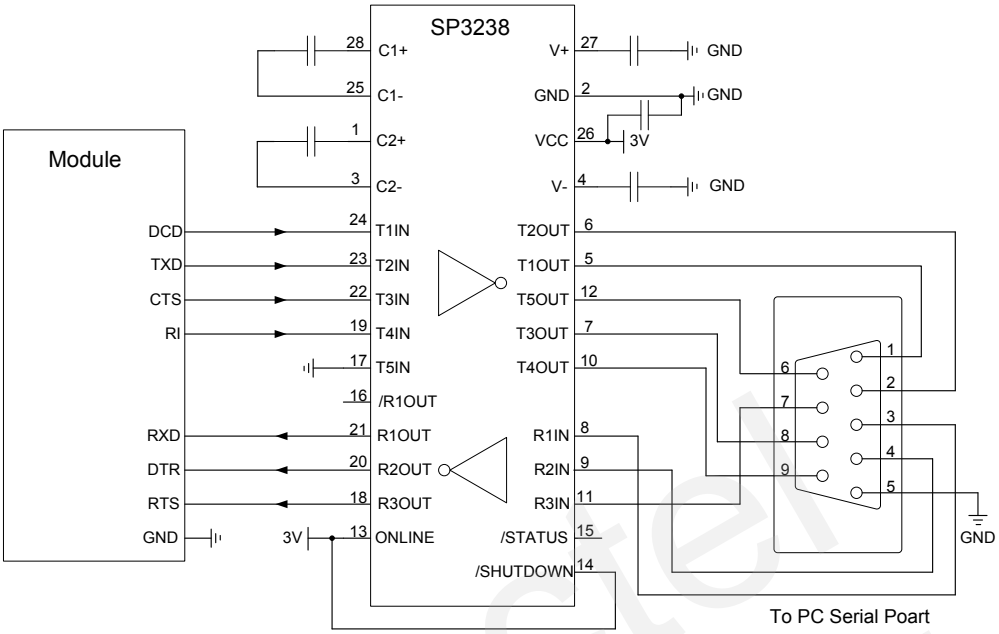

Figure 22: Level Match Design for RS-232

3.8. Audio Interfaces

The module provides one analogy input channels and two analogy output channels.

Table 9: Pin Definition of Audio Interface

Interface	Name	Pin NO.	Description
AIN/AOUT1	MICP	3	Microphone positive input
	MICN	4	Microphone negative input
	SPK1P	5	Channel 1 Audio positive output
	SPK1N	6	Channel 1 Audio negative output
AIN/AOUT2	MICP	3	Microphone positive input
	MICN	4	Microphone negative input
	SPK2P	2	Channel 2 Audio positive output
	AGND	1	Form a pseudo-differential pair with SPK2P

Quectel Confidential

AIN can be used for input of microphone and line. An electret microphone is usually used. AIN are differential input channels.

AOUT1 is used for output of the receiver. This channel is typically used for a receiver built into a handset. AOUT1 channel is a differential channel.

AOUT2 is typically used with earphone. It is a single-ended and mono channel. SPK2P and AGND can establish a pseudo differential mode.

All of these three audio channels support voice and ringtone output, and so on, and can be switched by **AT+QAUDCH** command. For more details, please refer to the ***document [1]***.

Use AT command **AT+QAUDCH** to select audio channel:

- 0--AIN/AOUT1, the default value is 0.
- 1--AIN/AOUT2, this channel is always used for earphone.

For each channel, you can use **AT+QMIC** to adjust the input gain level of microphone. You can also use **AT+CLVL** to adjust the output gain level of receiver and speaker. **AT+QSIDET** is used to set the side-tone gain level. For more details, please refer to the ***document [1]***.

3.8.1. Decrease TDD Noise and other Noise

The 33pF capacitor is applied for filtering out 900MHz RF interference when the module is transmitting at GSM900MHz. Without placing this capacitor, TDD noise could be heard. Moreover, the 10pF capacitor here is for filtering out 1800MHz RF interference. However, the resonant frequency point of a capacitor largely depends on the material and production technique. Therefore, customer would have to discuss with its capacitor vendor to choose the most suitable capacitor for filtering out GSM850MHz, GSM900MHz, DCS1800MHz and PCS1900MHz separately.

The severity degree of the RF interference in the voice channel during GSM transmitting period largely depends on the application design. In some cases, GSM900 TDD noise is more severe; while in other cases, DCS1800 TDD noise is more obvious. Therefore, you can have a choice based on test results. Sometimes, even no RF filtering capacitor is required.

The capacitor which is used for filtering out RF noise should be close to audio interface or other audio interfaces. Audio alignment should be as short as possible.

In order to decrease radio or other signal interference, the position of RF antenna should be kept away from audio interface and audio alignment. Power alignment and audio alignment should not be parallel, and power alignment should be far away from audio alignment.

The differential audio traces have to be placed according to the differential signal layout rule.

Quectel Confidential

3.8.2. Microphone Interfaces Design

AIN channel come with internal bias supply for external electret microphone. A reference circuit is shown in the following figure.

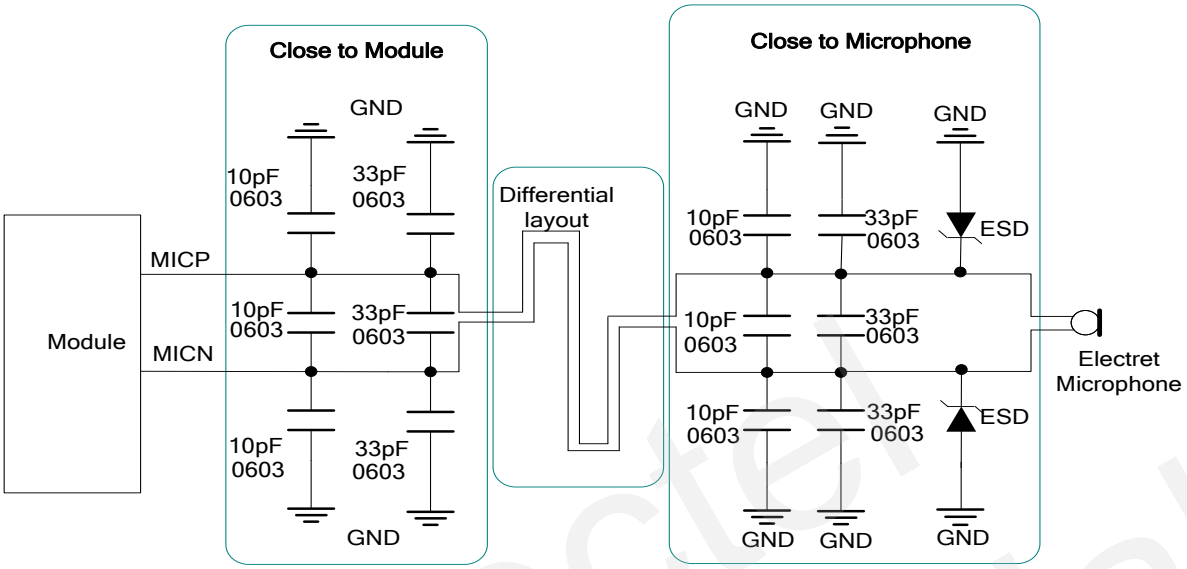

Figure 23: Reference Design for AIN

3.8.3. Receiver and Speaker Interface Design

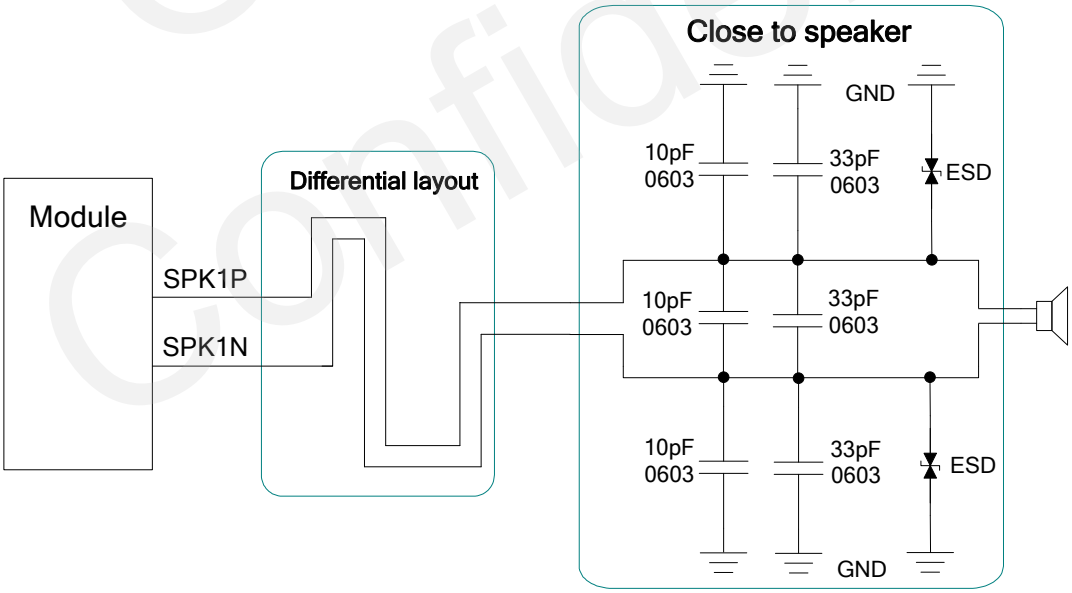

Figure 24: Reference Design for AOUT1

Quectel Confidential

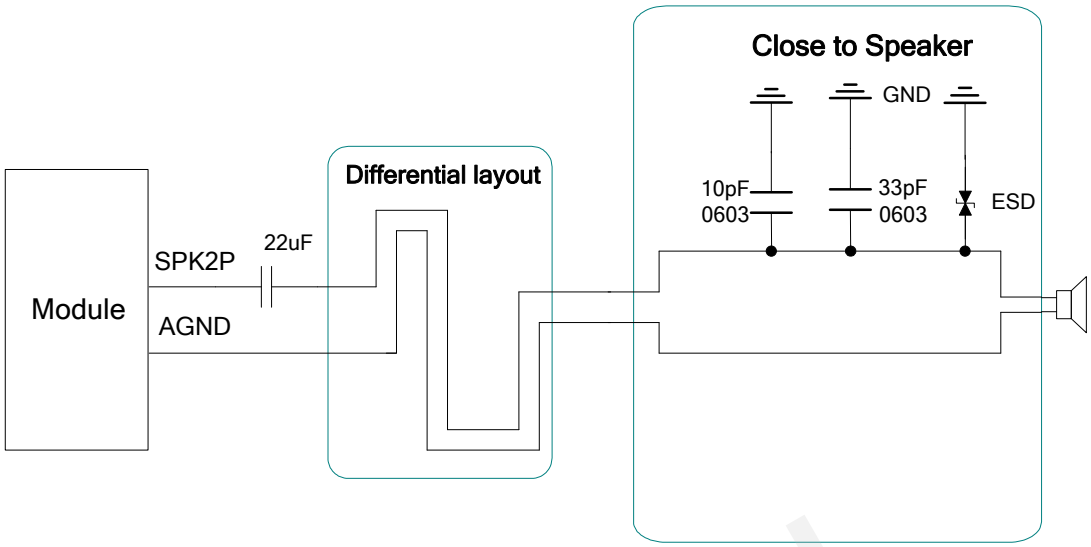

Figure 25: Handset Interface Design for AOUT2

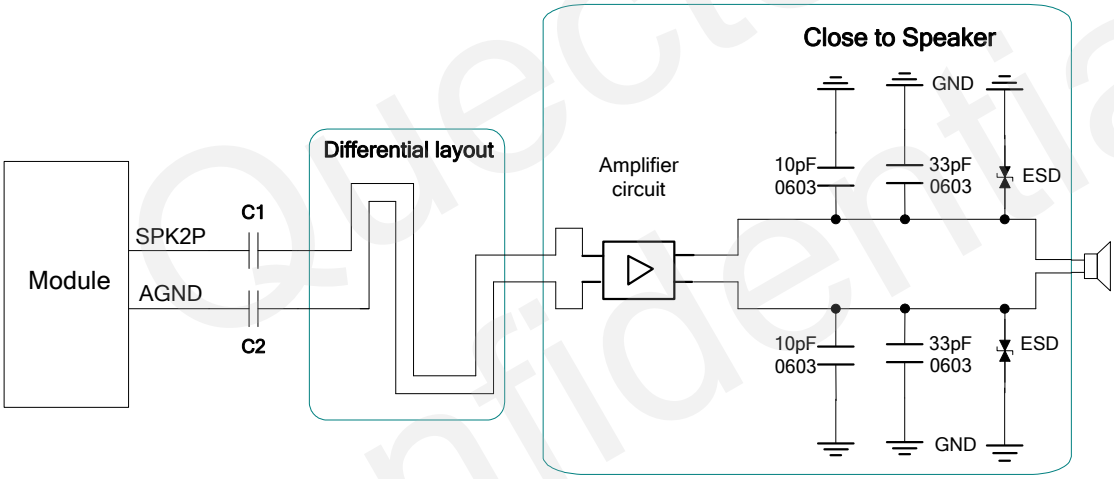

Figure 26: Speaker Interface Design with an Amplifier for AOUT2

Texas Instrument's TPA6205A1 is recommended for a suitable differential audio amplifier. There are plenty of excellent audio amplifiers in the market.

NOTE

The value of C1 and C2 here depends on the input impedance of audio amplifier.

Quectel Confidential

3.8.4. Earphone Interface Design

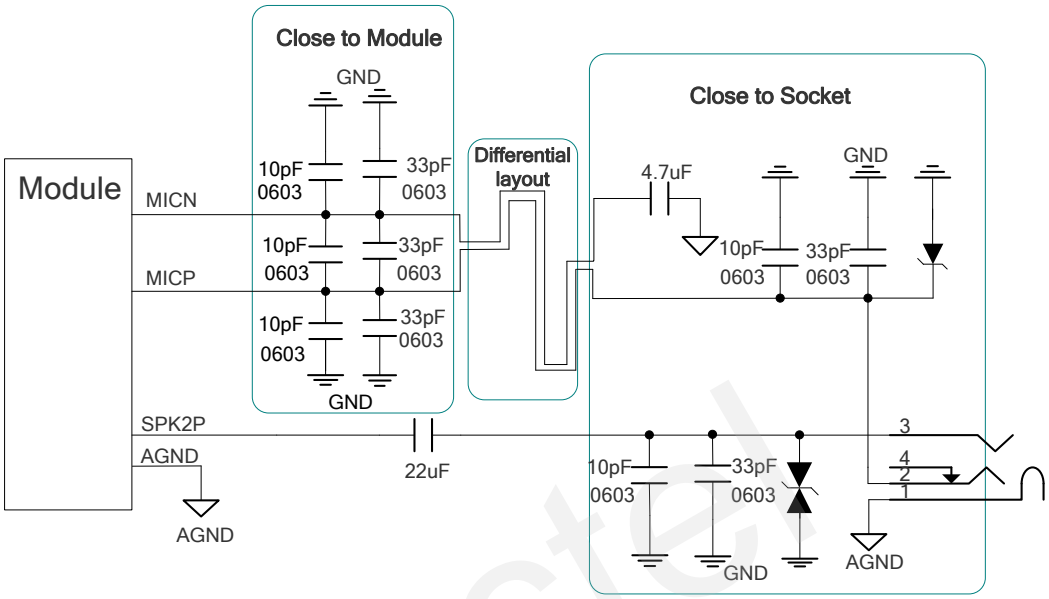

Figure 27: Earphone Interface Design

3.8.5. Audio Characteristics

Table 10: Typical Electret Microphone Characteristics

Parameter	Min.	Typ.	Max.	Unit
Working Voltage	1.2	1.5	2.0	V
Working Current	200		500	uA
External Microphone Load Resistance		2.2		k Ohm

Table 11: Typical Speaker Characteristics

Parameter			Min.	Typ.	Max.	Unit
AOUT1 Output	Single-ended	Load resistance		32		Ohm
		Ref level	0		2.4	Vpp
	Differential	Load resistance		32		Ohm
		Ref level	0		4.8	Vpp

Quectel Confidential

AOUT2 Output	Single-ended	Load resistance		32		Load Resistance
		Reference level	0		2.4	Vpp

3.9. PCM Interface

M66 supports PCM interface. It is used for digital audio transmission between the module and the device. This interface is composed of PCM_CLK, PCM_SYNC, PCM_IN and PCM_OUT signal lines.

Pulse-code modulation (PCM) is a converter that changes the consecutive analog audio signal to discrete digital signal. The whole procedure of Pulse-code modulation contains sampling, quantizing and encoding.

Table 12: Pin Definition of PCM Interface

Pin NO.	Pin Name	Description
30	PCM_CLK	PCM clock output
31	PCM_SYNC	PCM frame synchronization output
32	PCM_IN	PCM data input
33	PCM_OUT	PCM data output

3.9.1. Configuration

M66 module supports 13-bit line code PCM format. The sample rate is 8 KHz, and the clock source is 256 KHz, and the module can only act as master mode. The PCM interface supports both long and short synchronization simultaneously. Furthermore, it only supports MSB first. For detailed information, please refer to the table below.

Table 13: Configuration

PCM	
Line Interface Format	Linear
Data Length	Linear: 13 bits

Quectel Confidential

Sample Rate	8KHz
PCM Clock/Synchronization Source	PCM master mode: clock and synchronization is generated by module
PCM Synchronization Rate	8KHz
PCM Clock Rate	PCM master mode: 256 KHz (line)
PCM Synchronization Format	Long/short synchronization
PCM Data Ordering	MSB first
Zero Padding	Yes
Sign Extension	Yes

3.9.2. Timing

The sample rate of the PCM interface is 8 KHz and the clock source is 256 KHz, so every frame contains 32 bits data, since M66 supports 16 bits line code PCM format, the left 16 bits are invalid. The following diagram shows the timing of different combinations. The synchronization length in long synchronization format can be programmed by firmware from one bit to eight bits. In the Sign extension mode, the high three bits of 16 bits are sign extension, and in the Zero padding mode, the low three bits of 16 bits are zero padding.

Under zero padding mode, you can configure the PCM input and output volume by executing **AT+QPCMVOL** command. For more details, please refer to ***Chapter 3.9.4***.

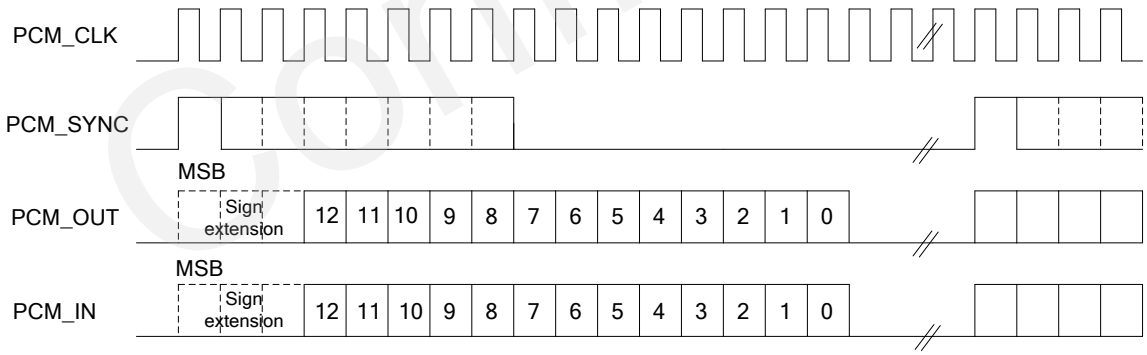

Figure 28: Long Synchronization & Sign Extension Diagram

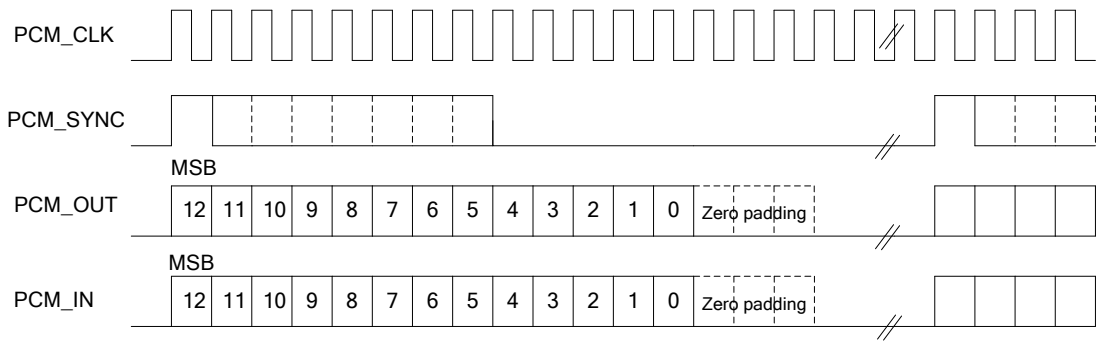

Figure 29: Long Synchronization & Zero Padding Diagram

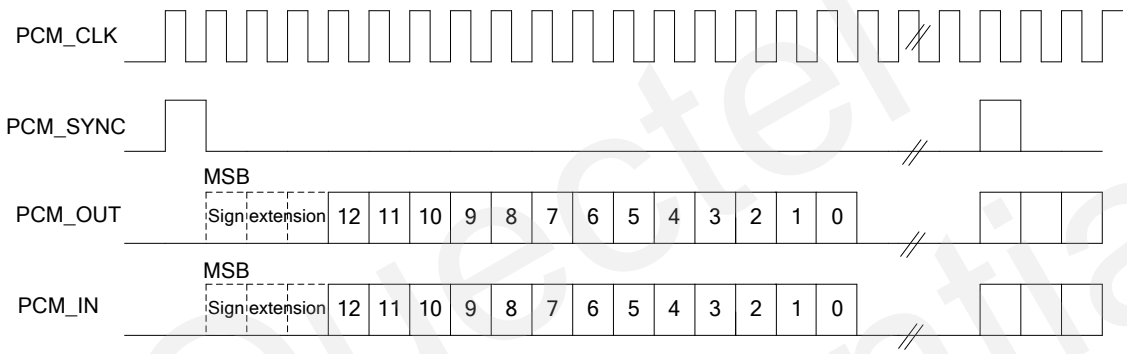

Figure 30: Short Synchronization & Sign Extension Diagram

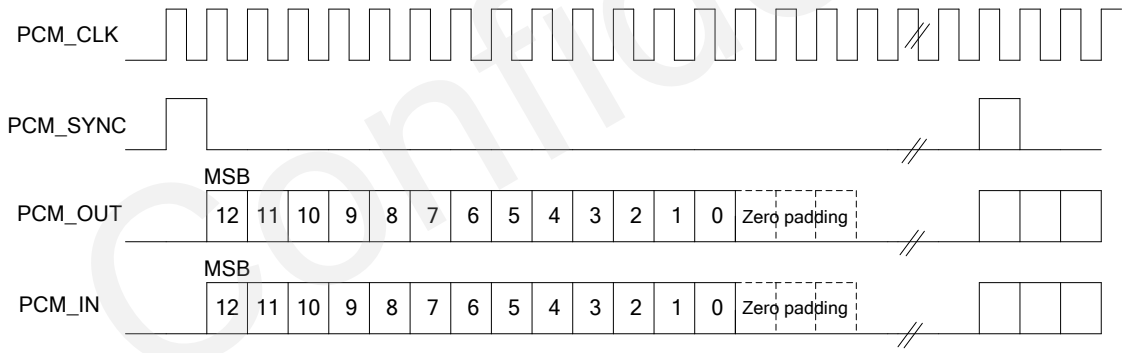

Figure 31: Short Synchronization & Zero Padding Diagram

3.9.3. Reference Design

M66 can only work as a master, providing synchronization and clock source. The reference design is shown as below.

Quectel Confidential

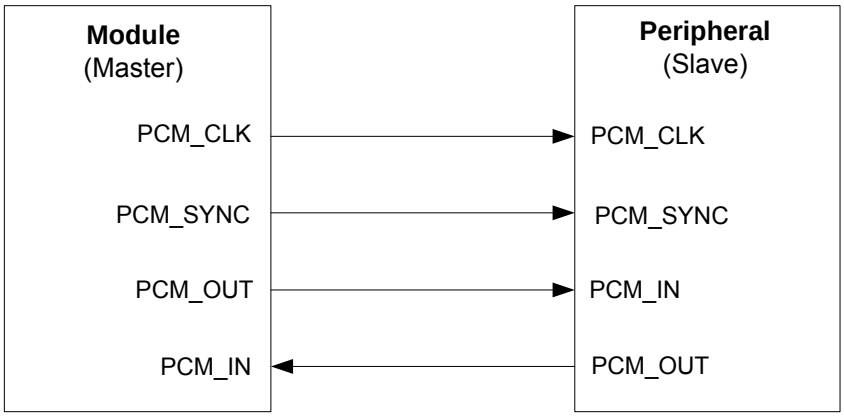

Figure 32: Reference Design for PCM

3.9.4. AT Command

There are two AT commands about the configuration of PCM, listed as below.

AT+QPCMON can configure operating mode of PCM.

AT+QPCMON=mode, Sync_Type, Sync_Length, SignExtension, MSBFirst.

Table 14: QPCMON Command Description

Parameter	Scope	Description
Mode	0~2	0: Close PCM 1: Open PCM 2: Open PCM when audio talk is set up
Sync_Type	0~1	0: Short synchronization 1: Long synchronization
Sync_Length	1~8	Programmed from one bit to eight bit
SignExtension	0~1	0: Zero padding 1: Sign extension
MSBFirst	0~1	0: MSB first 1: Not support

AT+QPCMVOL can configure the volume of input and output.

AT+QPCMVOL=vol_pcm_in, vol_pcm_out

Quectel Confidential

Table 15: QPCMVOL Command Description

Parameter	Scope	Description
vol_pcm_in	0~32767	Set the input volume
vol_pcm_out	0~32767	Set the output volume The voice may be distorted when this value exceeds 16384.

3.10. SIM Card Interface

3.10.1. SIM Card Application

The SIM interface supports the functionality of the GSM Phase 1 specification and also supports the functionality of the new GSM Phase 2+ specification for FAST 64 kbps SIM card, which is intended for use with a SIM application Tool-kit.

The SIM interface is powered by an internal regulator in the module. Both 1.8V and 3.0V SIM Cards are supported.

Table 16: Pin Definition of the SIM Interface

Pin NO.	Name	Description
14	SIM_VDD	Supply power for SIM card. Automatic detection of SIM card voltage. 3.0V±5% and 1.8V±5%. Maximum supply current is around 10mA.
13	SIM_CLK	SIM card clock.
11	SIM_DATA	SIM card data I/O.
12	SIM_RST	SIM card reset.
10	SIM_GND	SIM card ground.

Quectel Confidential

The reference circuit for a 6-pin SIM card socket is illustrated as the following figure.

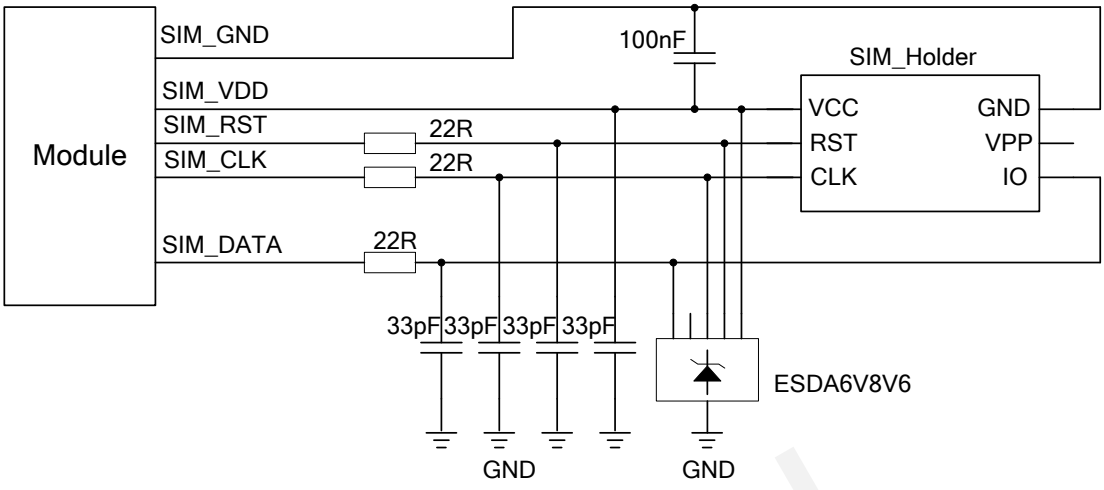

Figure 33: Reference Circuit for SIM Interface with the 6-pin SIM Card Holder

In order to enhance the reliability and availability of the SIM card in application. Please follow the below criteria in the SIM circuit design:

- Keep layout of SIM card as close as possible to the module. Assure the possibility of the length of the trace is less than 200mm.
- Keep SIM card signal away from RF and VBAT alignment.
- Assure the ground between module and SIM cassette short and wide. Keep the width of ground no less than 0.5mm to maintain the same electric potential. The decouple capacitor of SIM_VDD is less than 1uF and must be near to SIM cassette.
- To avoid cross talk between SIM_DATA and SIM_CLK. Keep them away with each other and shield them with surrounded ground
- In order to offer good ESD protection, it is recommended to add TVS such as WILL (http://www.willsemi.com) ESDA6V8AV6. The 22Ω resistors should be added in series between the module and the SIM card so as to suppress the EMI spurious transmission and enhance the ESD protection. Please to be noted that the SIM peripheral circuit should be close to the SIM card socket.
- Place the RF bypass capacitors (33pF) close to the SIM card on all signals line for improving EMI.

Quectel Confidential

3.10.2. 6-Pin SIM Cassette

As to the 6-pin SIM card holder, it is recommended to use Amphenol C707 10M006 512 2. Please visit http://www.amphenol.com for more information.

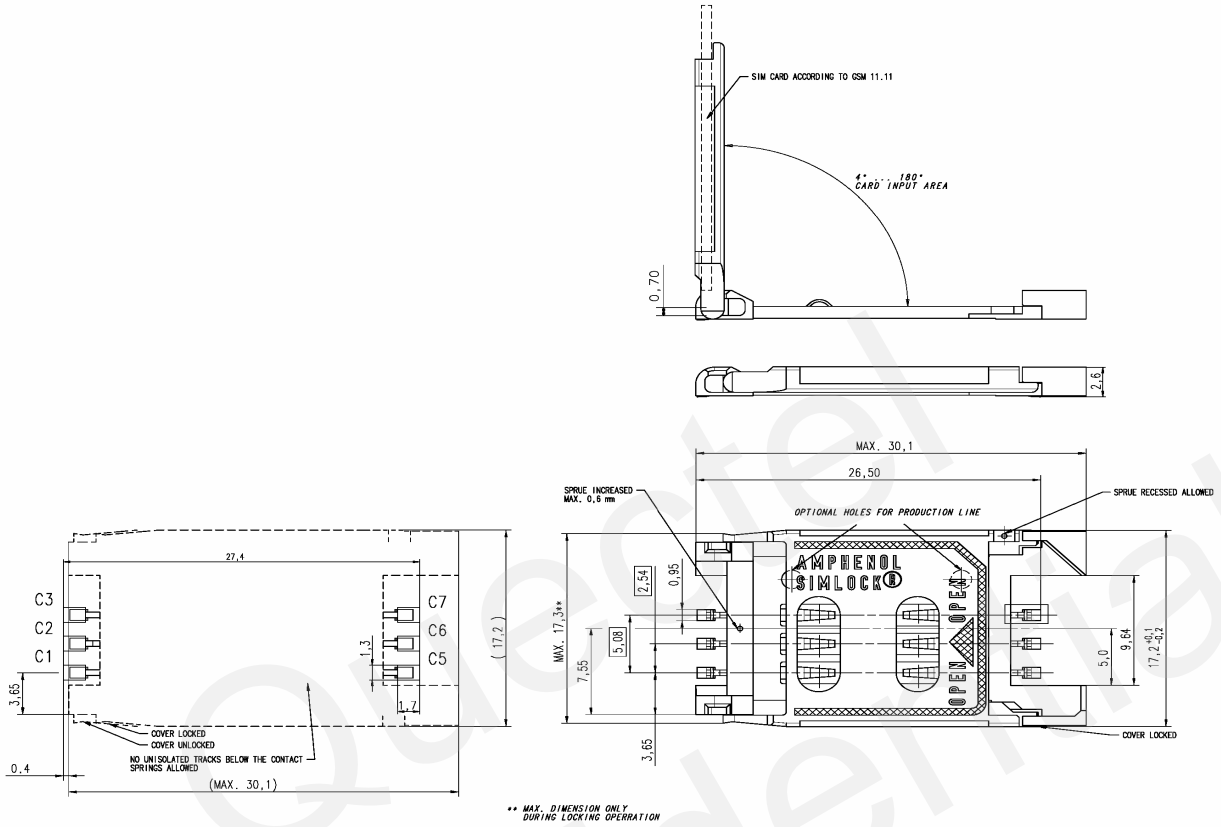

Figure 34: Amphenol C707 10M006 512 2 SIM Card Holder

Table 17: Pin Description of Amphenol SIM Card Holder

Name	Pin	Description
SIM_VDD	C1	SIM card power supply
SIM_RST	C2	SIM card reset
SIM_CLK	C3	SIM card clock
GND	C5	Ground
VPP	C6	Not connected
SIM_DATA	C7	SIM card data I/O

Quectel Confidential

3.11. ADC

The module provides an ADC channel to measure the value of voltage. Please give priority to the use of ADC0 channel. The command **AT+QADC** can read the voltage value applied on ADC0 pin. For details of this AT command, please refer to the ***document [1]***. In order to improve the accuracy of ADC, the layout of ADC should be surrounded by ground.

Table 18: Pin Definition of the ADC

Pin NO.	Pin Name	Description
8	AVDD	Reference voltage of ADC circuit
9	ADC0	Analog to digital converter.

Table 19: Characteristics of the ADC

Item	Min.	Typ.	Max.	Units
Voltage Range	0		2.8	V
ADC Resolution		10		bits
ADC Accuracy		2.7		mV

3.12. Behaviors of The RI

Table 20: Behaviors of the RI

State	RI Response
Standby	HIGH
Voicecall	Change to LOW, then: 1. Change to HIGH when call is established. 2. Use ATH to hang up the call, RI changes to HIGH. 3. Calling part hangs up, RI changes to HIGH first, and changes to LOW for 120ms indicating “NO CARRIER” as an URC, then changes to HIGH again. 4. Change to HIGH when SMS is received.
SMS	When a new SMS comes, the RI changes to LOW and holds low level for about

Quectel Confidential

	120ms, then changes to HIGH.
URC	Certain URCs can trigger 120ms low level on RI. For more details, please refer to the ***document [1]***

If the module is used as a caller, the RI would maintain high except the URC or SMS is received. On the other hand, when it is used as a receiver, the timing of the RI is shown below.

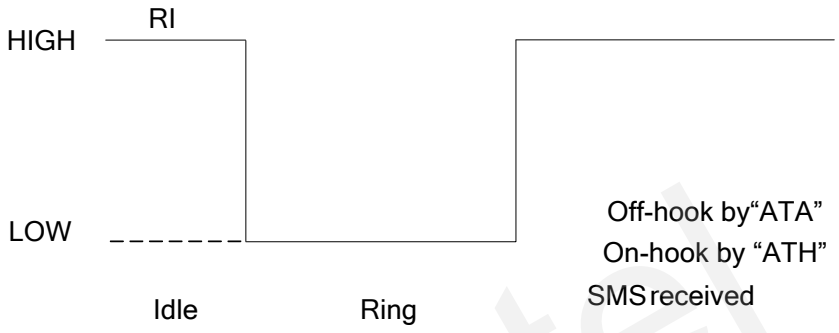

Figure 35: RI Behavior of Voice Calling as a Receiver

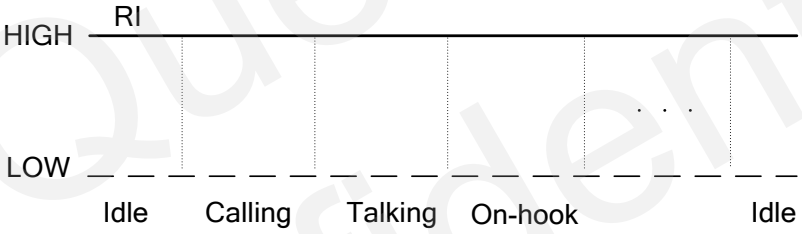

Figure 36: RI Behavior as a Caller

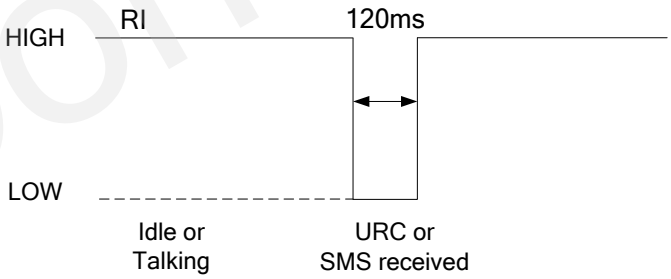

Figure 37: RI Behavior of URC or SMS Received

Quectel Confidential

3.13. Network Status Indication

The NETLIGHT signal can be used to drive a network status indicator LED. The working state of this pin is listed in the following table.

Table 21: Working State of the NETLIGHT

State	Module Function
Off	The module is not running.
64ms On/800ms Off	The module is not synchronized with network.
64ms On/2000ms Off	The module is synchronized with network.
64ms On/600ms Off	The GPRS data transmission after dialing the PPP connection.

A reference circuit is shown as below.

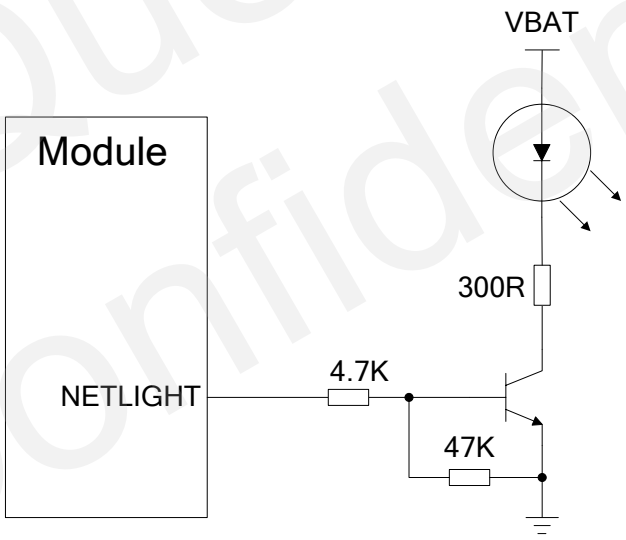

Figure 38: Reference Design for NETLIGHT

Quectel Confidential

3.14. RF Transmitting Signal Indication

RFTXMON will output a high level to indicate the RF transmission, 220us later GSM will transmit burst.

Table 22: Pin Definition of the RFTXMON

Name	Pin	Description
RFTXMON	25	Transmission signal indication

You can execute **AT+QCFG="RFTXburst", 1** to enable the function.

The timing of the RFTXMON signal is shown below.

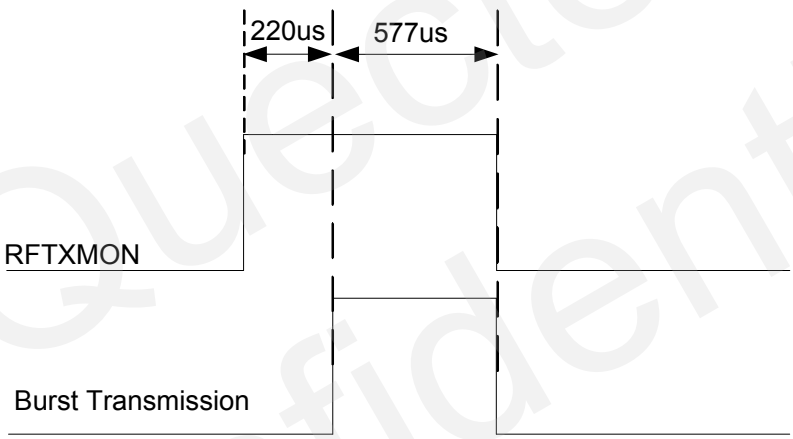

Figure 39: RFTXMON Signal during Burst Transmission

Quectel Confidential

4 Antenna Interface

M66 have two antenna interfaces, GSM antenna and BT antenna. The Pin 26 is the Bluetooth antenna pad. The Pin 35 is the GSM antenna pad. The RF interface of the two antenna pad has an impedance of 50Ω.

4.1. GSM Antenna Interface

There is a GSM antenna pad named RF_ANT for M66.

Table 23: Pin Definition of the RF_ANT

Name	Pin	Description
GND	34	Ground
RF_ANT	35	GSM antenna pad
GND	36	Ground
GND	37	Ground

4.1.1. Reference Design

The external antenna must be matched properly to achieve best performance, so the matching circuit is necessary, the reference design for RF is shown as below.

Quectel Confidential

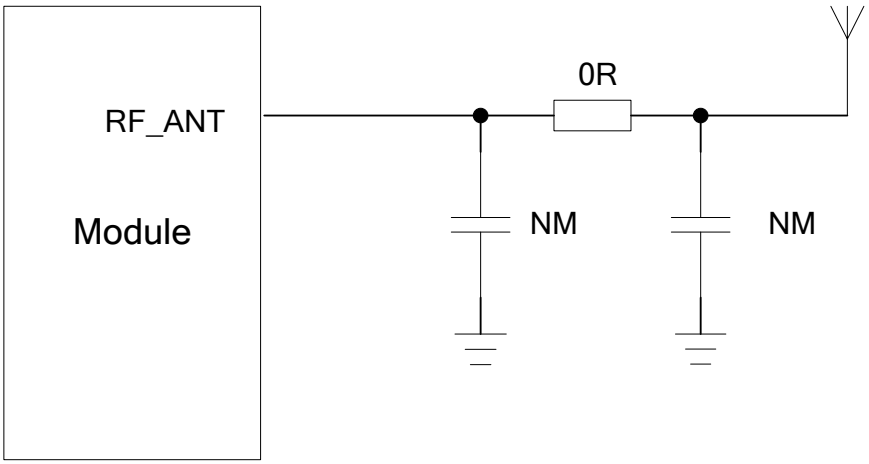

Figure 40: Reference Design for GSM Antenna

M66 provides an RF antenna pad for antenna connection. The RF trace in host PCB connected to the module RF antenna pad should be coplanar waveguide line or microstrip line, whose characteristic impedance should be close to 50Ω. M66 comes with grounding pads which are next to the antenna pad in order to give a better grounding. Besides, a π type match circuit is suggested to be used to adjust the RF performance.

To minimize the loss on the RF trace and RF cable, take design into account carefully. The following table shows the requirement on GSM antenna.

Table 24: Antenna Cable Requirements

Type	Requirements
GSM850/EGSM900	Cable insertion loss <1dB
DCS1800/PCS1900	Cable insertion loss <1.5dB

Table 25: Antenna Requirements

Type	Requirements
Frequency Range	Depending by frequency band (s) provided by the network operator
VSWR	≤ 2
Gain (dBi)	3
Max Input Power (W)	50

Quectel Confidential

Input Impedance (Ω)	50
Polarization Type	Vertical

4.1.2. RF Output Power

Table 26: The Module Conducted RF Output Power

Frequency	Max.	Min.
GSM850	33dBm±2dB	5dBm±5dB
EGSM900	33dBm±2dB	5dBm±5dB
DCS1800	30dBm±2dB	0dBm±5dB
PCS1900	30dBm±2dB	0dBm±5dB

NOTE

In GPRS 4 slots TX mode, the max output power is reduced by 2.5dB. This design conforms to the GSM specification as described in section ***13.16*** of ***3GPP TS 51.010-1***.

4.1.3. RF Receiving Sensitivity

Table 27: The Module Conducted RF Receiving Sensitivity

Frequency	Receive Sensitivity
GSM850	< -109dBm
EGSM900	< -109dBm
DCS1800	< -109dBm
PCS1900	< -109dBm

Quectel Confidential

4.1.4. Operating Frequencies

Table 28: The Module Operating Frequencies

Frequency	Receive	Transmit	ARFCH
GSM850	869~894MHz	824~849MHz	128~251
EGSM900	925~960MHz	880~915MHz	0~124, 975~1023
DCS1800	1805~1880MHz	1710~1785MHz	512~885
PCS1900	1930~1990MHz	1850~1910MHz	512~810

4.1.5. RF Cable Soldering

Soldering the RF cable to RF pad of module correctly will reduce the loss on the path of RF, please refer to the following example of RF soldering.

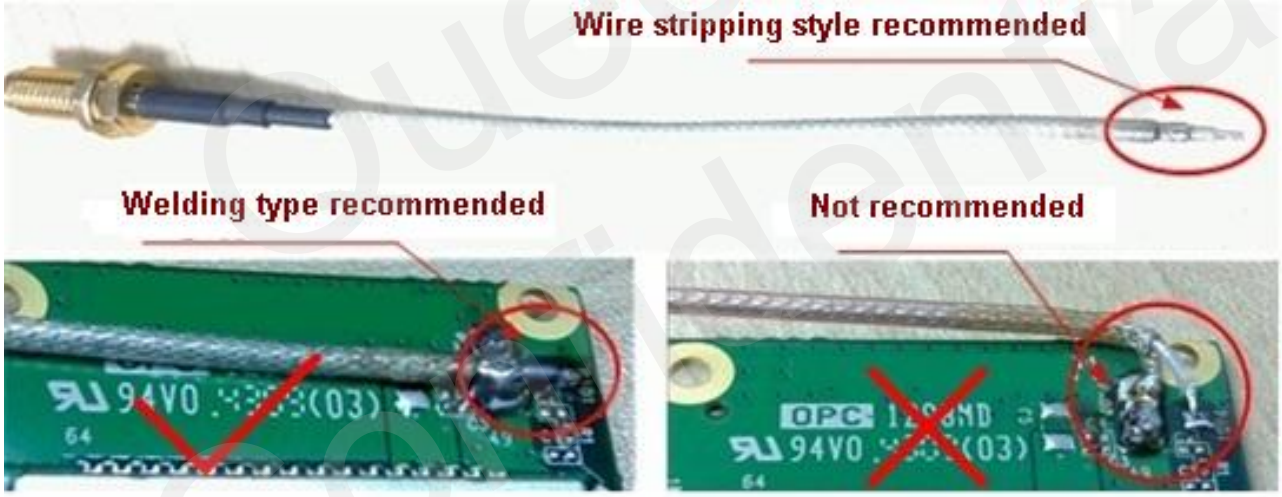

Figure 41: RF Soldering Sample

4.2. Bluetooth Antenna Interface

M66 supports Bluetooth interface. Bluetooth is a wireless technology that allows devices to communicate, or transmit date or voice, wirelessly over a short distance. It is described as a short-range communication technology intended to replace the cables connecting portable and/or fixed devices while maintaining high level of security. Bluetooth is standardized as IEEE802.15 and operates in the 2.4 GHz range using RF technology.Its bandwidth is 1Mb/s.

Quectel Confidential

M66 is fully compliant with Bluetooth specification 3.0. M66 supports profile including SPP, OPP and HFP.

The module provides a Bluetooth antenna pad named BT_ANT.

Table 29: Pin Definition of the BT_ANT

Name	Pin	Description
BT_ANT	26	BT antenna pad
GND	27	Ground

The external antenna must be matched properly to achieve best performance, so the matching circuit is necessary, the connection is recommended as in the following figure:

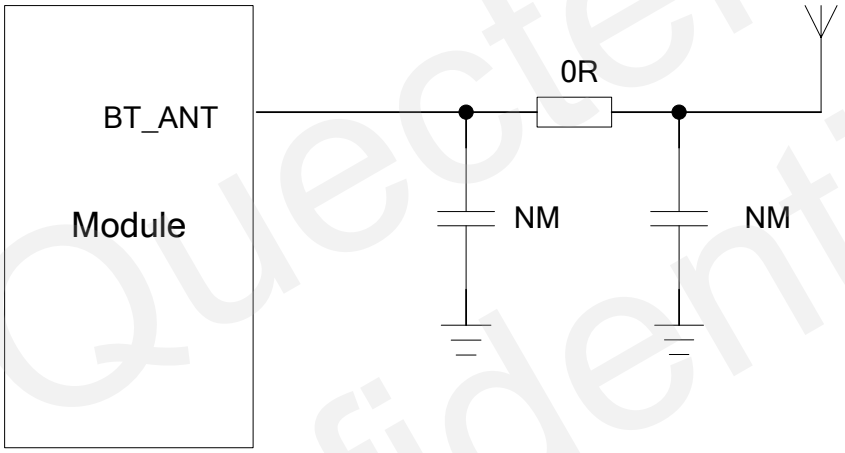

Figure 42: Reference Design for Bluetooth Antenna

There are some suggestions for placing components and RF trace lying for Bluetooth RF traces:

- Antenna matching circuit should be closed to the antenna;
- Keep the RF traces as 50Ω;
- The RF traces should be kept far away from the high frequency signals and strong disturbing source.

Quectel Confidential

5 Electrical, Reliability and Radio Characteristics

5.1. Absolute Maximum Ratings

Absolute maximum ratings for power supply and voltage on digital and analog pins of module are listed in the following table:

Table 30: Absolute Maximum Ratings

Parameter	Min.	Max.	Unit
VBAT	-0.3	+4.73	V
Peak Current of Power Supply	0	2	A
RMS Current of Power Supply (during one TDMA- frame)	0	0.7	A
Voltage at Digital Pins	-0.3	3.08	V
Voltage at Analog Pins	-0.3	3.08	V
Voltage at Digital/analog Pins in Power Down Mode	-0.25	0.25	V

5.2. Operating Temperature

The operating temperature is listed in the following table:

Table 31: Operating Temperature

Parameter	Min.	Typ.	Max.	Unit
Normal Temperature	-35	+25	+80	℃

Quectel Confidential

Restricted Operation[1)]	-40 ~ -35	+80 ~ +85	℃
Storage Temperature	-45	+90	℃

NOTE

[1)] When the module works within this temperature range, the deviation from the GSM specification may occur. For example, the frequency error or the phase error will be increased.

5.3. Power Supply Ratings

Table 32: The Module Power Supply Ratings

Parameter	Description	Conditions	Min.	Typ.	Max.	Unit
VBAT	Supply voltage	Voltage must stay within the min/max values, including voltage drop, ripple, and spikes.	3.3	4.0	4.6	V
	Voltage drop during transmitting burst	Maximum power control level on GSM850 and GSM900.			400	mV
I_{VBAT}	Average supply current	Power down mode		150		uA
		SLEEP mode @DRX=5		1.3		mA
		Minimum functionality mode				
		AT+CFUN=0				
		IDLE mode		13		mA
		SLEEP mode		0.98		mA
		AT+CFUN=4				
		IDLE mode		13		mA
		SLEEP mode		1.0		mA
		TALK mode				
		GSM850/EGSM 900[1)]		195/204		mA
		DCS1800/PCS1900[2)]		129/145		mA
		DATA mode, GPRS (3Rx, 2Tx)				
		GSM850/EGSM 900[1)]		340/355		mA
		DCS1800/PCS1900[2)]		214/262		mA
		DATA mode, GPRS (2 Rx,3Tx)				
		GSM850/EGSM 900[1)]		485/512		mA
		DCS1800/PCS1900[2)]		298/369		mA
		DATA mode, GPRS (4 Rx,1Tx)				
		GSM850/EGSM 900[1)]		190/192		mA

Quectel Confidential

		DCS1800/PCS1900[2]	122/146		mA
		DATA mode, GPRS (1Rx,4Tx) GSM850/EGSM 900[1] DCS1800/PCS1900[2]	 465/474[3] 372/465		 mA mA
	Peak supply current (during transmission slot)	Maximum power control level on GSM850 and GSM900.	1.6	2	A

NOTE

1) [1] Power control level PCL 5.
2) [2] Power control level PCL 0.
3) [3] Under the GSM850 and EGSM900 spectrum, the power of 1Rx and 4Tx has been reduced.

5.4. Current Consumption

The values of current consumption are shown as below.

Table 33: The Module Current Consumption

Condition	Current Consumption
Voice Call	
GSM850	@power level #5 <250mA, Typical 195mA @power level #12, Typical 81mA @power level #19, Typical 62mA
GSM900	@power level #5 <250mA, Typical 204mA @power level #12, Typical 83mA @power level #19, Typical 62mA
DCS1800	@power level #0 <200mA, Typical 129mA @power level #7, Typical 71mA @power level #15, Typical 59mA
PCS1900	@power level #0 <200mA, Typical 145mA @power level #7, Typical 74mA @power level #15, Typical 60mA
GPRS Data	

Quectel Confidential

DATA Mode, GPRS (3Rx, 2Tx) CLASS12	
GSM850	@power level #5 <500mA, Typical 340mA
EGSM900	@power level #5 <500mA, Typical 355mA
DCS1800	@power level #0 <400mA, Typical 214mA
PCS1900	@power level #0 <400mA, Typical 262mA
DATA Mode, GPRS (2Rx, 3Tx) CLASS12	
GSM850	@power level #5 <600mA, Typical 485mA
EGSM900	@power level #5 <600mA, Typical 512mA
DCS1800	@power level #0 <490mA, Typical 298mA
PCS1900	@power level #0 <490mA, Typical 369mA
DATA Mode, GPRS (4Rx,1Tx) CLASS12	
GSM850	@power level #5 <350mA, Typical 190mA
EGSM900	@power level #5 <350mA, Typical 192mA
DCS1800	@power level #0 <300mA, Typical 122mA
PCS1900	@power level #0 <300mA, Typical 146mA
DATA Mode, GPRS (1Rx, 4Tx) CLASS12	
GSM850	@power level #5 <660mA, Typical 465mA
EGSM900	@power level #5 <660mA, Typical 474mA
DCS1800	@power level #0 <530mA, Typical 372mA
PCS1900	@power level #0 <530mA, Typical 465mA

NOTE

GPRS Class 12 is the default setting. The module can be configured from GPRS Class 1 to Class 12. Setting to lower GPRS class would make it easier to design the power supply for the module.

Quectel Confidential

5.5. Electro-static Discharge

Although the GSM engine is generally protected against Electro-static Discharge (ESD), ESD protection precautions should still be emphasized. Proper ESD handling and packaging procedures must be applied throughout the processing, handling and operation of any applications using the module.

The measured ESD values of module are shown as the following table:

Table 34: The ESD Endurance (Temperature: 25ºC, Humidity: 45%)

Tested Point	Contact Discharge	Air Discharge
VBAT, GND	±5KV	±10KV
RF_ANT	±5KV	±10KV
TXD, RXD	±2KV	±4KV
Others	±0.5KV	±1KV

Quectel Confidential

6 Mechanical Dimensions

This chapter describes the mechanical dimensions of the module.

6.1. Mechanical Dimensions of Module

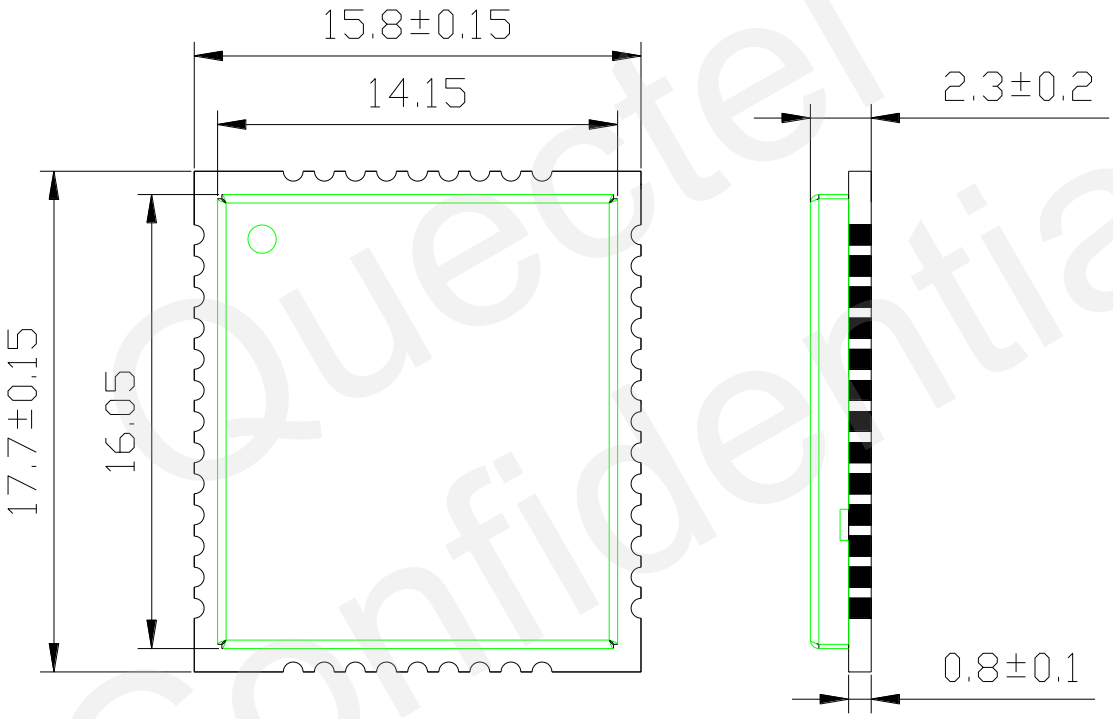

Figure 43: M66 Module Top and Side Dimensions (Unit: mm)

Quectel Confidential

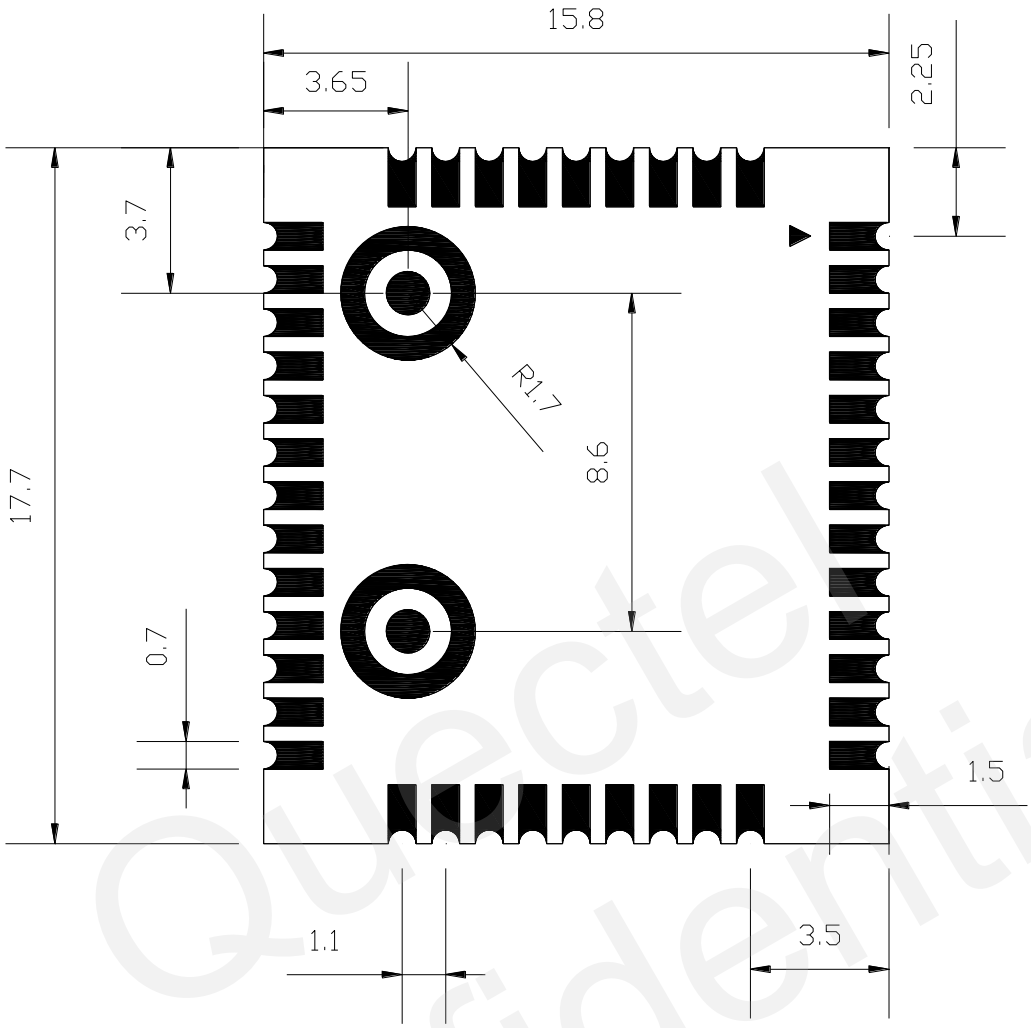

Figure 44: M66 Module Bottom Dimensions (Unit: mm)

Quectel Confidential

6.2. Recommended Footprint

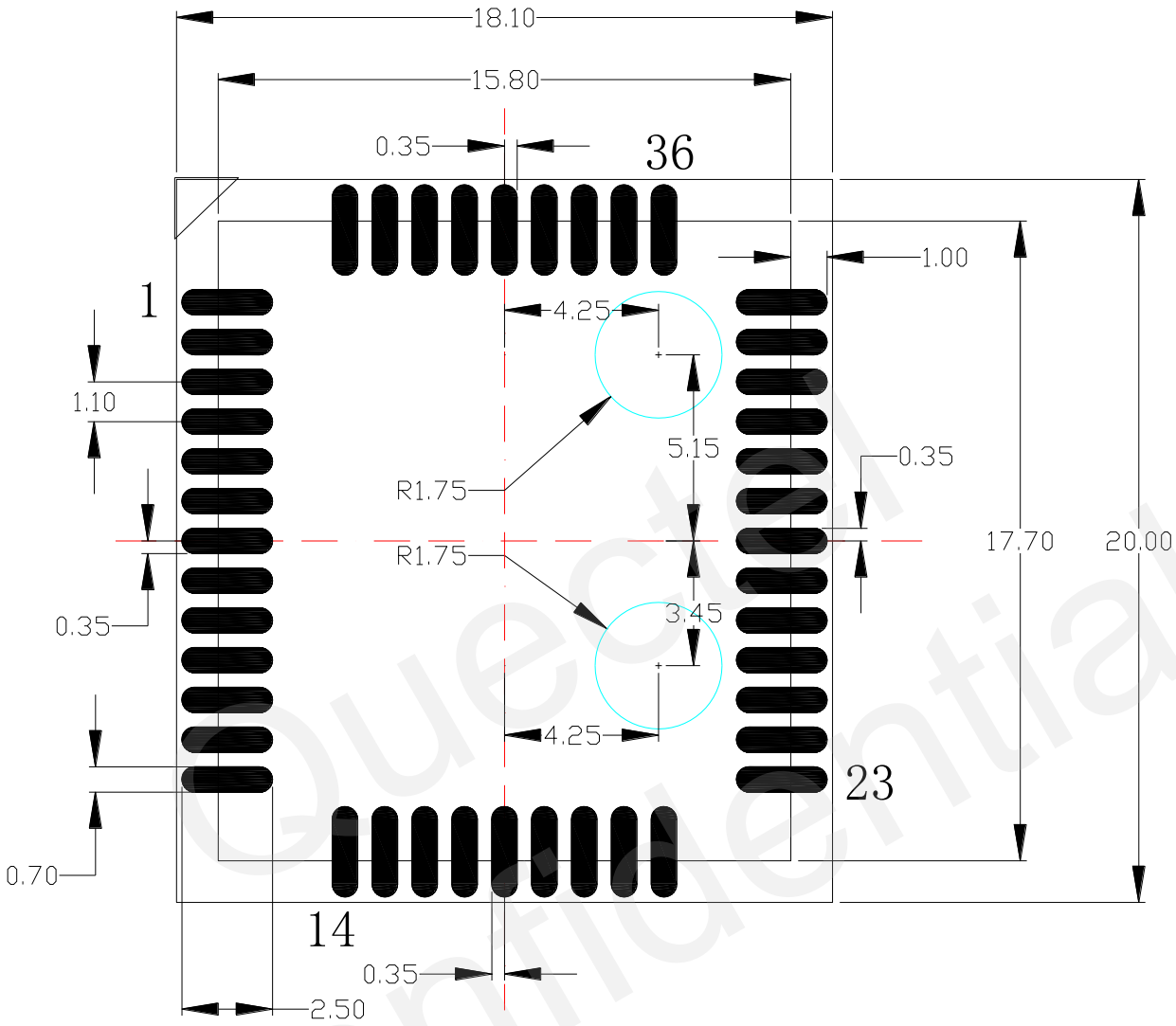

Figure 45: Recommended Footprint (Unit: mm)

NOTE

The module should keep about 3mm away from other components in the host PCB.

Quectel Confidential

6.3. Top View of the Module

Figure 46: Top View of the Module

6.4. Bottom View of the Module

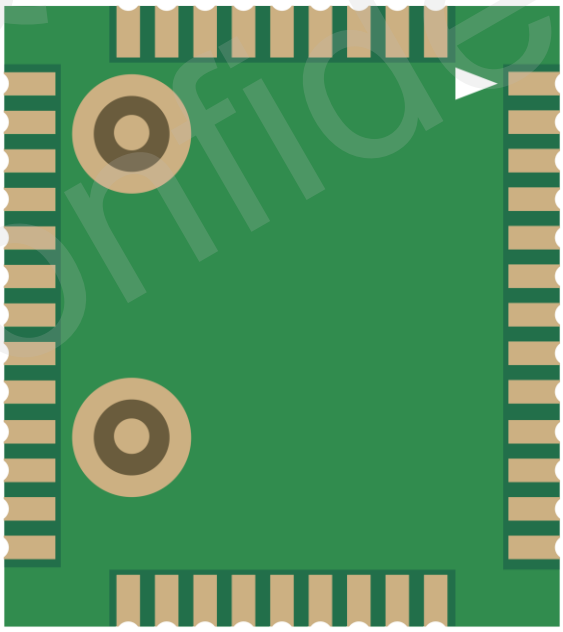

Figure 47: Bottom View of the Module

Quectel Confidential

7 Storage and Manufacturing

7.1. Storage

M66 module is distributed in a vacuum-sealed bag. The restriction for storage is shown as below.

Shelf life in the vacuum-sealed bag: 12 months at environments of <40ºC temperature and <90%RH.

After the vacuum-sealed bag is opened, devices that need to be mounted directly must be:

- Mounted within 72 hours at the factory environment of ≤30ºC temperature and <60% RH.
- Stored at <10% RH.

Devices require baking before mounting, if any circumstance below occurs.

- When the ambient temperature is 23ºC±5ºC, humidity indication card shows the humidity is >10% before opening the vacuum-sealed bag.
- If ambient temperature is <30ºC and the humidity is <60%, the devices have not been mounted during 72hours.
- Stored at >10% RH.

If baking is required, devices should be baked for 48 hours at 125ºC±5ºC.

NOTE

As plastic container cannot be subjected to high temperature, devices must be removed prior to high temperature (125ºC) bake. If shorter bake times are desired, refer to the IPC/JEDECJ-STD-033 for bake procedure.

Quectel Confidential

7.2. Soldering

The squeegee should push the paste on the surface of the stencil that makes the paste fill the stencil openings and penetrate to the PCB. The force on the squeegee should be adjusted so as to produce a clean stencil surface on a single pass. To ensure the module soldering quality, the thickness of stencil at the hole of the module pads should be 0.2 mm for M66.For more details, please refer to ***document [13]***

It is suggested that peak reflow temperature is from 235ºC to 245ºC (for SnAg3.0Cu0.5 alloy). Absolute max reflow temperature is 260ºC. To avoid damage to the module when it was repeatedly heated, it is suggested that the module should be mounted after the first panel has been reflowed. The following picture is the actual diagram which we have operated.

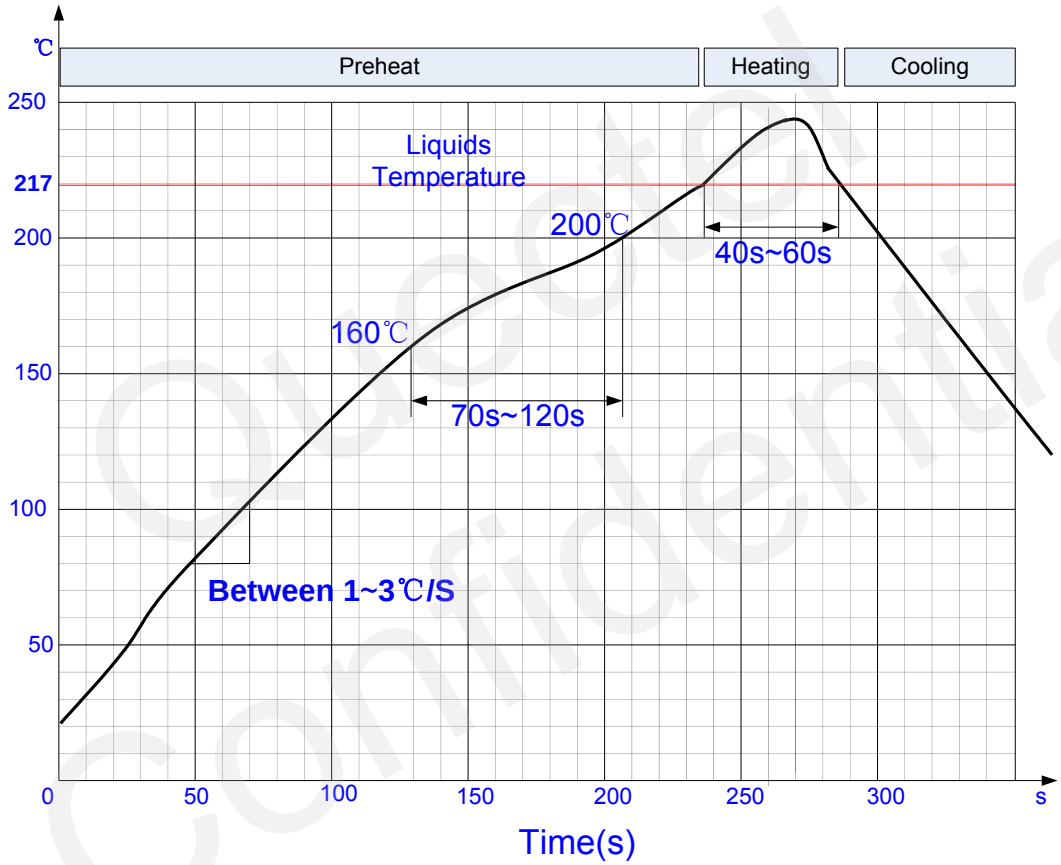

Figure 48: Ramp-Soak-Spike Reflow Profile

7.3. Packaging

The modules are stored in a vacuum-sealed bag which is ESD protected. It should not be opened until the devices are ready to be soldered onto the application.

7.3.1. Tape and Reel Packaging

The reel is 330mm in diameter and each reel contains 250 modules.

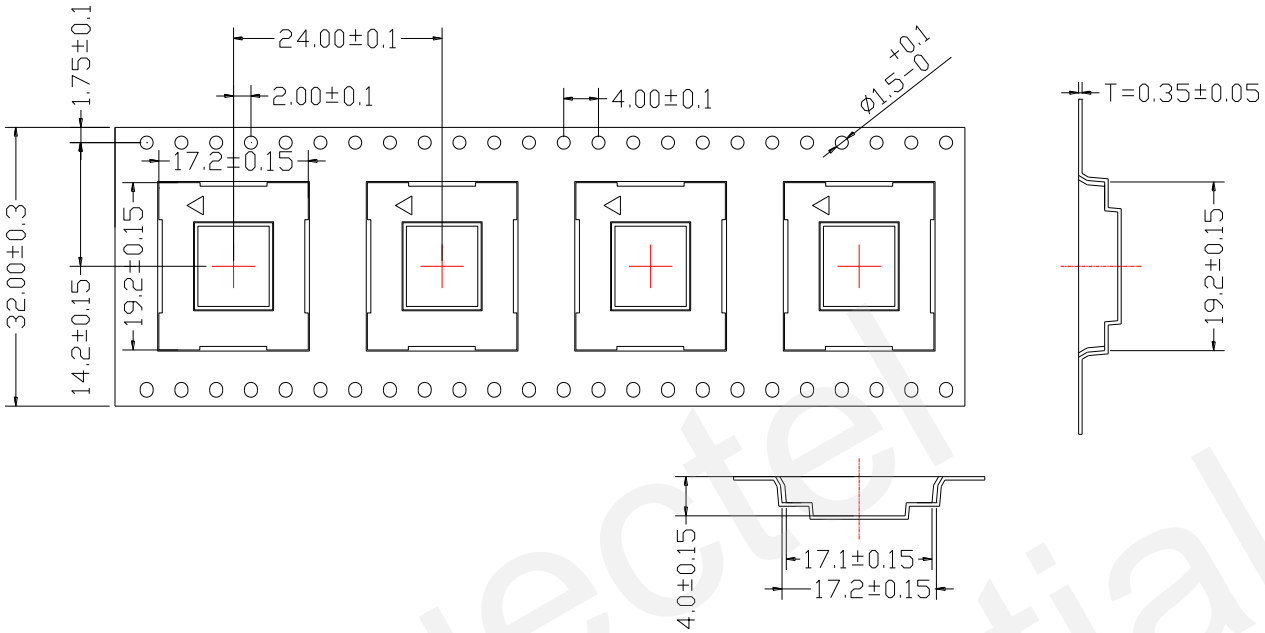

Figure 49: Tape and Reel Specification

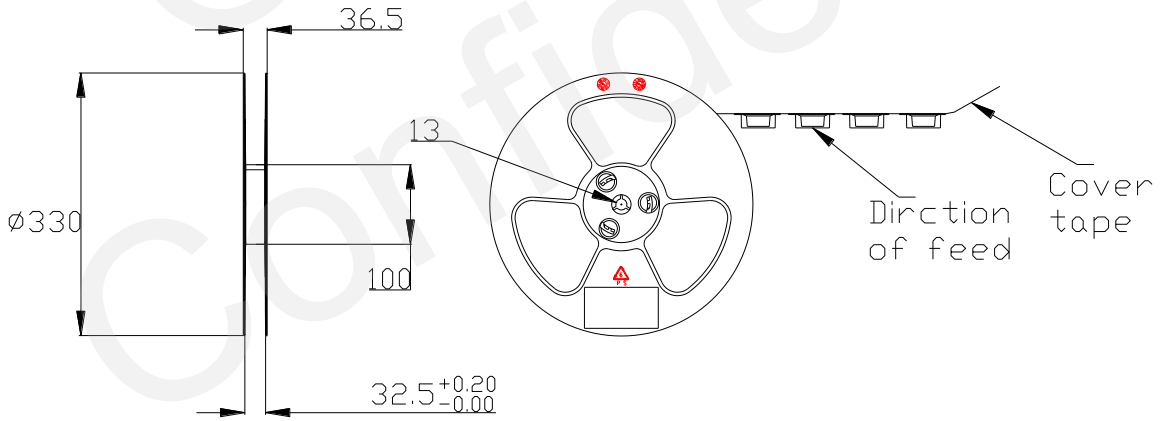

Figure 50: Dimensions of Reel

Quectel Confidential

8 Appendix A Reference

Table 35: Related Documents

SN	Document Name	Remark
[1]	Quectel_M66_AT_Commands_Manual	AT commands manual
[2]	ITU-T Draft new recommendation V.25ter	Serial asynchronous automatic dialing and control
[3]	GSM 07.07	Digital cellular telecommunications (Phase 2+); AT command set for GSM Mobile Equipment (ME)
[4]	GSM 07.10	Support GSM 07.10 multiplexing protocol
[5]	GSM 07.05	Digital cellular telecommunications (Phase 2+); Use of Data Terminal Equipment – Data Circuit terminating Equipment (DTE – DCE) interface for Short Message Service (SMS) and Cell Broadcast Service (CBS)
[6]	GSM 11.14	Digital cellular telecommunications (Phase 2+); Specification of the SIM Application Toolkit for the Subscriber Identity module – Mobile Equipment (SIM – ME) interface
[7]	GSM 11.11	Digital cellular telecommunications (Phase 2+); Specification of the Subscriber Identity module – Mobile Equipment (SIM – ME) interface
[8]	GSM 03.38	Digital cellular telecommunications (Phase 2+); Alphabets and language-specific information
[9]	GSM 11.10	Digital cellular telecommunications (Phase 2); Mobile Station (MS) conformance specification; Part 1: Conformance specification
[10]	GSM_UART_Application_Note	UART port application note
[11]	GSM_FW_Upgrade_AN01	GSM Firmware upgrade application note
[12]	GSM_EVB_User_Guide	GSM EVB user guide
[13]	Module_Secondary_SMT_User_Guide	Module secondary SMT user guide

Quectel Confidential

Table 36: Terms and Abbreviations

Abbreviation	Description
ADC	Analog-to-Digital Converter
AMR	Adaptive Multi-Rate
ARP	Antenna Reference Point
ASIC	Application Specific Integrated Circuit
BER	Bit Error Rate
BOM	Bill of Material
BT	Bluetooth
BTS	Base Transceiver Station
CHAP	Challenge Handshake Authentication Protocol
CS	Coding Scheme
CSD	Circuit Switched Data
CTS	Clear to Send
DAC	Digital-to-Analog Converter
DRX	Discontinuous Reception
DSP	Digital Signal Processor
DCE	Data Communications Equipment (typically module)
DTE	Data Terminal Equipment (typically computer, external controller)
DTR	Data Terminal Ready
DTX	Discontinuous Transmission
EFR	Enhanced Full Rate
EGSM	Enhanced GSM
EMC	Electromagnetic Compatibility
ESD	Electrostatic Discharge

Quectel Confidential

ETS	European Telecommunication Standard
FCC	Federal Communications Commission (U.S.)
FDMA	Frequency Division Multiple Access
FR	Full Rate
GMSK	Gaussian Minimum Shift Keying
GPRS	General Packet Radio Service
GSM	Global System for Mobile Communications
G.W	Gross Weight
HR	Half Rate
I/O	Input/Output
IC	Integrated Circuit
IMEI	International Mobile Equipment Identity
$I_O$max	Maximum Output Load Current
kbps	Kilo Bits Per Second
LED	Light Emitting Diode
Li-Ion	Lithium-Ion
MO	Mobile Originated
MOQ	Minimum Order Quantity
MP	Manufacture Product
MS	Mobile Station (GSM engine)
MT	Mobile Terminated
N.W	Net Weight
PAP	Password Authentication Protocol
PBCCH	Packet Switched Broadcast Control Channel
PCB	Printed Circuit Board

Quectel Confidential

PDU	Protocol Data Unit
PPP	Point-to-Point Protocol
RF	Radio Frequency
RMS	Root Mean Square (value)
RTC	Real Time Clock
RX	Receive Direction
SIM	Subscriber Identification Module
SMS	Short Message Service
TDMA	Time Division Multiple Access
TE	Terminal Equipment
TX	Transmitting Direction
UART	Universal Asynchronous Receiver & Transmitter
URC	Unsolicited Result Code
USSD	Unstructured Supplementary Service Data
VSWR	Voltage Standing Wave Ratio
$V_O$max	Maximum Output Voltage Value
$V_O$norm	Normal Output Voltage Value
$V_O$min	Minimum Output Voltage Value
V_{IH}max	Maximum Input High Level Voltage Value
V_{IH}min	Minimum Input High Level Voltage Value
V_{IL}max	Maximum Input Low Level Voltage Value
V_{IL}min	Minimum Input Low Level Voltage Value
$V_I$max	Absolute Maximum Input Voltage Value
$V_I$norm	Absolute Normal Input Voltage Value
$V_I$min	Absolute Minimum Input Voltage Value

Quectel Confidential

V_{OH}max	Maximum Output High Level Voltage Value
V_{OH}min	Minimum Output High Level Voltage Value
V_{OL}max	Maximum Output Low Level Voltage Value
V_{OL}min	Minimum Output Low Level Voltage Value
Phonebook Abbreviations	
LD	SIM Last Dialing phonebook (list of numbers most recently dialed)
MC	Mobile Equipment list of unanswered MT Calls (missed calls)
ON	SIM (or ME) Own Numbers (MSISDNs) list
RC	Mobile Equipment list of Received Calls
SM	SIM phonebook

Quectel Confidential

9 Appendix B GPRS Coding Scheme

Four coding schemes are used in GPRS protocol. The differences between them are shown in the following table.

Table 37: Description of Different Coding Schemes

Scheme	Code Rate	USF	Pre-coded USF	Radio Block excl.USF and BCS	BCS	Tail	Coded Bits	Punctured Bits	Data Rate Kb/s
CS-1	1/2	3	3	181	40	4	456	0	9.05
CS-2	2/3	3	6	268	16	4	588	132	13.4
CS-3	3/4	3	6	312	16	4	676	220	15.6
CS-4	1	3	12	428	16	-	456	-	21.4

Radio block structure of CS-1, CS-2 and CS-3 is shown as the figure below.

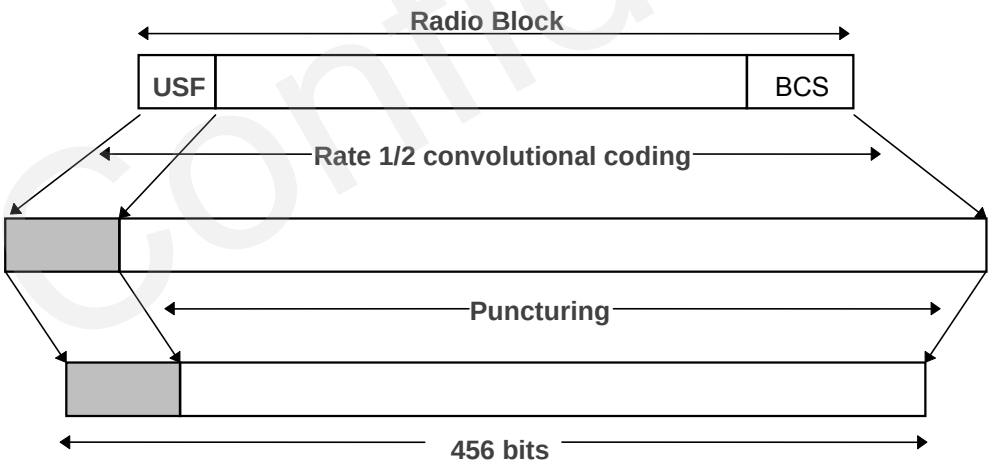

Figure 51: Radio Block Structure of CS-1, CS-2 and CS-3

Quectel Confidential

Radio block structure of CS-4 is shown as the following figure.

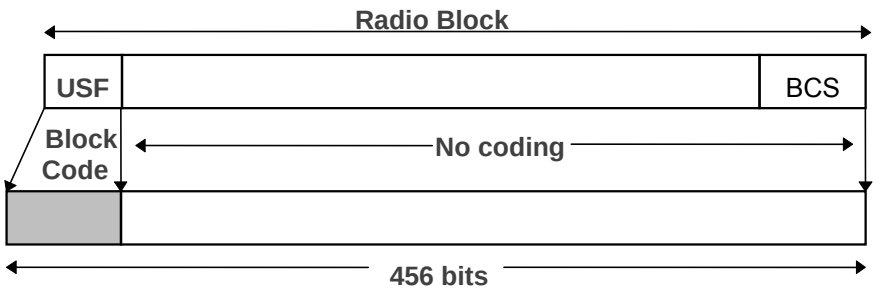

Figure 52: Radio Block Structure of CS-4

Quectel Confidential

10 Appendix C GPRS Multi-slot Class

Twenty-nine classes of GPRS multi-slot modes are defined for MS in GPRS specification. Multi-slot classes are product dependant, and determine the maximum achievable data rates in both the uplink and downlink directions. Written as 3+1 or 2+2, the first number indicates the amount of downlink timeslots, while the second number indicates the amount of uplink timeslots. The active slots determine the total number of slots the GPRS device can use simultaneously for both uplink and downlink communications. The description of different multi-slot classes is shown in the following table.

Table 38: GPRS Multi-slot Classes

Multislot Class	Downlink Slots	Uplink Slots	Active Slots
1	1	1	2
2	2	1	3
3	2	2	3
4	3	1	4
5	2	2	4
6	3	2	4
7	3	3	4
8	4	1	5
9	3	2	5
10	4	2	5
11	4	3	5
12	4	4	5

Quectel Confidential

M66

AT Commands Manual

GSM/GPRS Module Series

Rev. M66_AT_Commands_Manual_V1.0

Date: 2014-08-15

www.quectel.com

Our aim is to provide customers with timely and comprehensive service. For any assistance, please contact our company headquarters:

Quectel Wireless Solutions Co., Ltd.
Office 501, Building 13, No.99, Tianzhou Road, Shanghai, China, 200233
Tel: +86 21 5108 6236
Mail: info@quectel.com

Or our local office, for more information, please visit:
http://www.quectel.com/support/salesupport.aspx

For technical support, to report documentation errors, please visit:
http://www.quectel.com/support/techsupport.aspx

GENERAL NOTES

QUECTEL OFFERS THIS INFORMATION AS A SERVICE TO ITS CUSTOMERS. THE INFORMATION PROVIDED IS BASED UPON CUSTOMERS' REQUIREMENTS. QUECTEL MAKES EVERY EFFORT TO ENSURE THE QUALITY OF THE INFORMATION IT MAKES AVAILABLE. QUECTEL DOES NOT MAKE ANY WARRANTY AS TO THE INFORMATION CONTAINED HEREIN, AND DOES NOT ACCEPT ANY LIABILITY FOR ANY INJURY, LOSS OR DAMAGE OF ANY KIND INCURRED BY USE OF OR RELIANCE UPON THE INFORMATION. ALL INFORMATION SUPPLIED HEREIN IS SUBJECT TO CHANGE WITHOUT PRIOR NOTICE.

COPYRIGHT

THIS INFORMATION CONTAINED HERE IS PROPRIETARY TECHNICAL INFORMATION OF QUECTEL CO., LTD. TRANSMITTABLE, REPRODUCTION, DISSEMINATION AND EDITING OF THIS DOCUMENT AS WELL AS UTILIZATION OF THIS CONTENTS ARE FORBIDDEN WITHOUT PERMISSION. OFFENDERS WILL BE HELD LIABLE FOR PAYMENT OF DAMAGES. ALL RIGHTS ARE RESERVED IN THE EVENT OF A PATENT GRANT OR REGISTRATION OF A UTILITY MODEL OR DESIGN.

Copyright © Quectel Wireless Solutions Co., Ltd. 2014. All rights reserved.

About the Document

History

Revision	Date	Author	Description
1.0	2014-08-15	Jelly WANG	Initial

Quectel Confidential

Contents

About the Document **2**
Contents **3**
Table Index **9**

1 Introduction **10**
1.1. Scope of the Document 10
1.2. AT Command Syntax 10
1.2.1. Combining AT Commands on the Same Command Line 11
1.2.2. Entering Successive AT Commands on Separate Lines 11
1.3. Supported Character Sets 11
1.4. Flow Control 12
1.4.1. Software Flow Control (XON/XOFF Flow Control) 12
1.4.2. Hardware Flow Control (RTS/CTS Flow Control) 13
1.5. Unsolicited Result Code 13

2 General Commands **14**
2.1. ATI Display Product Identification Information 14
2.2. AT+GMI Request Manufacturer Identification 14
2.3. AT+GMM Request TA Model Identification 15
2.4. AT+GMR Request TA Revision Identification of Software Release 15
2.5. AT+GOI Request Global Object Identification 16
2.6. AT+CGMI Request Manufacturer Identification 17
2.7. AT+CGMM Request Model Identification 17
2.8. AT+CGMR Request TA Revision Identification of Software Release 17
2.9. AT+GSN Request International Mobile Equipment Identity (IMEI) 18
2.10. AT+CGSN Request Product Serial Number Identification (Identical with +GSN) 19
2.11. AT+QGSN Request Product Serial Number Identification (IMEI) 19
2.12. AT&F Set all Current Parameters to Manufacturer Defaults 20
2.13. AT&V Display Current Configuration 20
2.14. AT&W Store Current Parameter to User Defined Profile 22
2.15. ATQ Set Result Code Presentation Mode 23
2.16. ATV TA Response Format 23
2.17. ATX Set CONNECT Result Code Format and Monitor Call Progress 25
2.18. ATZ Set all Current Parameters to User Defined Profile 26
2.19. AT+CFUN Set Phone Functionality 26
2.20. AT+QPOWD Power off 28
2.21. AT+CMEE Report Mobile Equipment Error 28
2.22. AT+CSCS Select TE Character Set 29
2.23. AT+GCAP Request Complete TA Capabilities List 31

3 Serial Interface Control Commands **32**
3.1. AT&C Set DCD Function Mode 32
3.2. AT&D Set DTR Function Mode 32

Quectel Confidential

3.3. AT+ICF Set TE-TA Control Character Framing 33
3.4. AT+IFC Set TE-TA Local Data Flow Control 34
3.5. AT+ILRR Set TE-TA Local Data Rate Reporting Mode 35
3.6. AT+IPR Set TE-TA Fixed Local Rate 36
3.6.1. Adaptive Baud 38
3.7. AT+CMUX Multiplexer Control 39

4 Status Control Commands 41
4.1. AT+CEER Extended Error Report 41
4.2. AT+CPAS Mobile Equipment Activity Status 42
4.3. AT+QINDRI Indicate RI When Using URC 43
4.4. AT+QMOSTAT Show State of Mobile Originated Call 44
4.5. AT+QIURC Enable or Disable Initial URC Presentation 45
4.6. AT+QEXTUNSOL Enable/Disable Proprietary Unsolicited Indications 45
4.7. AT+QINISTAT Query State of Initialization 47
4.8. AT+QNSTATUS Query GSM Network Status 48
4.9. AT+QNITZ Network Time Synchronization 48
4.10. AT+QLTS Obtain Latest Network Time Synchronized 49
4.11. AT+QCGTIND Circuit Switched Call or GPRS PDP Context Termination Indication 50
4.12. AT+CTZU Network Time Synchronization and Update the RTC Time 51
4.13. AT+CTZR Network Time Synchronization Report 52

5 SIM Related Commands 53
5.1. AT+CIMI Request International Mobile Subscriber Identity (IMSI) 53
5.2. AT+CLCK Facility Lock 54
5.3. AT+CPIN Enter PIN 56
5.4. AT+CPWD Change Password 57
5.5. AT+CRSM Restricted SIM Access 59
5.6. AT+QCSPWD Change PS Super Password 60
5.7. AT+QCCID Show CCID 60
5.8. AT+QGID Get SIM Card Group Identifier 61
5.9. AT+QSIMVOL Select SIM Card Operating Voltage 62
5.10. AT+QSPN Get Service Provider Name from SIM 62
5.11. AT+QTRPIN Times Remain to Input SIM PIN/PUK 63

6 Network Service Commands 64
6.1. AT+COPS Operator Selection 64
6.2. AT+CREG Network Registration 66
6.3. AT+CSQ Signal Quality Report 67
6.4. AT+CPOL Preferred Operator List 68
6.5. AT+COPN Read Operator Names 69
6.6. AT+QBAND Get and Set Mobile Operation Band 70
6.7. AT+QENG Switch on or off Engineering Mode 71
6.8. AT+QSCANF Scan Power of GSM Frequency 74
6.9. AT+QLOCKF Lock GSM Frequency 75

Quectel Confidential

7 Call Related Commands 76
7.1. ATA Answer an Incoming Call 76
7.2. ATD Mobile Originated Call to Dial a Number 77
7.3. ATH Disconnect Existing Connection 78
7.4. +++ Switch from Data Mode to Command Mode 79
7.5. ATO Switch from Command Mode to Data Mode 80
7.6. ATP Select Pulse Dialing 80
7.7. ATS0 Set Number of Rings before Automatically Answering Call 81
7.8. ATS6 Set Pause before Blind Dialing 81
7.9. ATS7 Set Number of Seconds to Wait for Connection Completion 82
7.10. ATS8 Set the Number of Seconds to Wait for Comma Dial Modifier 83
7.11. ATS10 Set Disconnect Delay after Indicating the Absence of Data Carrier 83
7.12. ATT Select Tone Dialing 84
7.13. AT+CSTA Select Type of Address 84
7.14. AT+CLCC List Current Calls of ME 85
7.15. AT+CR Service Reporting Control 86
7.16. AT+CRC Set Cellular Result Codes for Incoming Call Indication 87
7.17. AT+CRLP Select Radio Link Protocol Parameter 89
7.18. AT+CSNS Single Numbering Scheme 90
7.19. AT+CMOD Configure Alternating Mode Calls 90
7.20. AT+QSFR Preference Speech Coding 91
7.21. AT+QSPCH Speech Channel Type Report 92
7.22. AT+QDISH Disable ATH 93

8 SMS Commands 94
8.1. AT+CSMS Select Message Service 94
8.2. AT+CMGF Select SMS Message Format 95
8.3. AT+CSCA SMS Service Center Address 95
8.4. AT+CPMS Preferred SMS Message Storage 97
8.5. AT+CMGD Delete SMS Message 98
8.6. AT+CMGL List SMS Messages from Preferred Store 99
8.7. AT+CMGR Read SMS Message 102
8.8. AT+CMGS Send SMS Message 105
8.9. AT+CMGW Write SMS Message to Memory 107
8.10. AT+CMSS Send SMS Message from Storage 108
8.11. AT+CMGC Send SMS Command 109
8.12. AT+CNMI New SMS Message Indications 110
8.13. AT+CRES Restore SMS Settings 113
8.14. AT+CSAS Save SMS Settings 114
8.15. AT+CSCB Select Cell Broadcast SMS Messages 114
8.16. AT+CSDH Show SMS Text Mode Parameters 115
8.17. AT+CSMP Set SMS Text Mode Parameters 116
8.18. AT+QCLASS0 Store Class 0 SMS to SIM when Receiving Class 0 SMS 117
8.19. AT+QMGDA Delete all SMS 119
8.20. AT+QSMSCODE Configure SMS Code Mode 119

Quectel Confidential

9 Phonebook Commands 121
9.1. AT+CPBS Select Phonebook Memory Storage 121
9.2. AT+CPBW Write Phonebook Entry 122
9.3. AT+CPBR Read Current Phonebook Entries 123
9.4. AT+CPBF Find Phonebook Entries 124
9.5. AT+CNUM Subscriber Number 125

10 GPRS Commands 127
10.1. AT+CGATT Attach to/Detach from GPRS Service 127
10.2. AT+CGDCONT Define PDP Context 128
10.3. AT+CGQREQ Quality of Service Profile (Requested) 129
10.4. AT+CGQMIN Quality of Service Profile (Minimum Acceptable) 130
10.5. AT+CGACT PDP Context Activate or Deactivate 131
10.6. AT+CGDATA Enter Data State 132
10.7. AT+CGPADDR Show PDP Address 133
10.8. AT+CGCLASS GPRS Mobile Station Class 134
10.9. AT+CGEREP Control Unsolicited GPRS Event Reporting 135
10.10. AT+CGREG Network Registration Status 136
10.11. AT+CGSMS Select Service for MO SMS Messages 137
10.12. AT+QGPCLASS Change GPRS Multi-slot Class 138

11 TCPIP Commands 139
11.1. AT+QIOPEN Start up TCP or UDP Connection 139
11.2. AT+QISEND Send Data through TCP or UDP Connection 140
11.3. AT+QICLOSE Close TCP or UDP Connection 141
11.4. AT+QIDEACT Deactivate GPRS/CSD PDP Context 142
11.5. AT+QILPORT Set Local Port 143
11.6. AT+QIREGAPP Start TCPIP Task and Set APN, User Name and Password 144
11.7. AT+QIACT Activate GPRS/CSD Context 145
11.8. AT+QILOCIP Get Local IP Address 145
11.9. AT+QISTAT Query Current Connection Status 146
11.10. AT+QISTATE Query Connection Status of the Current Access 147
11.11. AT+QISSTAT Query the Current Server Status 149
11.12. AT+QIDNSCFG Configure Domain Name Server 150
11.13. AT+QIDNSGIP Query the IP Address of Given Domain Name 150
11.14. AT+QIDNSIP Connect with IP Address or Domain Name Server 151
11.15. AT+QIHEAD Add an IP Header when Receiving Data 152
11.16. AT+QIAUTOS Set Auto Sending Timer 153
11.17. AT+QIPROMPT Set Prompt of '>' when Sending Data 153
11.18. AT+QISERVER Configured as Server 154
11.19. AT+QICSGP Select CSD or GPRS as the Bearer 155
11.20. AT+QISRVC Choose Connection 156
11.21. AT+QISHOWRA Set Whether or Not to Display the Address of Sender 157
11.22. AT+QISCON Save TCPIP Application Context 158
11.23. AT+QIMODE Select TCPIP Transfer Mode 159

Quectel Confidential

11.24. AT+QITCFG Configure Transparent Transfer Mode 160
11.25. AT+QISHOWPT Control Whether or Not to Show the Protocol Type 161
11.26. AT+QIMUX Control Whether or Not to Enable Multiple TCPIP Session 162
11.27. AT+QISHOWLA Control Whether or Not to Display Local IP Address 163
11.28. AT+QIFGCNT Select a Context as Foreground Context 163
11.29. AT+QISACK Query the Data Information for Sending 164
11.30. AT+QINDI Set the Method to Handle Received TCP/IP Data 165
11.31. AT+QIRD Retrieve the Received TCP/IP Data 166
11.32. AT+QISDE Control Whether or Not to Echo the Data for QISEND 167
11.33. AT+QPING Ping a Remote Server 168
11.34. AT+QNTP Synchronize the Local Time Via NTP 169

12 Supplementary Service Commands 171
12.1. AT+CCFC Call Forwarding Number and Conditions Control 171
12.2. AT+CCUG Closed User Group Control 173
12.3. AT+CCWA Call Waiting Control 174
12.4. AT+CHLD Call Hold and Multiparty 175
12.5. AT+CLIP Calling Line Identification Presentation 177
12.6. AT+QCLIP Control Whether or Not to Show the Name of Incoming Call Number 179
12.7. AT+CLIR Calling Line Identification Restriction 180
12.8. AT+COLP Connected Line Identification Presentation 181
12.9. AT+QCOLP Show Alpha Field in +COLP String 182
12.10. AT+CUSD Unstructured Supplementary Service Data 183
12.11. AT+CSSN Supplementary Services Notification 184

13 Audio Commands 186
13.1. ATL Set Monitor Speaker Loudness 186
13.2. ATM Set Monitor Speaker Mode 186
13.3. AT+VTD Tone Duration 187
13.4. AT+VTS DTMF and Tone Generation 188
13.5. AT+CALM Alert Sound Mode 189
13.6. AT+CRSL Ringer Sound Level 189
13.7. AT+CLVL Loud Speaker Volume Level 190
13.8. AT+CMUT Mute Control 191
13.9. AT+QSIDET Change the Side Tone Gain Level 191
13.10. AT+QMIC Change the Microphone Gain Level 192
13.11. AT+QLDTMF Generate Local DTMF Tones 193
13.12. AT+QAUDCH Swap the Audio Channels 194
13.13. AT+QAUDLOOP Audio Channel Loop Back Test 194
13.14. AT+QLTONE Generate Local Specific Tone 195
13.15. AT+QTONEP Set DTMF Output Path 196
13.16. AT+QTDMOD Set Tone Detection Mode 197
13.17. AT+QTONEDET Detect DTMF 198
13.18. AT+QWDTMF Play DTMF Tone During the Call 200

14 Hardware Related Commands 202

Quectel Confidential

14.1. AT+CCLK Clock 202
14.2. AT+QALARM Set Alarm 203
14.3. AT+CBC Battery Charge 204
14.4. AT+QSCLK Configure Slow Clock 204
14.5. AT+QLEDMODE Configure the Network LED Patterns 205

15 Others Commands 206
15.1. A/ Re-issues the Last Command Given 206
15.2. ATE Set Command Echo Mode 206
15.3. ATS3 Set Command Line Termination Character 207
15.4. ATS4 Set Response Formatting Character 207
15.5. ATS5 Set Command Line Editing Character 208
15.6. AT+DS V.42bis Data Compression Control 208
15.7. AT+DR V.42bis Data Compression Reporting Control 209
15.8. AT+QRIMODE Set RI Time 210

16 Appendix 212
16.1. Related Documents 212
16.2. Terms and Abbreviations 212
16.3. Factory Default Settings Restorable with AT&F 213
16.4. AT Command Settings Storable with AT&W 215
16.5. AT Command Settings Storable with ATZ 218
16.6. Summary of URC 220
16.7. Summary of CME ERROR Codes 222
16.8. Summary of CMS ERROR Codes 226
16.9. Summary of Cause for Extended Error Report 228
16.9.1. Location ID for the Extended Error Report 228
16.9.2. Cause for Protocol Stack (PS) Layer 228
16.9.3. Internal Cause for MM Layer 241
16.9.4. Cause for PPP/IP-Stack 242

Quectel Confidential

Table Index

TABLE 1: TYPES OF AT COMMANDS AND RESPONSES 11
TABLE 2: AT&V DISPLAY CURRENT CONFIGURATION LIST 21
TABLE 3: ATV0&ATV1 RESULT CODES NUMERIC EQUIVALENTS AND BRIEF DESCRIPTIONS 24
TABLE 4: RELATED DOCUMENTS 212
TABLE 5: TERMS AND ABBREVIATIONS 212
TABLE 6: FACTORY DEFAULT SETTINGS RESTORABLE WITH AT&F 213
TABLE 7: AT COMMAND SETTINGS STORABLE WITH AT&W 215
TABLE 8: AT COMMAND SETTINGS STORABLE WITH ATZ 218
TABLE 9: SUMMARY OF URC 220
TABLE 10: DIFFERENT CODING SCHEMES OF +CME ERROR: <ERR> 222
TABLE 11: DIFFERENT CODING SCHEMES OF +CMS ERROR: <ERR> 226
TABLE 12: LOCATION ID FOR THE EXTENDED ERROR REPORT 228
TABLE 13: CAUSE FOR PROTOCOL STACK (PS) LAYER 228
TABLE 14: INTERNAL CAUSE FOR MM LAYER 241
TABLE 15: CAUSE FOR PPP/IP-STACK 242

Quectel Confidential

1 Introduction

1.1. Scope of the Document

This document presents the AT Commands Set for Quectel cellular engine M66.

1.2. AT Command Syntax

The "**AT**" or "**at**" prefix must be set at the beginning of each command line. To terminate a command line enter **<CR>**. Commands are usually followed by a response that includes "**<CR><LF><response><CR><LF>**". Throughout this document, only the responses are presented, "**<CR><LF>**" are omitted intentionally.

The AT Commands Set implemented by M66 is a combination of GSM07.05, GSM07.07 and ITU-T recommendation V.25ter and the AT Commands developed by Quectel.

All these AT Commands can be split into three categories syntactically: "**basic**", "**S parameter**", and "**extended**". They are listed as follows:

- **Basic syntax**

These AT Commands have the format of "**AT<*x*><*n*>**", or "**AT&<x><n>**", where "**<*x*>**" is the command, and "**<*n*>**" is/are the argument(s) for that command. An example of this is "**ATE<*n*>**", which tells the DCE whether received characters should be echoed back to the DTE according to the value of "**<*n*>**". "**<*n*>**" is optional and a default will be used if it is missing.

- **S parameter syntax**

These AT Commands have the format of "**ATS<*n*>=<*m*>**", where "**<*n*>**" is the index of the **S** register to set, and "**<m>**" is the value to assign to it. "**<*m*>**" is optional; if it is missing, then a default value is assigned.

- **Extended syntax**

These commands can be operated in several modes, as following table:

Quectel Confidential

Table 1: Types of AT Commands and Responses

Test Command	**AT+<*x*>=?**	This command returns the list of parameters and value ranges set by the corresponding Write Command or internal processes.
Read Command	**AT+<*x*>?**	This command returns the currently set value of the parameter or parameters.
Write Command	**AT+<x>=<…>**	This command sets the user-definable parameter values.
Execution Command	**AT+<x>**	This command reads non-variable parameters affected by internal processes in the GSM engine

1.2.1. Combining AT Commands on the Same Command Line

You can enter several AT Commands on the same line. In this case, you do not need to type the "**AT**" or "**at**" prefix before every command. Instead, you only need to type "**AT**" or "**at**" at the beginning of the command line. Please note that use a semicolon as command delimiter.

The command line buffer can accept a maximum of 256 characters. If the input characters exceeded the maximum then no command will be executed and TA will return "ERROR".

1.2.2. Entering Successive AT Commands on Separate Lines

When you need to enter a series of AT Commands on separate lines, please note that you need to wait the final response (for example OK, CME error, CMS error) of the last AT command you entered before you enter the next AT command.

1.3. Supported Character Sets

The M66 AT Command interface defaults to the **IRA** character set. The M66 supports the following character sets:

- GSM
- UCS2
- HEX
- IRA
- PCCP437
- 8859-1

The character set can be configured and interrogated using the "AT+CSCS" command (GSM 07.07). The character set is defined in GSM specification 07.05. The character set affects transmission and reception

Quectel Confidential

of SMS and SMS Cell Broadcast Messages, the entry and display of phone book entries text field and SIM Application Toolkit alpha strings.

1.4. Flow Control

Flow control is very important for correct communication between the GSM engine and DTE. For example, in the case such as a data or FAX call, the sending device is transferring data faster than the receiving side is ready to accept. When the receiving buffer reaches its capacity, the receiving device should be capable to cause the sending device to pause until it catches up.

There are basically two approaches to achieve data flow control: software flow control and hardware flow control. M66 supports both two kinds of flow control.

In Multiplex mode, it is recommended to use the hardware flow control.

The default flow control approach of M66 is closed.

1.4.1. Software Flow Control (XON/XOFF Flow Control)

Software flow control sends different characters to stop (XOFF, decimal 19) and resume (XON, decimal 17) data flow. It is quite useful in some applications that only use three wires on the serial interface.

The default flow control approach of M66 is closed, to enable software flow control in the DTE interface and within GSM engine, type the following AT command:

AT+IFC=1, 1<CR>

This setting is stored volatile, for use after restart, **AT+IFC=1, 1<CR>** should be stored to the user profile with **AT&W<CR>**.

Ensure that any communication software package (e.g. ProComm Plus, Hyper Terminal or WinFax Pro) uses software flow control.

NOTE

Software Flow Control should not be used for data calls where binary data will be transmitted or received (e.g. TCP/IP), because the DTE interface may interpret binary data as flow control characters.

Quectel Confidential

1.4.2. Hardware Flow Control (RTS/CTS Flow Control)

The default flow control approach of M66 is closed, to enable hardware flow control (RTS/CTS flow control) in the DTE interface and within GSM engine, type the following AT command:

AT+IFC=2, 2<CR>

This setting is stored volatile, for use after restart, **AT+IFC=2, 2<CR>** should be stored to the user profile with **AT&W<CR>**.

Hardware flow control achieves the data flow control by controlling the RTS/CTS line. When the data transfer should be suspended, the CTS line is set inactive until the transfer from the receiving buffer has completed. When the receiving buffer is ok to receive more data, CTS goes active once again.

To achieve hardware flow control, ensure that the RTS/CTS lines are present on your application platform.

1.5. Unsolicited Result Code

A URC is a report message sent from the ME to the TE. An unsolicited result code can either be delivered automatically when an event occurs, to reflect change in system state or as a result of a query the ME received before, often due to occurrences of errors in executing the queries. However, a URC is not issued as a direct response to an executed AT command. AT commands have their own implementations to validate inputs such as “**OK**” or “**ERROR**”.

Typical URCs may be information about incoming calls, received SMS, changing temperature, status of the battery etc. A summary of URCs is listed in ***Appendix***.

When sending a URC, the ME activates its Ring Interrupt (Logic “l”), i.e. the line goes active low for a few milliseconds. If an event which delivers a URC coincides with the execution of an AT command, the URC will be output after command execution has completed.

Quectel Confidential

2 General Commands

2.1. ATI Display Product Identification Information

ATI Display Product Identification Information	
Execution Command **ATI**	Response TA issues product information text. **Quectel_Ltd** **Quectel_M66** **Revision: M66FARxxAxx** **OK**
Maximum Response Time	300ms
Reference V.25ter	

Example

```
ATI
Quectel_Ltd
Quectel_M66
Revision: M66FAR01A01

OK
```

2.2. AT+GMI Request Manufacturer Identification

AT+GMI Request Manufacturer Identification	
Test Command **AT+GMI=?**	Response **OK**
Execution Command **AT+GMI**	Response TA reports one or more lines of information text which permit the user to identify the manufacturer.

Quectel Confidential

	Quectel_Ltd **Quectel_M66** **Revision: MTK 0828** **OK**
Maximum Response Time	300ms
Reference V.25ter	

2.3. AT+GMM Request TA Model Identification

AT+GMM Request TA Model Identification	
Test Command **AT+GMM=?**	Response **OK**
Execution Command **AT+GMM**	Response TA returns a product model identification text. **Quectel_M66** **OK**
Maximum Response Time	300ms
Reference V.25ter	

2.4. AT+GMR Request TA Revision Identification of Software Release

AT+GMR Request TA Revision Identification of Software Release	
Test Command **AT+GMR=?**	Response **OK**
Execution Command **AT+GMR**	Response TA reports one or more lines of information text which permit the user to identify the revision of software release. **Revision: <revision>** **OK**
Maximum Response Time	300ms
Reference V.25ter	

Quectel Confidential

Parameter

<revision>	Revision of software release

Example

```
AT+GMR
Revision: M66FAR01A01

OK
```

2.5. AT+GOI Request Global Object Identification

AT+GOI Request Global Object Identification	
Test Command **AT+GOI=?**	Response **OK**
Execution Command **AT+GOI**	Response TA reports one or more lines of information text which permit the user to identify the device, based on the ISO system for registering unique object identifiers. **<Object Id>** **OK**
Maximum Response Time	300ms
Reference V.25ter	

Parameter

<Object Id>	Identifier of device type

NOTE

See X.208, 209 for the format of **<Object Id>**. For example, in M66 wireless module, string “M66” is displayed.

Quectel Confidential

2.6. AT+CGMI Request Manufacturer Identification

AT+CGMI Request Manufacturer Identification	
Test Command **AT+CGMI=?**	Response **OK**
Execution Command **AT+CGMI**	Response TA returns manufacturer identification text. **Quectel_Ltd** **Quectel_M66** **Revision: MTK 0828** **OK**
Maximum Response Time	300ms
Reference GSM 07.07	

2.7. AT+CGMM Request Model Identification

AT+CGMM Request Model Identification	
Test Command **AT+CGMM=?**	Response **OK**
Execution Command **AT+CGMM**	Response TA returns product model identification text. **Quectel_M66** **OK**
Maximum Response Time	300ms
Reference GSM 07.07	

2.8. AT+CGMR Request TA Revision Identification of Software Release

AT+CGMR Request TA Revision Identification of Software Release	
Test Command **AT+CGMR=?**	Response **OK**
Execution Command **AT+CGMR**	Response TA returns product software version identification text.

Quectel Confidential

	Revision: <revision> **OK**
Maximum Response Time	300ms
Reference GSM 07.07	

Parameter

<revision>	Product software version identification text

2.9. AT+GSN Request International Mobile Equipment Identity (IMEI)

AT+GSN Request International Mobile Equipment Identity (IMEI)	
Test Command **AT+GSN=?**	Response **OK**
Execution Command **AT+GSN**	Response TA reports the IMEI (International Mobile Equipment Identity) number in information text which permit the user to identify the individual ME device. **<sn>** **OK**
Maximum Response Time	300ms
Reference V.25ter	

Parameter

<sn>	IMEI of the telephone

NOTE

The serial number (**IMEI**) is varied with the individual ME device.

Quectel Confidential

2.10. AT+CGSN Request Product Serial Number Identification (Identical with +GSN)

AT+CGSN Request Product Serial Number Identification (Identical with +GSN)	
Test Command **AT+CGSN=?**	Response **OK**
Execution Command **AT+CGSN**	Response **<sn>** **OK**
Maximum Response Time	300ms
Reference GSM 07.07	

NOTE

See **+GSN.**

2.11. AT+QGSN Request Product Serial Number Identification (IMEI)

AT+QGSN Request Product Serial Number Identification (IMEI)	
Test Command **AT+QGSN=?**	Response **OK**
Execution Command **AT+QGSN**	Response **+QGSN: <sn>** **OK**
Maximum Response Time	300ms
Reference GSM 07.07	

Parameter

<sn>	A string parameter which indicates the IMEI of the telephone

Quectel Confidential

NOTE

The serial number (**IMEI**) is varied with the individual ME device.

Example

```
AT+QGSN                          //Query the IMEI
+QGSN: "865734020000749"

OK
```

2.12. AT&F Set all Current Parameters to Manufacturer Defaults

AT&F Set all Current Parameters to Manufacturer Defaults	
Execution Command **AT&F[<value>]**	Response TA sets all current parameters to the manufacturer defined profile. **OK**
Maximum Response Time	300ms
Reference V.25ter	

Parameter

<value>	0	Set all TA parameters to manufacturer defaults

2.13. AT&V Display Current Configuration

AT&V Display Current Configuration	
Execution Command **AT&V[<n>]**	Response TA returns the current parameter setting. **ACTIVE PROFILE** <current configurations text> **OK**
Maximum Response Time	300ms
Reference	

Quectel Confidential

V.25ter	

Parameter

<n>	0	Profile number

Table 2: AT&V Display Current Configuration List

AT&V or AT&V0
AT&V ACTIVE PROFILE E: 1 Q: 0 V: 1 X: 4 S0: 0 S2: 43 S3: 13 S4: 10 S5: 8 S6: 2 S7: 60 S8: 2 S10: 15 +CR: 0 +FCLASS: 0 +CMGF: 0 +CSDH: 0 +ILRR: 0 +CMEE: 1 +CBST: 7,0,1 +IFC: 0,0 +ICF: 3,3 +CNMI: 2,1,0,0,0 +CSCS: "GSM" +IPR: 0 &C: 1 &D: 0 +CSTA: 129 +CRLP: 61,61,128,6,0,3 +CCWE: 0

Quectel Confidential

```
+QSIMSTAT: 0
+CMUX: -1
+CCUG: 0,10,0
+CLIP: 0
+COLP: 0
+CCWA: 0
+CAOC: 1
+CLIR: 0
+CUSD: 0
+CREG: 0
+QSIMDET: 0,0,0
+QMIC: 4,9,8
+QECHO(NORMAL_AUDIO): 253,96,16388,57351,0
+QECHO(Earphone_AUDIO): 253,0,10756,57351,1
+QECHO(LoudSpk_AUDIO): 224,96,5256,57351,2
+QSIDET(NORMAL_AUDIO): 80
+QSIDET(HEADSET_AUDIO): 144
+QCLIP: 0
+QCOLP: 0
+CSNS: 0
OK
```

2.14. AT&W Store Current Parameter to User Defined Profile

AT&W Store Current Parameter to User Defined Profile	
Execution Command **AT&W[<n>]**	Response TA stores the current parameter setting in the user defined profile. **OK**
Maximum Response Time	300ms
Reference V.25ter	

Parameter

<n>	0	Profile number to store to

Quectel Confidential

NOTE

The profile defined by user is stored in nonvolatile memory.

2.15. ATQ Set Result Code Presentation Mode

ATQ Set Result Code Presentation Mode	
Execution Command **ATQ[<n>]**	Response This parameter setting determines whether or not the TA transmits any result code to the TE. Information text transmitted in response is not affected by this setting. If **<n>**=0: **OK** If **<n>**=1: (none)
Maximum Response Time	300ms
Reference V.25ter	

Parameter

<n>	0	TA transmits result code
	1	Result codes are suppressed and not transmitted

2.16. ATV TA Response Format

ATV TA Response Format	
Execution Command **ATV[<value>]**	Response This parameter setting determines the contents of the header and trailer transmitted with result codes and information responses. When **<value>**=0 **0** When **<value>**=1 **OK**
Maximum Response Time	300ms

Quectel Confidential

Reference V.25ter	

Parameter

<value>	0	Information response: **<text><CR><LF>** Short result code format: **<numeric code><CR>**
	1	Information response: **<CR><LF><text><CR><LF>** Long result code format: **<CR><LF><verbose code><CR><LF>**

NOTE

The result codes, their numeric equivalents and brief descriptions of the use of each are listed in the following table.

Example

```
ATV1                                  //Set <value>=1
OK
AT+CSQ
+CSQ: 30,0

OK                                    //When <value>=1 result code is OK
ATV0                                  //Set <value>=0
0
AT+CSQ
+CSQ: 30,0
0                                     //When <value>=0 result code is 0
```

Table 3: ATV0&ATV1 Result Codes Numeric Equivalents and Brief Descriptions

ATV1	ATV0	Description
OK	0	Acknowledges execution of a command
CONNECT	1	A connection has been established; the DCE is moving from command state to online data state
RING	2	The DCE has detected an incoming call signal from network
NO CARRIER	3	The connection has been terminated or the attempt to establish a connection failed
ERROR	4	Command not recognized, command line maximum

Quectel Confidential

		length exceeded, parameter value invalid, or other problem with processing the command line
NO DIALTONE	6	No dial tone detected
BUSY	7	Engaged (busy) signal detected
NO ANSWER	8	"@" (Wait for Quiet Answer) dial modifier was used, but remote ringing followed by five seconds of silence was not detected before expiration of the connection timer (S7)
PROCEEDING	9	An AT command is being processed
CONNECT <text>	Manufacturer-specific	Same as **CONNECT**, but includes manufacturer-specific text that may specify DTE speed, line speed, error control, data compression, or other status

2.17. ATX Set CONNECT Result Code Format and Monitor Call Progress

ATX Set CONNECT Result Code Format and Monitor Call Progress	
Execution Command **ATX[<value>]**	Response This parameter setting determines whether or not the TA detected the presence of dial tone and busy signal and whether or not TA transmits particular result codes. **OK**
Maximum Response Time	300ms
Reference V.25ter	

Parameter

<value>	0	**CONNECT** result code only returned, dial tone and busy detection are both disabled
	1	**CONNECT<text>** result code only returned, dial tone and busy detection are both disabled
	2	**CONNECT<text>** result code returned, dial tone detection is enabled, busy detection is disabled
	3	**CONNECT<text>** result code returned, dial tone detection is disabled, busy detection is enabled
	4	**CONNECT<text>** result code returned, dial tone and busy detection are both enabled

Quectel Confidential

NOTES

1. If parameter is omitted, the command has the same behavior of ATX0.
2. The factory default is **<value>**=4.

2.18. ATZ Set all Current Parameters to User Defined Profile

ATZ Set all Current Parameters to User Defined Profile	
Execution Command **ATZ[<value>]**	Response TA sets all current parameters to the user defined profile. **OK**
Maximum Response Time	300ms
Reference V.25ter	

Parameter

<value>	0	Reset to profile number 0

NOTES

1. Profile defined by user is stored in nonvolatile memory.
2. If the user profile is invalid, it will default to the factory default profile.
3. Any additional commands on the same command line are ignored.

2.19. AT+CFUN Set Phone Functionality

AT+CFUN Set Phone Functionality	
Test Command **AT+CFUN=?**	Response **+CFUN:** (list of supported **<fun>**s), (list of supported **<rst>**s) **OK**
Read Command **AT+CFUN?**	Response **+CFUN: <fun>** **OK**

Quectel Confidential

Write Command **AT+CFUN=<fun>[,<rst>]**	Response **OK** If error is related to ME functionality: **+CME ERROR: <err>**
Maximum Response Time	15s, determined by network.
Reference GSM 07.07	

Parameter

<fun>	0	Minimum functionality
	1	Full functionality (Default)
	4	Disable phone both transmit and receive RF circuits
<rst>	0	Do not reset the ME before setting it to **<fun>** power level This is default when **<rst>** is not given
	1	Reset the ME before setting it to **<fun>** power level

Example

```
AT+CFUN=0                          //Switch phone to minimum functionality
+CPIN: NOT READY

OK
AT+COPS?
+COPS: 0                           //No operator is registered

OK
AT+CPIN?
+CME ERROR: 13                     //SIM failure
AT+CFUN=1                          //Switch phone to full functionality
OK

+CPIN: SIM PIN
AT+CPIN=1234
+CPIN: READY

OK

Call Ready
AT+CPIN?
+CPIN: READY
```

Quectel Confidential

```
OK
AT+COPS?
+COPS: 0,0,"CHINA MOBILE"                    //Operator is registered

OK
```

2.20. AT+QPOWD Power off

AT+QPOWD Power off	
Write Command **AT+QPOWD=<n>**	Response When **<n>**=0 **OK** When **<n>**=1 **NORMAL POWER DOWN**
Maximum Response Time	300ms
Reference	

Parameter

<n>	0	Urgent power off (Do not send out URC "**NORMAL POWER DOWN**")
	1	Normal power off (Send out URC "**NORMAL POWER DOWN**")

Example

```
AT+QPOWD=0
OK                                           //Urgent power off, returned OK
AT+QPOWD=1
NORMAL POWER DOWN                            //Normal power off, send out URC"NORMAL
                                               POWER DOWN"
```

2.21. AT+CMEE Report Mobile Equipment Error

AT+CMEE Report Mobile Equipment Error	
Test Command **AT+CMEE=?**	Response **+CMEE:** (list of supported **<n>**s) **OK**

Quectel Confidential

Read Command **AT+CMEE?**	Response **+CMEE: <n>** **OK**
Write Command **AT+CMEE=[<n>]**	Response TA disables or enables the use of result code **+CME ERROR: <err>** as an indication of an error related to the functionality of the ME. **OK**
Maximum Response Time	300ms
Reference GSM 07.07	

Parameter

<n>	0	Disable result code
	1	Enable result code and use numeric values
	2	Enable result code and use verbose values

Example

```
AT+CMEE=0                          //Disable result code
OK
AT+CPIN=1234
ERROR                              //Only "ERROR" will be displayed
AT+CMEE=1                          //Enable error result code with numeric values
OK
AT+CPIN=1234
+CME ERROR: 10
AT+CMEE=2                          //Enable error result code with verbose (string)
                                     values
OK
AT+CPIN=1234
+CME ERROR: SIM not inserted
```

2.22. AT+CSCS Select TE Character Set

AT+CSCS Select TE Character Set	
Test Command **AT+CSCS=?**	Response **+CSCS:** (list of supported **<chset>**s)

Quectel Confidential

	OK
Read Command **AT+CSCS?**	Response **+CSCS: <chset>** **OK**
Write Command **AT+CSCS=<chset>**	Response Set character set **<chset>** which is used by the TE. The TA can then convert character strings correctly between the TE and ME character sets. **OK**
Maximum Response Time	300ms
Reference GSM 07.07	

Parameter

<chset>	"GSM"	GSM default alphabet
	"HEX"	Character strings consist only of hexadecimal numbers from 00 to FF
	"IRA"	International reference alphabet
	"PCCP437"	PC character set code
	"UCS2"	UCS2 alphabet
	"8859-1"	ISO 8859 Latin 1 character set

Example

```
AT+CSCS?                                  //Query the current character set
+CSCS: "GSM"

OK
AT+CSCS="UCS2"                            //Set the character set to “UCS2”
OK
AT+CSCS?
+CSCS: "UCS2"

OK
```

Quectel Confidential

2.23. AT+GCAP Request Complete TA Capabilities List

AT+GCAP Request Complete TA Capabilities List	
Test Command **AT+GCAP=?**	Response **OK**
Execution Command **AT+GCAP**	Response TA reports a list of additional capabilities. **+GCAP: <name>** **OK**
Maximum Response Time	300ms
Reference V.25ter	

Parameter

<name>	+CGSM	GSM function is supported
	+FCLASS	FAX function is supported

Quectel Confidential

3 Serial Interface Control Commands

3.1. AT&C Set DCD Function Mode

AT&C Set DCD Function Mode	
Execution Command **AT&C[<value>]**	Response This parameter determines how the state of circuit 109(DCD) relates to the detection of received line signal from the distant end. **OK**
Maximum Response Time	300ms
Reference V.25ter	

Parameter

<value>	0	DCD line is always ON
	1	DCD line is ON only in the presence of data carrier

3.2. AT&D Set DTR Function Mode

AT&D Set DTR Function Mode	
Execution Command **AT&D[<value>]**	Response This parameter determines how the TA responds when circuit 108/2(DTR) is changed from the ON to the OFF condition during data mode. **OK**
Maximum Response Time	300ms
Reference V.25ter	

Quectel Confidential

Parameter

<value>	0	TA ignores status on DTR
	1	ON->OFF on DTR: Change to command mode with remaining the connected call
	2	ON->OFF on DTR: Disconnect data call, change to command mode. During state DTR=OFF auto-answer is off

3.3. AT+ICF Set TE-TA Control Character Framing

AT+ICF Set TE-TA Control Character Framing	
Test Command **AT+ICF=?**	Response **+ICF:** (list of supported **<format>**s), (list of supported **<parity>**s) **OK**
Read Command **AT+ICF?**	Response **+ICF: <format>,<parity>** **OK**
Write Command **AT+ICF=<format>[,<parity>]]**	Response This parameter setting determines the serial interface character framing format and parity received by TA from TE. **OK**
Maximum Response Time	300ms
Reference V.25ter	

Parameter

<format>	1	8 data 0 parity 2 stop
	2	8 data 1 parity 1 stop
	3	8 data 0 parity 1 stop
	4	7 data 0 parity 2 stop
	5	7 data 1 parity 1 stop
	6	7 data 0 parity 1 stop
<parity>	0	Odd
	1	Even
	2	Mark (1)
	3	Space (0)

Quectel Confidential

NOTES

1. The command is applied for command state.
2. The **<parity>** field is ignored if the **<format>** field specifies no parity.

3.4. AT+IFC Set TE-TA Local Data Flow Control

AT+IFC Set TE-TA Local Data Flow Control	
Test Command **AT+IFC=?**	Response **+IFC:** (list of supported **<dce_by_dte>**s), (list of supported **<dte_by_dce>**s) **OK**
Read Command **AT+IFC?**	Response **+IFC: <dce_by_dte>,<dte_by_dce>** **OK**
Write Command **AT+IFC=<dce_by_dte>,<dte_by_dce>**	Response This parameter setting determines the data flow control on the serial interface for data mode. **OK**
Maximum Response Time	300ms
Reference V.25ter	

Parameter

<dce_by_dte>	Specifies the method will be used by TE when receiving data from TA	
	0	None
	1	XON/XOFF, do not pass characters on to data stack
	2	RTS flow control
	3	XON/XOFF, pass characters on to data stack
<dte_by_dce>	Specifies the method will be used by TA when receiving data from TE	
	0	None
	1	XON/XOFF
	2	CTS flow control

Quectel Confidential

NOTE

This flow control is applied for data mode.

Example

```
AT+IFC=2,2                    //Open the hardware flow control
OK
AT+IFC?
+IFC: 2,2

OK
```

3.5. AT+ILRR Set TE-TA Local Data Rate Reporting Mode

AT+ILRR Set TE-TA Local Data Rate Reporting Mode	
Test Command **AT+ILRR=?**	Response **+ILRR:** (list of supported **<value>**s) **OK**
Read Command **AT+ILRR?**	Response **+ILRR: <value>** **OK**
Write Command **AT+ILRR=[<value>]**	Response This parameter setting determines whether or not an intermediate result code of local rate is reported when the connection is established. The rate is applied after the final result code of the connection is transmitted to TE. **OK**
Maximum Response Time	300ms
Reference V.25ter	

Parameter

<value>	0	Disables reporting of local port rate
	1	Enables reporting of local port rate

Quectel Confidential

NOTE

If the **<value>** is set to 1, the following intermediate result will come out on connection to indicate the port rate settings.

+ILRR:<rate>

<rate>	Port rate setting on call connection in Baud per second 300 1200 2400 4800 9600 14400 19200 28800 38400 57600 115200

3.6. AT+IPR Set TE-TA Fixed Local Rate

AT+IPR Set TE-TA Fixed Local Rate	
Test Command **AT+IPR=?**	Response **+IPR:** (list of supported auto detectable **<rate>**s),(list of supported fixed-only**<rate>**s) **OK**
Read Command **AT+IPR?**	Response **+IPR: <rate>** **OK**
Write Command **AT+ IPR=<rate>**	Response This parameter setting determines the data rate of the TA on the serial interface. After the delivery of any result code associated with the current command line, the rate of command takes effect. **OK**
Maximum Response Time	300ms
Reference V.25ter	

Quectel Confidential

Parameter

<rate>	Baud rate per second 0 (Autobauding) 75 150 300 600 1200 2400 4800 9600 14400 19200 28800 38400 57600 115200

NOTES

1. The default configuration of **AT+IPR** is adaptive baud enabled (**AT+IPR=0**).
2. If a fixed baud rate is set, make sure that both TE (DTE, usually external processor) and TA (DCE, Quectel GSM module) are configured to the same rate. If adaptive baud is enabled, the TA could automatically recognize the baud rate currently used by the TE after receiving "**AT**" or "**at**" string.
3. The value of **AT+IPR** cannot be restored with **AT&F** and **ATZ**, but it is still storable with **AT&W** and visible in **AT&V**.
4. In multiplex mode, the baud rate cannot be changed by the write command **AT+IPR=<rate>**, and the setting is invalid and not stored even if **AT&W** is executed after the write command.
5. A selected baud rate takes effect after the write commands are executed and acknowledged by "OK".

Example

```
AT+IPR=115200                    //Set fixed baud rate to 115200

OK
AT&W                             //Store current setting, that is, the serial
                                   communication speed is 115200 after restart
                                   module
OK
AT+IPR?
+IPR: 115200

OK
```

Quectel Confidential

3.6.1. Adaptive Baud

To take advantage of adaptive baud mode, specific attention must be paid to the following requirements:

1. Adaptive baud synchronization between TE and TA.
   - Ensure that TE and TA are correctly synchronized and the baud rate used by the TE is detected by the TA. To allow the baud rate to be synchronized simply use an "**AT**" or "**at**" string. This is necessary after customer activates adaptive baud or when customer starts up the module with adaptive baud enabled.
   - It is recommended to wait for 2 to 3 seconds before sending the first "**AT**" or "**at**" string after the module is started up with adaptive baud enabled. Otherwise undefined characters might be returned.

2. Restriction on adaptive baud operation.
   - The serial interface shall be used with 8 data bits, no parity and 1 stop bit (factory setting).
   - The command "**A/**" can't be used.
   - Only the string "**AT**" or "**at**" can be detected (either "**AT**" or "**at**").
   - URCs that may be issued before the TA detects a new baud rate by receiving the first AT character, and they will be sent at the previously detected baud rate.
   - If TE's baud rate is changed after TA has recognized the earlier baud rate, loss of synchronization between TE and TA would be encountered and an "**AT**" or "**at**" string must be re-sent by TE to regain synchronization on baud rate. To avoid undefined characters during baud rate resynchronization and the possible malfunction of resynchronization, it is not recommended to switch TE's baud rate when adaptive baud is enabled. Especially, this operation is forbidden in data mode.

3. Adaptive baud and baud rate after restarting.
   - In the adaptive baud mode, the detected baud rate is not saved. Therefore, resynchronization is required after restarting the module.
   - Unless the baud rate is determined, an incoming CSD call can't be accepted. This must be taken into account when adaptive baud and auto-answer mode (**ATS0≠0**) are enabled at the same time, especially if SIM PIN 1 authentication is done automatically and the setting **ATS0≠0** is stored to the user profile with **AT&W**.
   - Until the baud rate is synchronized, URCs after restarting will not be output when adaptive baud is enabled.

4. Adaptive baud and multiplex mode.

   If adaptive baud is active it is not recommended to switch to multiplex mode.

5. Adaptive baud and Windows modem.
   - The baud rate used by Windows modem can be detected while setting up a dial-up GPRS/CSD connection. However, some Windows modem drivers switch TE's baud rate to default value automatically after the GPRS call is terminated. In order to prevent no response to the Windows

Quectel Confidential

modem when it happens, it is not recommended to establish the dial-up GPRS/CSD connection in adaptive baud mode.

- Based on the same considerations, it is also not recommended to establish the FAX connection in adaptive baud mode for PC FAX application, such as WinFax.

NOTE

To assure reliable communication and avoid any problem caused by undetermined baud rate between DCE and DTE, it is strongly recommended to configure a fixed baud rate and save it instead of using adaptive baud after start-up.

3.7. AT+CMUX Multiplexer Control

AT+CMUX Multiplexer Control	
Test Command **AT+CMUX=?**	Response **+CMUX:** (list of supported **<mode>**s), (**<subset>**s), (**<port_speed>**s),(**<N1>**s),(**<T1>**s),(**<N2>**s),(**<T2>**s),(**<T3>**s), (**<k>**s) **OK**
Read Command **AT+CMUX?**	Response **+CMUX:<mode>,0,5,127,10,3,30,10,2** **OK** **ERROR**
Write Command **AT+CMUX=[<mode>[,<subset>[,<port_speed>[,<N1>[,<T1>[,<N2>[,<T2>[,<T3>[,<k>]]]]]]]]]**	Response **+CME ERROR: <err>**
Maximum Response Time	300ms
Reference GSM 07.07	

Parameter

<mode>	Multiplexer transparency mechanism 0 Basic option
<subset>	The way by which the multiplexer control channel is set up 0 UIH frames used only
<port_speed>	Transmission rate

Quectel Confidential

	5 115200bit/s
<N1>	Maximum frame size 127
<T1>	Acknowledgement timer in a unit of ten milliseconds 10
<N2>	Maximum number of re-transmissions 3
<T2>	Response timer for the multiplexer control channel in a unit of ten milliseconds 30
<T3>	Wake up response timers in seconds 10
<k>	Window size, for Advanced operation with Error Recovery options 2

NOTES

1. Advanced option with Error Recovery options is not supported.
2. The multiplexing transmission rate is fixed according to the current serial baud rate. It is recommended to enable multiplexing protocol under 115200 bit/s baud rate.
3. Multiplexer control channels are listed as follows:

Channel Number	Type	DLCI
None	Multiplexer Control	0
1	07.07 and 07.05	1
2	07.07 and 07.05	2
3	07.07 and 07.05	3
4	07.07 and 07.05	4

Quectel Confidential

4 Status Control Commands

4.1. AT+CEER Extended Error Report

AT+CEER Extended Error Report	
Test Command **AT+CEER=?**	Response **OK**
Execution Command **AT+CEER**	Response TA returns an extended report of the reason for the last call release. **+CEER: <locationID>,<cause>** **OK**
Maximum Response Time	300ms
Reference GSM 07.07	

Parameter

<locationID>	Location ID as number code. Location IDs are listed in Section 8.3.1. Each ID is related with anther table that contains a list of **<cause>**s.
<cause>	Reason for last call release as number code. The number codes are listed in several tables, sorted by different categories. The tables can be found proceeding from the Location ID given in Section 8.3.1

Example

```
AT+CEER                                  //Query error reporting in normal state, return “No error”
+CEER: 0,0

OK
ATD10086;
OK
AT+CLCC
+CLCC: 1,0,0,0,0,"10086",129,""
```

Quectel Confidential

OK	
NO CARRIER	//Established a call and the remote party hangs up the call
AT+CEER	//Query error reporting, the **<locationID>=1** means "Cause for protocol stack (PS) layer", **<cause>=16** means "Normal call clearing"
+CEER: 1,16	
OK	

4.2. AT+CPAS Mobile Equipment Activity Status

AT+CPAS Mobile Equipment Activity Status	
Test Command **AT+CPAS=?**	Response **+CPAS:** (list of supported **<pas>**s) **OK**
Execution Command **AT+CPAS**	Response TA returns the activity status of ME. **+CPAS: <pas>** **OK** If error is related to ME functionality: **+CME ERROR: <err>**
Maximum Response Time	300ms
Reference GSM 07.07	

Parameter

<pas>	0	Ready
	2	Unknown (ME is not guaranteed to respond to instructions)
	3	Ringing
	4	Call in progress or call hold

Example

AT+CPAS	
+CPAS: 0	//Module is idle

Quectel Confidential

```
OK
ATD10086;
OK
AT+CLCC
+CLCC: 1,0,3,0,0,"10086",129,""

OK
AT+CPAS
+CPAS: 3                                    //Module is incoming call (ringing)

OK
AT+CLCC
+CLCC: 1,0,0,0,0,"10086",129,""

OK
AT+CPAS
+CPAS: 4                                    //Call in progress

OK
```

4.3. AT+QINDRI Indicate RI When Using URC

AT+QINDRI Indicate RI When Using URC	
Test Command **AT+QINDRI=?**	Response **+QINDRI:** (list of supported **<status>**s) **OK**
Read Command **AT+QINDRI?**	Response **+QINDRI: <status>** **OK**
Write Command **AT+QINDRI=<status>**	Response **OK** **ERROR**
Maximum Response Time	300ms
Reference	

Quectel Confidential

Parameter

<status>	0	Off
	1	On

4.4. AT+QMOSTAT Show State of Mobile Originated Call

AT+QMOSTAT Show State of Mobile Originated Call	
Test Command **AT+QMOSTAT=?**	Response **+QMOSTAT:** (list of supported **<mode>**s) **OK**
Read Command **AT+QMOSTAT?**	Response **+QMOSTAT: <mode>** **OK**
Write Command **AT+QMOSTAT=<mode>**	Response **OK** **ERROR**
Maximum Response Time	300ms
Reference	

Parameter

<mode>	0	Do not show call state of mobile originated call
	1	Show call state of mobile originated call. After dialing call numbers, the URC strings of MO RING will be sent if the other call side is alerted and the URC strings of MO CONNECTED will be sent if the call is established

Example

```
AT+QMOSTAT=1                    //Show call state of mobile originated call
OK
ATD10086;
OK

MO RING                         //The other call side is alerted

MO CONNECTED                    //The call is established
```

Quectel Confidential

4.5. AT+QIURC Enable or Disable Initial URC Presentation

AT+QIURC Enable or Disable Initial URC Presentation	
Test Command **AT+QIURC=?**	Response **+QIURC:** (list of supported **<mode>**s) **OK**
Read Command **AT+QIURC?**	Response **+QIURC: <mode>** **OK**
Write Command **AT+QIURC=<mode>**	Response **OK** **ERROR**
Maximum Response Time	300ms
Reference	

Parameter

<mode>	0	Disable URC presentation
	1	Enable URC presentation

NOTE

When the module powers on and initialization procedure is over. URC "**Call Ready**" will be presented if **<mode>** is 1.

4.6. AT+QEXTUNSOL Enable/Disable Proprietary Unsolicited Indications

AT+QEXTUNSOL Enable/Disable Proprietary Unsolicited Indications	
Test Command **AT+QEXTUNSOL=?**	Response **+QEXTUNSOL:** (list of supported **<extunsol>**s) **OK**
Write Command **AT+QEXTUNSOL=<exunsol>,<mode>**	Response **OK**

Quectel Confidential

	ERROR
Maximum Response Time	300ms
Reference	

Parameter

<extunsol> String type. Values currently reserved by the present document

"SQ" Signal Quality Report. Displays signal strength and channel bit error rate (similar to **AT+CSQ**) in form **+CSQN: <rssi>, <ber>**when values change.

"FN" Forbidden network available only. When returning to a non-registered state, this indicates whether all the available PLMNs are forbidden.

"MW" SMS Message waiting. On receiving an SMS (as indicated by the **+CMTI** indication) the SMS is decoded and checked to see if it contains one or more of the message waiting indications (i.e. voicemail, email, fax etc.). If so, an unsolicited indication is shown in the form for each message type:

+QMWT: <store>,<index>,<voice>,<fax>,<email>,<other>. Where **<store>** is the message store containing the SM, index is the message index and **<voice>**, **<email>**, **<fax>**, **<other>** contain the number of waiting messages (with '0' defined as clear indication, non-zero for one or more waiting messages) or blank for not specified in this message.

"UR" Unsolicited result code. Produces an unsolicited indication in the following call state transition. Multiple notifications may occur for the same transition **+QGURC: <event>**. Where **<event>** describes the current call state:

<event>:

0 Terminated active call, at least one held call remaining
1 Attempt to make an Mobile Originated call
2 Mobile Originated Call has failed for some reason
3 Mobile Originated call is ringing
4 Mobile Terminated call is queued (Call waiting)
5 Mobile Originated Call now has been connected
6 Mobile Originated or Mobile Terminated call has been disconnected
7 Mobile Originated or Mobile Terminated call hung up.
8 Mobile Originated call dialed a non-emergency number in emergency mode
9 No answer for mobile Originated call
10 Remote number busy for Mobile Originated call

"BC" Battery Charge. Displays battery connection status and battery charge level (similar to **AT+CBC**) in form **+CBCN: <bcs>,<bcl>** when values change.

"BM" Band mode. Displays band mode (similar to **AT+QBAND**) in form **+QBAND: <band>** when value changes.

"SM" Additional SMS Information. Displays additional information about SMS events in

Quectel Confidential

		the form of Unsolicited messages of the following format **+TSMSINFO: <CMS error info>** where **<CMS error info>** is a standard CMS error in the format defined by the **AT+CMEE** command i.e. either a number or a string.
	"CC"	Call information. Displays the disconnected call ID and the remaining call numbers after one of the call is disconnected. **+CCINFO: <Call id disconnected>,<Remain calls>**
<mode>	0	Disable
	1	Enable
	2	Query

4.7. AT+QINISTAT Query State of Initialization

AT+QINISTAT Query State of Initialization	
Test Command **AT+QINISTAT=?**	Response **OK**
Execution Command **AT+QINISTAT**	Response **+QINISTAT: <state>** **OK**
Maximum Response Time	300ms
Reference	

Parameter

<state>	0	No initialization
	1	Ready to execute AT command
	2	Phonebook has finished initialization
	3	SMS has finished initialization

NOTE

When **<state>** is 3, it also means initialization of SIM card related functions has finished.

Quectel Confidential

4.8. AT+QNSTATUS Query GSM Network Status

AT+QNSTATUS Query GSM Network Status	
Test Command **AT+QNSTATUS=?**	Response **OK**
Execution Command **AT+QNSTATUS**	Response **+QNSTATUS: <status>** **OK** If error is related to ME functionality: **+CME ERROR: <err>**
Maximum Response Time	300ms
Reference	

Parameter

<status>	255	Not ready to retrieve network status
	0	Work in normal state
	1	No available cell
	2	Only limited service is available

4.9. AT+QNITZ Network Time Synchronization

AT+QNITZ Network Time Synchronization	
Test Command **AT+QNITZ=?**	Response **+QNITZ:** (list of supported **<enable>**s) **OK**
Read Command **AT+QNITZ?**	Response **+QNITZ: <enable>** **OK**
Write Command **AT+QNITZ=<enable>**	Response **OK** If error is related to ME functionality: **+CME ERROR: <err>**

Quectel Confidential

Maximum Response Time	300ms
Reference	

Parameter

<enable>	0	Disable to synchronize time from GSM network
	1	Enable to synchronize time from GSM network
	If the function is enabled, on receiving network time message, an unsolicited indication is shown in the form: "**+QNITZ: <time>,<ds>**"	
<time>	String type value. Format is "yy/MM/dd,hh:mm:ss±zz,ds", where characters indicate year (two last digits), month, day, hour, minutes, seconds and time zone (indicates the difference, expressed in quarters of an hour, between the local time and GMT; range: -47...+48). E.g. 6th of May 2004, 22:10:00 GMT+2 hours	
<ds>	Daylight Saving Time. It is zero equal to "04/05/06,22:10:00+08,0"	

NOTE

This function needs support of local GSM network. And the unsolicited also can be read by **AT+QLTS** command later.

4.10. AT+QLTS Obtain Latest Network Time Synchronized

AT+QLTS Obtain Latest Network Time Synchronized	
Test Command **AT+QLTS=?**	Response **OK**
Execution Command **AT+QLTS**	Response **+QLTS: <time>,<ds>** **OK** If error is related to ME functionality: **+CME ERROR: <err>** Execution Command returns latest time for Network synchronization.
Maximum Response Time	300ms
Reference	

Quectel Confidential

Parameter

<time>	String type value. Format is "yy/MM/dd,hh:mm:ss±zz", where characters indicate year (two last digits), month, day, hour, minutes, seconds and time zone (indicates the difference, expressed in quarters of an hour, between the local time and GMT; range: -47...+48). E.g. 6th of May 2004, 22:10:00 GMT+2 hours.
<ds>	Daylight Saving Time. It is zero equals to "04/05/06,22:10:00+08,0"

4.11. AT+QCGTIND Circuit Switched Call or GPRS PDP Context Termination Indication

AT+QCGTIND Circuit Switched Call or GPRS PDP Context Termination Indication	
Test Command **AT+QCGTIND=?**	Response **+QCGTIND:** (list of supported **<n>**s) **OK**
Read Command **AT+QCGTIND?**	Response **+QCGTIND: <n>** **OK**
Write Command **AT+QCGTIND=<n>**	Response **OK** If error is related to ME functionality: **+CME ERROR: <err>**
Maximum Response Time	300ms
Reference	

Parameter

<n>	A numeric parameter which indicates whether to enable an unsolicited event code indicating whether a circuit switched voice call, circuit switched data call or GPRS session has been terminated 0 Disable 1 Enable
<type>	Connection type 0 Circuit switched voice call 1 Circuit switched data call 2 PPP connection

Quectel Confidential

NOTE

When enabled, an unsolicited result code is returned after the connection has been terminated **+QCGTIND: <type>**.

Example

```
ATD10086;
OK

+QCGTIND: 0                //A circuit switched voice call has been terminated

NO CARRIER
```

4.12. AT+CTZU Network Time Synchronization and Update the RTC Time

AT+CTZU Network Time Synchronization and Update the RTC Time	
Test Command **AT+CTZU=?**	Response **+CTZU:** (list of supported **<mode>**s) **OK**
Read Command **AT+CTZU?**	Response **+CTZU: <mode>** **OK**
Write Command **AT+CTZU=<mode>**	Response **OK** If error is related to ME functionality: **+CME ERROR: <err>**
Maximum Response Time	300ms
Reference	

Parameter

<mode>	0	Disable automatic update RTC time via NITZ.
	1	Update network synchronized time to RTC and save time zone into NVRAM.
	2	Update GMT time with time zone to RTC, save time zone into NVRAM, ignore

Quectel Confidential

		daylight saving time.
	3	Update localized time and time zone to RTC, and save time zone into NVRAM.
	4	Same with **<mode>**=2

NOTE

This function needs support of local GSM network. After setting the **AT+CTZU**, the value will be automatically saved into flash. After the module is restarted, it can also take effect.

4.13. AT+CTZR Network Time Synchronization Report

AT+CTZR Network Time Synchronization Report	
Test Command **AT+CTZR=?**	Response **+CTZR:** (list of supported **<mode>**s) **OK**
Read Command **AT+CTZR?**	Response **+CTZR: <mode>** **OK**
Write Command **AT+CTZR=<mode>**	Response **OK** If error is related to ME functionality: **+CME ERROR: <err>**
Maximum Response Time	300ms
Reference	

Parameter

<mode>	0	Disable time zone change event reporting
	1	Enable time zone change event reporting by unsolicited result code **+CTZV: <tz>**
	2	Enable extended time zone reporting by unsolicited result code **+CTZE: <tz>,<dst>,[<time>]**

NOTE

This function needs support of local GSM network. After setting the **AT+CTZU**, the value will be automatically saved into flash. After the module is restarted, it can take effect.

Quectel Confidential

5 SIM Related Commands

5.1. AT+CIMI Request International Mobile Subscriber Identity (IMSI)

AT+CIMI Request International Mobile Subscriber Identity (IMSI)	
Test Command **AT+CIMI=?**	Response **OK**
Execution Command **AT+CIMI**	Response TA returns <IMSI>for identifying the individual SIM which is attached to ME. **<IMSI>** **OK** If error is related to ME functionality: **+CME ERROR: <err>**
Maximum Response Time	300ms
Reference GSM 07.07	

Parameter

<IMSI>	International Mobile Subscriber Identity (string without double quotes)

Example

```
AT+CIMI
460023210226023                    //Query IMSI number of SIM which is attached to ME

OK
```

Quectel Confidential

5.2. AT+CLCK Facility Lock

AT+CLCK Facility Lock	
Test Command **AT+CLCK=?**	Response **+CLCK:** (list of supported **<fac>**s) **OK**
Write Command **AT+CLCK=<fac>,<mode>,<passwd>[,<class>]**	Response This command is used to lock, unlock or interrogate a ME or a network facility **<fac>**. Password is normally needed to do such actions. When querying the status of a network service (**<mode>**=2) the response line for 'not active' case (**<status>**=0) should be returned only if service is not active for any **<class>**. If **<mode><>2** and command is successful: **OK** If **<mode>=2** and command is successful: **+CLCK: <status>[,<class1>[<CR><LF>** **+CLCK: <status>, class2....]]** **OK**
Maximum Response Time	5s
Reference GSM 07.07	

Parameter

<fac>	"PS"	PH-SIM (lock Phone to SIM card) (ME asks password when other than current SIM card inserted; ME may remember certain amount of previously used cards thus not requiring password when they are inserted)
	"SC"	SIM (lock SIM card) (SIM asks password in ME power-up and when this lock command is issued)
	"AO"	BAOC (Barr All Outgoing Calls) (refer to GSM02.88[6] clause 1)
	"OI"	BOIC (Barr Outgoing International Calls) (refer to GSM02.88[6] clause 1)
	"OX"	BOIC-exHC (Barr Outgoing International Calls except to Home Country) (refer to GSM02.88[6] clause 1)
	"AI"	BAIC (Barr All Incoming Calls) (refer to GSM02.88[6] clause 2)
	"IR"	BIC-Roam (Barr Incoming Calls when Roaming outside the home country) (refer to GSM02.88 [6] clause 2)
	"AB"	All Barring services (refer to GSM02.30[19]) (applicable only for **<mode>**=0)

Quectel Confidential

	"AG"	All out Going barring services (refer to GSM02.30[19])(applicable only for **<mode>**=0)
	"AC"	All in Coming barring services (refer to GSM02.30[19])(applicable only for **<mode>**=0)
	"FD"	SIM fixed dialing memory: If the mobile is locked to "FD", only the phone numbers stored to the "FD" memory can be dialed
	"PF"	Lock Phone to the very first SIM card
	"PN"	Network Personalization (refer to GSM 02.22)
	"PU"	Network subset Personalization (refer to GSM 02.22)
	"PP"	Service Provider Personalization (refer to GSM 02.22)
	"PC"	Corporate Personalization (refer to GSM 02.22)
<mode>	0	Unlock
	1	Lock
	2	Query status
<passwd>	Password	
<class>	1	Voice
	2	Data
	4	FAX
	7	All telephony except SMS (Default)
	8	Short message service
	16	Data circuit sync
	32	Data circuit async
<status>	0	Off
	1	On

Example

```
AT+CLCK="SC", 2
+CLCK: 0                          //Query the status of SIM card lock, 0-unlock

OK
AT+CLCK="SC",1,"1234"             //Lock SIM card, the password is 1234
OK
AT+CLCK="SC",2
+CLCK: 1                          //Query the status of SIM card lock, 1-lock

OK
AT+CLCK="SC",0,"1234"             //Unlock SIM card
OK
```

Quectel Confidential

5.3. AT+CPIN Enter PIN

AT+CPIN Enter PIN	
Test Command **AT+CPIN=?**	Response **OK**
Read Command **AT+CPIN?**	Response TA returns an alphanumeric string indicating whether or not some password is required. **+CPIN: <code>** **OK**
Write Command **AT+CPIN=<pin>[,<new pin>]**	Response TA stores a password which is necessary before it can be operated (SIM PIN, SIM PUK, PH-SIM PIN, etc.). If the PIN is to be entered twice, the TA shall automatically repeat the PIN. If no PIN request is pending, no action is taken and an error message, **+CME ERROR**, is returned to TE. If the PIN required is SIM PUK or SIM PUK2, the second pin is required. This second pin, **<new pin>**, is used to replace the old pin in the SIM **OK**
Maximum Response Time	5s
Reference GSM 07.07	

Parameter

<code>	READY	No further entry needed
	SIM PIN	ME is waiting for SIM PIN
	SIM PUK	ME is waiting for SIM PUK
	PH_SIM PIN	ME is waiting for phone to SIM card (antitheft)
	PH_SIM PUK	ME is waiting for SIM PUK (antitheft)
	SIM PIN2	PIN 2, e.g. it is possible to edit the FDN book only if preceding command was acknowledged with **+CME ERROR:17**
	SIM PUK2	Possible only if preceding command was acknowledged with error **+CME ERROR: 18**
<pin>	String type; password	
<new pin>	String type; If the PIN required is SIM PUK or SIMPUK2: new password	

Quectel Confidential

Example

```
AT+CPIN?
+CPIN: SIM PIN                    //Query PIN code is locked

OK
AT+CPIN=1234                      //PIN
+CPIN: READY

OK
AT+CPIN?                          //PIN has already been entered
+CPIN: READY

OK
AT+CPIN?
+CPIN: SIM PUK                    //Query PUK code is locked

OK
AT+CPIN="26601934","1234"         //Enter PUK and new PIN password
+CPIN: READY

OK
AT+CPIN?
+CPIN: READY                      //PUK has already been entered

OK
```

5.4. AT+CPWD Change Password

AT+CPWD Change Password	
Test Command **AT+CPWD=?**	Response TA returns a list of pairs which present the available facilities and the maximum length of their password. **+CPWD:** (list of supported **<fac>**s), (**<pwdlength>**s) **OK**
Write Command **AT+CPWD=<fac>,<oldpwd>,<newpwd>**	Response TA sets a new password for the facility lock function. **OK**
Maximum Response Time	5s

Quectel Confidential

Reference	
GSM 07.07	

Parameter

<fac>	"PS"	Phone locked to SIM (device code). The "PS" password may either be individually specified by the client or, depending on the subscription, supplied from the provider (e.g. with a prepaid mobile)
	"SC"	SIM (lock SIM card) (SIM asks password in ME power-up and when this lock Command issued)
	"AO"	BAOC (Barr All Outgoing Calls) (refer to GSM02.88[6] clause 1)
	"OI"	BOIC (Barr Outgoing International Calls) (refer to GSM02.88[6] clause 1)
	"OX"	BOIC-exHC (Barr Outgoing International Calls except to Home Country) (refer to GSM02.88[6] clause 1)
	"AI"	BAIC (Barr All Incoming Calls) (refer to GSM02.88[6] clause 2)
	"IR"	BIC-Roam (Barr Incoming Calls when Roaming outside the home country) (refer to GSM02.88 [6] clause 2)
	"AB"	All Barring services (refer to GSM02.30[19]) (applicable only for **<mode>**=0)
	"AG"	All outgoing barring services (refer to GSM02.30[19]) (applicable only for **<mode>**=0
	"AC"	All incoming barring services (refer to GSM02.30[19]) (applicable only for **<mode>**=0)
	"FD"	SIM fixed dialing memory feature
	"P2"	SIM PIN2
<pwdlength>	Integer. Max length of password	
<oldpwd>	Password specified for the facility from the user interface or with command	
<newpwd>	New password	

Example

```
AT+CPIN?
+CPIN: READY

OK
AT+CPWD="SC","1234","4321"          //Change SIM card password to “4321”
OK
AT+CPIN?                            //Restart module or re-activate the SIM card, query PIN
                                      code is locked
+CPIN: SIM PIN

OK
AT+CPIN="4321"                      //PIN must be entered to define a new password “4321”
+CPIN: READY
```

Quectel Confidential

OK

5.5. AT+CRSM Restricted SIM Access

AT+CRSM Restricted SIM Access	
Test Command **AT+CRSM=?**	Response **OK**
Write Command **AT+CRSM=<Command>[,<fileId>[,<P1>,<P2>,<P3>[,<data>]]]**	Response **+CRSM: <sw1>, <sw2> [,<response>]** **OK** **ERROR** **+CME ERROR: <err>**
Maximum Response Time	300ms
Reference GSM 07.07	

Parameter

<Command>	176 READ BINARY 178 READ RECORD 192 GET RESPONSE 214 UPDATE BINARY 220 UPDATE RECORD 242 STATUS All other values are reserved; refer to GSM 11.11
<fileId>	Integer type; this is the identifier for an elementary data file on SIM. Mandatory for every Command except STATUS
<P1>,<P2>,<P3>	Integer type; parameters passed on by the ME to the SIM. These parameters are mandatory for every command, except GET RESPONSE and STATUS. The values are described in GSM 11.11
<data>	Information which shall be written to the SIM (hexadecimal character format)
<sw1>,<sw2>	Integer type; information from the SIM about the execution of the actual command. These parameters are delivered to the TE in both cases, on successful or failed execution of the command
<response>	Response of a successful completion of the command previously issued (hexadecimal character format). STATUS and GET RESPONSE return data, which gives information about the current elementary data field. This information includes the type of file and its size (refer to GSM 11.11). After READ BINARY or READ RECORD command the requested data will be returned. The parameter is not returned after a successful UPDATE BINARY or UPDATE RECORD command

Quectel Confidential

Example

```
AT+CRSM=242
+CRSM: 145, 211, "000000007F100200000000000A13000C0400838A808A"

OK                                  //<sw1>=145,<sw2>=211,"000000007F100200000000000
                                      A13000C0400838A808A" which is the command
                                      previously return data, refer to GSM 11.11
```

5.6. AT+QCSPWD Change PS Super Password

AT+QCSPWD Change PS Super Password	
Test Command **AT+QCSPWD=?**	Response **OK**
Write Command **AT+QCSPWD=<oldpwd>,<newpwd>**	Response **OK** **ERROR**
Maximum Response Time	300ms
Reference	

Parameter

<oldpwd>	String type. Old password and length should be 8
<newpwd>	String type. New password and length should be 8

NOTES

1. Default value of **<oldpwd>** is "12345678".
2. If the module is locked to a specific SIM card through **+CLCK** and password lost or SIM state is PH-SIM PUK, you can use the super password to unlock it.

5.7. AT+QCCID Show CCID

AT+QCCID Show CCID	
Test Command **AT+QCCID=?**	Response **OK**
Execution Command **AT+QCCID**	Response **ccid data**

Quectel Confidential

	OK
Maximum Response Time	300ms
Reference	

Example

AT+QCCID **898600220909A0206023** **OK**	//Query CCID of the SIM card

5.8. AT+QGID Get SIM Card Group Identifier

AT+QGID Get SIM Card Group Identifier	
Execution Command **AT+QGID**	Response **+QGID: <gid1> <gid2>** **OK** **ERROR**
Maximum Response Time	300ms
Reference	

Parameter

<gid1>	Integer type of SIM card group identifier 1
<gid2>	Integer type of SIM card group identifier 2

NOTE

If the SIM supports GID files, the GID values are retuned. Otherwise **0xff** is retuned.

Quectel Confidential

5.9. AT+QSIMVOL Select SIM Card Operating Voltage

AT+QSIMVOL Select SIM Card Operating Voltage	
Test Command **AT+QSIMVOL=?**	Response **+QSIMVOL:** (list of supported **<mode>**s) **OK**
Read Command **AT+QSIMVOL?**	Response **+QSIMVOL: <mode>** **OK**
Write Command **AT+QSIMVOL=<mode>**	Response **OK** **ERROR** **+CME ERROR: <err>**
Maximum Response Time	300ms
Reference	

Parameter

<mode>	0	Recognize 1.8V and 3.0V SIM card (Default)
	1	Recognize 1.8V SIM card only
	2	Recognize 3.0V SIM card only

NOTE

AT+QSIMVOL can take effect only when the command is set successfully and the module is restarted.

5.10. AT+QSPN Get Service Provider Name from SIM

AT+QSPN Get Service Provider Name from SIM	
Read Command **AT+QSPN?**	Response **+QSPN:** (**<spn>**s), (list of supported **<display mode>**s) **OK** **+CME ERROR: <err>**
Maximum Response Time	300ms

Quectel Confidential

Reference	

Parameter

<spn>	String type; service provider name on SIM	
<display mode>	0	Do not display PLMN. Already registered on PLMN
	1	Display PLMN

NOTE

CME errors are possible if SIM is not inserted or PIN is not entered.

5.11. AT+QTRPIN Times Remain to Input SIM PIN/PUK

AT+QTRPIN Times Remain to Input SIM PIN/PUK	
Execution Command **AT+QTRPIN**	Response Times remain to input SIM PIN. **+QTRPIN: <chv1>,<chv2>,<puk1>,<puk2>** **OK**
Maximum Response Time	300ms
Reference	

Parameter

<chv1>	Times remain to input chv1
<chv2>	Times remain to input chv2
<puk1>	Times remain to input puk1
<puk2>	Times remain to input puk2

Quectel Confidential

6 Network Service Commands

6.1. AT+COPS Operator Selection

AT+COPS Operator Selection	
Test Command **AT+COPS=?**	Response TA returns a list of quadruplets, each representing an operator present in the network. Any of the formats may be unavailable and should then be an empty field. The list of operators shall be in order: home network, networks referenced in SIM and other networks. **+COPS:** (list of supported**<stat>**, long alphanumeric **<oper>**, short alphanumeric **<oper>**, numeric **<oper>**s)[,,(list of supported **<mode>**s),(list of supported **<format>**s)] **OK** If error is related to ME functionality: **+CME ERROR: <err>**
Read Command **AT+COPS?**	Response TA returns the current mode and the currently selected operator. If no operator is selected, **<format>** and **<oper>** are omitted. **+COPS: <mode>[,<format>[,<oper>]]** **OK** If error is related to ME functionality: **+CME ERROR: <err>**
Write Command **AT+COPS=<mode>[,<format>[,<oper>]]**	Response TA forces an attempt to select and register the GSM network operator. If the selected operator is not available, no other operator shall be selected (except **<mode>**=4). The format of selected operator name shall apply to further read commands (**+COPS?**).

Quectel Confidential

	OK If error is related to ME functionality: **+CME ERROR: <err>**
Maximum Response Time	75s, determined by network.
Reference GSM 07.07	

Parameter

<stat>	0	Unknown
	1	Operator available
	2	Operator current
	3	Operator forbidden
<oper>	Operator in format as per **<mode>**	
<mode>	0	Automatic mode; **<oper>** field is ignored
	1	Manual operator selection; **<oper>** field shall be present
	2	Manual deregister from network
	3	Set only **<format>** (for read Command **+COPS?**) – not shown in Read Command response
	4	Manual/automatic selected; if manual selection fails, automatic mode (**<mode>**=0) is entered
<format>	0	Long format alphanumeric **<oper>**;can be up to 16 characters long
	1	Short format alphanumeric **<oper>**
	2	Numeric **<oper>**; GSM Location Area Identification number

Example

```
AT+COPS=?                                   //List all current network operators
+COPS: (2,"CHINA MOBILE","CMCC","46000"),(3,"CHINA UNICOM GSM","UNICOM","46001")
,,(0-4),(0-2)

OK
AT+COPS?                                    //Query the currently selected network operator
+COPS: 0,0,"CHINA MOBILE"

OK
```

Quectel Confidential

6.2. AT+CREG Network Registration

AT+CREG Network Registration	
Test Command **AT+CREG=?**	Response **+CREG:** (list of supported **<n>**s) **OK**
Read Command **AT+CREG?**	Response TA returns the status of result code presentation and an integer **<stat>** which shows whether the network has currently indicated the registration of the ME. Location information elements **<lac>** and **<ci>** are returned only when **<n>**=2 and ME is registered in the network. **+CREG: <n>,<stat>[,<lac>,<ci>]** **OK** If error is related to ME functionality: **+CME ERROR: <err>**
Write Command **AT+CREG=<n>**	Response TA controls the presentation of an unsolicited result code **+CREG: <stat>** when **<n>**=1 and there is a change in the ME network registration status. **OK**
Maximum Response Time	300ms
Reference GSM 07.07	

Parameter

<n>	0	Disable network registration unsolicited result code
	1	Enable network registration unsolicited result code **+CREG: <stat>**
	2	Enable network registration unsolicited result code with location information
<stat>	0	Not registered, ME is not currently searching a new operator to register to
	1	Registered, home network
	2	Not registered, but ME is currently searching a new operator to register to
	3	Registration denied
	4	Unknown
	5	Registered, roaming
<lac>	String type; two byte location area code in hexadecimal format	
<ci>	String type; two byte cell ID in hexadecimal format	

Quectel Confidential

NOTE

Unsolicited result code
If **<n>**=1 and there is a change in the ME network registration status **+CREG: <stat>**
If **<n>**=2 and there is a change in the ME network registration status or a change of the network cell: **+CREG: <stat>[,<lac>,<ci>]**

Example

```
AT+CREG=1
OK

+CREG: 1                          //URC reports that operator has been found
AT+CREG=2                         //Activates extended URC mode
OK

+CREG: 1,"1878","0873"            //URC reports that operator has been found with location
                                    area code and cell ID
```

6.3. AT+CSQ Signal Quality Report

AT+CSQ Signal Quality Report	
Test Command **AT+CSQ=?**	Response **+CSQ:** (list of supported **<rssi>**s),(list of supported **<ber>**s) **OK**
Execution Command **AT+CSQ**	Response **+CSQ: <rssi>,<ber>** **OK** **+CME ERROR: <err>** Execution Command returns received signal strength indication **<rssi>** and channel bit error rate **<ber>** from the ME. Test Command returns values supported by the TA.
Maximum Response Time	300ms
Reference GSM 07.07	

Quectel Confidential

Parameter

<rssi>	0	-113 dBm or less
	1	-111 dBm
	2...30	-109... -53 dBm
	31	-51 dBm or greater
	99	Not known or not detectable
<ber>	(in percent):	
	0...7	As RXQUAL values in the table in GSM 05.08 subclause 8.2.4
	99	Not known or not detectable

Example

```
AT+CSQ=?
+CSQ: (0-31,99),(0-7,99)

OK
AT+CSQ
+CSQ: 28,0                    //Query the current signal strength indication is 28 and
                                the bit error rate is 0

OK
```

6.4. AT+CPOL Preferred Operator List

AT+CPOL Preferred Operator List	
Test Command **AT+CPOL=?**	Response **+CPOL:** (list of supported **<index>**s),(list of supported **<format>**s) **OK**
Read Command **AT+CPOL?**	Response **+CPOL: <index1>,<format>,<oper1>** **[<CR><LF>+CPOL: <index2>,<format>,<oper2>** **[…]]** **OK** **+CME ERROR: <err>**
Write Command **AT+CPOL=<index>[,<format>[,<oper>]]**	Response **OK**

Quectel Confidential

	If error is related to ME functionality: **+CME ERROR: <err>**
Maximum Response Time	300ms
Reference GSM 07.07	

Parameter

<index>	I	Integer type: order number of operator in SIM preferred operator list
<format>	0	Long format alphanumeric **<oper>**
	1	Short format alphanumeric **<oper>**
	2	Numeric **<oper>**
<oper>	String type: <format> indicates either alphanumeric or numeric format is used (see **+COPS** command)	

NOTE

There is SIM card not allowed to edit the list of the preferred operators.

6.5. AT+COPN Read Operator Names

AT+COPN Read Operator Names	
Test Command **AT+COPN=?**	Response **OK**
Execution Command **AT+COPN**	Response **+COPN: <numeric1>,<alpha1 >** **[<CR><LF>+COPN: <numeric2>,<alpha2>** **[…]]** **OK** **+CME ERROR: <err>**
Maximum Response Time	300ms
Reference GSM 07.07	

Quectel Confidential

Parameter

<numericn>	String type: operator in numeric format (see **+COPS**)
<alphan>	String type: operator in long alphanumeric format (see **+COPS**)

6.6. AT+QBAND Get and Set Mobile Operation Band

AT+QBAND Get and Set Mobile Operation Band	
Test Command **AT+QBAND=?**	Response **+QBAND:** (list of supported **<op_band>**s) **OK**
Read Command **AT+QBAND?**	Response **+QBAND: <op_band>** **OK**
Write Command **AT+QBAND=<op_band>**	Response **OK** If error is related to ME functionality: **+CME ERROR: <err>**
Maximum Response Time	30s, determined by network.
Reference	

Parameter

<op_band>	"EGSM_MODE" "DCS_MODE" "PCS_MODE" "GSM850_MODE" "EGSM_DCS_MODE" "GSM850_PCS_MODE" "GSM850_EGSM_DCS_PCS_MODE"

NOTE

The following radio setting to be updated is stored in non-volatile memory.

Quectel Confidential

6.7. AT+QENG Switch on or off Engineering Mode

AT+QENG Switch on or off Engineering Mode	
Test Command **AT+QENG=?**	Response **+QENG:** (list of supported **<mode>**s),(list of supported **<dump>**s) **OK**
Read Command **AT+QENG?**	Response The corresponding information is reported selectively according to **<dump>**. **+QENG: <mode>,<dump>** URCs of the serving cell information: **+QENG: 0,<mcc>,<mnc>,<lac>,<cellid>,<bcch>,<bsic>,<dbm>,<c1>,<c2>,<txp>,<rla>,<tch>,<ts>,<maio>,<hsn><ta>,<rxq_sub>,<rxq_full>** URCs of 1-6 the neighboring cell information: **[+QENG:1,list of (<ncell>,<bcch>,<dbm>,<bsic>,<c1>, <c2>,<mcc>, <mnc>,<lac>,<cellid>)…]** URCs of cell frequency list(CA) of the serving cell: **[+QENG: 2,list of (<arfcn>)…]** BA measured result list: **[+QENG: 4,record number of the list, list of (<bcch>,<dbm>,<bsic>)]** **OK**
Write Command **AT+QENG=<mode>[,< dump>]**	Response **OK** **ERROR** **+CME ERROR: <err>**
Maximum Response Time	300ms
Reference	

Quectel Confidential

Parameter

<mode>	0	Switch off engineering mode
	1	Switch on engineering mode
	2	Switch on engineering mode, and activate the URC report of network information
<dump>	0	Only display the serving cell information
	1	Display the serving cell information, 1-6 neighboring cells information
	2	Display the serving cell information and list of serving cell carrier list
	3	Display the serving cell information,1-6 neighboring cell information and list of serving cell carrier list
	4	Display the serving cell information,1-6 neighboring cell information, list of serving cell carrier list and BA measured resulte list.
<mcc>	Mobile country code	
<mnc>	Mobile network code	
<lac>	Location area code in hex format	
<cellid>	Cell ID in hex format	
<bcch>	Absolute Radio Frequency Channel Number of Broadcast Control Channel BCCH	
<bsic>	Base station identity code	
<dbm>	Receive signal level in dBm unit	
<c1>	C1 value	
<c2>	C2 value	
<txp>	Maximum TX power level when accessing on a CCH	
<rla>	Minimum receiving level permitted to access the system	
<ts>	TimeSlots	
<maio>	MAIO value	
<hsn>	HSN value	
<tch>	ARFCN of TCH, ‘h’ figure hopping	
<ta>	Timing Advance,range 0~63	
<rxq_sub>	RX quality(sub), range 0-7	
<rxq_full>	RX quality(full), range 0-7	
<ncell>	Number of neighboring six cell ID 1~6	
<arfcn>	Absolute radio frequency channel number	

NOTES

The following radio setting to be updated is stored in non-volatile memory.

1. When mode is 2, auto URCs are reported per 5 seconds.
2. The **<lac>** and **<cellid>** parameters in hex format, the parameter is in decimal.
3. If the cell information is not detected, the parameter is replaced by ‘x’ char.
4. If the detecting is not expert mode, the **<tch>**, **<ts>**, **<maio>**, **<hsn>**, **<ta>**, **<rxq_sub>** and **<rxq_full>** parameter do not display the value of the parameter and replaced by ‘x’ char.
5. During the network connecting, if the hopping frequency is supported by the network, so the channel of TCH is instable. Using the ’h’ figure **<tch>** under this mode.
6. Under expert mode, when the **<c1>** and **<c2>** of the serving cell cannot be updated. Using the ‘-1’

Quectel Confidential

figure to display the illegal value. At the same time，the **<txp>** and **<rla>** parameter cannot be updated in a certain condition, all the same holding the value of idle mode. This is because ME cannot be updated in this mode, ME cannot update the selection of cell and reselection of the parameter. When the connecting is over, mobile device goes back idle mode and gives out the correct value.

7. If TA can report the information of the neighboring cell, the URCs of six neighboring cell should be reported. If some cells cannot be measured, the 'x' char will be filled in the parameter of these cells.
8. Under the special mode, the **<c1>** and **<c2>** parameters of the neighboring cell may be measured, then will report an unmeaning value. When the **<mcc>**, **<mnc>** ,**<lac>** and **<cellid>** parameter of the neighboring cell cannot be measured, the 'x' char will be filled in these parameters of all the six cells.
9. The command does not report the RX level and the RX quality. The "**AT+CSQ**" command can be used to query the values of RX level and RX quality.
10. The "**AT+QSPCH**" command can be used to re-query the type of the voice channel duration calling (FR, HR, EFR, AMR_FR, AMR_HR).
11. The BA measured list max record numbers are 32. If any of the BCCH cannot get the BSIC value, the BSIC will show 'x' instead. The measured list is only including the measured BCCH in the BA list, not the whole BA list.

Example

Idle mode:

```
AT+QENG=2
OK

+QENG: 0,460,00,1806,2602,64,46,-72,119,119,5,8,x,x,x,x,x,x,x

Dedicated mode:
AT+QENG=2,3
OK

+QENG: 0,460,00,1806,2031,17,41,-73,-1,-1,5,8,h,7,0,24,1,0,1

+QENG:
1,1,17,-74,41,111,95,460,00,1806,2031,2,2,-74,45,110,94,460,00,1878,151,3,22,-77,40,100,84,460,00,1806,2012,4,24,-77,45,97,81,460,00,1806,2013,5,25,-81,40,83,67,460,00,1806,2032,6,532,-92,48,-1,-1,x,x,x,x
```

Quectel Confidential

6.8. AT+QSCANF Scan Power of GSM Frequency

AT+QSCANF Scan Power of GSM Frequency	
Test Command **AT+QSCANF=?**	Response **+QSCANF:** (list of supported **<band>**s),(list of supported **<freq>**s) **OK**
Write Command **AT+QSCANF=<band>,<freq>**	Response If **<freq>=9999** and command is successful: **+QSCANF:** **1, CH113, -63.5** **2, CH80, -64.2** **4, CH22, -64.5** **…..** **20, CH116, -74.2** **OK** If **<freq>** is fixed frequency and command is successful: **+QSCANF:** **CH<freq>, <dbm>** If error is related to ME functionality: **+CME ERROR: <err>**
Maximum Response Time	300ms
Reference	

Parameter

<band>	0	BAND 900
	1	BAND 1800
	2	BAND 1900
	3	BAND 850
<freq>	9999	Scan all frequency in specified band
	0-1023	Scan a fixed frequency in specified band
<dbm>	The signal strength indication in dbm value for a specified frequency	

NOTE

Before using this AT command, RF function of system MUST be disabled. Please make sure CFUN state is 0 or 4. About how to change CFUN state, please refer to AT command **AT+CFUN**.

Quectel Confidential

6.9. AT+QLOCKF Lock GSM Frequency

AT+QLOCKF Lock GSM Frequency	
Test Command **AT+QLOCKF=?**	Response **+QLOCKF:** (list of supported **<mode>**s),(list of supported **<band1900>**s), (list of supported **<arfcn>**s) **OK**
Read Command **AT+QLOCKF?**	Response **+QLOCKF: <status>** **OK**
Write Command **AT+QLOCKF=<mode>,<band1900>,<arfcn1>[,<arfcn2>[,<arfcn3>]]**	Response **OK** **ERROR** **+CME ERROR: <err>**
Maximum Response Time	300ms
Reference	

Parameter

<mode>	0	Disable lock frequency
	1	Enable lock frequency
	2	Enable lock frequency and auto switch to saved frequency after powered on
<band1900>	0	Not a cell ID of 1900 band
	1	Cell ID of 1900 band
	2	Auto distinguish whether is a cell ID of 1900 band
<arfcn>	0-1024	ARFCN information
<status>	0	ME has not locked a certain ARFCN
	1	ME has locked a certain ARFCN

Quectel Confidential

7 Call Related Commands

7.1. ATA Answer an Incoming Call

ATA Answer an Incoming Call	
Execution Command **ATA**	Response TA sends off-hook to the remote station. Response in case of voice call, if successfully connected: **OK** Response if no connection: **NO CARRIER**
Maximum Response Time	1s, determined by network.
Reference V.25ter	

NOTES

1. Any additional commands on the same command line are ignored.
2. This command may be aborted generally by receiving a character during execution. The aborting is not possible during some states of connection establishment such as handshaking.
3. See also **ATX**.

Example

```
RING                                    //A voice call is ringing
AT+CLCC
+CLCC: 1,1,4,0,0,"02154450290",129,""

OK
ATA                                     //Accept the voice call with ATA
OK
```

Quectel Confidential

7.2. ATD Mobile Originated Call to Dial a Number

ATD Mobile Originated Call to Dial a Number	
Execution Command **ATD<n>[<mgsm>][;]**	Response This command can be used to set up outgoing voice, data or FAX calls. It also serves to control supplementary services. If no dial tone and (parameter setting **ATX2** or **ATX4**): **NO DIALTONE** If busy and (parameter setting **ATX3** or **ATX4**): **BUSY** If a connection cannot be established: **NO CARRIER** If connection is successful and voice call: **OK**
Maximum Response Time	1s, determined by network.
Reference V.25ter	

Parameter

<n> String of dialing digits and optionally V.25ter modifiers
dialingdigits:**0-9, * , #, +, A, B, C**
Following V.25ter modifiers are ignored:
,(comma), T, P, !, W, @

Emergency call:

<n> Standardized emergency number 112(no SIM needed)

<mgsm> String of **GSM** modifiers:

- **I** Actives **CLIR** (Disables presentation of own number to called party)
- **i** Deactivates **CLIR** (Enable presentation of own number to called party)
- **G** Activates closed user group invocation for this call only
- **g** Deactivates closed user group invocation for this call only

<;> Only required to set up voice call, return to command state

Quectel Confidential

NOTES

1. This command may be aborted generally by receiving an **ATH** command or a character during execution. The aborting is not possible during some states of connection establishment such as handshaking.
2. Parameter "I" and "i" only if no *# code is within the dial string.
3. **<n>** is default value for last number that can be dialed by **ATDL**.
4. *# codes sent with **ATD** are treated as voice calls. Therefore, the command must be terminated with a semicolon ";".
5. See **ATX** command for setting result code and call monitoring parameters.
6. Responses returned after dialing with **ATD**
   - For voice call two different responses mode can be determined. TA returns “OK” immediately either after dialing was completed or after the call was established. The setting is controlled by **AT+COLP**. Factory default is **AT+COLP=0**, which causes the TA returns “OK” immediately after dialing was completed, otherwise TA will returns “OK”, “BUSY”, “NO DIAL TONE”, “NO CARRIER”.
7. Using **ATD** during an active voice call:
   - When a user originates a second voice call while there is already an active voice call, the first call will be automatically put on hold.
   - The current states of all calls can be easily checked at any time by using the **AT+CLCC** command.

Example

ATD10086; **OK**	//Dialing out the party’s number

7.3. ATH Disconnect Existing Connection

ATH Disconnect Existing Connection	
Execution Command **ATH[n]**	Response Disconnect existing call by local TE from command line and terminate call. **OK**
Maximum Response Time	90s, determined by network.
Reference V.25ter	

Quectel Confidential

Parameter

<n>	0	Disconnect from line and terminate call

NOTE

OK is issued after circuit 109 (DCD) is turned off, if it was previously on.

7.4. +++ Switch from Data Mode to Command Mode

+++ Switch from Data Mode to Command Mode	
Execution Command **+++**	Response This command is only available during TA is in data mode, such as, a GPRS connection and a transparent TCPIP connection. The "**+++**" character sequence causes the TA to cancel the data flow over the AT interface and switch to command mode. This allows you to enter AT command while maintaining the data connection with the remote server or, accordingly, the GPRS connection. **OK**
Maximum Response Time	300ms
Reference V.25ter	

NOTES

1. To prevent the "**+++**" escape sequence from being misinterpreted as data, it should comply to following sequence:
   - No characters entered for T1 time (0.5 seconds).
   - "**+++**" characters entered with no characters in between. For PPP online mode, the interval between two "**+**" MUST should be less than 1 second and for a transparent TCPIP connection, the interval MUST be less than 20ms.
   - No characters entered for T1 time (0.5 seconds).
   - Switch to command mode, otherwise go to step 1.
2. To return from command mode back to data or PPP online mode: Enter **ATO**
   - Another way to change to command mode is through DTR, see **AT&D** command for the details.

Quectel Confidential

7.5. ATO Switch from Command Mode to Data Mode

ATO Switch from Command Mode to Data Mode	
Execution Command **ATO[n]**	Response TA resumes the connection and switches back from command mode to data mode. If connection is not successfully resumed: **NO CARRIER** else TA returns to data mode from command mode **CONNECT <text>**
Maximum Response Time	300ms
Reference V.25ter	

Parameter

<n>	0	Switch from command mode to data mode

NOTE

TA returns to data mode from command mode **CONNECT <text>**,**<text>** only if parameter setting is X>0.

7.6. ATP Select Pulse Dialing

ATP Select Pulse Dialing	
Execution Command **ATP**	Response **OK**
Maximum Response Time	300ms
Reference V.25ter	

NOTE

No effect in GSM.

Quectel Confidential

7.7. ATS0 Set Number of Rings before Automatically Answering Call

ATS0 Set Number of Rings before Automatically Answering Call	
Read Command **ATS0?**	Response **<n>** **OK**
Write Command **ATS0=<n>**	Response This parameter setting determines the number of rings before auto-answer. **OK**
Maximum Response Time	300ms
Reference V.25ter	

Parameter

<n>	0	Automatic answering is disabled
	1-255	Enable automatic answering on the ring number specified

NOTE

If **<n>** is set too high, the calling party may hang up before the call can be answered automatically.

Example

```
ATS0=3                    //Set three rings before automatically answering a call
OK

RING                      //Call coming
RING
RING                      //Automatically answering the call after three rings
```

7.8. ATS6 Set Pause before Blind Dialing

ATS6 Set Pause before Blind Dialing	
Read Command **ATS6?**	Response **<n>**

Quectel Confidential

	OK
Write Command **ATS6=<n>**	Response **OK**
Maximum Response Time	300ms
Reference V.25ter	

Parameter

<n>	0-2-10	Number of seconds to wait before blind dialing

NOTE

No effect in GSM.

7.9. ATS7 Set Number of Seconds to Wait for Connection Completion

ATS7 Set Number of Seconds to Wait for Connection Completion	
Read Command **ATS7?**	Response **<n>** **OK**
Write Command **ATS7=<n>**	Response This parameter setting determines the amount of time to wait for the connection completion in case of answering or originating a call. **OK**
Maximum Response Time	300ms
Reference V.25ter	

Parameter

<n>	1-60-255	Number of seconds to wait for connection completion

Quectel Confidential

NOTES

1. If called party has specified a high value for **ATS0=<n>**, call setup may fail.
2. The correlation between **ATS7** and **ATS0** is important, for example: Call may fail if **ATS7=30** and **ATS0=20**.
3. **ATS7** is only applicable to data call.

7.10. ATS8 Set the Number of Seconds to Wait for Comma Dial Modifier

ATS8 Set the Number of Seconds to Wait for Comma Dial Modifier	
Read Command **ATS8?**	Response **<n>** **OK**
Write Command **ATS8=<n>**	Response **OK**
Maximum Response Time	300ms
Reference V.25ter	

Parameter

<n>	0	No pause when comma encountered in dial string
	1-2-255	Number of seconds to wait

NOTE

No effect in GSM.

7.11. ATS10 Set Disconnect Delay after Indicating the Absence of Data Carrier

ATS10 Set Disconnect Delay after Indicating the Absence of Data Carrier	
Read Command **ATS10?**	Response **<n>**

Quectel Confidential

	OK
Write Command **ATS10=<n>**	Response This parameter setting determines the amount of time that the TA will remain connected in absence of data carrier. If the data carrier is once more detected before disconnection, the TA remains connected. **OK**
Maximum Response Time	300ms
Reference V.25ter	

Parameter

<n>	1-15-254	Number of delay in 100ms

7.12. ATT Select Tone Dialing

ATT Select Tone Dialing	
Execution Command **ATT**	Response **OK**
Maximum Response Time	300ms
Reference V.25ter	

NOTE

No effect in GSM.

7.13. AT+CSTA Select Type of Address

AT+CSTA Select Type of Address	
Test Command **AT+CSTA=?**	Response **+CSTA:** (list of supported **<type>**s) **OK**

Quectel Confidential

Read Command **AT+CSTA?**	Response **+CSTA: <type>** **OK**
Maximum Response Time	300ms
Reference GSM 07.07	

Parameter

<type>	Current address type setting.	
	129	Unknown type (IDSN format number)
	145	International number type (ISDN format)
	161	National number type (IDSN format)

7.14. AT+CLCC List Current Calls of ME

AT+CLCC List Current Calls of ME	
Test Command **AT+CLCC=?**	Response **OK**
Execution Command **AT+CLCC**	Response TA returns a list of current calls of ME. If command succeeds but no calls are available, no information response is sent to TE. **[+CLCC: <id1>,<dir>,<stat>,<mode>,<mpty>[,<number>,<type>[,""]]** **[<CR><LF>+CLCC: <id2>,<dir>,<stat>,<mode>,<mpty>[,<number>,<type>[,""]]** **[...]]]** **OK** If error is related to ME functionality: **+CME ERROR: <err>**
Maximum Response Time	300ms
Reference GSM 07.07	

Quectel Confidential

Parameter

<idx>	Integer type; call identification number as described in GSM 02.30 sub clause 4.5.5.1; this number can be used in **+CHLD** Command operations	
<dir>	0	Mobile originated (MO) call
	1	Mobile terminated (MT) call
<stat>	State of the call	
	0	Active
	1	Held
	2	Dialing (MO call)
	3	Alerting (MO call)
	4	Incoming (MT call)
	5	Waiting (MT call)
<mode>	Bearer/tele service	
	0	Voice
	1	Data
	2	FAX
	9	Unknown
<mpty>	0	Call is not one of multiparty (conference) call parties
	1	Call is one of multiparty (conference) call parties
<number>	Phone number in string type in format specified by **<type>**	
<type>	Type of address of octet in integer format	
	129	Unknown type(IDSN format number)
	145	International number type (ISDN format)

Example

```
AT+CLCC
+CLCC: 1,0,0,0,0,"10086",129,""          //List the current call of ME

OK
```

7.15. AT+CR Service Reporting Control

AT+CR Service Reporting Control	
Test Command **AT+CR=?**	Response **+CR:** (list of supported **<mode>**s) **OK**
Read Command **AT+CR?**	Response **+CR: <mode>**

Quectel Confidential

	OK
Write Command **AT+CR=[<mode>]**	Response TA controls whether or not intermediate result code **+CR: <serv>** is returned from the TA to the TE when a call set up. **OK**
Maximum Response Time	300ms
Reference GSM 07.07	

Parameter

<mode>	0	Disable
	1	Enable
<serv>	ASYNC	Asynchronous transparent
	SYNC	Synchronous transparent
	REL ASYNC	Asynchronous non-transparent
	REL SYNC	Synchronous non-transparent

NOTE

Intermediate result code:
If it is enabled, an intermediate result code is transmitted at the point during connect negotiation at which the TA has determined which speed and quality of service will be used, before any error control or data compression reports are transmitted, and before any final result code (e.g. **CONNECT**) is transmitted.

7.16. AT+CRC Set Cellular Result Codes for Incoming Call Indication

AT+CRC Set Cellular Result Codes for Incoming Call Indication	
Test Command **AT+CRC=?**	Response **+CRC:** (list of supported **<mode>**s) **OK**
Read Command **AT+CRC?**	Response **+CRC: <mode>** **OK**
Write Command **AT+CRC=[<mode>]**	Response TA controls whether or not the extended format of incoming call indication is used.

Quectel Confidential

	OK
Maximum Response Time	300ms
Reference GSM 07.07	

Parameter

<mode>	0	Disable extended format
	1	Enable extended format

NOTE

Unsolicited result code:
When it is enabled, an incoming call is indicated to the TE with unsolicited result code **+CRING: <type>** instead of the normal RING.
Parameter

<type>	ASYNC	Asynchronous transparent
	SYNC	Synchronous transparent
	REL ASYNC	Asynchronous non-transparent
	REL SYNC	Synchronous non-transparent
	FAX	Facsimile
	VOICE	Voice

Example

```
AT+CRC=1                    //Enable extended format
OK

+CRING: VOICE               //Indicate incoming call to the TE
ATH
OK
AT+CRC=0                    //Disable extended format
OK

RING                        //Indicate incoming call to the TE
ATH
OK
```

Quectel Confidential

7.17. AT+CRLP Select Radio Link Protocol Parameter

AT+CRLP Select Radio Link Protocol Parameter	
Test Command **AT+CRLP=?**	Response TA returns values supported. RLP (Radio Link Protocol) versions 0 and 1 share the same parameter set. TA returns only one line for this set (where **<verx>** is not present). **+CRLP:** (list of supported **<iws>**s),(list of supported **<mws>**s),(list of supported **<T1>**s),(list of supported **<N2>**s),(list of supported **<ver1>**s),(list of supported **<T4>**s) **OK**
Read Command **AT+CRLP?**	Response TA returns current settings for RLP version. RLP versions 0 and 1 share the same parameter set. TA returns only one line for this set (where **<verx>** is not present). **+CRLP: <iws>,<mws>,<T1>,<N2>,<ver1>,<T4>** **OK**
Write Command **AT+CRLP=[<iws>[,<mws>[,<T1>[,<N2>[,<ver>[,<T4>]]]]]]**	Response TA sets radio link protocol (RLP) parameters used when non-transparent data calls are set up. **OK**
Maximum Response Time	300ms
Reference GSM 07.07	

Parameter

<iws>	0-61	Interworking window size (IWF to MS)
<mws>	0-61	Mobile window size (MS to IWF)
<T1>	39-255	Acknowledgment timer T1 in a unit of 10ms
<N2>	1-255	Retransmission attempts N2
<verx>	RLP	RLP version number in integer format. When version indication is not present, it shall equal 0.
<T4>	3-255	Re-sequencing period in integer format, in a unit of 10ms

Quectel Confidential

7.18. AT+CSNS Single Numbering Scheme

AT+CSNS Single Numbering Scheme	
Test Command **AT+CSNS=?**	Response **+CSNS:** (list of supported **<mode>**s) **OK**
Read Command **AT+CSNS?**	Response **+CSNS: <mode>** **OK**
Write Command **AT+CSNS=[<mode>]**	Response **OK** **ERROR**
Maximum Response Time	300ms
Reference GSM 07.07	

Parameter

<mode>	0	Voice
	1	Alternating voice/FAX, voice first
	2	FAX
	3	Alternating voice/data, voice first
	4	Data
	5	Alternating voice/FAX, FAX first
	6	Alternating voice/data, data first
	7	Voice followed by data

7.19. AT+CMOD Configure Alternating Mode Calls

AT+CMOD Configure Alternating Mode Calls	
Test Command **AT+CMOD=?**	Response **+CMOD:** (list of supported **<mode>**s) **OK**
Write Command **AT+CMOD=[<mode>]**	Response **OK** **ERROR**

Quectel Confidential

Maximum Response Time	300ms
Reference GSM 07.07	

Parameter

<mode>	0	Single mode
	1	Alternating voice/FAX
	2	Alternating voice/data
	3	Voice followed by data

7.20. AT+QSFR Preference Speech Coding

AT+QSFR Preference Speech Coding	
Test Command **AT+QSFR=?**	Response **+QSFR:** (list of supported **<mode>**s) **OK**
Read Command **AT+QSFR?**	Response **+QSFR: <mode>** **OK**
Write Command **AT+QSFR=<mode>**	Response **OK** **ERROR**
Maximum Response Time	300ms
Reference	

Parameter

<mode>	0	Automatic mode
	1	FR
	2	HR
	3	EFR
	4	AMR_FR
	5	AMR_HR
	6	FR and EFR, FR priority
	7	EFR and FR, EFR priority
	8	EFR and HR, EFR priority

Quectel Confidential

9	EFR and AMR_FR, EFR priority
10	AMR_FR and FR, AMR_FR priority
11	AMR_FR and HR, AMR_FR priority
12	AMR_FR and EFR, AMR_FR priority
13	AMR_HR and FR, AMR_HR priority
14	AMR_HR and HR, AMR_HR priority
15	AMR_HR and EFR, AMR_HR priority

NOTE

This setting is stored in the non-volatile memory and will be used whenever the module is powered up again.

7.21. AT+QSPCH Speech Channel Type Report

AT+QSPCH Speech Channel Type Report	
Test Command **AT+QSPCH=?**	Response **+QSPCH:** (list of supported **<mode>**s) **OK**
Read Command **AT+QSPCH?**	Response **+QSPCH: <mode>,<speech channel>** **OK**
Write Command **AT+QSPCH=<mode>**	Response **OK** **ERROR**
Maximum Response Time	300ms
Reference	

Parameter

<mode>	0	Disable report speech channel type
	1	Enable report speech channel type
<speech channel>	Speech channel type	
	0	NO SPEECH TCH
	1	FR
	2	HR
	3	EFR

Quectel Confidential

	4	AMR_FR
	5	AMR_HR

NOTE

URC **+QSPCH: <mode>,<speech channel>** will be indicated when speech channel type changes.

7.22. AT+QDISH Disable ATH

AT+QDISH Disable ATH	
Test Command **AT+QDISH=?**	Response **+QDISH:** (list of supported **<disableath>**s) **OK**
Read Command **AT+QDISH?**	Response **+QDISH: <disableath>** **OK**
Write Command **AT+QDISH=<disableath>**	Response **OK** If error is related to ME functionality: **+CME ERROR: <err>**
Maximum Response Time	300ms
Reference	

Parameter

<disableath>	Disable ATH	
	0	Enable ATH command
	1	Disable ATH command

Quectel Confidential

8 SMS Commands

8.1. AT+CSMS Select Message Service

AT+CSMS Select Message Service	
Test Command **AT+CSMS=?**	Response **+CSMS:** (list of supported **<service>**s) **OK**
Read Command **AT+CSMS?**	Response **+CSMS: <service>,<mt>,<mo>,<bm>** **OK**
Write Command **AT+CSMS=<service>**	Response **+CSMS: <mt>,<mo>,<bm>** **OK** If error is related to ME functionality: **+CMS ERROR: <err>**
Maximum Response Time	300ms
Reference GSM 07.05	

Parameter

<service>	0	GSM 03.40 and 03.41 (the syntax of SMS AT commands is compatible with GSM 07.05 Phase 2 version 4.7.0; Phase 2+ features which do not require new command syntax may be supported (e.g. correct routing of messages with new Phase 2+ data coding schemes))
	128	SMS PDU mode - TPDU only used for ending/receiving SMSs
<mt>	Mobile Terminated Messages	
	0	Type not supported
	1	Type supported
<mo>	Mobile Originated Messages	

Quectel Confidential

	0	Type not supported
	1	Type supported
<bm>	Broadcast Type Messages	
	0	Type not supported
	1	Type supported

8.2. AT+CMGF Select SMS Message Format

AT+CMGF Select SMS Message Format	
Test Command **AT+CMGF=?**	Response **+CMGF:** (list of supported **<mode>**s) **OK**
Read Command **AT+CMGF?**	Response **+CMGF: <mode>** **OK**
Write Command **AT+CMGF=[<mode>]**	Response TA sets parameter to denote which kind of I/O format of messages is used. **OK**
Maximum Response Time	300ms
Reference GSM 07.05	

Parameter

<mode>	0	PDU mode
	1	Text mode

8.3. AT+CSCA SMS Service Center Address

AT+CSCA SMS Service Center Address	
Test Command **AT+CSCA=?**	Response **OK**
Read Command **AT+CSCA?**	Response **+CSCA: <sca>,<tosca>**

Quectel Confidential

	OK
Write Command **AT+CSCA=<sca>[,<tosca>]**	Response TA updates the SMSC address, through which mobile originated SMS are transmitted. In text mode, setting is used by sending and writing commands. In PDU mode, setting is used by the same commands, but only when the length of the SMSC address coded into **<pdu>** parameter equals zero. **OK** If error is related to ME functionality: **+CME ERROR: <err>**
Maximum Response Time	300ms
Reference GSM 07.05	

Parameter

<sca>	GSM 04.11 RP SC address Address-Value field in string format; BCD numbers (or GSM default alphabet characters) are converted to characters of the currently selected TE character set (specified by **+CSCS** in TS 07.07); type of address given by **<tosca>**
<tosca>	Service center address format GSM 04.11 RP SC address Type-of-Address octet in integer format (default refer to **<toda>**)

NOTE

The Command writes the parameters in NON-VOLATILE memory.

Example

```
AT+CSCA="+8613800210500",145          //SMS service center address
OK
AT+CSCA?                              //Query SMS service center address
+CSCA: "+8613800210500",145

OK
```

Quectel Confidential

8.4. AT+CPMS Preferred SMS Message Storage

AT+CPMS Preferred SMS Message Storage	
Test Command **AT+CPMS=?**	Response **+CPMS:** (list of supported **<mem1>**s),(list of supported **<mem2>**s),(list of supported **<mem3>**s) **OK**
Read Command **AT+CPMS?**	Response **+CPMS:** **<mem1>,<used1>,<total1>,<mem2>,<used2>,<total2>,<mem3>,<used3>,<total3>** **OK**
Write Command **AT+CPMS=<mem1>[,<mem2>[,<mem3>]]**	Response TA selects memory storages **<mem1>**, **<mem2>** and **<mem3>** to be used for reading, writing, etc. **+CPMS:** **<used1>,<total1>,<used2>,<total2>,<used3>,<total3>** **OK** If error is related to ME functionality: **+CMS ERROR: <err>**
Maximum Response Time	300ms
Reference GSM 07.05	

Parameter

<mem1>	Messages to be read and deleted from this memory storage "SM" SIM message storage "ME" Mobile Equipment message storage "MT" Sum of "SM" and "ME" storages
<mem2>	Messages will be written and sent to this memory storage "SM" SIM message storage "ME" Mobile Equipment message storage "MT" Sum of "SM" and "ME" storages
<mem3>	Received messages will be placed in this memory storage if routing to PC is not set ("**+CNMI**") "SM" SIM message storage "ME" Mobile Equipment message storage

Quectel Confidential

	"MT" Sum of "SM" and "ME" storages
<usedx>	Integer type; Number of messages currently in **<memx>**
<totalx>	Integer type; Number of messages storable in **<memx>**

NOTE

The message storages of SIM and ME offer maximum space for 60, the SIM message storage will be priority stored. The SIM storage offer maximum space for 50, the ME storage offer maximum space for 10.

Example

```
AT+CPMS="SM","SM","SM"                    //Set SMS message storage as "SM"
+CPMS: 0,50,0,50,0,50

OK
AT+CPMS?                                  //Query the current SMS message storage
+CPMS: "SM",0,50,"SM",0,50,"SM",0,50

OK
```

8.5. AT+CMGD Delete SMS Message

AT+CMGD Delete SMS Message	
Test Command **AT+CMGD=?**	Response **+CMGD:** (list of supported **<index>**s),(list of supported **<delflag>**s) **OK**
Write Command **AT+CMGD=<index>[,<delflag>]**	Response TA deletes message from preferred message storage **<mem1>** location **<index>**. **OK** **ERROR** If error is related to ME functionality: **+CMS ERROR:<err>**
Maximum Response Time	300ms. Note: Operation of <delflag> depends on the storage of deleted messages.
Reference	

Quectel Confidential

GSM 07.05	

Parameter

<index>	Integer type; value in the range of location numbers supported by the associated memory	
<delflag>	0	Delete message specified in **<index>**
	1	Delete all read messages from **<mem1>** storage, leaving unread messages and stored mobile originated messages (whether sent or not) untouched
	2	Delete all read messages from **<mem1>** storage and sent mobile originated messages, leaving unread messages and unsent mobile originated messages untouched
	3	Delete all read messages from **<mem1>** storage, sent and unsent mobile originated messages, leaving unread messages untouched
	4	Delete all messages from **<mem1>** storage

Example

```
AT+CMGD=1                    //Delete message specified in <index>=1
OK
AT+CMGD=1,4                  //Delete all messages from <mem1> storage
OK
```

8.6. AT+CMGL List SMS Messages from Preferred Store

AT+CMGL List SMS Messages from Preferred Store	
Test Command **AT+CMGL=?**	Response **+CMGL:** (list of supported **<stat>**s) **OK**
Write Command **AT+CMGL=<stat>[,<mode>]**	Response TA returns messages with status value **<stat>** from message storage **<mem1>** to the TE. If status of the message is 'received unread', status in the storage changes to 'received read'. 1) If text mode (**+CMGF=1**) and command successful: for SMS-SUBMITs and/or SMS-DELIVERs: **+CMGL:** **<index>,<stat>,<oa/da>,[<alpha>],[<scts>][,<tooa/toda>,<length>]<CR><LF><data>[<CR><LF>** **+CMGL:**

Quectel Confidential

	<index>,<stat>,<da/oa>,[<alpha>],[<scts>][,<tooa/toda>,<length>]<CR><LF><data>[...]] for SMS-STATUS-REPORTs: **+CMGL: <index>,<stat>,<fo>,<mr>,[<ra>],[<tora>],<scts>,<dt>,<st>[<CR><LF>** **+CMGL: <index>,<stat>,<fo>,<mr>,[<ra>],[<tora>],<scts>,<dt>,<st>[...]]** for SMS-COMMANDs: **+CMGL: <index>,<stat>,<fo>,<ct>[<CR><LF>** **+CMGL: <index>,<stat>,<fo>,<ct>[...]]** for CBM storage: **+CMGL:<index>,<stat>,<sn>,<mid>,<page>,<pages><CR><LF><data>[<CR><LF>** **+CMGL: <index>,<stat>,<sn>,<mid>,<page>,<pages><CR><LF><data>[...]]** **OK** 2) If PDU mode (**+CMGF=0**) and Command successful: **+CMGL:<index>,<stat>,[<alpha>],<length><CR><LF><pdu><CR><LF>** **+CMGL: <index>,<stat>,[alpha],<length><CR><LF><pdu>[...]]** **OK** 3) If error is related to ME functionality: **+CMS ERROR: <err>**
Maximum Response Time	300ms. Note: Operation of **<stat>** depends on the storage of listed messages.
Reference GSM 07.05	

Parameter

<stat>	1) If text mode	
	"REC UNREAD"	Received unread messages
	"REC READ"	Received read messages

Quectel Confidential

	"STO UNSENT"	Stored unsent messages
	"STO SENT"	Stored sent messages
	"ALL"	All messages
	2) If PDU mode	
	0	Received unread messages
	1	Received read messages
	2	Stored unsent messages
	3	Stored sent messages
	4	All messages
<mode>	0	Normal (default)
	1	Not change status of the specified SMS record

<alpha> String type alphanumeric representation of **<da>** or **<oa>** corresponding to the entry found in MT phonebook; implementation of this feature is manufacturer specific; used character set should be the one selected with command select TE character set **+CSCS** (see definition of this command in TS 07.07)

<da> GSM 03.40 TP-Destination-Address Address-Value field in string format; BCD numbers (or GSM default alphabet characters) are converted to characters of the currently selected TE character set (refer to command **+CSCS** in TS 07.07); type of address given by **<toda>**

<data> In the case of SMS: GSM 03.40 TP-User-Data in text mode responses; format

- if **<dcs>** indicates that GSM 03.38 default alphabet is used and **<fo>** indicates that GSM 03.40 TPUser-Data-Header-Indication is not set
- if TE character set other than "HEX" (refer to Command Select TE character set **+CSCS** in TS 07.07):ME/TA converts GSM alphabet into current TE character set according to rules of Annex A
- if TE character set is "HEX": ME/TA converts each 7-bit character of GSM alphabet into two IRA character long hexadecimal number (e.g. character P (GSM 23) is presented as 17 (IRA 49 and 55))
- if **<dcs>** indicates that 8-bit or UCS2 data coding scheme is used, or **<fo>** indicates that GSM 03.40 TP-User-Data-Header-Indication is set: ME/TA converts each 8-bit octet into two IRA character long hexadecimal number (e.g. octet with integer value 42 is presented to TE as two characters 2A (IRA 50 and 65))

In the case of CBS: GSM 03.41 CBM Content of Message in text mode responses; format:

- if **<dcs>** indicates that GSM 03.38 default alphabet is used
- if TE character set other than "HEX" (refer to Command **+CSCS** in GSM 07.07): ME/TA converts GSM alphabet into current TE character set according to rules of Annex A
- if TE character set is "HEX": ME/TA converts each 7-bit character of GSM alphabet into two IRA character long hexadecimal number
- if **<dcs>** indicates that 8-bit or UCS2 data coding scheme is used: ME/TA converts each 8-bit octet into two IRA character long hexadecimal number

<length> Integer type value indicating in the text mode (**+CMGF=1**) the length of the message body **<data>** (or **<cdata>**) in characters; or in PDU mode (**+CMGF=0**), the length of the actual TP data unit in octets (i.e. the RP layer SMSC address octets are not counted in the length)

<index> Integer type; value in the range of location numbers supported by the associated memory

<oa> GSM 03.40 TP-Originating-Address Address-Value field in string format; BCD numbers (or

Quectel Confidential

	GSM default alphabet characters) are converted to characters of the currently selected TE character set (refer to command **+CSCS** in TS 07.07); type of address given by **<tooa>**
<pdu>	In the case of SMS: GSM 04.11 SC address followed by GSM 03.40 TPDU in hexadecimal format: ME/TA converts each octet of TP data unit into two IRA character long hexadecimal number (e.g. octet with integer value 42 is presented to TE as two characters 2A (IRA 50 and 65)). In the case of CBS: GSM 03.41 TPDU in hexadecimal format
<scts>	GSM 03.40 TP-Service-Center-Time-Stamp in time-string format (refer to **<dt>**)
<toda>	GSM 04.11 TP-Destination-Address Type-of-Address octet in integer format (when first character of **<da>** is + (IRA 43) default value is 145, otherwise default value is 129)
<tooa>	GSM 04.11 TP-Originating-Address Type-of-Address octet in integer format (refer to **<toda>**)

NOTE

If parameter is omitted the command returns the list of SMS with “REC UNREAD” status.

Example

```
AT+CMGF=1                          //Set SMS message format as text mode
OK
AT+CMGL="ALL"                      //List all messages from message storage
+CMGL: 1,"STO UNSENT","",",
This is a test from Quectel

+CMGL: 2,"STO UNSENT","",",
This is a test from Quectel,once again.

OK
```

8.7. AT+CMGR Read SMS Message

AT+CMGR Read SMS Message	
Test Command **AT+CMGR=?**	Response **OK**
Write Command **AT+CMGR=<index>[,<mode>]**	Response TA returns SMS message with location value **<index>** from message storage **<mem1>** to the TE. If status of the message is 'received unread', status in the storage changes to 'received read'. 1) If text mode (**+CMGF=1**) and command is executed

	successfully: for SMS-DELIVER: **+CMGR:** **<stat>,<oa>,[<alpha>],<scts>[,<tooa>,<fo>,<pid>,<dcs>,<sca>,<tosca>,<length>]<CR><LF><data>** for SMS-SUBMIT: **+CMGR:** **<stat>,<da>,[<alpha>][,<toda>,<fo>,<pid>,<dcs>,[<vp>],<sca>,<tosca>,<length>]<CR><LF><data>** for SMS-STATUS-REPORTs: **+CMGR:** **<stat>,<fo>,<mr>,[<ra>],[<tora>],<scts>,<dt>,<st>** for SMS-COMMANDs: **+CMGR:** **<stat>,<fo>,<ct>[,<pid>,[<mn>],[<da>],[<toda>],<length><CR><LF><cdata>]** for CBM storage: **+CMGR:** **<stat>,<sn>,<mid>,<dcs>,<page>,<pages><CR><LF><data>** 2) If PDU mode (+CMGF=0) and command successful: **+CMGR: <stat>,[<alpha>],<length><CR><LF><pdu>** **OK** 3) If error is related to ME functionality: **+CMS ERROR: <err>**
Maximum Response Time	Depends on the length of message content.
Reference GSM 07.05	

Parameter

<index>	Integer type; value in the range of location numbers supported by the associated memory	
<mode>	0	Normal
	1	Not change the status of the specified SMS record
<alpha>	String type alphanumeric representation of **<da>** or **<oa>** corresponding to the entry found in MT phonebook; implementation of this feature is manufacturer specific	

Quectel Confidential

<da>	GSM 03.40 TP-Destination-Address Address-Value field in string format; BCD numbers (or GSM default alphabet characters) are converted to characters of the currently selected TE character set (specified by **+CSCS** in TS 07.07); type of address given by **<toda>**
<data>	In the case of SMS: GSM 03.40 TP-User-Data in text mode responses; format − if **<dcs>** indicates that GSM 03.38 default alphabet is used and **<fo>** indicates that GSM 03.40 TPUser-Data-Header-Indication is not set − if TE character set other than "HEX" (refer to command select TE character set **+CSCS** in TS 07.07):ME/TA converts GSM alphabet into current TE character set according to rules of Annex A − if TE character set is "HEX": ME/TA converts each 7-bit character of GSM alphabet into two IRA character long hexadecimal number (e.g. character P (GSM 23) is presented as 17 (IRA 49 and 55)) − if **<dcs>** indicates that 8-bit or UCS2 data coding scheme is used, or **<fo>** indicates that GSM 03.40 TP-User-Data-Header-Indication is set: ME/TA converts each 8-bit octet into two IRA character long hexadecimal number (e.g. octet with integer value 42 is presented to TE as two characters 2A (IRA 50 and 65)) In the case of CBS: GSM 03.41 CBM Content of Message in text mode responses; format − if **<dcs>** indicates that GSM 03.38 default alphabet is used − if TE character set other than "HEX" (refer to command **+CSCS** in GSM 07.07): ME/TA converts GSM alphabet into current TE character set according to rules of Annex A − if TE character set is "HEX": ME/TA converts each 7-bit character of GSM alphabet into two IRA character long hexadecimal number − if **<dcs>** indicates that 8-bit or UCS2 data coding scheme is used: ME/TA converts each 8-bit octet into two IRA character long hexadecimal number
<dcs>	Depending on the command or result code: GSM 03.38 SMS Data Coding Scheme (default value is 0), or Cell Broadcast Data Coding Scheme in integer format
<fo>	Depending on the command or result code: first octet of GSM 03.40 SMS-DELIVER, SMS-SUBMIT (default value is 17), SMS-STATUS-REPORT, or SMS-COMMAND (default value is 2) in integer format
<length>	Integer type value indicating in the text mode (**+CMGF=1**) the length of the message body **<data>** (or **<cdata>**) in characters; or in PDU mode (**+CMGF=0**), the length of the actual TP data unit in octets (i.e. the RP layer SMSC address octets are not counted in the length)
<mid>	GSM 03.41 CBM Message Identifier in integer format
<oa>	GSM 03.40 TP-Originating-Address Address-Value field in string format; BCD numbers (or GSM default alphabet characters) are converted characters of the currently selected TE character set (specified by **+CSCS** in TS 07.07); type of address given by **<tooa>**
<pdu>	In the case of SMS: GSM 04.11 SC address followed by GSM 03.40 TPDU in hexadecimal format: ME/TA converts each octet of TP data unit into two IRA character long hexadecimal number (e.g. octet with integer value 42 is presented to TE as two characters 2A (IRA 50 and 65)) In the case of CBS: GSM 03.41 TPDU in hexadecimal format
<pid>	GSM 03.40 TP-Protocol-Identifier in integer format (default value is 0)
<sca>	GSM 04.11 RP SC address Address-Value field in string format; BCD numbers (or GSM

Quectel Confidential

	default alphabet characters) are converted to characters of the currently selected TE character set (specified by **+CSCS** in TS 07.07); type of address given by **<tosca>**
<scts>	GSM 03.40 TP-Service-Centre-Time-Stamp in time-string format (refer to **<dt>**)
<stat>	PDU mode / text mode / Explanation 0 / "REC UNREAD" / Received unread messages 1 / "REC READ" / Received read messages 2 / "STO UNSENT" / Stored unsent messages 3 / "STO SENT" / Stored sent messages 4 / "ALL" / All messages
<toda>	GSM 04.11 TP-Destination-Address Type-of-Address octet in integer format (when first character of **<da>** is + (IRA 43) default value is 145, otherwise default is 129)
<tooa>	GSM 04.11 TP-Originating-Address Type-of-Address octet in integer format (default refer to **<toda>**)
<tosca>	GSM 04.11 RP SC address Type-of-Address octet in integer format (default refer to **<toda>**)
<vp>	Depending on SMS-SUBMIT **<fo>** setting: GSM 03.40 TP-Validity-Period either in integer format (default value is 167) or in time-string format (refer to **<dt>**)

Example

```
+CMTI: "SM",3                    //Indicates that new message has been received and saved
                                   to <index>=3 of "SM"
AT+CMGR=3                        //Read message
+CMGR: "REC UNREAD","+8615021012496","","2010/09/25 15:06:37+32",145,4,0,241,"+8
613800210500",145,27
This is a test from Quectel

OK
```

8.8. AT+CMGS Send SMS Message

AT+CMGS Send SMS Message	
Test Command **AT+CMGS=?**	Response **OK**
Write Command 1) If text mode (**+CMGF=1**): **AT+CMGS=<da>[,<toda>]**<CR> **text is entered** <ctrl-Z/ESC> ESC quits without sending 2) If PDU mode (**+CMGF=0**):	Response TA sends message from a TE to the network (SMS-SUBMIT). Message reference value **<mr>** is returned to the TE on successful message delivery. Optionally (when **+CSMS <service>** value is 1 and network supports) **<scts>** is returned. Values can be used to identify message upon unsolicited delivery status report result code. 1) If text mode (**+CMGF=1**) and sent successfully:

AT+CMGS=<length><CR> **PDU is given** <ctrl-Z/ESC>	**+CMGS: <mr>** **OK** 2) If PDU mode (**+CMGF=0**) and sent successfully: **+CMGS: <mr>** **OK** 3) If error is related to ME functionality: **+CMS ERROR: <err>**
Maximum Response Time	120s, determined by network.
Reference GSM 07.05	

Parameter

<da>	GSM 03.40 TP-Destination-Address Address-Value field in string format; BCD numbers (or GSM default alphabet characters) are converted to characters of the currently selected TE character set (specified by **+CSCS** in TS 07.07); type of address given by **<toda>**
<toda>	GSM 04.11 TP-Destination-Address Type-of-Address octet in integer format (when first character of **<da>** is + (IRA 43) default value is 145, otherwise default value is 129)
<length>	Integer type value indicating in the text mode (**+CMGF=1**) the length of the message body **<data>** (or **<cdata>**) in characters; or in PDU mode (**+CMGF=0**), the length of the actual TP data unit in octets (i.e. the RP layer SMSC address octets are not counted in the length)
<mr>	GSM 03.40 TP-Message-Reference in integer format

Example

```
AT+CMGF=1                          //Set SMS message format as text mode
OK
AT+CSCS="GSM"                      //Set character set as GSM which is used by the TE
OK
AT+CMGS="15021012496"
> This is a test from Quectel      //Enter in text, <CTRL+Z> send message,<ESC> quits
                                     without sending
+CMGS: 247

OK
```

Quectel Confidential

8.9. AT+CMGW Write SMS Message to Memory

AT+CMGW Write SMS Message to Memory	
Test Command **AT+CMGW=?**	Response **OK**
Write Command 1) If text mode (+CMGF=1): **AT+CMGW[=<oa/da>[,<tooa/toda>[,<stat>]]]** <CR> **text is entered** **<**ctrl-Z/ESC> <ESC> quits without sending 2) If PDU mode (+CMGF=0): **AT+CMGW=<length>[,<stat>]**<CR> **PDU is given** <ctrl-Z/ESC>	Response TA transmits SMS message (either SMS-DELIVER or SMS-SUBMIT) from TE to memory storage **<mem2>**. Memory location **<index>** of the stored message is returned. By default message status will be set to 'stored unsent', but parameter **<stat>** also allows other status values to be given. If writing is successful: **+CMGW: <index>** **OK** If error is related to ME functionality: **+CMS ERROR: <err>**
Maximum Response Time	300ms
Reference GSM 07.05	

Parameter

<oa>	GSM 03.40 TP-Originating-Address Address-Value field in string format; BCD numbers (or GSM default alphabet characters) are converted to characters of the currently selected TE character set (specified by **+CSCS** in TS 07.07);type of address given by **<tooa>**		
<da>	GSM 03.40 TP-Destination-Address Address-Value field in string format; BCD numbers (or GSM default alphabet characters) are converted to characters of the currently selected TE character set (specified by **+CSCS** in TS 07.07); type of address given by **<toda>**		
<tooa>	GSM 04.11 TP-Originating-Address Type-of-Address octet in integer format (default refer to **<toda>**)		
<toda>	GSM 04.11 TP-Destination-Address Type-of-Address octet in integer format (when first character of **<da>** is + (IRA 43) default value is 145, otherwise default value is 129) 129 Unknown type (IDSN format number) 145 International number type (ISDN format)		
<stat>	PDU mode	text mode	Explanation
	0	"REC UNREAD"	Received unread messages
	1	"REC READ"	Received read messages
	2	"STO UNSENT"	Stored unsent messages
	3	"STO SENT"	Stored sent messages

Quectel Confidential

	4	"ALL"	All messages
<length>	Integer type value indicating in the text mode (**+CMGF=1**) the length of the message body **<data>** (or **<cdata>**) in characters; or in PDU mode (**+CMGF=0**), the length of the actual TP data unit in octets (i.e. the RP layer SMSC address octets are not counted in the length)		
<pdu>	In the case of SMS: GSM 04.11 SC address followed by GSM 03.40 TPDU in hexadecimal format: ME/TA converts each octet of TP data unit into two IRA character long hexadecimal number (e.g. octet with integer value 42 is presented to TE as two characters 2A (IRA 50 and 65)) In the case of CBS: GSM 03.41 TPDU in hexadecimal format		
<index>	Index of message in selected storage **<mem2>**		

Example

```
AT+CMGF=1                                  //Set SMS message format as text mode
OK
AT+CSCS="GSM"                              //Set character set as GSM which is used by the TE
OK
AT+CMGW="15021012496"
> This is a test from Quectel              //Enter in text, <CTRL+Z> write message, <ESC> quits
                                             without sending
+CMGW: 4

OK
```

8.10. AT+CMSS Send SMS Message from Storage

AT+CMSS Send SMS Message from Storage	
Test Command **AT+CMSS=?**	Response **OK**
Write Command **AT+CMSS=<index>[,<da>[,<toda>]]**	Response TA sends message with location value **<index>** from message storage **<mem2>** to the network (SMS-SUBMIT). If new recipient address **<da>** is given, it shall be used instead of the one stored with the message. Reference value **<mr>** is returned to the TE on successful message delivery. Values can be used to identify message upon unsolicited delivery status report result code. 1) If text mode (**+CMGF=1**) and sent successfully: **+CMSS: <mr> [,<scts>]** **OK**

Quectel Confidential

	2) If PDU mode(**+CMGF=0**) and sent successfully; **+CMSS: <mr> [,<ackpdu>]** **OK** 3) If error is related to ME functionality: **+CMS ERROR: <err>**
Maximum Response Time	120s, determined by network.
Reference GSM 07.05	

Parameter

<index>	Integer type; value in the range of location numbers supported by the associated memory
<da>	GSM 03.40 TP-Destination-Address Address-Value field in string format; BCD numbers (or GSM default alphabet characters) are converted to characters of the currently selected TE character set (specified by **+CSCS** in TS 07.07); type of address given by **<toda>**
<toda>	GSM 04.11 TP-Destination-Address Type-of-Address octet in integer format (when first character of **<da>** is + (IRA 43) default value is 145, otherwise default value is 129)
<mr>	GSM 03.40 TP-Message-Reference in integer format
<scts>	GSM 03.40 TP-Service-Centre-Time-Stamp in time-string format (refer to **<dt>**)
<ackpdu>	In the case of SMS: GSM 04.11 SC address followed by GSM 03.40 TPDU in hexadecimal format: ME/TA converts each octet of TP data unit into two IRA character long hexadecimal number (e.g. octet with integer value 42 is presented to TE as two characters 2A (IRA 50 and 65)). In the case of CBS: GSM 03.41 TPDU in hexadecimal format

8.11. AT+CMGC Send SMS Command

AT+CMGC Send SMS Command	
Test Command **AT+CMGC=?**	Response **OK**
Write Command 1) If text mode (**+CMGF=1**): **AT+CMGC=<fo>[,<ct>,<pid>,<mn>,<da>,<toda>]<CR>** **text is entered** <ctrl-Z/ESC> ESC quits without sending 2) If PDU mode (**+CMGF=**0):	Response TA transmits SMS command message from a TE to the network (SMS-COMMAND). Message reference value **<mr>** is returned to the TE on successful message delivery. Value can be used to identify message upon unsolicited delivery status report result code. 1) If text mode(**+CMGF=1**) and sent successfully: **+CMGC: <mr> [,<scts>]**

AT+CMGC=<length><CR> **PDU is given** <ctrl-Z/ESC>	**OK** 2) If PDU mode(**+CMGF=0**) and sent successfully: **+CMGC: <mr> [,<ackpdu>]** **OK** 3) If error is related to ME functionality: **+CMS ERROR: <err>**
Maximum Response Time	300ms
Reference GSM 07.05	

Parameter

<fo>	First octet of GSM 03.40 SMS-COMMAND (default value is 2) in integer format
<ct>	GSM 03.40 TP-Command-Type in integer format (default value is 0)
<pid>	GSM 03.40 TP-Protocol-Identifier in integer format (default value is 0)
<mn>	GSM 03.40 TP-Message-Number in integer format
<da>	GSM 03.40 TP-Destination-Address Address-Value field in string format; BCD numbers (or GSM default alphabet characters) are converted to characters of the currently selected TE character set (specified by **+CSCS** in TS 07.07); type of address given by **<toda>**
<toda>	GSM 04.11 TP-Destination-Address Type-of-Address octet in integer format (when first character of **<da>** is + (IRA 43) default value is 145, otherwise default value is 129) 129 Unknown type(IDSN format number) 145 International number type(ISDN format)
<length>	Integer type value indicating in PDU mode (**+CMGF=0**), the length of the actual TP data unit in octets (i.e. the RP layer SMSC address octets are not counted in the length)
<mr>	GSM 03.40 TP-Message-Reference in integer format
<scts>	GSM 03.40 TP-Service-Centre-Time-Stamp in time-string format (refer to **<dt>**)
<ackpdu>	In the case of SMS: GSM 04.11 SC address followed by GSM 03.40 TPDU in hexadecimal format: ME/TA converts each octet of TP data unit into two IRA character long hexadecimal number (e.g. octet with integer value 42 is presented to TE as two characters 2A (IRA 50 and 65)). In the case of CBS: GSM 03.41 TPDU in hexadecimal format

8.12. AT+CNMI New SMS Message Indications

AT+CNMI New SMS Message Indications	
Test Command **AT+CNMI=?**	Response **+CNMI:** (list of supported **<mode>**s),(list of supported **<mt>**s),(list of supported **<bm>**s),(list of supported

	<ds>s),(list of supported **<bfr>**s) **OK**
Read Command **AT+CNMI?**	Response **+CNMI: <mode>,<mt>,<bm>,<ds>,<bfr>** **OK**
Write Command **AT+CNMI=[<mode>[,<mt>[,<bm>[,<ds>[,<bfr>]]]]]**	Response TA selects the procedure on how the received new messages from the network are indicated to the TE when TE is active, e.g. DTR signal is ON. If TE is inactive (e.g. DTR signal is OFF), receiving message should be done as specified in GSM 03.38. **OK** If error is related to ME functionality: **ERROR**
Maximum Response Time	300ms
Reference GSM 07.05	

Parameter

<mode>	0	Buffer unsolicited result codes in the TA. If TA result code buffer is full, indications can be buffered in some other place or the oldest indications may be discarded and replaced with the new received indications
	1	Discard indication and reject new received message unsolicited result codes when TA-TE link is reserved (e.g. in on-line data mode). Otherwise forward them directly to the TE
	2	Buffer unsolicited result codes in the TA when TA-TE link is reserved (e.g. in on-line data mode) and flush them to the TE after reservation. Otherwise forward them directly to the TE
	3	Forward unsolicited result codes directly to the TE. TA-TE link specific inband technique used to embed result codes and data when TA is in on-line data mode
<mt>	(The rules for storing received SMS depend on its data coding scheme (refer to GSM 03.38 [2]), preferred memory storage (**+CPMS**) setting and this value):	
	0	No SMS-DELIVER indications are routed to the TE
	1	If SMS-DELIVER is stored into ME/TA, indication of the memory location is routed to the TE by using unsolicited result code: **+CMTI: <mem>,<index>**
	2	SMS-DELIVERs (except class 2) are routed directly to the TE using unsolicited result code: **+CMT: [<alpha>],<length><CR><LF><pdu>** (PDU mode enabled) or **+CMT: <oa>, [<alpha>],<scts>**

Quectel Confidential

		[,<tooa>,<fo>,<pid>,<dcs>,<sca>,<tosca>,<length>]<CR><LF><data> (Text mode enabled; about parameters in italics, refer to Command Show Text Mode Parameters **+CSDH**). Class 2 messages result in indication as defined in **<mt>**=1
	3	Class 3 SMS-DELIVERs are routed directly to TE by using unsolicited result codes defined in **<mt>**=2. Messages of other classes result in indication as defined in **<mt>**=1
<bm>	(The rules for storing received CBMs depend on its data coding scheme (refer to GSM 03.38 [2]), the setting of Select CBM Types (**+CSCB**) and this value):	
	0	No CBM indications are routed to the TE
	2	New CBMs are routed directly to the TE by using unsolicited result code: **+CBM: <length>**<CR><LF>**<pdu>** (PDU mode enabled) or **+CBM: <sn>,<mid>,<dcs>,<page>,<pages>**<CR><LF>**<data>** (Text mode enabled)
	3	Class 3 CBMs are routed directly to TE by using unsolicited result codes defined in **<bm>**=2. If CBM storage is supported, messages of other classes result in indication as defined in **<bm>**=1
<ds>	0	No SMS-STATUS-REPORTs are routed to the TE
	1	SMS-STATUS-REPORTs are routed to the TE by using unsolicited result code: **+CDS: <length>**<CR><LF>**<pdu>** (PDU mode enabled) or **+CDS: <fo>,<mr>,[<ra>],[<tora>],<scts>,<dt>,<st>** (Text mode enabled)
<bfr>	0	TA buffer of unsolicited result codes defined in this command is flushed to the TE when **<mode>** 1...3 is entered (**OK** response shall be given before flushing the codes)
	1	TA buffer of unsolicited result codes defined within this command is cleared when **<mode>**1…3 is entered

NOTE

Unsolicited result code

+CMTI: <mem>,<index>	Indicates that new message has been received
+CMT: [<alpha>],<length><CR><LF><pdu>	Short message is output directly
+CBM: <length><CR><LF><pdu>	Cell broadcast message is output directly

Example

```
AT+CMGF=1                          //Set SMS message format as text mode
OK
AT+CSCS="GSM"                      //Set character set as GSM which is used by the TE
OK
AT+CNMI=2,1                        //SMS-DELIVER is stored into ME/TA, indication of the
                                     memory location is routed to the TE
OK

+CMTI: "SM",5                      //Indicate that new message has been received
```

Quectel Confidential

```
AT+CNMI=2,2                                  //Set SMS-DELIVERs are routed directly to the TE
OK

+CMT: "+8615021012496"," ","2010/09/25 17:25:01+32",145,4,0,241,"+8613800210500",145,27
This is a test from Quectel                  //Short message is output directly
```

8.13. AT+CRES Restore SMS Settings

AT+CRES Restore SMS Settings	
Test Command **AT+CRES=?**	Response **+CRES:** (list of supported **<profile>**s) **OK**
Write Command **AT+CRES[=<profile>]**	Response TA restores SMS settings from non-volatile memory to active memory. A TA can contain several profiles of settings. Settings specified in commands service centre address **+CSCA**, set message parameters **+CSMP** and select cell broadcast message types **+CSCB** (if implemented) are restored. Certain settings may not be supported by the storage (e.g. SIM SMS parameters) and therefore cannot be restored. **OK** If error is related to ME functionality: **ERROR**
Maximum Response Time	300ms
Reference GSM 07.05	

Parameter

<profile>	0-3	Manufacturer specific profile number where settings are to be stored

Quectel Confidential

8.14. AT+CSAS Save SMS Settings

AT+CSAS Save SMS Settings	
Test Command **AT+CSAS=?**	Response **+CSAS:** (list of supported **<profile>**s) **OK**
Write Command **AT+CSAS[=<profile>]**	Response TA saves active message service settings to non-volatile memory. A TA can contain several profiles of settings. Settings specified in commands service centre address +CSCA, Set Message Parameters **+CSMP** and Select cell broadcast message Types **+CSCB** (if implemented) are saved. Certain settings may not be supported by the storage (e.g. SIM SMS parameters) and therefore cannot be saved. **OK** If error is related to ME functionality: **ERROR**
Maximum Response Time	300ms
Reference GSM 07.05	

Parameter

<profile>	0-3	Manufacturer specific profile number where settings are to be stored

8.15. AT+CSCB Select Cell Broadcast SMS Messages

AT+CSCB Select Cell Broadcast SMS Messages	
Test Command **AT+CSCB=?**	Response **+CSCB:** (list of supported **<mode>**s) **OK**
Read Command **AT+CSCB?**	Response **+CSCB: <mode>,<mids>,<dcss>** **OK**

Quectel Confidential

Write Command **AT+CSCB=<mode>[,mids>[,<dcss>]]**	Response TA selects which types of CBMs are to be received by the ME. **OK** If error is related to ME functionality: **+CMS ERROR: <err>**
Maximum Response Time	300ms
Reference GSM 07.05	

Parameter

<mode>	0	Message types specified in **<mids>** and **<dcss>** are accepted
	1	Message types specified in **<mids>** and **<dcss>** are not accepted
<mids>	String type; all different possible combinations of CBM message identifiers (refer to **<mid>**) (default is empty string) e.g. "0,1,5,320-478,922"	
<dcss>	String type; all different possible combinations of CBM data coding schemes (refer to **<dcs>**) (default is empty string) e.g. "0-3,5"	

NOTE

The Command writes the parameters in NON-VOLATILE memory.

8.16. AT+CSDH Show SMS Text Mode Parameters

AT+CSDH Show SMS Text Mode Parameters	
Test Command **AT+CSDH=?**	Response **+CSDH:** (list of supported **<show>**s) **OK**
Read Command **AT+CSDH?**	Response **+CSDH: <show>** **OK**
Write Command **AT+CSDH=[<show>]**	Response TA determines whether detailed header information is shown in text mode result codes.

Quectel Confidential

	OK
Maximum Response Time	300ms
Reference GSM 07.05	

Parameter

<show>	0	Do not show header values defined in commands **+CSCA** and **+CSMP** (**<sca>**, **<tosca>**, **<fo>**, **<vp>**, **<pid>** and **<dcs>**) nor **<length>**, **<toda>** or **<tooa>** in **+CMT**, **+CMGL**, **+CMGR** result codes for SMS-DELIVERs and SMS-SUBMITs in text mode
	1	Show the values in result codes

Example

```
AT+CSDH=0
OK
AT+CMGR=3
+CMGR: "REC READ","+8615021012496","","2010/09/25 15:06:37+32"
This is a test from Quectel

OK
AT+CSDH=1
OK
AT+CMGR=3
+CMGR: "REC READ","+8615021012496", ,"2010/09/25 15:06:37+32",145,4,0,241,"+861
3800210500",145,27
This is a test from Quectel

OK
```

8.17. AT+CSMP Set SMS Text Mode Parameters

AT+CSMP Set SMS Text Mode Parameters	
Test Command **AT+CSMP=?**	Response **+CSMP:** (list of supported **<fo>**s), (list of supported **<vp>**s), (list of supported **<pid>**s), (list of supported **<dcs>**s) **OK**

Quectel Confidential

Read Command **AT+CSMP?**	Response **+CSMP: <fo>,<vp>,<pid>,<dcs>** **OK**
Write Command **AT+CSMP=[<fo>[,<vp>[,<pid>[,<dcs>]]]]**	Response TA selects values for additional parameters needed when SM is sent to the network or placed in a storage when text mode is selected (**+CMGF=1**). It is possible to set the validity period starting from when the SM is received by the SMSC (**<vp>** is in range 0... 255) or define the absolute time of the validity period termination (**<vp>** is a string). **OK**
Maximum Response Time	300ms
Reference GSM 07.05	

Parameter

<fo>	Depending on the Command or result code: first octet of GSM 03.40 SMS-DELIVER, SMS-SUBMIT (default value is 17), SMS-STATUS-REPORT, or SMS-COMMAND (default value is 2) in integer format. SMS status report is supported under text mode if **<fo>** is set to 49
<vp>	Depending on SMS-SUBMIT **<fo>** setting: GSM 03.40 TP-Validity-Period either in integer format (default 167) or in time-string format (refer to **<dt>**)
<pid>	GSM 03.40 TP-Protocol-Identifier in integer format (default value is 0)
<dcs>	GSM 03.38 SMS Data Coding Scheme in Integer format

NOTE

The Command writes the parameters in NON-VOLATILE memory.

8.18. AT+QCLASS0 Store Class 0 SMS to SIM when Receiving Class 0 SMS

AT+QCLASS0 Store Class 0 SMS to SIM when Receiving Class 0 SMS	
Test Command **AT+QCLASS0=?**	Response **+QCLASS0:** (list of supported **<mode>**s)

Quectel Confidential

	OK
Read Command **AT+QCLASS0?**	Response **+QCLASS0: <mode>** **OK**
Write Command **AT+QCLASS0=<mode>**	Response **OK** **ERROR**
Maximum Response Time	300ms
Reference	

Parameter

<mode>	0	Disable to store Class 0 SMS when receiving Class 0 SMS
	1	Enable to store Class 0 SMS when receiving Class 0 SMS

Example

```
For example message in text mode:
AT+CPMS?
+CPMS: "SM",6,50,"SM",6,50,"SM",6,50

OK
AT+QCLASS0=0                          //Disable to store SMS when receiving Class 0 SMS
OK

+CMT: "+8615021012496",,"2010/09/26 09:55:37+32"
TEST1 from Quectel                    //Short message is output directly
AT+QCLASS0=1                          //Enable to store SMS when receiving Class 0 SMS
OK

+CMTI: "SM",7                         //Indicate that new message has been received
AT+CMGR=7
+CMGR: "REC UNREAD","+8615021012496","","2010/09/26 09:56:17+32"
TEST2 from Quectel

OK
```

Quectel Confidential

8.19. AT+QMGDA Delete all SMS

AT+QMGDA Delete all SMS	
Test Command **AT+QMGDA=?**	Response **+QMGDA:** (listed of supported **<type>**s) **OK**
Write Command **AT+QMGDA=<type>**	Response **OK** **ERROR** **+CME ERROR: <err>**
Maximum Response Time	Depends on the storage of deleted messages.
Reference	

Parameter

<type>	1) If text mode:	
	"DEL READ"	Delete all read messages
	"DEL UNREAD"	Delete all unread messages
	"DEL SENT"	Delete all sent SMS
	"DEL UNSENT"	Delete all unsent SMS
	"DEL INBOX"	Delete all received SMS
	"DEL ALL"	Delete all SMS
	2) If PDU mode:	
	1	Delete all read messages
	2	Delete all unread messages
	3	Delete all sent SMS
	4	Delete all unsent SMS
	5	Delete all received SMS
	6	Delete all SMS

8.20. AT+QSMSCODE Configure SMS Code Mode

AT+QSMSCODE Configure SMS Code Mode	
Test Command **AT+QSMSCODE=?**	Response **+QSMSCODE:** (list of supported **<mode>**s) **OK**

Quectel Confidential

Read Command **AT+QSMSCODE?**	Response **+QSMSCODE: <mode>** **OK**
Write Command **AT+QSMSCODE=<mode>**	Response **OK** **ERROR**
Maximum Response Time	300ms
Reference	

Parameter

<mode>	0	Code mode according with NOKIA
	1	Code mode according with SIEMENS
	2	Code mode according with NOKIA, and hexadecimal 0x11 treated as "_" hexadecimal 0x02 treated as "$"

Quectel Confidential

9 Phonebook Commands

9.1. AT+CPBS Select Phonebook Memory Storage

AT+CPBS Select Phonebook Memory Storage	
Test Command **AT+CPBS=?**	Response **+CPBS:** (list of supported **<storage>**s) **OK**
Read Command **AT+CPBS?**	Response **+CPBS: <storage>[,<used>,<total>]** **OK**
Write Command **AT+CPBS=<storage>**	Response TA selects current phone book memory storage, which is used by other phone book commands. **OK**
Maximum Response Time	300ms
Reference GSM 07.07	

Parameter

<storage>	"MC"	ME missed (unanswered) calls list
	"RC"	ME received calls list
	"DC"	ME dialed calls list (**+CPBW** may not be applicable or this storage)(same as LD)
	"LA"	Last Number All list (LND/LNM/LNR)
	"ME"	ME phonebook
	"BN"	SIM barred dialed number
	"SD"	SIM service dial number
	"VM"	SIM voice mailbox
	"FD"	SIM fix dialing-phone book
	"LD"	SIM last-dialing-phone book
	"ON"	SIM (or ME) own numbers (MSISDNs) list
	"SM"	SIM phonebook

Quectel Confidential

<used>	Integer type value indicating the total number of used locations in selected memory
<total>	Integer type value indicating the total number of locations in selected memory

NOTE

SIM phonebook record can stores up to 250pcs and ME phonebook record can store up to 100pcs.

9.2. AT+CPBW Write Phonebook Entry

AT+CPBW Write Phonebook Entry	
Test Command **AT+CPBW=?**	Response TA returns location range supported by the current storage, the maximum length of **<number>** field, supported number formats of the storage, and the maximum length of **<text>** field. **+CPBW:** (The range of supported **<index>**s)**, <nlength>**, (list of supported **<type>**s), **<tlength>** **OK**
Write Command **AT+CPBW=<index>[,<number>[,<type>[,<text>]]]**	Response TA writes phone book entry in location number **<index>** in the current phone book memory storage selected with **+CPBS**. Entry fields written are phone number **<number>** (in the format **<type>**) and text **<text>** associated with the number. If those fields are omitted, phone book entry is deleted. If **<index>** is left out, but **<number>** is given, entry is written to the first free location in the phone book. **OK**
Maximum Response Time	300ms
Reference GSM 07.07	

Parameter

<nlength>	Maximum length of phone number
<tlength>	Maximum length of text for number
<index>	Location number
<number>	Phone number
<type>	Type of number

Quectel Confidential

	129	Unknown type(IDSN format number)
	145	International number type(ISDN format)
<text>	Text for phone number in current TE character set specified by **+CSCS**	

NOTE

The following characters in **<text>** must be entered via the escape sequence:

GSM char	Seq.Seq.(hex)	Note
\	\5C 5C 35 43	(backslash)
"	\22 5C 32 32	(string delimiter)
BSP	\08 5C 30 38	(backspace)
NULL	\00 5C 30 30	(GSM null)

'0' (GSM null) may cause problems for application layer software when reading string lengths.

Example

```
AT+CSCS="GSM"
OK
AT+CPBW=10,"15021012496",129,"QUECTEL"
OK                                  //Make a new phonebook entry at location 10
AT+CPBW=10                          //Delete entry at location 10
OK
```

9.3. AT+CPBR Read Current Phonebook Entries

AT+CPBR Read Current Phonebook Entries	
Test Command **AT+CPBR=?**	Response TA returns location range supported by the current storage as a compound value and the maximum lengths of **<number>** and **<text>** fields. **+CPBR:** (list of supported **<index>**s),**<nlength>**,**<tlength>** **OK**
Write Command **AT+CPBR=<index1>[,<index2>]**	Response TA returns phone book entries in location number range **<index1>... <index2>** from the current phone book memory storage selected with **+CPBS**. If **<index2>** is left out, only location **<index1>** is returned. **+CPBR:<index1>,<number>,<type>,<text>[<CR><LF>+CPBR: .....+CPBR: <index2>, <number>, <type>, <text>]**

Quectel Confidential

	OK
Maximum Response Time	300ms. Note: Operation of **<index2>**depends on the storage of read phonebook entries.
Reference GSM 07.07	

Parameter

<index>	Location number
<nlength>	Maximum length of phone number
<tlength>	Maximum length of name for number
<index1>	The first phone book record to read
<index2>	The last phonebook record to read
<number>	Phone number
<type>	Type of number
<text>	Text name for phone number in current TE character set specified by **+CSCS**

Example

```
AT+CSCS="GSM"
OK
AT+CPBR=10                                  //Query phone book entries in location 10
+CPBR: 10,"15021012496",129,"QUECTEL"

OK
```

9.4. AT+CPBF Find Phonebook Entries

AT+CPBF Find Phonebook Entries	
Test Command **AT+CPBF=?**	Response **+CPBF: <nlength>**,**<tlength>** **OK**
Write Command **AT+CPBF=[<findtext>]**	Response TA returns phone book entries (from the current phone book memory storage selected with **+CPBS**) which contain alphanumeric string **<findtext>**. **[+CPBF: <index1>, <number>,<type>, <text>[[...]** **<CR><LF>+CBPF: <index2>,<number>,<type>,<text>]**

Quectel Confidential

	OK
Maximum Response Time	Depends on the storage of phonebook entries.
Reference GSM 07.07	

Parameter

<findtext>	String type field of maximum length **<tlength>** in current TE character set specified by **+CSCS**.
<index1>	Integer type values in the range of location numbers of phone book memory
<index2>	Integer type values in the range of location numbers of phone book memory
<number>	Phone number in string type of format **<type>**
<type>	Type of address octet in integer format: 129 Unknown type (IDSN format number) 145 International number type (ISDN format)
<text>	String type field of maximum length **<tlength>** in current TE character set specified by **+CSCS**
<nlength>	Integer type value indicating the maximum length of field **<number>**
<tlength>	Integer type value indicating the maximum length of field **<text>**

9.5. AT+CNUM Subscriber Number

AT+CNUM Subscriber Number	
Test Command **AT+CNUM=?**	Response **OK**
Execution Command **AT+CNUM**	Response **+CNUM: [<alpha1>],<number1>,<type1>** **[<CR><LF>+CNUM: [<alpha2>],<number2>,<type2>** **[...]]** **OK** **+CME ERROR: <err>**
Maximum Response Time	300ms
Reference GSM 07.07	

Quectel Confidential

Parameter

<alpha*x*>	Optional alphanumeric string associated with **<numberx>**;used character set should be the one selected with command. Select TE character set **+CSCS**
<number*x*>	Phone number in string type of format specified by **<type*x*>**
<type*x*>	Type of address octet in integer format (refer to GSM 04.08subclause 10.5.4.7)

Quectel Confidential

10 GPRS Commands

10.1. AT+CGATT Attach to/Detach from GPRS Service

AT+CGATT Attach to/Detach from GPRS Service	
Test Command **AT+CGATT=?**	Response **+CGATT:** (list of supported **<state>**s) **OK**
Read Command **AT+CGATT?**	Response **+CGATT: <state>** **OK**
Write Command **AT+CGATT=<state>**	Response **OK** If error is related to ME functionality: **+CME ERROR: <err>**
Maximum Response Time	75s, determined by network.
Reference GSM 07.07	

Parameter

<state>	Indicates the state of GPRS attachment 0 Detached 1 Attached Other values are reserved and will result in an **ERROR** response to the Write Command

Example

```
AT+CGATT=1                    //Attach to GPRS service
OK
AT+CGATT=0                    //Detach from GPRS service
OK
```

Quectel Confidential

AT+CGATT?	//Query the current GPRS service state
+CGATT: 0 OK	

10.2. AT+CGDCONT Define PDP Context

AT+CGDCONT Define PDP Context	
Test Command **AT+CGDCONT=?**	Response **+CGDCONT:** (range of supported **<cid>**s), **<PDP_type>**, **<APN>**, **<PDP_addr>**, (list of supported **<data_comp>**s), (list of supported **<head_comp>**s) **OK**
Read Command **AT+CGDCONT?**	Response **+CGDCONT: <cid>,<PDP_type>,<APN>,<PDP_addr>,<data_comp>,<head_comp>** **<CR><LF>+CGDCONT: <cid>,<PDP_type>,<APN>,<PDP_addr>,<data_comp>,<head_comp>** **…** **OK**
Write Command **AT+CGDCONT=<cid>[,<PDP_type>[,<APN>[,<PDP_addr>[,<d_comp>[,<h_comp>]]]]]**	Response **OK** **ERROR**
Maximum Response Time	300ms
Reference GSM 07.07	

Parameter

<cid>	(PDP Context Identifier) a numeric parameter which specifies a particular PDP context definition. The parameter is local to the TE-MT interface and is used in other PDP context-related commands. The range of permitted values (minimum value=1) is returned by the test form of the command
<PDP_type>	(Packet Data Protocol type) a string parameter which specifies the type of packet data protocol X25 ITU-T/CCITT X.25 layer 3 IP Internet Protocol (IETF STD 5) OSPIH Internet Hosted Octet Stream Protocol PPP Point to Point Protocol (IETF STD 51)

Quectel Confidential

<APN>	(Access Point Name) a string parameter that is a logical name that is used to select the GGSN or the external packet data network. If the value is null or omitted, then the subscription value will be requested
<PDP_addr>	A string parameter identifies the MT in the address space applicable to the PDP. If the value is null or omitted, then a value may be provided by the TE during the PDP startup procedure or, failing that, a dynamic address will be requested. The allocated address may be read using the **+CGPADDR** command
<d_comp>	A numeric parameter that controls PDP data compression 0 Off (default if value is omitted) Other values are reserved
<h_comp>	A numeric parameter that controls PDP header compression 0 Off (default if value is omitted) Other values are reserved

Example

```
AT+CGDCONT=1,"IP","CMNET"          //Define PDP context, <cid>=1,
                                     <PDP_type>=IP,<APN>=CMNET
OK
```

10.3. AT+CGQREQ Quality of Service Profile (Requested)

AT+CGQREQ Quality of Service Profile (Requested)	
Test Command **AT+CGQREQ=?**	Response **+CGQREQ: <PDP_type>**,(list of supported **<precedence>**s),(list of supported **<delay>**s),(list of supported **<reliability>**s),(list of supported **<peak>**s),(list of supported **<mean>**s) **OK**
Read Command **AT+CGQREQ?**	Response **+CGQREQ: <cid>,<precedence>,<delay>,<reliability>,<peak>,<mean>** **<CR><LF>+CGQREQ: <cid>,<precedence>,<delay>,<reliability>,<peak>,<mean>** **…** **OK**
Write Command **AT+CGQREQ=<cid>[,<precedence>[,<delay>[,<reliability>[,<peak>[,<mean**	Response **OK**

Quectel Confidential

>]]]]]	If error is related to ME functionality: **+CME ERROR: <err>**
Maximum Response Time	300ms
Reference GSM 07.07	

Parameter

<cid>	A numeric parameter which specifies a particular PDP context definition (see **+CGDCONT** command)
The following parameter are defined in GSM 03.60	
<precedence>	A numeric parameter which specifies the precedence class
<delay>	A numeric parameter which specifies the delay class
<reliability>	A numeric parameter which specifies the reliability class
<peak>	A numeric parameter which specifies the peak throughput class
<mean>	A numeric parameter which specifies the mean throughput class

10.4. AT+CGQMIN Quality of Service Profile (Minimum Acceptable)

AT+CGQMIN	**Quality of Service Profile (Minimum Acceptable)**
Test Command **AT+CGQMIN=?**	Response **+CGQMIN: <PDP_type>**, (list of supported **<precedence>**s), (list of supported **<delay>**s), (list of supported **<reliability>**s), (list of supported **<peak>**s), (list of supported **<mean>**s) **OK**
Read Command **AT+CGQMIN?**	Response **+CGQMIN:** **<cid>,<precedence>,<delay>,<reliability>,<peak>,<mean>** **<CR><LF>+CGQMIN:** **<cid>,<precedence>,<delay>,<reliability>,<peak>,<mean>** **…** **OK**
Write Command **AT+CGQMIN=<cid>[,<precedence>[,<delay>[,<reliability>[,<peak>[,<mean>]]]]]**	Response **OK** If error is related to ME functionality:

Quectel Confidential

	+CME ERROR: <err>
Maximum Response Time	300ms
Reference GSM 07.07	

Parameter

<cid>	A numeric parameter which specifies a particular PDP context definition (see **+CGDCONT** command)
The following parameters are defined in GSM 03.60.	
<precedence>	A numeric parameter which specifies the precedence class
<delay>	A numeric parameter which specifies the delay class
<reliability>	A numeric parameter which specifies the reliability class
<peak>	A numeric parameter which specifies the peak throughput class
<mean>	A numeric parameter which specifies the mean throughput class

10.5. AT+CGACT PDP Context Activate or Deactivate

AT+CGACT PDP Context Activate or Deactivate	
Test Command **AT+CGACT=?**	Response **+CGACT:** (list of supported **<state>**s) **OK**
Read Command **AT+CGACT?**	Response **+CGACT:** **<cid>,<state>[<CR><LF>+CGACT:<cid><state>…]** **OK**
Write Command **AT+CGACT=<state>[,<cid>]**	Response **OK** **NO CARRIER** If error is related to ME functionality: **+CME ERROR: <err>**
Maximum Response Time	150s, determined by network.
Reference GSM 07.07	

Quectel Confidential

Parameter

<state>	Indicates the state of PDP context activation 0 Deactivated 1 Activated Other values are reserved and will result in an ERROR response to the Write Command
<cid>	A numeric parameter which specifies a particular PDP context definition (see **+CGDCONT** command). The default value is 1.

NOTE

If context is deactivated successfully, NO CARRIER is returned.

Example

```
AT+CGDCONT=1,"IP","CMNET"          //Define PDP context
OK
AT+CGACT=1,1                       //Activated PDP
OK
AT+CGACT=0,1                       //Deactivated PDP
NO CARRIER
```

10.6. AT+CGDATA Enter Data State

AT+CGDATA Enter Data State	
Test Command **AT+CGDATA=?**	Response **+CGDATA:** (list of supported **<L2P>**s) **OK**
Write Command **AT+CGDATA=<L2P>[,<cid>[,<cid>[,…]]]**	Response **OK** **NO CARRIER** If error is related to ME functionality: **+CME ERROR: <err>**
Maximum Response Time	300ms
Reference GSM 07.07	

Quectel Confidential

Parameter

<L2P>	A string parameter that indicates the layer 2 protocol to be used between the TE and MT: PPP - Point to Point protocol for a PDP such as IP Other values are not supported and will result in an **ERROR** response to the execution command
<cid>	A numeric parameter which specifies a particular PDP context definition (see **+CGDCONT** command)

10.7. AT+CGPADDR Show PDP Address

AT+CGPADDR Show PDP Address	
Test Command **AT+CGPADDR=?**	Response **+CGPADDR:** (list of defined **<cid>**s) **OK**
Write Command **AT+CGPADDR=<cid>**	Response **+CGPADDR: <cid>[,<PDP_addr>]** **OK** **ERROR**
Maximum Response Time	300ms
Reference GSM 07.07	

Parameter

<cid>	A numeric parameter which specifies a particular PDP context definition (see **+CGDCONT** command)
<PDP_addr>	A string that identifies the MT in the address space applicable to the PDP. The address may be static or dynamic. For a static address, it will be the one set by the **+CGDCONT** command when the context was defined. For a dynamic address it will be the one assigned during the last PDP context activation that used the context definition referred to **<cid>**. **<PDP_address>** is omitted if none is available

NOTE

This command dictates the behaviour of PPP in the ME but not that of any other GPRS-enabled foreground layer, e.g. browser.

Quectel Confidential

Example

```
AT+CGDCONT=1,"IP","CMNET"          //Define PDP context
OK
AT+CGACT=1,1                       //Activated PDP
OK
AT+CGPADDR=1                       //Show PDP address
+CGPADDR: 1,"10.76.51.180"

OK
```

10.8. AT+CGCLASS GPRS Mobile Station Class

AT+CGCLASS GPRS Mobile Station Class	
Test Command **AT+CGCLASS=?**	Response **+CGCLASS:** (list of supported **<class>**s) **OK**
Read Command **AT+CGCLASS?**	Response **+CGCLASS: <class>** **OK**
Write Command **AT+CGCLASS=<class>**	Response **OK** **ERROR** If error is related to ME functionality: **+CME ERROR: <err>**
Maximum Response Time	30s, determined by network.
Reference GSM 07.07	

Parameter

<class>	A string parameter which indicates the GPRS mobile class (Functionality in descending order) "B" Class B "CG" Class C in GPRS only mode "CC" Class C in circuit switched only mode

Quectel Confidential

10.9. AT+CGEREP Control Unsolicited GPRS Event Reporting

AT+CGEREP Control Unsolicited GPRS Event Reporting	
Test Command **AT+CGEREP=?**	Response **+CGEREP:** (list of supported **<mode>**s) **OK**
Read Command **AT+CGEREP?**	Response **+CGEREP: <mode>** **OK**
Maximum Response Time	300ms
Write Command **AT+CGEREP=<mode>**	Response **OK** **ERROR**
Reference GSM 07.07	

Parameter

<mode>	0	Buffer unsolicited result codes in the MT; if MT result code buffer is full, the oldest one can be discarded. No codes are forwarded to the TE
	1	Discard unsolicited result codes when MT-TE link is reserved (e.g. in on-line data mode); otherwise forward them directly to the TE

NOTE

Unsolicited Result Codes supported:
+CGEV: NW DEACT <PDP_type>, <PDP_addr>[,<cid>]
+CGEV: ME DEACT <PDP_type>, <PDP_addr>[,<cid>]
+CGEV: NW DETACH
+CGEV: ME CLASS <class>
Parameters
<PDP_type> Packet Data Protocol type (see **+CGDCONT** command)
<PDP_addr> Packet Data Protocol address (see **+CGDCONT** command)
<cid> Context ID (see **+CGDCONT** command)
<class> GPRS mobile class (see **+CGCLASS** command)

Quectel Confidential

10.10. AT+CGREG Network Registration Status

AT+CGREG Network Registration Status	
Test Command **AT+CGREG=?**	Response **+CGREG:** (list of supported **<n>**s) **OK**
Read Command **AT+CGREG?**	Response **+CGREG: <n>,<stat>[,<lac>,<ci>]** **OK**
Write Command **AT+CGREG=[<n>]**	Response **OK** **ERROR**
Maximum Response Time	300ms
Reference GSM 07.07	

Parameter

<n>	0	Disable network registration unsolicited result code
	1	Enable network registration unsolicited result code **+CGREG:<stat>**
	2	Enable network registration and location information unsolicited result code **+CGREG: <stat>[,<lac>,<ci>]**
<stat>	0	Not registered, ME is not currently searching a new operator to register to
	1	Registered, home network
	2	Not registered, but ME is currently searching a new operator to register to
	3	Registration denied
	4	Unknown
	5	Registered, roaming
<lac>	String type; two byte location area code in hexadecimal format (e.g. "00C3" equals 195 in decimal)	
<ci>	String type; two bytes cell ID in hexadecimal format	

NOTE

For parameter state, options of 0 and 1 are supported only.

Quectel Confidential

Example

```
AT+CGATT=0
NO CARRIER

+CGREG: 0,"1878","0873"
AT+CGATT=1
OK

+CGREG: 2,"1878","0873"

+CGREG: 1,"1878","0873"
```

10.11. AT+CGSMS Select Service for MO SMS Messages

AT+CGSMS Select Service for MO SMS Messages	
Test Command **AT+CGSMS=?**	Response **+CGSMS:** (list of currently available **<service>**s) **OK**
Read Command **AT+CGSMS?**	Response **+CGSMS: <service>** **OK**
Write Command **AT+CGSMS=[<service>]**	Response **OK** If error is related to ME functionality: **+CME ERROR: <err>**
Maximum Response Time	300ms
Reference GSM 07.07	

Parameter

<service>	A numeric parameter which indicates the service or service preference to be used	
	0	GPRS
	1	Circuit switch
	2	GPRS preferred (use circuit switched if GPRS not available)
	3	Circuit switch preferred (use GPRS if circuit switched not available)

Quectel Confidential

NOTE

The circuit switched service route is the default method.

10.12. AT+QGPCLASS Change GPRS Multi-slot Class

AT+QGPCLASS Change GPRS Multi-slot Class	
Test Command **AT+QGPCLASS=?**	Response **MULTISLOT CLASS:** (list of currently available **<class>**s) **OK**
Read Command **AT+QGPCLASS?**	Response **MULTISLOT CLASS: <class>** **OK**
Write Command **AT+QGPCLASS=<class>**	Response **OK** **ERROR**
Maximum Response Time	300ms
Reference	

Parameter

<class>	GPRS multi-slot class 1-12 Default value is 12

NOTE

Need to reboot for the change of GPRS multi-slot class to take effect.

Quectel Confidential

11 TCPIP Commands

11.1. AT+QIOPEN Start up TCP or UDP Connection

AT+QIOPEN Start up TCP or UDP Connection	
Test Command **AT+QIOPEN=?**	Response **+QIOPEN:** (list of supported **<mode>**)s,(**IP address range**),(**port**) <CR><LF>**+QIOPEN:** (list of supported **<mode>**s),(**domain name**),(**port**) **OK**
Write Command **AT+QIOPEN=[<index>,]<mode>,<IP address>/<domain name>,<port>**	Response If format is right, respond: **OK** Otherwise respond: **ERROR** If the connection has already existed, respond: **ALREADY CONNECT** And then if connection is successful, respond: **[<index>,] CONNECT OK** Otherwise respond: **[<index>,] CONNECT FAIL**
Maximum Response Time	75s, determined by network.
Reference	

Parameter

<index>	A numeric indicates which socket opens the connection. M66 supports at most 6 sockets at the same time. This parameter is necessary only if **AT+QIMUX** was set as 1 (refer to **AT+QIMUX**). When **AT+QIMUX** was set as 0, the parameter MUST be omitted

Quectel Confidential

<mode>	A string parameter which indicates the connection type "TCP" Establish a TCP connection "UDP" Establish a UDP connection
<IP address>	A string parameter that gives the address of the remote server in dotted decimal style.
<port>	The port of the remote server 0-65535
<domain name>	A string parameter which represents the domain name address of the remote server

NOTES

1. This command is allowed to establish a TCP/UDP connection only when the state is IP INITIAL or IP STATUS or IP CLOSE. So it is necessary to process "**AT+QIDEACT**" or "**AT+QICLOSE**" before establishing a TCP/UDP connection with this command when the state is not IP INITIAL or IP STATUS or IP CLOSE.
2. If **AT+QIMUX** was set as 0 and the current state is CONNECT OK, which means the connection channel is used, it will reply "ALREADY CONNECT" after issuing the Write command.

11.2. AT+QISEND Send Data through TCP or UDP Connection

AT+QISEND Send Data through TCP or UDP Connection	
Test Command **AT+QISEND=?**	Response **+QISEND: <length>** **OK**
Execution Command **AT+QISEND** response"> ", then type data to send, tap CTRL+Z to send, tap ESC to cancel the operation	Response This command is used to send changeable length data. If connection is not established or disconnected: **ERROR** If sending succeeds: **SEND OK** If sending fails: **SEND FAIL**
Write Command 1)When **AT+QIMUX=0** **AT+QISEND=<length>** 2)When **AT+QIMUX=1** **AT+QISEND=<index>[,<length>]**	Response This command is used to send fixed-length data or send data on the given socket (defined by **<index>**). If connection is not established or disconnected: **ERROR** If sending succeeds: **SEND OK** If sending fails: **SEND FAIL**

Quectel Confidential

Maximum Response Time	300ms
Reference	

Parameter

<index>	The index of the socket for sending data. This parameter is necessary only if **AT+QIMUX** was set as 1 (refer to **AT+QIMUX**). When **AT+QIMUX** was set as 0, the parameter MUST be omitted
<length>	A numeric parameter which indicates the length of data to be sent, it MUST be less than 1460

NOTES

1. This command is used to send data on the TCP or UDP connection that has been established already. 'Ctrl+Z' is used as a termination symbol. ESC is used to cancel sending data.
2. The maximum length of the data to input at a time is 1460.
3. There are at most 1460 bytes that can be sent each time.
4. Only send data at the status of connection, otherwise respond with ERROR.
5. SEND OK means the data have been put into the send window to send rather than it has received the ACK message for the data from the remote node. To check whether the data has been sent to the remote node, it is necessary to execute the command **AT+QISACK** to query it.

11.3. AT+QICLOSE Close TCP or UDP Connection

AT+QICLOSE Close TCP or UDP Connection	
Test Command **AT+QICLOSE=?**	Response **OK**
Execution Command **AT+QICLOSE**	Response If close succeeds: **CLOSE OK** If close fails: **ERROR**
Write Command **AT+QICLOSE=<index>**	Response If close succeeds: **<index>, CLOSE OK** If close fails: **ERROR**
Maximum Response Time	300ms
Reference	

Quectel Confidential

Parameter

<index>	The index of the socket for sending data. This parameter is necessary only if **AT+QIMUX** was set as 1 (refer to **AT+QIMUX**). When **AT+QIMUX** was set as 0, the parameter MUST be omitted

NOTES

1. Execution Command **AT+QICLOSE**:
   - If **QISRVC** is 1 (please refer to **AT+QISRVC**) and **QIMUX** is 0 (please refer to **AT+QIMUX**), this command will close the connection in which the module is used as a client.
   - If **QISRVC** is 1 and **QIMUX** is 1, it will return ERROR.
   - If **QISRVC** is 2 and **QIMUX** equals 0 and the module is used as a server and some clients have been connected to it, this command will close the connection between the module and the remote client.
   - If **QISRVC** is 2 and **QIMUX** is 0 and the module is in listening state without any client, this command will cause the module to quit the listening state.
   - If **QISRVC** is 2 and **QIMUX** is 1 and the module is used as a server, this command will close all the income connection and cause the module to quit the listening state.
2. Write Command **AT+QICLOSE=<index>**:
   - This command is valid only if **QIMUX** is 1.
   - If **QISRVC** is 1 and **QIMUX** is 1, this command will close the corresponding connection according to **<index>** and the module used as a client in the connection.
   - If **QISRVC** is 2 and **QIMUX** is 1, this command will close the incoming connection according to **<index>**.
3. If **QISRVC** is 1 and **QIMUX** is 0, **AT+QICLOSE** only closes the connection when the statue is CONNECTING or CONNECT OK, otherwise respond with ERROR. After closing the connection, the status is IP CLOSE.

11.4. AT+QIDEACT Deactivate GPRS/CSD PDP Context

AT+QIDEACT Deactivate GPRS/CSD PDP Context	
Test Command **AT+QIDEACT=?**	Response **OK**
Execution Command **AT+QIDEACT**	Response If close succeeds: **DEACT OK** If close fails: **ERROR**
Maximum Response Time	40s, determined by network.

Reference	

NOTES

1. Except at the status of IP INITIAL, you can deactivate GPRS/CSD PDP context by **AT+QIDEACT.** After closing the connection, the status becomes to IP INITIAL.
2. CSD context is not supported at present.

11.5. AT+QILPORT Set Local Port

AT+QILPORT Set Local Port	
Test Command **AT+QILPORT=?**	Response **+QILPORT:** (list of supported **<port>**s) **OK**
Read Command **AT+QILPORT?**	Response **<mode>: <port>** **<CR><LF><mode>: <port>** **OK**
Write Command **AT+QILPORT=<mode>,<port>**	Response **OK** **ERROR**
Maximum Response Time	300ms
Reference	

Parameter

<mode>	A string parameter which indicates the connection type "TCP" TCP local port "UDP" UDP local port
<port>	0-65535 A numeric parameter which indicates the local port

NOTE

This command is used to set the port for listening.

Quectel Confidential

11.6. AT+QIREGAPP Start TCPIP Task and Set APN, User Name and Password

AT+QIREGAPP Start TCPIP Task and Set APN, User Name and Password	
Test Command **AT+QIREGAPP=?**	Response **+QIREGAPP: "APN","USER","PWD"** **OK**
Read Command **AT+QIREGAPP?**	Response **+QIREGAPP: <apn>,<user name>,<password>** **OK**
Write Command **AT+QIREGAPP=<apn>,<user name>,< password>[,<rate>]**	Response **OK** **ERROR**
Execution Command **AT+QIREGAPP**	Response **OK** **ERROR**
Maximum Response Time	300ms
Reference	

Parameter

<apn>	A string parameter which indicates the GPRS access point name or the call number of CSD
<user name>	A string parameter which indicates the GPRS/CSD user name
<password>	A string parameter which indicates the GPRS/CSD password
<rate>	The speed of data transmit for CSD

NOTES

1. The write command and execution command of this command is valid only at the status of IP INITIAL. After operating this command, the status will become to IP START.
2. The value of **QICSGP** (please refer to **AT+QICSGP**) defines what kind of bearer (GPRS or CSD) the parameters are used for.
3. CSD function and related configuration are not supported at present.

Quectel Confidential

11.7. AT+QIACT Activate GPRS/CSD Context

AT+QIACT Activate GPRS/CSD Context	
Test Command **AT+QIACT=?**	Response **OK**
Execution Command **AT+QIACT**	Response **OK** **ERROR**
Maximum Response Time	150s, determined by network.
Reference	

NOTES

1. **AT+QIACT** only activates GPRS/CSD context at the status of IP START. After operating this command, the status will become to IP CONFIG. If TA accepts the activated operation, the status will become to IP IND; after GPRS/CSD context is activated successfully, the status will become to IP GPRSACT, respond with OK, and otherwise respond with ERROR.
2. CSD context is not supported at present.

11.8. AT+QILOCIP Get Local IP Address

AT+QILOCIP Get Local IP Address	
Test Command **AT+QILOCIP=?**	Response **OK**
Execution Command **AT+QILOCIP**	Response If execution successful, respond: **<IP address>** Otherwise respond: **ERROR**
Maximum Response Time	300ms
Reference	

Parameter

<IP address>	A string parameter which indicates the IP address assigned from GPRS or CSD network

Quectel Confidential

NOTES

1. Only at the following status: IP GPRSACT, IP STATUS, TCP/UDP CONNECTING, CONNECT OK, IP CLOSE can get local IP address by **AT+QILOCIP**, otherwise respond ERROR. And if the status before executing the command is IP GPRSACT, the status will become to IP STATUS after the command.
2. CSD function is not supported at present.

11.9. AT+QISTAT Query Current Connection Status

AT+QISTAT Query Current Connection Status	
Test Command **AT+QISTAT=?**	Response **OK**
Execution Command **AT+QISTAT**	Response When **AT+QIMUX=0**, respond: **OK** **STATE: <state>** When **AT+QIMUX=1**, respond: List of **(+QISTAT: <index>,<mode>,<addr>,<port><CR><LF>)** **OK**
Maximum Response Time	300ms
Reference	

Parameter

<state>	A string parameter to indicate the status of the connection	
	"IP INITIAL"	The TCPIP stack is in idle state
	"IP START"	The TCPIP stack has been registered
	"IP CONFIG"	It has been start-up to activate GPRS/CSD context
	"IP IND"	It is activating GPRS/CSD context
	"IP GPRSACT"	GPRS/CSD context has been activated successfully
	"IP STATUS"	The local IP address has been gotten by the command **AT+QILOCIP**
	"TCP CONNECTING"	It is trying to establish a TCP connection
	"UDP CONNECTING"	It is trying to establish a UDP connection
	"IP CLOSE"	The TCP/UDP connection has been closed
	"CONNECT OK"	The TCP/UDP connection has been established successfully

Quectel Confidential

	"PDP DEACT"	GPRS/CSD context was deactivated because of unknown reason

If **ATV** was set to 0 by the command **ATV0**, the TCPIP stack gives the following numeric to indicate the former status

0	"IP INITIAL"
1	"IP START"
2	"IP CONFIG"
3	"IP IND"
4	"IP GPRSACT"
5	"IP STATUS"
6	"TCP CONNECTING" or "UDP CONNECTING"
7	"IP CLOSE"
8	"CONNECT OK"
9	"PDP DEACT"

<index>	The index of the connection, the range is (0-5)
<mode>	The type of the connection "TCP" TCP connection "UDP" UDP connection
<addr>	The IP address of the remote
<port>	The port of the remote

NOTES

1. Display former style of response when **QIMUX=0** and the later style of response when **QIMUX=1**.
2. CSD context is not supported at present.

11.10. AT+QISTATE Query Connection Status of the Current Access

AT+QISTATE Query Connection Status of the Current Access	
Test Command **AT+QISTATE=?**	Response **OK**
Execution Command **AT+QISTATE**	Response When **AT+QIMUX=0**, respond: **OK** **STATE: <state>** When **AT+QIMUX=1**, respond: **OK**

Quectel Confidential

	STATE: <state> **+QISTATE: <index>,<mode>,<addr>,<port>,<socketstate>** **OK** Otherwise respond: **ERROR**
Maximum Response Time	300ms
Reference	

Parameter

<state>	A string parameter to indicate the status of the connection When **AT+QIMUX=0**: "IP INITIAL" The TCPIP stack is in idle state. "IP START" The TCPIP stack has been registered. "IP CONFIG" It has been start-up to activate GPRS/CSD context. "IP IND" It is activating GPRS/CSD context. "IP GPRSACT" GPRS/CSD context has been activated successfully. "IP STATUS" The local IP address has been gotten by the command **AT+QILOCIP**. "TCP CONNECTING" It is trying to establish a TCP connection. "UDP CONNECTING" It is trying to establish a UDP connection. "IP CLOSE" The TCP/UDP connection has been closed. "CONNECT OK" The TCP/UDP connection has been established successfully. "PDP DEACT" GPRS/CSD context was deactivated because of unknown reason. When **AT+QIMUX=1**: "IP INITIAL" The TCPIP stack is in idle state. "IP START" The TCPIP stack has been registered. "IP CONFIG" It has been start-up to activate GPRS/CSD context. "IP IND" It is activating GPRS/CSD context. "IP GPRSACT" GPRS/CSD context has been activated successfully. "IP STATUS" The local IP address has been gotten by the command **AT+QILOCIP**. “IP PROCESSING” Data phase. Processing the existing connection now. "PDP DEACT" GPRS/CSD context was deactivated because of unknown reason.
<index>	The index of the connection, the range is (0-5)

Quectel Confidential

<mode>	The type of the connection "TCP" TCP connection "UDP" UDP connection
<addr>	The IP address of the remote
<port>	The port of the remote
<socketstate>	A string parameter to indicate the status of the access connection, including INITIAL,CONNECTED.

11.11. AT+QISSTAT Query the Current Server Status

AT+QISSTAT Query the Current Server Status	
Test Command **AT+QISSTAT=?**	Response **OK**
Execution Command **AT+QISSTAT**	Response When **AT+QIMUX=0**, respond: **OK** **S: <ServerState>** When **AT+QIMUX=1**, respond: **OK** **S: <ServerState>** **C : <index>,<mode>,<addr>,<port>** Otherwise respond: **ERROR**
Maximum Response Time	300ms
Reference	

Parameter

<ServerState>	A string parameter to indicate the status of the connection "INITIAL" The TCPIP stack is in idle state "OPENNING" The TCPIP stack has been registered "LISTENING" Listening to server port "CLOSING" Closing connection now
<index>	The index of the connection, the range is (0-4)
<mode>	The type of the connection "TCP" TCP connection "UDP" UDP connection

Quectel Confidential

<addr>	The IP address of the remote
<port>	The port of the remote

11.12. AT+QIDNSCFG Configure Domain Name Server

AT+QIDNSCFG Configure Domain Name Server	
Test Command **AT+QIDNSCFG=?**	Response **OK**
Read Command **AT+QIDNSCFG?**	Response **PrimaryDns: <pri_dns>** **SecondaryDns: <sec_dns>** **OK**
Write Command **AT+QIDNSCFG=<pri_dns>[,<sec_dns>]**	Response **OK** **ERROR**
Maximum Response Time	300ms
Reference	

Parameter

<pri_dns>	A string parameter which indicates the IP address of the primary domain name server
<sec_dns>	A string parameter which indicates the IP address of the secondary domain name server

NOTES

1. Because TA will negotiate to get the DNS server from GPRS/CSD network automatically when activating GPRS/CSD context, it is STRONGLY suggested to configure the DNS server at the status of IP GPRSACT, IP STATUS, CONNECT OK and IP CLOSE if it is necessary.
2. CSD function and configuration are not supported currently.

11.13. AT+QIDNSGIP Query the IP Address of Given Domain Name

AT+QIDNSGIP Query the IP Address of Given Domain Name	
Test Command **AT+QIDNSGIP=?**	Response **OK**

Quectel Confidential

Write Command **AT+QIDNSGIP=<domain name>**	Response **OK** **ERROR** If succeeds, return: **<IP address>** If fails, return: **ERROR: <err>** **STATE: <state>**
Maximum Response Time	14s, determined by network.
Reference	

Parameter

<domain name>	A string parameter which indicates the domain name
<IP address>	A string parameter which indicates the IP address corresponding to the domain name
<err>	A numeric parameter which indicates the error code 1 DNS not Authorized 2 Invalid parameter 3 Network error 4 No server 5 Time out 6 No configuration 7 No memory 8 Unknown error
<state>	Refer to **AT+QISTAT**

11.14. AT+QIDNSIP Connect with IP Address or Domain Name Server

AT+QIDNSIP Connect with IP Address or Domain Name Server	
Test Command **AT+QIDNSIP=?**	Response **+QIDNSIP:** (list of supported **<mode>**s) **OK**
Read Command **AT+QIDNSIP?**	Response **+QIDNSIP: <mode>** **OK**
Write Command **AT+QIDNSIP=<mode>**	Response **OK** **ERROR**

Quectel Confidential

Maximum Response Time	300ms
Reference	

Parameter

<mode>	A numeric parameter indicates which kind of server format is used when establishing the connection: IP address server or domain name server 0 The address of the remote server is a dotted decimal IP address 1 The address of the remote server is a domain name

11.15. AT+QIHEAD Add an IP Header when Receiving Data

AT+QIHEAD Add an IP Header when Receiving Data	
Test Command **AT+QIHEAD=?**	Response **+QIHEAD:** (list of supported **<mode>**s) **OK**
Read Command **AT+QIHEAD?**	Response **+QIHEAD: <mode>** **OK**
Write Command **AT+QIHEAD=<mode>**	Response **OK** **ERROR**
Maximum Response Time	300ms
Reference	

Parameter

<mode>	A numeric parameter which indicates whether or not to add an IP header before the received data 0 DO Not add IP header 1 Add a header before the received data, and the format is "**IPD(data length):**"

Quectel Confidential

11.16. AT+QIAUTOS Set Auto Sending Timer

AT+QIAUTOS Set Auto Sending Timer	
Test Command **AT+QIAUTOS=?**	Response **+QIAUTOS:** (list of supported **<mode>**s), (list of supported **<time>**s) **OK**
Read Command **AT+QIAUTOS?**	Response **+QIAUTOS: <mode>,<time>** **OK**
Write Command **AT+QIAUTOS=<mode>[,<time>]**	Response **OK** **ERROR**
Maximum Response Time	300ms
Reference	

Parameter

<mode>	A numeric parameter which indicates whether or not to set timer when sending data 0 DO Not set timer for data sending 1 Set timer for data sending
<time>	A numeric parameter which indicates a time in seconds After the time expires since **AT+QISEND**, the input data will be sent automatically

11.17. AT+QIPROMPT Set Prompt of '>' when Sending Data

AT+QIPROMPT Set Prompt of '>' when Sending Data	
Test Command **AT+QIPROMPT=?**	Response **+QIPROMPT:** (list of supported **<send prompt>**s) **OK**
Read Command **AT+QIPROMPT?**	Response **+QIPROMPT: <send prompt>** **OK**
Write Command **AT+QIPROMPT=<send prompt>**	Response **OK**

Quectel Confidential

	ERROR
Maximum Response Time	300ms
Reference	

Parameter

<send prompt>	A numeric parameter which indicates whether or not to echo prompt ">" after issuing **AT+QISEND** Command 0 No prompt ">" and show "SEND OK" when sending successes 1 Echo prompt ">" and show "SEND OK" when sending successes 2 No prompt and not show "SEND OK" when sending successes 3 Echo prompt ">" and show “socket ID” "SEND OK" when sending successes

11.18. AT+QISERVER Configured as Server

AT+QISERVER Configured as Server	
Test Command **AT+QISERVER=?**	Response **OK**
Read Command **AT+QISERVER?**	Response **+QISERVER: <mode>, <num>** **OK**
Execution Command **AT+QISERVER**	Response **OK** **ERROR** If configured as server successfully, return: **SERVER OK** If configured as server unsuccessfully, return: **CONNECT FAIL**
Write Command **AT+QISERVER=<type>[,<max>]**	Response **OK** **ERROR** If configured as server successfully, return: **SERVER OK**

Quectel Confidential

	If configured as server unsuccessfully, return: **CONNECT FAIL**
Maximum Response Time	150s, determined by network.
Reference	

Parameter

<mode>	0	NOT configured as server
	1	Configured as server
<num>	The number of clients that have been connected in. The range is 0~5	
<type>	A numeric indicates the type of the server	
	0	TCP server
	1	UDP server
<max>	The maximum number of clients allowed to connect in. The default value is 1. The range is 1-5	

NOTES

1. Execution command configures the module as a TCP server and the maximum allowed client is 1.
2. The parameter **<max>** is excluded when **QIMUX** is 0.

11.19. AT+QICSGP Select CSD or GPRS as the Bearer

AT+QICSGP Select CSD or GPRS as the Bearer	
Test Command **AT+QICSGP=?**	Response **+QICSGP: 0-CSD,DIAL NUMBER,USER NAME,PASSWORD,RATE(0-3)** **+QICSGP: 1-GPRS,APN,USER NAME,PASSWORD** **OK**
Read Command **AT+QICSGP?**	Response **+QICSGP: <mode>** **OK**
Write Command **AT+QICSGP=<mode>[,(<apn>,<user name>,<password>)/(<dial number>,<user name>,<password>,<rate>)]**	Response **OK** **ERROR**

Quectel Confidential

Maximum Response Time	300ms
Reference	

Parameter

<mode> A numeric parameter which indicates the bearer type
- 0 Set CSD as the bearer for TCPIP connection
- 1 Set GPRS as the bearer for TCPIP connection

GPRS parameters:

<apn> A string parameter which indicates the access point name
<user name> A string parameter which indicates the user name
<password> A string parameter which indicates the password

CSD parameters:

<dial number> A string parameter which indicates the CSD dial numbers
<user name> A string parameter which indicates the CSD user name
<password> A string parameter which indicates the CSD password
<rate> A numeric parameter which indicates the CSD connection rate
- 0 2400
- 1 4800
- 2 9600
- 3 14400

NOTE

CSD configuration is not supported at present.

11.20. AT+QISRVC Choose Connection

AT+QISRVC Choose Connection	
Test Command **AT+QISRVC=?**	Response **+QISRVC**: (list of supported **<connection>**s) **OK**
Read Command **AT+QISRVC?**	Response **+QISRVC: <connection>** **OK**

Quectel Confidential

Write Command **AT+QISRVC=<connection>**	Response **OK** **ERROR**
Maximum Response Time	300ms
Reference	

Parameter

<connection>	A numeric parameter which indicates the chosen connection 1 Choose the connection in which MS used as a client 2 Choose the connection in which MS used as a server

NOTE

There could be two connections at one time: one connection is that MS connects with a remote server as a client; the other connection is that MS accepts a remote client as a server. Using this Command to specify which connection data will be sent through.

11.21. AT+QISHOWRA Set Whether or Not to Display the Address of Sender

AT+QISHOWRA Set Whether or Not to Display the Address of Sender	
Test Command **AT+QISHOWRA=?**	Response **+QISHOWRA:** (list of supported **<mode>**s) **OK**
Read Command **AT+QISHOWRA?**	Response **+QISHOWRA**: **<mode>** **OK**
Write Command **AT+QISHOWRA=<mode>**	Response **OK** **ERROR**
Maximum Response Time	300ms
Reference	

Quectel Confidential

Parameter

<mode>	A numeric parameter which indicates whether or not to show the address (including IP address in dotted decimal style of the remote end) when receiving data. 0 DO NOT show the address. Default 1 Show the address; the format to show the address is like: **RECV FROM: <IP ADDRESS>:<PORT>**

11.22. AT+QISCON Save TCPIP Application Context

AT+QISCON Save TCPIP Application Context	
Test Command **AT+QISCON=?**	Response **OK**
Read Command **AT+QISCON?**	Response TA returns TCPIP application context, which consists of the following AT command parameters. **SHOW APPTCPIP CONTEXT** **+QIDNSIP:<mode>** **+QIPROMPT:<sendprompt>** **+QIHEAD:<iphead>** **+QISHOWRA:<srip>** **+QICSGP:<csgp>** **Gprs Config APN:<apn>** **Gprs Config UserId:<gusr>** **Gprs Config Password:<gpwd>** **Gprs Config inactivityTimeout:<timeout>** **CSD Dial Number:<cnum>** **CSD Config UserId:<cusr>** **CSD Config Password:<cpwd>** **CSD Config rate:<crate>** **App Tcpip Mode:<mode>** **In Transparent Transfer Mode** **Number of Retry:<nmRetry>** **Wait Time:<waitTm>** **Send Size:<sendSz>** **esc:<esc>** **OK**
Execution Command **AT+QISCON**	Response **OK**
Maximum Response Time	300ms

Quectel Confidential

Reference	

Parameter

<mode>	See **AT+QIDNSIP**
<sendprompt>	See **AT+QIPROMPT**
<iphead>	See **AT+QIHEAD**
<srip>	See **AT+QISHOWRA**
<csgp>	See **AT+QICSGP**
<apn>	See **AT+QICSGP**
<gusr>	See **AT+QICSGP**
<gpwd>	See **AT+QICSGP**
<timeout>	See **AT+QICSGP**
<cnum>	See **AT+QICSGP**
<cusr>	See **AT+QICSGP**
<cpwd>	See **AT+QICSGP**
<crate>	See **AT+QICSGP**
The following four parameters are only for transparent transfer mode.	
<nmRetry>	See **AT+QITCFG**
<waitTm>	See **AT+QITCFG**
<sendSz>	See **AT+QITCFG**
<esc>	See **AT+QITCFG**

NOTES

1. The execution command TA saves TCPIP Application Context which consists of the following AT Command parameters, and when system is rebooted, the parameters will be loaded automatically: **AT+QIDNSIP**,**AT+QIPROMPT**,**AT+QIHEAD**,**AT+QISHOWRA**, **AT+QICSGP**, **AT+QITCFG**.
2. The execution command only save the corresponding parameters of the foreground context (refer to **AT+QIFGCNT**).
3. CSD configuration is not supported at present.

11.23. AT+QIMODE Select TCPIP Transfer Mode

AT+QIMODE Select TCPIP Transfer Mode	
Test Command **AT+QIMODE=?**	Response **+QIMODE:(0-NORMAL MODE,1-TRANSPARENT MODE)** **OK**

Read Command **AT+QIMODE?**	Response **+QIMODE: <mode>** **OK**
Write Command **AT+QIMODE=<mode>**	Response **OK** **ERROR**
Maximum Response Time	300ms
Reference	

Parameter

<mode>	0	Normal mode. In this mode, the data should be sent by the command **AT+QISEND**
	1	Transparent mode. In this mode, UART will enter data mode after TCP/UDP connection has been established. In data mode, all input data from UART will be sent to the remote end. **+++** can help to switch data mode to command mode. And then **ATO** can help to switch command mode to data mode.

11.24. AT+QITCFG Configure Transparent Transfer Mode

AT+QITCFG Configure Transparent Transfer Mode	
Test Command **AT+QITCFG=?**	Response **+QITCFG:** (list of supported **<NmRetry>**s),(list of supported **<WaitTm>**s),(list of supported **<SendSz>**s),(list of supported **<esc>**s) **OK**
Read Command **AT+QITCFG?**	Response **+QITCFG: <NmRetry>,<WaitTm>,<SendSz>,<esc>** **OK**
Write Command **AT+QITCFG=<NmRetry>,<WaitTm>,<SendSz>,<esc>**	Response **OK** **ERROR**
Maximum Response Time	300ms
Reference	

Quectel Confidential

Parameter

<NmRetry>	Number of times to retry to send an IP packet
<WaitTm>	Number of 100ms intervals to wait for serial input before sending the packet
<SendSz>	Size in bytes of data block to be received from serial port before sending
<esc>	Whether to turn on the escape sequence or not, default is TRUE

NOTES

1. **<WaitTm>** and **<SendSz>** are two conditions to send data packet.
2. Firstly, if the length of the input data from UART is greater than or equal to **<SendSz>**, the TCPIP stack will send the data by length **<SendSz>** to the remote.
3. Secondly, if the length of the input data from UART is less than **<SendSz>**, and the idle time keeps beyond the time defined by **<WaitTm>**, the TCPIP stack will send all the data in the buffer to the remote.
4. This command is invalid when **QIMUX** is 1.

11.25. AT+QISHOWPT Control Whether or Not to Show the Protocol Type

AT+QISHOWPT Control Whether or Not to Show the Protocol Type	
Test Command **AT+QISHOWPT=?**	Response **+QISHOWPT:** (list of supported **<mode>**s) **OK**
Read Command **AT+QISHOWPT?**	Response **+QISHOWPT: <mode>** **OK**
Write Command **AT+QISHOWPT=<mode>**	Response **OK** **ERROR**
Maximum Response Time	300ms
Reference	

Quectel Confidential

Parameter

<mode>	0	DO NOT show the transport protocol type at the end of header of the received TCP/UDP data
	1	Show the transport protocol type at the end of header of the received TCP/UDP data as the following format. IPD (data length)(TCP/UDP):

NOTE

This command is invalid if **QIHEAD** was set as 0 by the command **AT+QIHEAD=0**.

11.26. AT+QIMUX Control Whether or Not to Enable Multiple TCPIP Session

AT+QIMUX Control Whether or Not to Enable Multiple TCPIP Session	
Test Command **AT+QIMUX=?**	Response **+QIMUX:** (list of supported **<mode>**s) **OK**
Read Command **AT+QIMUX?**	Response **+QIMUX: <mode>** **OK**
Write Command **AT+QIMUX=<mode>**	Response **OK** **ERROR**
Maximum Response Time	300ms
Reference	

Parameter

<mode>	0	DO NOT enable multiple TCPIP session at the same time
	1	Enable multiple TCPIP session at the same time

Quectel Confidential

11.27. AT+QISHOWLA Control Whether or Not to Display Local IP Address

AT+QISHOWLA Control Whether or Not to Display Local IP Address	
Test Command **AT+QISHOWLA=?**	Response **+QISHOWLA:** (list of supported **<mode>**s) **OK**
Read Command **AT+QISHOWLA?**	Response **+QISHOWLA**: **<mode>** **OK**
Write Command **AT+QISHOWLA=<mode>**	Response **OK** **ERROR**
Maximum Response Time	300ms
Reference	

Parameter

<mode>	A numeric parameter indicates whether or not to show the destination address before receiving data. 0 DO NOT show the destination address 1 Show the destination address: **TO:<IP ADDRESS>**

NOTE

Because M66 can activate two GPRS contexts at the same time, i.e. M66 can get two local IP addresses. It is necessary to point out the destination of the received data when two GPRS contexts have been activated at the same time.

11.28. AT+QIFGCNT Select a Context as Foreground Context

AT+QIFGCNT Select a Context as Foreground Context	
Test Command **AT+QIFGCNT=?**	Response **+QIFGCNT:** (list of supported **<id>**s) **OK**

Quectel Confidential

Read Command **AT+QIFGCNT?**	Response **+QIFGCNT: <id>,<channel>** **OK**
Write Command **AT+QIFGCNT=<id>**	Response **OK** **ERROR**
Maximum Response Time	300ms
Reference	

Parameter

<id>	A numeric indicates which context will be set as foreground context. The range is 0-1	
<channel>	A numeric indicates which channel is controlling the context **<id>**	
	0	VIRTUAL_UART_1
	1	VIRTUAL_UART_2
	2	VIRTUAL_UART_3
	3	VIRTUAL_UART_4
	255	The context is not controlled by any channel

NOTE

When **CMUX** is opened, if the status of the context defined by **<id>** is not IP_INITIAL and the context is controlled by the other channel, it will return ERROR.

11.29. AT+QISACK Query the Data Information for Sending

AT+QISACK Query the Data Information for Sending	
Test Command **AT+QISACK=?**	Response **OK**
Execution Command **AT+QISACK**	Response **+QISACK**: **<sent>, <acked>, <nAcked>** **OK**
Write Command **AT+QISACK=<n>**	Response **+QISACK**: **<sent>, <acked>, <nAcked>** **OK**
Maximum Response Time	300ms

Quectel Confidential

Reference	

Parameter

<n>	The index for querying the connection
<sent>	A numeric indicates the total length of the data that has been sent through the session
<acked>	A numeric indicates the total length of the data that has been acknowledged by the remote
<nAcked>	A numeric indicates the total length of the data that has been sent but not acknowledged by the remote

NOTES

1. Write command is invalid when **QIMUX** was set as 0 by the command **AT+QIMUX=0**.
2. This command could be affected by the command **AT+QISRVC**. If the **QISRVC** was set as 1, this command is used to query the information of sending data during the session in which M66 serves as a client. If the **QISRVC** was set as 2, this command is used to query the data information for sending during the session in which M66 serves as a server.

11.30. AT+QINDI Set the Method to Handle Received TCP/IP Data

AT+QINDI Set the Method to Handle Received TCP/IP Data	
Test Command **AT+QINDI=?**	Response **+QINDI:** (list of supported **<m>**s) **OK**
Read Command **AT+QINDI?**	Response **+QINDI**: **<m>** **OK**
Write Command **AT+QINDI=<m>**	Response **OK** **ERROR**
Maximum Response Time	300ms
Reference	

Parameter

<m>	A numeric indicates how the mode handles the received data 0 Output the received data through UART directly. In the case, it probably includes

		header at the beginning of a received data packet. Please refer to the commands. **AT+QIHEAD**,**AT+QISHOWRA**, **AT+QISHOWPT**,**AT+QISHOWLA**
	1	Output a notification statement "**+QIRDI: <id>,<sc>,<sid>**" through UART. This statement will be displayed only one time until all the received data from the connection (defined by **<id>,<sc>,<sid>**) have been retrieved by the command **AT+QIRD.**
<id>	A numeric points out which context the connection for the received data is based on. Please refer to the parameter **<id>** in the command **AT+QIFGCNT**. The range is 0-1.	
<sc>	A numeric points out the role of M66 in the connection for the received data.	
	1	The module serves as the client of the connection
	2	The module serves as the server of the connection
<sid>	A numeric indicates the index of the connection for the received data. The range is 0-5 When QIMUX was set as 0 by the command **AT+QIMUX=0**, this parameter will be always 0.	

11.31. AT+QIRD Retrieve the Received TCP/IP Data

AT+QIRD Retrieve the Received TCP/IP Data	
Test Command **AT+QIRD=?**	Response **+QIRD:** (list of supported **<id>**s),(list of supported **<sc>**s),(list of supported **<sid>**s),(list of supported **<len>**s) **OK**
Write Command **AT+QIRD=<id>,<sc>,<sid>,<len>**	Response **[+QIRD: <ipAddr>:<port>,<type>,<length><CR><LF><data>]** **OK** **ERROR**
Maximum Response Time	300ms
Reference	

Parameter

<id>	A numeric points out which context the connection for the received data is based on. Please refer to the parameter **<id>** in the command **AT+QIFGCNT**. The range is 0-1	
<sc>	A numeric points out the role of M66 in the connection for the received data	
	1	The module serves as the client of the connection
	2	The module serves as the server of the connection
<sid>	A numeric indicates the index of the connection for the received data. The range is 0-5.	

Quectel Confidential

	When **QIMUX** was set as 0 by the command **AT+QIMUX=0**, this parameter will be always 0
<len>	The maximum length of data to be retrieved. The range is 1-1500
<ipAddr>	The address of the remote end. It is a dotted-decimal IP
<port>	The port of the remote end
<type>	An alpha string without quotation marks indicates the transport protocol type TCP the transport protocol is TCP UDP the transport protocol is UDP
<length>	The real length of the retrieved data
<data>	The retrieved data

NOTES

1. **<id>**, **<sc>** and **<sid>** are the same as the parameters in the statement "**+QIRDI: <id>,<sc>,<sid>**".
2. If it replies only OK for the write command, it means there is no received data in the buffer of the connection.

11.32. AT+QISDE Control Whether or Not to Echo the Data for QISEND

AT+QISDE Control Whether or Not to Echo the Data for QISEND	
Test Command **AT+QISDE=?**	Response **+QISDE:** (list of supported **<m>**s) **OK**
Read Command **AT+QISDE?**	Response **+QISDE**: **<m>** **OK**
Write Command **AT+QISDE=<m>**	Response **OK** **ERROR**
Maximum Response Time	300ms
Reference	

Parameter

<m>	A numeric indicates whether or not to echo the data for **AT+QISEND** 0 Do not echo the data 1 Echo the data

Quectel Confidential

11.33. AT+QPING Ping a Remote Server

AT+QPING Ping a Remote Server	
Test Command **AT+QPING=?**	Response **+QPING: "HOST"**,(list of supported **<timeout>**s),(list of supported **<pingnum>**s) **OK**
Write Command **AT+QPING=“<host>”[,[<timeout>][,<pingnum>]]**	Response **OK** **[+QPING: <result>[,<ipAddr>,<bytes>,<time>,<ttl>]<CR><LF> …]<CR><LF> +QPING:<finresult>[,<sent>,<rcvd>,<lost>,<min>,<max>,<avg>]** **ERROR**
Maximum Response Time	Depends on <timeout>.
Reference	

Parameter

<host>	The host address in string style. It could be a domain name or a dotted decimal IP address
<timeout>	A numeric gives the maximum time to wait for the response of each ping request. Unit: second. Range: 1-255. Default: 1
<pingnum>	A numeric indicates the maximum time of ping request. Range: 1-10. Default: 4
<result>	The result of each ping request 0 Received the ping response from the server. In the case, it is followed by “**,<ipAddr>,<bytes>,<time>,<ttl>**” 1 Timeout for the ping request. In the case, no other information follows it
<ipAddr>	The IP address of the remote server. It is a dotted decimal IP
<bytes>	The length of sending each ping request
<time>	The time expended to wait for the response for the ping request. Unit: ms
<ttl>	The value of time to live of the response packet for the ping request
<finresult>	The final result of the command 2 It is finished normally. It is successful to activate GPRS and find the host. In the case, it is followed by “**,<sent>,<rcvd>,<lost>,<min>,<max>,<avg>**” 3 The TCP/IP stack is busy now. In the case, no other information follows it 4 Do NOT find the host. In the case, no other information follows it 5 Failed to activate PDP context. In the case, no other information follows it

Quectel Confidential

<sent>	Total number of sending the ping requests
<rcvd>	Total number of the ping requests that received the response
<lost>	Total number of the ping requests that were timeout
<min>	The minimum response time. Unit: ms
<max>	The maximum response time. Unit: ms
<avg>	The average response time. Unit: ms

11.34. AT+QNTP Synchronize the Local Time Via NTP

AT+QNTP Synchronize the Local Time Via NTP	
Test Command **AT+QNTP=?**	Response **+QNTP: "SERVER",**(list of supported **<port>**s) **OK**
Read Command **AT+QNTP?**	Response **+QNTP: "<server>",<port>** **OK**
Execution Command **AT+QNTP**	Response **OK** **+QNTP: <result>**
Write Command **AT+QNTP="<server>"[,<port>]**	Response **OK** **+QNTP: <result>** **ERROR**
Maximum Response Time	120s, determined by network.
Reference	

Parameter

<server>	The address of the Time Server in string style. It could be a domain name or a dotted decimal IP address
<port>	The port of the Time Server
<result>	The result of time synchronization 0 Successfully synchronize the local time 1 Failed to synchronize the local time because of unknown reason 2 Failed to receive the response from the Time Server

Quectel Confidential

3	The TCP/IP stack is busy now
4	Do Not find the Time Server
5	Failed to activate PDP context

NOTE

The factory Time Server is the National Time Service Centre of China whose address is "210.72.145.44" and port is 123.

Quectel Confidential

12 Supplementary Service Commands

12.1. AT+CCFC Call Forwarding Number and Conditions Control

AT+CCFC Call Forwarding Number and Conditions Control	
Test Command **AT+CCFC=?**	Response **+CCFC:** (list of supported **<reads>**s) **OK**
Write Command **AT+CCFC=<reads>,<mode>[,<number>[,<type>[,<class>[,<subaddr>[,<satype>[,time]]]]]]**	Response TA controls the call forwarding supplementary service. Registration, erasure, activation, deactivation, and status query are supported. Only ,**<reads>** and **<mode>** should be entered with mode (0-2,4) If **<mode>**<>2 and command successful: **OK** If **<mode>**=2 and command successful (only in connection with **<reads>** 0 –3) For registered call forwarding numbers: **+CCFC: <status>, <class1>[, <number>, <type> [,<subaddr>,<satype>[,<time>]]] [<CR><LF>+CCFC: ....]** **OK** If no call forwarding numbers are registered (and therefore all classes are inactive): **+CCFC: <status>, <class>** **OK** where **<status>**=0 and **<class>**=15 If error is related to ME functionality: **+CME ERROR: <err>**

Quectel Confidential

Maximum Response Time	300ms
Reference GSM 07.07	

Parameter

<reads>	0	Unconditional
	1	Mobile busy
	2	No reply
	3	Not reachable
	4	All call forwarding (0-3)
	5	All conditional call forwarding (1-3)
<mode>	0	Disable
	1	Enable
	2	Query status
	3	Registration
	4	Erasure
<number>	Phone number in string type of forwarding address in format specified by **<type>**	
<type>	Type of address in integer format; default value is 145 when dialing string includes international access code character "**+**", otherwise 129	
<subaddr>	String type sub-address of format specified by **<satype>**	
<satype>	Type of sub-address in integer	
<class>	1	Voice
	2	Data
	4	FAX
	7	All telephony except SMS
	8	Short message service
	16	Data circuit sync
	32	Data circuit async
<time>	1…30	When "no reply" (**<reads>**=no reply) is enabled or queried, this gives the time in seconds to wait before call is forwarded, default value is 20
<status>	0	Not active
	1	Active

Example

```
AT+CCFC=0,3,"15021012496"          //Register the destination number for unconditional call
                                     forwarding (CFU)
OK
AT+CCFC=0,2                        //Query the status of CFU without specifying <class>
+CCFC: 1,1,"+8615021012496",145

+CCFC: 1,4,"+8615021012496",145
```

Quectel Confidential

```
+CCFC: 1,32,"+8615021012496",145

+CCFC: 1,16,"+8615021012496",145

OK
AT+CCFC=0,4                    //Erase the registered CFU destination number
OK
AT+CCFC=0,2                    //Query the status, no destination number
+CCFC: 0,7

OK
```

12.2. AT+CCUG Closed User Group Control

AT+CCUG Closed User Group Control	
Test Command **AT+CCUG=?**	Response **OK**
Read Command **AT+CCUG?**	Response **+CCUG: <n>,<index>,<info>** **OK**
Write Command **AT+CCUG=[<n>][,<index>[,<info>]]**	Response TA sets the closed user group supplementary service parameters as a default adjustment for all following calls. **OK** If error is related to ME functionality: **+CME ERROR: <err>**
Maximum Response Time	300ms
Reference GSM 07.07	

Parameter

<n>	0	Disable CUG
	1	Enable CUG
<index>	0...9	CUG index
	10	No index (preferred CUG taken from subscriber data)
<info>	0	Bo information
	1	Suppress OA (Outgoing Access)

Quectel Confidential

	2	Suppress preferential CUG
	3	Suppress OA and preferential CUG

12.3. AT+CCWA Call Waiting Control

AT+CCWA Call Waiting Control	
Test Command **AT+CCWA=?**	Response **+CCWA:** (list of supported **<n>**s) **OK**
Read Command **AT+CCWA?**	Response **+CCWA: <n>** **OK**
Write Command **AT+CCWA=[<n>][,<mode>[,<class>]]**	Response TA controls the call waiting supplementary service. Activation, deactivation and status query are supported. If **<mode>**<>2 and command successful: **OK** If **<mode>**=2 and command successful: **+CCWA:<status>,<class1>[<CR><LF>+CCWA:<status>,<class2>[...]]** **OK** If error is related to ME functionality: **+CME ERROR: <err>**
Maximum Response Time	300ms
Reference GSM 07.07	

Parameter

<n>	0	Disable presentation of an unsolicited result code
	1	Enable presentation of an unsolicited result code
<mode>	When **<mode>** parameter is not given, network is not interrogated	
	0	Disable
	1	Enable
	2	Query status

Quectel Confidential

<class>	A sum of integers, each integer represents a class of information	
	1	Voice (telephony)
	2	Data (bearer service)
	4	FAX(facsimile)
	16	Data circuit sync
	32	Data circuit async
<status>	0	Disable
	1	Enable

NOTES

1. **<status>**=0 should be returned only if service is not active for any **<class>** i.e. **+CCWA: 0, 7** will be returned in this case.
2. When **<mode>**=2, all active call waiting classes will be reported. In this mode the command is available by pressing any key.
3. Unsolicited result code
   When the presentation call waiting at the TA is enabled (and call waiting is enabled) and a terminating call set up during an established call, an unsolicited result code is returned:
   +CCWA: <number>,<type>,<class>[,<alpha>]
   Parameters

<number>	Phone number in string type of calling address in format specified by **<type>**	
<type>	Type of address octet in integer format	
	129	Unknown type (IDSN format number)
	145	International number type (ISDN format)
<alpha>	Optional string type alphanumeric representation of **<number>** corresponding to the entry found in phone book	

Example

```
AT+CCWA=1,1                          //Enable presentation of an unsolicited result code
OK
ATD10086;                            //Establish a call
OK

+CCWA: "02154450293",129,1           //Indication of a call that has been waiting
```

12.4. AT+CHLD Call Hold and Multiparty

AT+CHLD Call Hold and Multiparty	
Test Command	Response
AT+CHLD=?	**+CHLD:** (list of supported **<n>**s)

	OK
Write Command **AT+CHLD=[<n>]**	Response TA controls the supplementary services call hold, multiparty and explicit call transfer. Calls can be put on hold, recovered, released, added to conversation and transferred. **OK** If error is related to ME functionality: **+CME ERROR: <err>**
Maximum Response Time	300ms
Reference GSM 07.07	

Parameter

<n>	0	Terminate all held calls or UDUB (User Determined User Busy) for a waiting call. If a call is waiting, terminate the waiting call. Otherwise, terminate all held calls (if any)
	1	Terminate all active calls (if any) and accept the other call (waiting call or held call). It cannot terminate active call if there is only one call
	1X	Terminate the specific call number X (X=1-7)(active, waiting or held)
	2	Place all active calls on hold (if any) and accept the other call (waiting call or held call) as the active call
	2X	Place all active calls except call X (X=1-7) on hold
	3	Add the held call to the active calls

NOTE

These supplementary services are only available to the teleservice 11 (Speech: Telephony).

Example

```
ATD10086;                                  //Establish a call
OK

+CCWA: "02154450293",129,1                 //Indication of a call that has been waiting
AT+CHLD=2                                  //Place the active call on hold and accept the waiting call as
                                             the active call
OK
AT+CLCC
+CLCC: 1,0,1,0,0,"10086",129,""            //The first call on hold
```

Quectel Confidential

```
+CLCC: 2,1,0,0,0,"02154450293",129,""      //The second call becomes active

OK
AT+CHLD=21                                 //Place the active call except call X=1 on hold
OK
AT+CLCC
+CLCC: 1,0,0,0,0,"10086",129,""            //The first call becomes active

+CLCC: 2,1,1,0,1,"02154450293",129,""      //The second call on hold

OK
AT+CHLD=3                                  //Add a held call to the active calls in order to set up a
                                             conference (multiparty) call
OK
AT+CLCC
+CLCC: 1,0,0,0,1,"10086",129,""

+CLCC: 2,1,0,0,1,"02154450293",129,""

OK
```

12.5. AT+CLIP Calling Line Identification Presentation

AT+CLIP Calling Line Identification Presentation	
Test Command **AT+CLIP=?**	Response **+CLIP:** (list of supported **<n>**s) **OK**
Read Command **AT+CLIP?**	Response **+CLIP: <n>,<m>** **OK**
Write Command **AT+CLIP=[<n>]**	Response TA enables or disables the presentation of the calling line identity (CLI) at the TE. It has no effect on the execution of the supplementary service CLIP in the network. **OK** If error is related to ME functionality: **+CME ERROR: <err>**

Quectel Confidential

Maximum Response Time	15s, determined by network.
Reference GSM 07.07	

Parameter

<n>	0	Suppress unsolicited result codes
	1	Display unsolicited result codes
<m>	0	CLIP not provisioned
	1	CLIP provisioned
	2	Unknown

NOTE

Unsolicited result code

When the presentation of the CLI at the TE is enabled (and calling subscriber allows), an unsolicited result code is returned after every RING (or **+CRING: <type>**) at a mobile terminating call.

+CLIP: <number>, <type>,"",,<alphaId>,<CLI validity>

Parameters

<number>	Phone number in string type of calling address in format specified by **<type>**	
<type>	Type of address octet in integer format;	
	129	Unknown type (IDSN format number)
	145	International number type (ISDN format)
<alphaId>	String type alphanumeric representation of **<number>** corresponding to the entry found in phone book	
<CLI validity>	0	CLI valid
	1	CLI has been withheld by the originator
	2	CLI is not available due to interworking problems or limitations of originating network

Example

```
AT+CPBW=1,"02151082965",129,"QUECTEL"
OK
AT+CLIP=1
OK

RING

+CLIP: "02151082965",129,"",,"",0
```

Quectel Confidential

12.6. AT+QCLIP Control Whether or Not to Show the Name of Incoming Call Number

AT+QCLIP	Control Whether or Not to Show the Name of Incoming Call Number
Test Command **AT+QCLIP=?**	Response **+QCLIP:** (list of supported **<n>**s) **OK**
Read Command **AT+QCLIP?**	Response **+QCLIP: <n>** **OK**
Write Command **AT+QCLIP=<n>**	Response **OK** If error is related to ME functionality: **+CME ERROR: <err>**
Maximum Response Time	300ms
Reference	

Parameter

<n>	Enable or disable the function of show the name of incoming call number	
	0	Enable
	1	Disable

NOTE

This AT command should be used in conjunction with **CLIP** command.

Example

```
AT+CPBW=1,"02151082965",129,"QUECTEL"
OK
AT+QCLIP=1
OK
AT+CLIP=1
OK
```

Quectel Confidential

RING **+CLIP: "02151082965",129,"",,"QUECTEL",0**

12.7. AT+CLIR Calling Line Identification Restriction

AT+CLIR Calling Line Identification Restriction	
Test Command **AT+CLIR=?**	Response **+CLIR:** (list of supported **<n>**s) **OK**
Read Command **AT+CLIR?**	Response **+CLIR: <n>,<m>** **OK**
Write Command **AT+CLIR=[<n>]**	Response TA restricts or enables the presentation of the calling line identity (CLI) to the called party when originating a call. The command overrides the CLIR subscription (default is restricted or allowed) when temporary mode is provisioned as a default adjustment for all following outgoing calls. This adjustment can be revoked by using the opposite Command. **OK** If error is related to ME functionality: **+CME ERROR: <err>**
Maximum Response Time	15s, determined by network
Reference GSM 07.07	

Parameter

<n>	(Parameter sets the adjustment for outgoing calls)	
	0	presentation indicator is used according to the subscription of the CLIR service
	1	CLIR invocation
	2	CLIR suppression
<m>	(Parameter shows the subscriber CLIR service status in the network)	
	0	CLIR not provisioned
	1	CLIR provisioned in permanent mode
	2	Unknown (e.g. no network, etc.)
	3	CLIR temporary mode presentation restricted

Quectel Confidential

4	CLIR temporary mode presentation allowed

12.8. AT+COLP Connected Line Identification Presentation

AT+COLP Connected Line Identification Presentation	
Test Command **AT+COLP=?**	Response **+COLP:** (list of supported **<n>**s) **OK**
Read Command **AT+COLP?**	Response **+COLP: <n>,<m>** **OK**
Write Command **AT+COLP=[<n>]**	Response TA enables or disables the presentation of the COL (Connected Line) at the TE for a mobile originating a call. It has no effect on the execution of the supplementary service COLR in the network. Intermediate result code is returned from TA to TE before any +CR or V.25ter responses. **OK**
Maximum Response Time	15s, determined by network.
Reference GSM 07.07	

Parameter

<n>	(Parameter sets/shows the result code presentation status in the TA)	
	0	Disable
	1	Enable
<m>	(Parameter shows the subscriber COLP service status in the network)	
	0	COLP not provisioned
	1	COLP provisioned
	2	Unknown (e.g. no network, etc.)

Quectel Confidential

NOTE

Intermediate result code
When enabled (and called subscriber allows), an intermediate result code is returned before any +CR or V.25ter responses:
+COLP: <number>,<type>[,<subaddr>,<satype> [,<alpha>]]
Parameters
<number> Phone number in string type, format specified by **<type>**
<type> Type of address octet in integer format
129 Unknown type (IDSN format number)
145 International number type (ISDN format)
<subaddr> String type sub-address of format specified by **<satype>**
<satype> Type of sub-address octet in integer format (refer to GSM 04.08 sub clause 10.5.4.8)
<alpha> Optional string type alphanumeric representation of **<number>** corresponding to the entry found in phone book

Example

```
AT+CPBW=1,"02151082965",129,"QUECTEL"
OK
AT+COLP=1
OK
ATD02151082965;
+COLP: "02151082965",129,"",0,""

OK
```

12.9. AT+QCOLP Show Alpha Field in +COLP String

AT+QCOLP Show Alpha Field in +COLP String	
Test Command **AT+QCOLP=?**	Response **+QCOLP:** (list of supported **<mode>**s) **OK**
Read Command **AT+QCOLP?**	Response **+QCOLP: <mode>** **OK**
Write Command **AT+QCOLP=<mode>**	Response **OK**

Quectel Confidential

	If error is related to ME functionality: **+CME ERROR: <err>**
Maximum Response Time	300ms
Reference	

Parameter

<mode>	Whether or not to show alpha field in **+COLP** string	
	0	NOT show alpha field in **+COLP** string
	1	Show alpha field in **+COLP** string

NOTE

This command setting only works under **AT+COLP=1**.

Example

```
AT+CPBW=1,"02151082965",129,"QUECTEL"
OK
AT+QCOLP=1
OK
AT+COLP=1
OK
ATD02151082965;
+COLP: "02151082965",129,"",0,"QUECTEL"

OK
```

12.10. AT+CUSD Unstructured Supplementary Service Data

AT+CUSD Unstructured Supplementary Service Data	
Test Command **AT+CUSD=?**	Response **+CUSD:** (list of supported **<n>**s) **OK**
Read Command **AT+CUSD?**	Response **+CUSD: <n>** **OK**

Quectel Confidential

Write Command **AT+CUSD=[<n>[,<str>[,<dcs>]]**	Response **OK** If error is related to ME functionality: **+CME ERROR: <err>**
Maximum Response Time	120s, determined by network.
Reference GSM 07.07	

Parameter

<n>	A numeric parameter which indicates control of the unstructured supplementary service data 0 Disable the result code presentation in the TA 1 Enable the result code presentation in the TA 2 Cancel session (not applicable to read command response)
<str>	String type USSD-string
<dcs>	Cell Broadcast Data Coding Scheme in integer format (default 0)

Example

```
AT+CSCS="UCS2"
OK
AT+CUSD=1,"002A0031003000300023"
+CUSD:
1,"0031002E59296C14000A0032002E65B095FB000A0033002E8BC15238000A0034002E5F6979680
00A0035002E751F6D3B000A0036002E5A314E50000A0037002E5E385DDE98CE91C7000A002A002
E900051FA000A", 72

OK
```

12.11. AT+CSSN Supplementary Services Notification

AT+CSSN Supplementary Services Notification	
Test Command **AT+CSSN=?**	Response **+CSSN:** (list of supported **<n>**s), (list of supported **<m>**s) **OK**
Read Command **AT+CSSN?**	Response **+CSSN: <n>,<m>**

Quectel Confidential

	OK
Write Command **AT+CSSN=[<n>[,<m>]]**	Response **OK** If error is related to ME functionality: **+CME ERROR: <err>**
Maximum Response Time	300ms
Reference GSM 07.07	

Parameter

<n>	A numeric parameter which indicates whether to show the **+CSSI:<code1>[,<index>]** result code presentation status after a mobile originated call setup	
	0	Disable
	1	Enable
<m>	A numeric parameter which indicates whether to show the **+CSSU:<code2>** result code presentation status during a mobile terminated call setup or during a call, or when a forward check supplementary service notification is received	
	0	Disable
	1	Enable
<code1>	0	Unconditional call forwarding is active
	1	Some of the conditional call forwarding are active
	2	Call has been forwarded
	3	Call is waiting
	4	This is a CUG call (also **<index>** present)
	5	Outgoing calls are barred
	6	Incoming calls are barred
	7	CLIR suppression rejected
<index>	Closed user group index	
<code2>	0	This is a forwarded call

Quectel Confidential

13 Audio Commands

13.1. ATL Set Monitor Speaker Loudness

ATL Set Monitor Speaker Loudness	
Execution Command **ATL<value>**	Response **OK**
Maximum Response Time	300ms
Reference V.25ter	

Parameter

<value>	0	Low speaker volume
	1	Low speaker volume
	2	Medium speaker volume
	3	High speaker volume

NOTE

The two commands **ATL** and **ATM** are implemented only for V.25 compatibility reasons and have no effect.

13.2. ATM Set Monitor Speaker Mode

ATM Set Monitor Speaker Mode	
Execution Command **ATM<value>**	Response **OK**
Maximum Response Time	300ms
Reference V.25ter	

Quectel Confidential

Parameter

<value>	0	Speaker is always off
	1	Speaker is on until TA inform TE that carrier has been detected
	2	Speaker is always on when TA is off-hook

NOTE

The two commands **ATL** and **ATM** are implemented only for V.25 compatibility reasons and have no effect.

13.3. AT+VTD Tone Duration

AT+VTD Tone Duration	
Test Command **AT+VTD=?**	Response **+VTD:** (list of supported **<internalduration>**s)[,(list of supported **<duration>**s)] **OK**
Read Command **AT+VTD?**	Response **+VTD: <internalduration>,<duration>** **OK**
Write Command **AT+VTD=<internalduration>[,<duration>]**	Response This command refers to an integer **<internalduration>** that defines the length of tones emitted as a result of the **+VTS** command. This does not affect the D command. **OK**
Maximum Response Time	300ms
Reference GSM 07.07	

Parameter

<internalduration>	1-255	Duration between two tones, unit is 100ms
<duration>	0	Do not set duration of every single tone.
	1-100000	Duration of every single tone , unit is 1ms

Quectel Confidential

13.4. AT+VTS DTMF and Tone Generation

AT+VTS DTMF and Tone Generation	
Test Command **AT+VTS=?**	Response **+VTS:** (list of supported **<dtmf>**s), ,(list of supported **<duration>**s) **OK**
Write Command **AT+VTS=<dtmf-string>**	Response This command allows the transmission of DTMF tones and arbitrary tones in voice mode. These tones may be used (for example) when announcing the start of a recording period. **OK** If error is related to ME functionality: **+CME ERROR: <err>**
Maximum Response Time	Depends on the length of **<dtmf-string>**.
Reference GSM 07.07	

Parameter

<dtmf-string>	It has a max length of 20 characters, must be entered between double quotes (" ") and consists of combinations of the following separated by commas. But a single character does not require quotes 1) **<dtmf>** A single ASCII characters in the set 0-9, #,*, A-D. This is interpreted as a sequence of DTMF tones whose duration is set by the **+VTD** command 2) **{<dtmf>, <duration>}** This is interpreted as a DTMF tone whose duration is determined by **<duration>**
<duration>	Duration of the tone, unit: 100ms, range: 1-255

Example

```
ATD10086;                    //Establish a call
OK
AT+VTS=1                     //Send a single DTMF tone according to the prompts of voice
OK
```

Quectel Confidential

13.5. AT+CALM Alert Sound Mode

AT+CALM Alert Sound Mode	
Test Command **AT+CALM=?**	Response **+CALM:** (list of supported **<mode>**s) **OK**
Read Command **AT+CALM?**	Response **+CALM: <mode>** **OK**
Write Command **AT+CALM=<mode>**	Response **OK** If error is related to ME functionality: **+CME ERROR: <err>**
Maximum Response Time	300ms
Reference GSM 07.07	

Parameter

<mode>	0	Normal mode
	1	Silent mode (all sounds from ME are prevented)

13.6. AT+CRSL Ringer Sound Level

AT+CRSL Ringer Sound Level	
Test Command **AT+CRSL=?**	Response **+CRSL:** (list of supported **<level>**s) **OK**
Read Command **AT+CRSL?**	Response **+CRSL: <level>** **OK**
Write Command **AT+CRSL=<level>**	Response **OK**

Quectel Confidential

	If error is related to ME functionality: **+CME ERROR: <err>**
Maximum Response Time	300ms
Reference GSM 07.07	

Parameter

<level>	Integer type value (0-100) with manufacturer specific range (Smallest value represents the lowest sound level)

13.7. AT+CLVL Loud Speaker Volume Level

AT+CLVL Loud Speaker Volume Level	
Test Command **AT+CLVL=?**	Response **+CLVL:** (list of supported **<level>**s) **OK**
Read Command **AT+CLVL?**	Response **+CLVL: <level>** **OK**
Write Command **AT+CLVL=<level>**	Response **OK** If error is related to ME functionality: **+CME ERROR: <err>**
Maximum Response Time	300ms
Reference GSM 07.07	

Parameter

<level>	Integer type value (0-100) with manufacturer specific range (Smallest value represents the lowest sound level)

Quectel Confidential

13.8. AT+CMUT Mute Control

AT+CMUT Mute Control	
Test Command **AT+CMUT=?**	Response **+CMUT:** (list of supported **<n>**s) **OK**
Read Command **AT+CMUT?**	Response **+CMUT: <n>** **OK**
Write Command **AT+CMUT=<n>**	Response **OK** If error is related to ME functionality: **+CME ERROR: <err>**
Maximum Response Time	300ms
Reference GSM 07.07	

Parameter

<n>	0	Mute off
	1	Mute on

13.9. AT+QSIDET Change the Side Tone Gain Level

AT+QSIDET Change the Side Tone Gain Level	
Test Command **AT+QSIDET=?**	Response **+QSIDET:** (list of supported **<gainlevel>**s) **OK**
Read Command **AT+QSIDET?**	Response **+QSIDET(NORMAL_AUDIO): <gainlevel>** **OK** **+QSIDET(HEADSET_AUDIO): <gainlevel>** **OK**

Quectel Confidential

Write Command **AT+QSIDET=<gainlevel>**	Response **OK** If error is related to ME functionality: **+CME ERROR: <err>**
Maximum Response Time	300ms
Reference GSM 07.07	

Parameter

<gainlevel>	Range is 0-255

NOTE

<gainlevel> value is related to specific channel.

13.10. AT+QMIC Change the Microphone Gain Level

AT+QMIC Change the Microphone Gain Level	
Test Command **AT+QMIC=?**	Response **+QMIC:** (list of supported **<channel>**s), (list of supported **<gainlevel>**s) **OK**
Read Command **AT+QMIC?**	Response **+QMIC:** **<gainlevel(Normal_Mic)>,<gainlevel(Headset_Mic)>,<gainlevel(Loudspeaker_Mic)>** **OK**
Write Command **AT+QMIC=<channel>,<gainlevel>**	Response **OK** If error is related to ME functionality: **+CME ERROR: <err>**
Maximum Response Time	300ms
Reference	

Quectel Confidential

Parameter

<channel>	0	Normal microphone
	1	Headset microphone
	2	Loudspeaker microphone
<gainlevel>	Range is 0-15	

13.11. AT+QLDTMF Generate Local DTMF Tones

AT+QLDTMF Generate Local DTMF Tones	
Test Command **AT+QLDTMF=?**	Response **+QLDTMF:** (list of supported **<n>**s), (list of supported **<DTMF-string>**s) **OK**
Write Command **AT+QLDTMF=<n>[,<DTMF string>]**	Response **OK** If error is related to ME functionality: **+CME ERROR: <err>**
Execution Command **AT+QLDTMF**	Response **OK**
Maximum Response Time	Depends on the length of **<DTMF string>**.
Reference	

Parameter

<n>	A numeric parameter(1-1000) which indicates the duration of all DTMF tones in **<DTMF -string>** in 1/10 seconds
<DTMF-string>	A string parameter which has a max length of 20 DTMF characters (single ASCII chars in the set 0-9,#,*,A-D), separated by commas

NOTE

Aborts any DTMF tones that are generated currently and any DTMF tones sequence.

Quectel Confidential

13.12. AT+QAUDCH Swap the Audio Channels

AT+QAUDCH Swap the Audio Channels	
Test Command **AT+QAUDCH=?**	Response **+QAUDCH:** (list of supported **<n>**s) **OK**
Read Command **AT+QAUDCH?**	Response **+QAUDCH: <n>** **OK**
Write Command **AT+QAUDCH=[<n>]**	Response **OK** If error is related to ME functionality: **+CME ERROR: <err>**
Maximum Response Time	300ms
Reference	

Parameter

<n>	0	Normal audio channel (default)
	1	Headset audio channel
	2	Loudspeaker audio

13.13. AT+QAUDLOOP Audio Channel Loop Back Test

AT+QAUDLOOP Audio Channel Loop Back Test	
Test Command **AT+QAUDLOOP=?**	Response **+QAUDLOOP:** (list of supported **<state>**s),(list of supported **<type>**s) **OK**
Write Command **AT+QAUDLOOP=<state>[,<type>]**	Response **OK** If error is related to ME functionality: **+CME ERROR: <err>**

Quectel Confidential

Maximum Response Time	300ms
Reference	

Parameter

<state>	0	Test is off
	1	Test is on
<type>	0	Normal audio channel
	1	Headset audio channel
	2	Loudspeaker audio channel

13.14. AT+QLTONE Generate Local Specific Tone

AT+QLTONE Generate Local Specific Tone	
Test Command **AT+QLTONE=?**	Response **+QLTONE:** (list of supported **<mode>**s), (list of supported **<frequency>**s), (list of supported **<periodOn>**s), (list of supported **<periodOff>**s), (list of supported **<duration>**s) **OK**
Write Command **AT+QLTONE=<mode>,<frequency>,<periodOn>,<periodOff>,<duration>**	Response **OK** If error is related to ME functionality: **+CME ERROR: <err>**
Maximum Response Time	Depends on the content of the play.
Reference	

Parameter

<mode>	0	Stop playing tone
	1	Start playing tone
<frequency>	The frequency of tone to be generated	
<periodOn>	The period of generating tone	
<periodOff>	The period of stopping tone	
<duration>	Duration of tones in milliseconds	

Quectel Confidential

NOTE

When playing tone, module will continuously play for **<periodOn>**, then stop playing for **<periodOff>** in a cycle. The total time of cycles is **<duration>**.

13.15. AT+QTONEP Set DTMF Output Path

AT+QTONEP Set DTMF Output Path	
Test Command **AT+QTONEP=?**	Response **+QTONEP:** (list of supported **<outputpath>**s) **OK**
Read Command **AT+QTONEP?**	Response **+QTONEP: <outputpath>** **OK**
Write Command **AT+QTONEP=<outputpath>**	Response **OK** If error is related to ME functionality: **+CME ERROR: <err>**
Maximum Response Time	300ms
Reference	

Parameter

<outputpath>	Output path	
	0	Output DTMF or tone from Normal speaker
	1	Output DTMF or tone from Headset speaker
	2	Output DTMF or tone from Loud speaker
	3	Auto

NOTE

Set **AT+QTONEP=3**, output DTMF or tone from default speak path. For more details, consult **AT+QAUDCH**.

Quectel Confidential

13.16. AT+QTDMOD Set Tone Detection Mode

AT+QTDMOD Set Tone Detection Mode	
Test Command **AT+QTDMOD=?**	Response **+QTDMOD:** (list of supported **<operatefuntion>**s),(list of supported **<funtionstatus>**s) **OK**
Read Command **AT+QTDMOD?**	Response **+QTDMOD: <operatefuntion>,<funtionstatus>** **OK**
Write Command **AT+QTDMOD=<operatefuntion>,<funtionstatus>**	Response **OK** If error is related to ME functionality: **+CME ERROR: <err>**
Maximum Response Time	300ms
Reference	

Parameter

<operatefuntion> Operate function

1	Set detection range
2	Set detection mode

<funtionstatus> Function status

0	When set **<operatefuntion>**=1, detect all DTMF, including 1400Hz and 2300Hz handshake signal. When set **<operatefuntion>**=2, detect DTMF tone by normal arithmetic
1	When set **<operatefuntion>**=1, only detect 1400Hz and 2300Hz handshake signal by using optimal arithmetic. When set **<operatefuntion>**=2, detect long continuous DTMF tone by using optimal arithmetic

NOTES

1. Set **AT+QTDMOD=1,0**, detect all DTMF, including 1400Hz and 2300Hz handshake signal.
2. Set **AT+QTDMOD=1,1**, only detect 1400Hz and 2300Hz handshake signal by using optimal arithmetic.
3. Set **AT+QTDMOD=2,0**, detect DTMF tone by using normal arithmetic.
4. Set **AT+QTDMOD=2,1**, detect long continuous DTMF tone by using optimal arithmetic.
5. Consult **AT+QTONEDET**.

Quectel Confidential

13.17. AT+QTONEDET Detect DTMF

AT+QTONEDET Detect DTMF	
Test Command **AT+QTONEDET=?**	Response **+QTONEDET:** (list of supported **<mode>**s) **OK**
Read Command **AT+QTONEDET?**	Response **+QTONEDET: <mode>** **OK**
Write Command **AT+QTONEDET=<mode>[,<operate >][,<prefixpause>][,<lowthreshold>][,<highthreshold>]**	Response **OK** If error is related to ME functionality: **+CME ERROR: <err>** Open after successful DTMF tone is detected, report: **+QTONEDET: <dtmfcode>[,< persistencetime>]**
Maximum Response Time	300ms
Reference	

Parameter

<mode>	Mode function	
	0	Close tone detection
	1	Open tone detection
	2	Configure 1400Hz or 2300Hz detection threshold, duration of which is 100ms
	3	Configure 1400Hz and 2300Hz 400ms detection threshold
	4	Configure DTMF detection threshold
	5	Open debug
<operate>	Operate value	
	When **<mode>**=2, **<operate>** set as follows	
	0	Query threshold values, these values are 1400Hz and 2300Hz detection threshold, each duration of which is 100ms
	1	Set threshold values, these values are 1400Hz and 2300Hz 100ms detection threshold
	When **<mode>**=3, **<operate>** set as follows	
	0	Query threshold values, these values are 1400Hz and 2300Hz 400ms detect threshold
	1	Set threshold values, these values are 1400Hz and 2300Hz 400ms detect

Quectel Confidential

threshold.

When **<mode>**=4, **<operate>** set as follows

0 Query threshold values, these values are detection threshold

1 Set threshold values, these values are DTMF detection threshold

When **<mode>**=5, **<param1>** set as follows

0 Working status, default value, report **+QTONEDET: x,x,** please refer to Note3

1 Debug status, only report **+QTONEDTD:x,x,…** debug information (refer to Note 2)

2 Debug status and working status, report **+QTONEDTD: x,x,…** debug information (refer to Note 2) and **+QTONEDET:x,x,** please refer to Note 3

<prefixpause> Prefix pause number

<lowthreshold> Low threshold value

<highthreshold> High threshold value

<dtmfcode> DTMF tone code corresponding ASSCII

48 DTMF 0

49 DTMF 1

50 DTMF 2

51 DTMF 3

52 DTMF 4

53 DTMF 5

54 DTMF 6

55 DTMF 7

56 DTMF 8

57 DTMF 9

65 DTMF A

66 DTMF B

67 DTMF C

68 DTMF D

42 DTMF *

35 DTMF #

69 1400Hz frequency

70 2300Hz frequency

<persistencetime>

100 100ms of the tone is detected, only 1400Hz and 2300 Hz

400 400ms of the tone is detected, only 1400Hz and 2300 Hz

NOTES

1. Available during voice call.
2. If the duration of DTMF tone is within the value range of low and high threshold value, it is effective. Unit is 20ms.
3. When in debug mode, report **+QTONEDTD: <dtmfcode>,<weak>,,<pause_f7>, <pause_dtmf>,<pause_unkown>,<framecnt>**.

Quectel Confidential

4. When report as follows:
   +QTONEDET: 50 Detected DTMF 2
   +QTONEDET: 69,100 Detected 100ms of 1400Hz
   +QTONEDET: 70,100 Detected 100ms of 2300Hz
   +QTONEDET: 69,400 Detected 400ms of 1400Hz
   +QTONEDET: 70,400 Detected 400ms of 2300Hz
5. Consult **AT+QTDMOD**.

13.18. AT+QWDTMF Play DTMF Tone During the Call

AT+QWDTMF Play DTMF Tone During the Call	
Test Command **AT+QWDTMF=?**	Response **+QWDTMF:** (list of supported **<ul_volume>**s),(list of supported**<dl_volume>**s),(**"<dtmfcode>,<continuancetime>,<mutetime>"**),(list of supported **<channel>**s),(list of supported **<mode>**s) **OK**
Write Command **AT+QWDTMF=<ul_volume>,<dl_volume>,("<dtmfcode>,<continuancetime>,<mutetime>")[,<channel>][,<mode>]**	Response If success is related to ME functionality: **+QWDTMF: 5** **OK** If fail is related to ME functionality: **+QWDTMF: <playcode>** **OK** If error is related to ME functionality: **+CME ERROR: <err>**
Maximum Response Time	Depends on the content of the play.
Reference	

Parameter

<ul_volume>	0-7, uplink channel of the volume
<dl_volume>	0-7, downlink channel of the volume, recommended to be set as 0
<dtmfcode>	The DTMF tone strings '0' DTMF 0

Quectel Confidential

	'1'	DTMF 1
	'2'	DTMF 2
	'3'	DTMF 3
	'4'	DTMF 4
	'5'	DTMF 5
	'6'	DTMF 6
	'7'	DTMF 7
	'8'	DTMF 8
	'9'	DTMF 9
	'A'	DTMF A
	'B'	DTMF B
	'C'	DTMF C
	'D'	DTMF D
	'*'	DTMF *
	'#'	DTMF #
	'E'	Frequency of 1400Hz
	'F'	Frequency of 2300Hz
	'G'	Frequency of 1KHz
<continuancetime>	Duration of each DTMF tone, unit is ms	
<mutetime>	Mute time, unit is ms	
<channel>	0	Normal audio channel
	1	Headset audio channel
	2	Loudspeaker audio
<mode>	0	Algorithm 1 (Default)
	1	Algorithm 2
<playcode>	Indicate status of sending DTMF If <playcode> is 5, it means sending DTMF successfully If <playcode> is not 5, it means sending DTMF unsuccessfully	

NOTES

1. **AT+QWDTMF=7,0,"0A5,50,50,1,55,50,23,100,50"**
   Send DTMF '0' for 50ms, mute 50ms; send DTMF 'A' for 50ms, mute 50ms; send DTMF '5' for 50ms, mute 50ms; send DTMF '1' for 55ms, mute 50ms; send DTMF '2' for 100ms, mute 50ms; send DTMF '3' for 100ms, mute 50ms.
2. **<channel>** is available for non-call.

Quectel Confidential

14 Hardware Related Commands

14.1. AT+CCLK Clock

AT+CCLK Clock	
Test Command **AT+CCLK=?**	Response **OK**
Read Command **AT+CCLK?**	Response **+CCLK: <time>** **OK**
Write Command **AT+CCLK=<time>**	Response **OK** If error is related to ME functionality: **+CME ERROR: <err>**
Maximum Response Time	300ms
Reference GSM 07.07	

Parameter

<time>	String type value; format is "yy/MM/dd,hh:mm:ss±zz", where characters indicate year (two last digits),month, day, hour, minutes, seconds and time zone (indicates the difference, expressed in quarters of an hour, between the local time and GMT; range -47...+48). E.g. May 6th, 1994, 22:10:00 GMT+2 hours equals to "94/05/06,22:10:00+08"

Example

```
AT+CCLK?                          //Query the local time
+CCLK: "08/01/04, 00:19:43+00"

OK
```

Quectel Confidential

14.2. AT+QALARM Set Alarm

AT+QALARM Set Alarm	
Test Command **AT+QALARM=?**	Response **+QALARM:** (list of supported **<state>**s),**<time>**,(list of supported **<repeat>**s),(list of supported **<power>**s) **OK**
Write Command **AT+QALARM=<state>,<time>,<repeat>,<power>**	Response **OK** **ERROR** If error is related to ME functionality: **+CME ERROR: <err>**
Maximum Response Time	300ms
Reference	

Parameter

<state>	An integer parameter which indicates whether or not to enable alarm 0 Clear alarm 1 Set alarm
<time>	A string parameter which indicates the time when an alarm arises. The format is "yy/MM/dd,hh:mm:ss+-zz" where characters indicate the last two digits of year, month, day, hour, minute, second and time zone. The time zone is expressed in quarters of an hour between the local time and GMT, ranging from -47 to +48
<repeat>	An integer parameter which indicates the repeat mode 0 None 1 Daily 2 Weekly 3 Monthly
<power>	An integer parameter which indicates the method of controlling power when alarm arises 0 None. Only send "ALARM RING" to serial port 1 Alarm power off. Send "ALARM RING" to serial port and power off in 5 seconds 2 Alarm power on. Send "ALARM MODE" to serial port and enter into alarm mode

NOTE

In alarm mode, protocol stack and SIM protocol are closed, only a few AT command can be executed, and system will be powered down after 90 seconds, if neither power key is pressed nor functionality is changed to full functionality. If power key is pressed, system will be powered down right now.

Quectel Confidential

14.3. AT+CBC Battery Charge

AT+CBC Battery Charge	
Test Command **AT+CBC=?**	Response **+CBC:** (list of supported **<bcs>**s),(list of supported **<bcl>**s),(**voltage**) **OK**
Execution Command **AT+CBC**	Response **+CBC: <bcs>, <bcl>,<voltage>** **OK** If error is related to ME functionality: **+CME ERROR: <err>**
Maximum Response Time	300ms
Reference GSM 07.07	

Parameter

<bcs>	Charge status	
	0	ME is not charging
	1	ME is charging
	2	Charging has finished
<bcl>	Battery connection level	
	0...100	Battery has 0-100 percent of capacity remaining vent
<voltage>	Battery voltage (mV)	

14.4. AT+QSCLK Configure Slow Clock

AT+QSCLK Configure Slow Clock	
Test Command **AT+QSCLK=?**	Response **+QSCLK:** (list of supported **<n>**s) **OK**
Read Command **AT+QSCLK?**	Response **+QSCLK: <n>** **OK**

Quectel Confidential

Write Command **AT+QSCLK=<n>**	Response **OK**
Maximum Response Time	300ms
Reference	

Parameter

<n>	0	Disable slow clock
	1	Enable slow clock, it is controlled by DTR

14.5. AT+QLEDMODE Configure the Network LED Patterns

AT+QLEDMODE Configure the Network LED Patterns	
Test Command **AT+QLEDMODE=?**	Response **+QLEDMODE:** (list of supported **<ledmode>**s) **OK**
Read Command **AT+QLEDMODE?**	Response **+QLEDMODE: <ledmode>** **OK**
Write Command **AT+QLEDMODE=<ledmode>**	Response **OK** If error is related to ME functionality: **+CME ERROR: <err>**
Maximum Response Time	300ms
Reference	

Parameter

<ledmode>	0	Network LED flashes rapidly when a call is ringing
	1	No effect on the Network LED when a call is ringing
	2	No effect on the Network LED when a call is ringing, and RI will not change when URC reported until the ringing ends

NOTE

Please restart the module after the command is set.

Quectel Confidential

15 Others Commands

15.1. A/ Re-issues the Last Command Given

A/ Re-issues the Last Command Given	
Execution Command **A/**	Response Re-issues the previous command
Maximum Response Time	300ms
Reference V.25ter	

NOTE

This command does not work when the serial multiplexer is active. It does not have to end with terminating character.

Example

```
AT
OK
A/                                  //Re-issues the previous command
OK
```

15.2. ATE Set Command Echo Mode

ATE Set Command Echo Mode	
Execution Command **ATE[<value>]**	Response This setting determines whether or not the TA echoes characters received from TE during command state. **OK**
Maximum Response Time	300ms
Reference	

Quectel Confidential

V.25ter	

Parameter

<value>	0	Echo mode off
	1	Echo mode on

15.3. ATS3 Set Command Line Termination Character

ATS3 Set Command Line Termination Character	
Read Command **ATS3?**	Response **<n>** **OK**
Write Command **ATS3=<n>**	Response This parameter setting determines the character recognized by TA to terminate an incoming command line. The TA also returns this character in output. **OK**
Maximum Response Time	300ms
Reference V.25ter	

Parameter

<n>	0-13-127	Command line termination character (Default 13=<CR>)

15.4. ATS4 Set Response Formatting Character

ATS4 Set Response Formatting Character	
Read Command **ATS4?**	Response **<n>** **OK**
Write Command **ATS4=<n>**	Response This parameter setting determines the character generated

Quectel Confidential

	by the TA for result code and information text. **OK**
Maximum Response Time	300ms
Reference V.25ter	

Parameter

<n>	0-10-127	Response formatting character (Default 10=**<LF>**)

15.5. ATS5 Set Command Line Editing Character

ATS5 Set Command Line Editing Character	
Read Command **ATS5?**	Response **<n>** **OK**
Write Command **ATS5=<n>**	Response This parameter setting determines the character recognized by TA as a request to delete the immediately preceding character from the command line. **OK**
Maximum Response Time	300ms
Reference V.25ter	

Parameter

<n>	0-8-127	Response editing character (Default 8=**<Backspace>**)

15.6. AT+DS V.42bis Data Compression Control

AT+DS V.42bis Data Compression Control	
Test Command **AT+DS=?**	Response **+DS:** (list of supported **<p0>**s), (list of supported **<n>**s), (list of supported **<p1>**s), (list of supported **<p2>**s)

Quectel Confidential

	OK
Read Command **AT+DS?**	Response **+DS: <p0>,<n>,<p1>,<p2>** **OK**
Write Command **AT+DS=[<p0>[,<n>[,<p1>[,<p2>]]]]**	Response This parameter setting determines the possible data compression mode by TA at the compression negotiation with the remote TA after a call set up. **OK**
Maximum Response Time	300ms
Reference V.25ter	

Parameter

<p0>	0	NONE
<n>	0	Allow negotiation of **<p0>** down
	1	Do not allow negotiation of **<p0>** - disconnect on difference
<p1>	512-4096	Dictionary size
<p2>	6-250	Maximum string size (Default value is 6)

NOTES

1. This command is only for data call.
2. GSM transmits the data transparently. The remote TA may support this compression.
3. This command must be used in conjunction with command **AT+CRLP** to enable compression (**AT+CRLP=X,X,X,X,1,X**).

15.7. AT+DR V.42bis Data Compression Reporting Control

AT+DR V.42bis Data Compression Reporting Control	
Test Command **AT+DR=?**	Response **+DR:** (list of supported **<value>**s) **OK**
Read Command **AT+DR?**	Response **+DR: <value>**

Quectel Confidential

	OK
Write Command **AT+DR=[<value>]**	Response This parameter setting determines whether or not intermediate result code of the current data compressing is reported by TA to TE after a connection is established. **OK**
Maximum Response Time	300ms
Reference V.25ter	

Parameter

<value>	0	Reporting disabled

15.8. AT+QRIMODE Set RI Time

AT+QRIMODE Set RI Time	
Test Command **AT+QRIMODE=?**	Response **+QRIMODE:** (list of supported **<timemode>**s) **OK**
Read Command **AT+QRIMODE?**	Response **+QRIMODE: <timemode>** **OK**
Write Command **AT+QRIMODE=<timemode>**	Response **OK** If error is related to ME functionality: **+CME ERROR: <err>**
Maximum Response Time	300ms
Reference	

Parameter

<timemode>	Time mode	
	0	Receive SMS, RI 120ms low pulse, other URC RI 120ms low pulse

Quectel Confidential

1	Receive SMS, RI 120ms low pulse, other URC RI 50ms low pulse
2	When a SMS is received, RI changes to LOW and holds low level for 120ms, other URC RI take no effect

Quectel Confidential

16 Appendix

16.1. Related Documents

Table 4: Related Documents

SN	Document Name	Remark
[1]	V.25ter	Serial asynchronous automatic dialing and control
[2]	GSM 07.07	Digital cellular telecommunications (Phase 2+); AT command set for GSM Mobile Equipment (ME)
[3]	GSM 07.05	Use of Data Terminal Equipment - Data Circuit terminating Equipment (DTE- DCE) interface for Short Message Service (SMS) and Cell Broadcast Service (CBS)
[4]	GSM 07.10	Support GSM 07.10 multiplexing protocol
[5]	GSM_TCPIP_Application_Note	GSM TCPIP Application Note
[6]	GPRS_Startup_User_Guide	GPRS Startup User Guide
[7]	GSM_MUX_Application_Note	MUX Application Note
[8]	SMS_Application_Note	SMS Application Note
[9]	Quectel_M66_Hardware_Design	M66 Hardware Design

16.2. Terms and Abbreviations

Table 5: Terms and Abbreviations

Abbreviation	Description
AMR	Adaptive Multi-Rate

Quectel Confidential

ME	Mobile Equipment
TA	Terminal Adapter
MS	Mobile Station
DCE	Data Communication Equipment
TE	Terminal Equipment
DTE	Data Terminal Equipment
RTS/CTS	Request To Send/Clear To Send
GPRS	General Packet Radio Service
DCD	Dynamic Content Delivery
DTR	Data Terminal Ready
CSD	Circuit Switch Data
PSC	Primary Synchronization Code
PDP	Packet Data Protocol
TCP	Transmission Control Protocol
UDP	User Datagram Protocol

16.3. Factory Default Settings Restorable with AT&F

Table 6: Factory Default Settings Restorable with AT&F

AT Command	Parameters	Factory Defaults
ATE	<value>	1
ATQ	<n>	0
ATS0	<n>	0
ATS3	<n>	13
ATS4	<n>	10

Quectel Confidential

ATS5	<n>	8
ATS6	<n>	2
ATS7	<n>	60
ATS8	<n>	2
ATS10	<n>	15
ATV	<value>	1
ATX	<value>	4
AT&C	<value>	1
AT&D	<value>	0
AT+ILRR	<value>	0
AT+CREG	<n>	0
AT+CCUG	<n>,<index>,<info>	0,0,0
AT+CCWA	<n>	0
AT+CSCS	<chset>	“GSM”
AT+CSTA	<type>	129
AT+CLIP	<n>	0
AT+CLIR	<n>	0
AT+CMEE	<n>	1
AT+COLP	<n>	0
AT+CR	<mode>	0
AT+QDISH	<disableath>	0
AT+CRLP	<iws>,<mws>,<T1>,<N2>,<Ver1>,<T4>	61,61,128,6,0,3
AT+CRSL	<level>	55
AT+CLVL	<level>	When AT+QAUDCH=0, the default value <level>=60; When AT+QAUDCH=1, the default value <level>=40; When AT+QAUDCH=2, the default

Quectel Confidential

		value <level>=35;
AT+CUSD	<n>	0
AT+CSSN	<n>,<m>	0,0
AT+CSNS	<mode>	0
AT+CMOD	<mode>	0
AT+CMGF	<mode>	0
AT+CNMI	<mode>,<mt>,<bm>,<ds>,<bfr>	2,1,0,0,0
AT+CSDH	<show>	0
AT+CSMS	<service>	0
AT+QSIDET	<gainlevel>	When AT+QAUDCH=0, the default value <gainlevel>=80; When AT+QAUDCH=1, the default value <gainlevel>=144;
AT+QMIC	<gainlevel(Normal_Mic)>,<gainlevel(Headset_Mic)>,<gainlevel(Loudspeaker_Mic)>	4,9,8
AT+QSCLK	<n>	0
AT+QCLIP	<n>	0
AT+QCOLP	<n>	0
AT+QIURC	<mode>	1
AT+QEXTUNSOL	<mode>	0
AT+QRIMODE	<timemode>	0

16.4. AT Command Settings Storable with AT&W

Table 7: AT Command Settings Storable with AT&W

AT Command	Parameters	Display with AT&V
ATE	<value>	Yes

Quectel Confidential

ATQ	<n>	Yes
ATS0	<n>	Yes
ATS3	<n>	Yes
ATS4	<n>	Yes
ATS5	<n>	Yes
ATS6	<n>	Yes
ATS7	<n>	Yes
ATS8	<n>	Yes
ATS10	<n>	Yes
ATV	<value>	Yes
ATX	<value>	No
AT&C	<value>	Yes
AT&D	<value>	Yes
AT+ICF	<format>,<parity>	Yes
AT+IFC	<dce_by_dte>,<dte_by_dce>	Yes
AT+ILRR	<value>	Yes
AT+IPR	<rate>	Yes
AT+CREG	<n>	Yes
AT+CCUG	<n>,<index>,<info>	Yes
AT+CCWA	<n>	Yes
AT+CSCS	<chset>	Yes
AT+CSTA	<type>	Yes
AT+CLIP	<n>	Yes
AT+CLIR	<n>	Yes
AT+CMEE	<n>	Yes

Quectel Confidential

AT+COLP	<n>	Yes
AT+CR	<mode>	Yes
AT+QDISH	<disableath>	No
AT+CRLP	<iws>,<mws>,<T1>,<N2>,<Ver1>,<T4>	Yes
AT+CRSL	<level>	No
AT+CLVL	<level>	No
AT+CUSD	<n>	Yes
AT+CSNS	<mode>	Yes
AT+CMGF	<mode>	Yes
AT+CNMI	<mode>,<mt>,<bm>,<ds>,<bfr>	Yes
AT+CSDH	<show>	Yes
AT+QSIDET	<gainlevel>	Yes
AT+QMIC	<gainlevel(Normal_Mic)>,<gainlevel(Headset_Mic)>,<gainlevel(Loudspeaker_Mic)>	Yes
AT+QSCLK	<n>	No
AT+QCLIP	<n>	Yes
AT+QCOLP	<n>	Yes
AT+QIURC	<mode>	No
AT+QEXTUNSOL	<mode>	No
AT+QRIMODE	<timemode>	No

Quectel Confidential

16.5. AT Command Settings Storable with ATZ

Table 8: AT Command Settings Storable with ATZ

AT Command	Parameters	Factory Defaults
ATE	<value>	1
ATQ	<n>	0
ATS0	<n>	0
ATS3	<n>	13
ATS4	<n>	10
ATS5	<n>	8
ATS6	<n>	2
ATS7	<n>	60
ATS8	<n>	2
ATS10	<n>	15
ATV	<value>	1
ATX	<value>	4
AT&C	<value>	1
AT&D	<value>	0
AT+ILRR	<value>	0
AT+CREG	<n>	0
AT+CCUG	<n>,<index>,<info>	0,0,0
AT+CCWA	<n>	0
AT+CSCS	<chset>	“GSM”
AT+CSTA	<type>	129
AT+CLIP	<n>	0

Quectel Confidential

AT+CLIR	<n>	0
AT+CMEE	<n>	1
AT+COLP	<n>	0
AT+CR	<mode>	0
AT+QDISH	<disableath>	0
AT+CRLP	<iws>,<mws>,<T1>,<N2>,<Ver1>,<T4>	61,61,128,6,0,3
AT+CRSL	<level>	55
AT+CLVL	<level>	When AT+QAUDCH=0, the default value <level>=60; When AT+QAUDCH=1, the default value <level>=40; When AT+QAUDCH=2, the default value <level>=35;
AT+CUSD	<n>	0
AT+CSSN	<n>,<m>	0,0
AT+CSNS	<mode>	0
AT+CMOD	<mode>	0
AT+CMGF	<mode>	0
AT+CNMI	<mode>,<mt>,<bm>,<ds>,<bfr>	2,1,0,0,0
AT+CSDH	<show>	0
AT+CSMS	<service>	0
AT+QSIDET	<gainlevel>	When AT+QAUDCH=0, the default value <gainlevel>=80; When AT+QAUDCH=1, the default value <gainlevel>=144;
AT+QMIC	<gainlevel(Normal_Mic)>,<gainlevel(Headset_Mic)>,<gainlevel(Loudspeaker_Mic)>	4,9,8
AT+QSCLK	<n>	0
AT+QCLIP	<n>	0

Quectel Confidential

AT+QCOLP	<n>	0
AT+QIURC	<mode>	1
AT+QEXTUNSOL	<mode>	0
AT+QRIMODE	<timemode>	0

16.6. Summary of URC

Table 9: Summary of URC

Index	URC display	Meaning	Condition
1	+CMTI:<mem>,<index>	New message is received, and saved to memory	AT+CNMI=2,1
2	+CMT:[<alpha>],<length><CR><LF><pdu>	New short message is received and output directly to TE (PDU mode)	AT+CNMI=2,2
3	+CMT:<oa>,[<alpha>],<scts>[,<tooa>,<fo>,<pid>,<dcs>,<sca>,<tosca>,<length>]<CR><LF><data>	New short message is received and output directly to TE (Text mode)	AT+CNMI=2,2
4	+CBM:<length><CR>	New CBM is received and output directly (PDU mode)	AT+CNMI=2,2
5	+CBM:<sn>,<mid>,<dcs>,<page>,<pages>,<CR>,<LF><data>	New CBM is received and output directly to TE (Text mode)	AT+CNMI=2,2
6	+CDS:<length><CR><LF><pdu>	New CDS is received and output directly (PDU mode)	AT+CNMI=2,2
7	+CDS:<fo>,<mr>,[<ra>],[<tora>],<scts>,<dt>,<st>	New CDS is received and output directly to TE (Text mode)	AT+CNMI=2,2
8	+CGEV:NW DEACT<PDP_type>,<PDP_addr>[,<cid>]	GPRS network detach	AT+CGEREP=1
9	+CGEV:ME DEACT<PDP_type>,<PDP_addr>[,<cid>]	GPRS ME detach	AT+CGEREP=1
10	+CGEV:NW DETACH	GPRS network detach	AT+CGEREP=1
11	+CGEV:ME DETACH	GPRS ME detach	AT+CGEREP=1
12	+CGREG:1	Network registered	AT+CGREG=1

Quectel Confidential

13	+CGREG:0	Network unregistered	AT+CGREG=1
14	+CGREG:1,<lac><ci>	Network registered, with location code	AT+CGREG=2
15	+CGREG:0,<lac><ci>	Network unregistered, with location code	AT+CGREG=2
16	+QCGTIND	A CS voice call, CS data, fax call or GPRS session termination indicator	AT+QCGTIND=1
17	+CSQN:<rssi>,<ber>	Signal quality change	AT+QEXTUNSOL="SQ",1
18		Forbidden network is available only	AT+QEXTUNSOL="FN",1
19	+CMWT:<store>,<index>,<voice>,<fax>,<email>,<other>	Message waiting	AT+QEXTUNSOL="MW",1
20	+QGURC:<event>	Unsolicited result code follows particular call state transition	AT+QEXTUNSOL="UR",1
21	+CBCN<bcs>,<bcl>	Display battery connection status and battery charge level	AT+QEXTUNSOL="BC",1
22	+QBAND:<band>	Band mode display	AT+QEXTUNSOL="BM",1
23	+TSMSINFO:<CMS error info>	Additional SMS information	AT+QEXTUNSOL="SM",1
24	+CCINFO:<Call is Disconnected>,<remain calls>	Displays the disconnected call ID and the remain call numbers after one of the call is disconnected	AT+QEXTUNSOL="CC",1
25	RING	Indicates incoming call	N/A
26	Call Ready	Device is ready to make/receive calls	N/A
27	UNDER_VOLTAGE POWER DOWN	Under voltage shutdown indication	N/A
28	UNDER_VOLTAGE WARNING	Under voltage warning	N/A
29	OVER_VOLTAGE POWER DOWN	Over voltage shutdown indication	N/A
30	OVER_VOLTAGE WARNING	Over voltage warning	N/A
31	NORMAL POWER DOWN	Normal power down	N/A
32	+COLP:<number>,<type>[,<subaddr>,<satype>[CLI validity]],	The presentation of the COL(connected line) at the TE for a mobile originated call	AT+COLP=1
33	+CLIP:<number>,<type>"",,<alphaID>,<CLI validity>	Mobile terminating call indication	AT+CLIP=1

Quectel Confidential

34	+CRING:<type>	An incoming call is indicated to the TE with unsolicited result code instead of the normal RING	AT+CRC=1
35	+CREG:<stat>	Indicate registration status of the ME	AT+CREG=1
36	+CREG:<stat>[,<lac>,<ci>]	After cell neighborhood changing shows whether the network has currently indicated the registration of the ME, with location area code	AT+CREG=2
37	+CCWA:<number>,<type>,<class>[,<alpha>]	Call waiting indication	AT+CCWA=1,1
38	RDY	ME initialization is successful	N/A
39	+CFUN:1	All function of the ME is available	N/A
40	+CPIN:<state>	SIM card pin state	N/A
41	MO RING	MO call ringing	AT+QMOSTAT=1
42	MO CONNECTED	MO call connected	AT+QMOSTAT=1
43	ALARM RING	Alarm event is triggered	AT+QALARM=1,<time>,<repeat>,0/1
44	ALARM MODE	ME is switched on by alarm	AT+QALARM=1,<time>,<repeat>,2

16.7. Summary of CME ERROR Codes

Final result code **+CME ERROR: <err>** indicates an error related to mobile equipment or network. The operation is similar to **ERROR** result code. None of the following commands in the same command line is executed. Neither **ERROR** nor **OK** result code shall be returned.

<err> values are mostly used by common message commands. The following table lists most of general and GRPS related **ERROR** Codes. For some GSM protocol failure cause described in GSM specifications, the corresponding **ERROR** codes are not included.

Table 10: Different Coding Schemes of +CME ERROR: <err>

Code of <err>	Meaning
0	Phone failure

Quectel Confidential

1	No connection to phone
2	Phone-adaptor link reserved
3	Operation not allowed
4	Operation not supported
5	PH-SIM PIN required
6	PH-FSIM PIN required
7	PH-FSIM PUK required
10	SIM not inserted
11	SIM PIN required
12	SIM PUK required
13	SIM failure
14	SIM busy
15	SIM wrong
16	Incorrect password
17	SIM PIN2 required
18	SIM PUK2 required
20	Memory full
21	Invalid index
22	Not found
23	Memory failure
24	Text string too long
25	Invalid characters in text string
26	Dial string too long
27	Invalid characters in dial string
30	No network service

Quectel Confidential

31	Network timeout
32	Network not allowed - emergency calls only
40	Network personalization PIN required
41	Network personalization PUK required
42	Network subset personalization PIN required
43	Network subset personalization PUK required
44	Service provider personalization PIN required
45	Service provider personalization PUK required
46	Corporate personalization PIN required
47	Corporate personalization PUK required
103	Illegal MS
106	Illegal ME
107	GPRS services not allowed
111	PLMN not allowed
112	Location area not allowed
113	Roaming not allowed in this location area
132	Service option not supported
133	Requested service option not subscribed
134	Service option temporarily out of order
148	Unspecified GPRS error
149	PDP authentication failure
150	Invalid mobile class
151	Link NS SP person PIN required
152	Link NS SP person PUK required
153	Link SIM C person PIN required

Quectel Confidential

154	Link SIM C person PUK required
302	Command conflict
601	Unrecognized command
602	Return error
603	Syntax error
604	Unspecified
605	Data transfer already
606	Action already
607	Not AT command
608	Multi command too long
609	Abort COPS
610	No call disconnect
3513	Unread records on SIM
3515	PS busy
3516	Couldn't read SMS parameters from SIM
3517	SM not ready
3518	Invalid parameter
3738	CSCS mode not found
3742	CPOL operation format wrong
3765	Invalid input value
3769	Unable to get control
3771	Call setup in progress
3772	SIM powered down
3773	Invalid CFUN state
3774	Invalid ARFCN

Quectel Confidential

3775	The pin is not in GPIO mode

16.8. Summary of CMS ERROR Codes

Final result code **+CMS ERROR: <err>** indicates an error related to mobile equipment or network. The operation is similar to ERROR result code. None of the following commands in the same command line is executed. Neither **ERROR** nor **OK** result code shall be returned.

<err> values are mostly used by common message commands:

Table 11: Different Coding Schemes of +CMS ERROR: <err>

Code of <err>	Meaning
300	ME failure
301	SMS ME reserved
302	Operation not allowed
303	Operation not supported
304	Invalid PDU mode
305	Invalid text mode
310	SIM not inserted
311	SIM pin necessary
312	PH SIM pin necessary
313	SIM failure
314	SIM busy
315	SIM wrong
316	SIM PUK required
317	SIM PIN2 required
318	SIM PUK2 required

Quectel Confidential

320	Memory failure
321	Invalid memory index
322	Memory full
330	SMSC address unknown
331	No network
332	Network timeout
500	Unknown
512	SIM not ready
513	Message length exceeds
514	Invalid request parameters
515	ME storage failure
517	Invalid service mode
528	More message to send state error
529	MO SMS is not allow
530	GPRS is suspended
531	ME storage full
3513	Unread records on SIM
3515	PS busy
3516	Couldn't read SMS parameters from SIM
3517	SM not ready
3518	Invalid parameter
3742	Incorrect <oper> format
3765	Invalid input value
3769	Unable to get control of required module
3771	Call setup in progress

Quectel Confidential

3772	SIM powered down
3773	Unable to operate in this CFUN state
3774	Invalid ARFCN in this band
3775	The pin is not in GPIO mode

16.9. Summary of Cause for Extended Error Report

16.9.1. Location ID for the Extended Error Report

Table 12: Location ID for the Extended Error Report

ID	Description
0	No error (default)
1	Cause for protocol stack (PS) layer
2	Internal cause for Mobility Management (MM) layer
3	Cause for PPP/IP-Stack

16.9.2. Cause for Protocol Stack (PS) Layer

Table 13: Cause for Protocol Stack (PS) Layer

Cause	Description
CM Cause	
0	Radio link fail
1	Unassigned number
3	No route to destination
6	Channel unacceptable
8	Operator determined barring

Quectel Confidential

10	Call barred
11	Reserved
16	Normal call clearing
17	User busy
18	No user responding
19	User alerting, no answer
21	Call rejected
22	Number changed
25	Pre-emption
26	Non-selected user clearing
27	Destination out of order
28	Invalid number format (incomplete number)
29	Facility rejected
30	Response to STATUS ENQUIRY
31	Normal, unspecified
34	No circuit/channel available
38	Network out of order
41	Temporary failure
42	Switching equipment congestion
43	Access information discarded
44	Requested circuit/channel not available
47	Resource unavailable, unspecified
49	Quality of service unavailable
50	Requested facility not subscribed
55	Incoming calls barred within the CUG

Quectel Confidential

57	Bearer capability not authorized
58	Bearer capability not presently available
63	Service or option not available, unspecified
65	Bearer service not implemented
68	ACM equal or greater than ACM maximum
69	Requested facility not implemented
70	Only restricted digital information bearer capability is available
79	Service or option not implemented, unspecified
81	Invalid transaction identifier value
87	User not member of CUG
88	Incompatible destination
91	Invalid transit network selection
95	Semantically incorrect message
96	Invalid mandatory information
97	Message type non-existent or not implemented
98	Message type not compatible with protocol state
99	Information element non-existent or not implemented
100	Conditional information element error
101	Message not compatible with protocol
102	Recovery on timer expiry
111	Protocol error, unspecified
127	Interworking, unspecified
128	Telematic interworking not supported
129	Short message Type 0 not supported
130	Cannot replace short message

Quectel Confidential

143	Unspecified TP-PID error
144	Data coding scheme (alphabet) not supported
145	Message class not supported
159	Unspecified TP-DCS error
160	Command cannot be acted
161	Command unsupported
175	Unspecified TP-Command error
176	TPDU not supported
192	SC busy
193	No SC subscription
194	SC system failure
195	Invalid SME address
196	Destination SME barred
197	SM Rejected-Duplicate SM
198	TP-VPF not supported
199	TP-VP not supported
208	SIM SMS storage full
209	No SMS storage capability in SIM
210	Error in MS
211	Memory Capacity Exceeded
212	SIM Application Toolkit Busy
213	SIM data download error
224	CP retry exceed
225	RP trim timeout
226	SMS connection broken

Quectel Confidential

255	Unspecified error cause
304	Invalid PDU mode parameter
305	Invalid TEXT mode parameter
313	SIM failure
320	Memory failure
321	Invalid memory index
322	Memory full
330	SMSC address unknown
340	No +CNMA acknowledgement expected
500	Unknown error
512	SMS no error
513	Message length exceeds maximum length
514	Invalid request parameters
515	ME storage failure
516	Invalid bearer service
517	Invalid service mode
518	Invalid storage type
519	Invalid message format
520	Too many MO concatenated messages
521	SMSAL not ready
522	SMSAL no more service
523	Not support TP-Status-Report&TP-Command in storage
524	Reserved MTI
525	No free entity in RL layer
526	The port number is already registered

Quectel Confidential

527	There is no free entity for port number
528	More Message to Send state error
529	MO SMS is not allow
530	GPRS is suspended
531	ME storage full
532	Doing SIM refresh
CC Cause	
768	Command not allowed
769	Illegal card ID
770	Call allocation fail
771	BC fill fail
772	Call RE EST
773	Illegal DTMF tone
774	Illegal BC
775	Modify actual mode
776	Data action fail
777	No response from network
778	Call accept not allowed
896	General cause
897	CSD call is aborted by user during call establishment or MT call abort MO call/USSD
898	CSD call is disconnected due to lower layer failure
SS Cause	
1024	Cause none
1025	Unknown subscriber
1033	Illegal subscriber

Quectel Confidential

1034	Bearer service not provisioned
1035	Tele service not provisioned
1036	Illegal equipment
1037	Call barred
1040	Illegal SS operation
1041	SS error status
1042	SS not available
1043	SS subscription violation
1044	SS incompatibility
1045	Facility not supported
1051	Absent subscriber
1053	Short term denial
1054	Long term denial
1058	System failure
1059	Data missing
1060	Unexpected data value
1061	PW registration failure
1062	Negative PW check
1067	Number of PW attempts violation
1078	Position method failure
1095	Unknown alphabet
1096	USSD busy
1145	Rejected by user
1146	Rejected by network
1147	Deflection to served subscriber

Quectel Confidential

1148	Special service code
1149	Invalid deflection to number
1150	Max number of MPTY participants exceeded
1151	Resources not available
1152	General problem, unrecognized component
1153	General problem, mistyped component
1154	General problem, badly structured component
1155	Invoke problem, duplicate invoked
1156	Invoke problem, unrecognized operation
1157	Invoke problem, mistyped parameter
1158	Invoke problem, resource limitation
1159	Invoke problem, initiating release
1160	Invoke problem, unrecognized linked ID
1161	Invoke problem, linked resource unexpected
1162	Invoke problem, unexpected linked operation
1163	Return result problem, RR unrecognized invoked
1164	Return result problem, RR, return result unexpected
1165	Return result problem, RR mistyped parameter
1166	Return error problem, RE, unrecognized invoked
1167	Return error problem, RE return error unexpected
1168	Return error problem, RE unrecognized error
1169	Return error problem, RE unexpected error
1170	Return error problem, RE mistyped parameter
MM Cause	
2048	Cause none

Quectel Confidential

2050	IMSI unknown in HLR
2051	Illegal MS
2052	IMSI unknown in VLR
2053	IMEI not accepted
2054	Illegal ME
2055	GPRS not allowed
2056	None GPRS not allowed
2057	MS ID not derived by network
2058	Implicit detach
2059	PLMN not allowed
2060	Location area not allowed
2061	Roaming area not allowed
2062	GPRS not allowed in PLMN
2063	No suitable cells in LA
2064	MSC temp not reachable
2065	Network failure
2068	MAC failure
2069	Sync failure
2070	Congestion
2080	Serve option not supported
2081	Request serve option not subscribed
2082	Serve option temp out of order
2086	Call cannot be identified
2088	No PDP context activated
2096	Retry upon entry into a new cell

Quectel Confidential

2111	Retry upon entry into a new cell
2143	Semantically incorrect message
2144	Invalid MM info
2145	Message type non existent
2146	Message type incompatible with protocol state
2147	IE not implemented
2148	Conditional MM IE error
2149	Message not compatible with protocol state
2159	Protocol error unspecified
2160	Access barred
2161	Assignment reject
2162	Random access failure
2163	RR no service
2164	PLMN search reject emergency
2165	RR connection release
2166	Authentication failure
2167	IMSI detach
2168	Abort by network
2169	Connection timeout
2170	Enqueue fail
2171	Not updated
2172	State not allowed
2173	Emergency not allowed
2174	No service
2175	Access class barred

Quectel Confidential

SIM Cause	
2560	Command success
2561	Command fail
2562	Fatal error
2563	No inserted
2564	CHV not init
2565	CHV verify error
2566	CHV block
2567	Access not allow
2568	SAT command busy
2569	DL error
2570	Memory problem
2571	Technical problem
2572	PUK unlock
SM Cause	
3080	Operator determined barring
3097	LLC SND failure
3098	Insufficient resource
3099	Unknown APN
3100	Unknown PDP address or type
3101	Authentication failure
3102	Activation reject GGSN
3103	Activation reject
3104	Unsupported service option
3105	Unsubscribed service option

Quectel Confidential

3106	Out of order service option
3108	Regular deactivation
3109	QOS not accepted
3110	Network fail
3111	Reactivation required
3112	Unsupported network context activation
3113	Semantic error in TFT operation
3114	Syntactical error in TFT operation
3115	Unknown PDP context
3116	Semantic error in packet filter
3117	Syntax error in packet filter
3118	PDP context WO TFT already act
3153	Invalid TI
3167	Incorrect message
3168	Invalid MAND info
3169	Unimplemented message type
3170	Incompatible message type protocol state
3171	Unimplemented IE
3172	Conditional IE error
3173	Incompatible message protocol state
3183	Unspecified
3184	Startup failure
ABM Cause	
3273	Success
3274	Invalid network account ID

Quectel Confidential

3275	GPRS reactivate
3276	GPRS protocol rejection
3277	CSD reactivate
3278	CSD PPP negotiated failed
3279	CSD action failed
3280	CSD call setup failed
3283	Rejected
3284	Slot limited
3285	Abort
3286	None auto deactivation
TCM Cause	
3372	Invalid parameter
3373	NSAPI not in use
3374	ACL action not allowed
3375	ACL SIM file full
3376	ACL add entry failed
3377	ACL del entry failed
3378	ACL set entry failed
3379	ACL SIM read failed
3380	ACL SIM write failed

Quectel Confidential

16.9.3. Internal Cause for MM Layer

Table 14: Internal Cause for MM Layer

Cause	Description
112	Forbidden PLMN
113	Access class barred
114	No coverage
115	GPRS service not allowed
116	Timer expiry
117	SIM inserted
118	SIM removed
119	SIM absent
120	SIM invalid for PS
121	SIM invalid for CS
122	SIM invalid for PS and CS
123	Low layer fail
124	Connection in progress
125	Not updated
126	Connection establish failure
127	Connection abort
128	Connection failure
129	Emergency not allowed
130	No GPRS coverage
131	Abnormal LU
132	Abnormal LU less than 4 times

Quectel Confidential

133	Same LAI IMSI attaching

16.9.4. Cause for PPP/IP-Stack

Table 15: Cause for PPP/IP-Stack

Cause	Description
0	No error
1	LCP fail
2	Authentication fail
3	IPCP fail
4	ESC detect
5	Plug out detect
6	PPP GPRS dialup already activated
7	PPP not activated by external modem yet
8	PPP already activated by external modem
9	PPP not activated by WAP over CSD yet
10	PPP already activated by WAP over CSD
11	PPP wrong CSD mode ID
12	PPP detect AT command during dialup
13	PPP detect escape during dialup

Quectel Confidential