Configuring Cisco EHWIC and 880G for 3.7G (HSPA+)/3.5G (HSPA)

First Published: August 1, 2011
Last Updated: November 21, 2012, OL-24265-03

This guide describes how to configure the Universal High Speed Packet Access (HSPA-U) and HSPA Plus (HSPA+) versions of the 3G wireless Enhanced High-Speed WAN Interface Cards (EHWICs). These are multiband, multiservice WAN cards for use over GSM networks.

This guide also describes how to configure the HSPA-U and HSPA+ versions of the Cisco C880G Series Integrated Services Routers (ISRs). These fixed-platform routers contain an embedded multiband, multiservice WAN modem for use over GSM networks.

Contents

- Modular Cisco ISR G2 Support for the HSPA/HSPA+ EHWICs, page 2
- EHWIC-3G-HSPA-U and C881G-U-K9 Features, page 2
- Product Descriptions and Supported Frequencies, page 4
- Features, page 5
- Overview of the EHWIC-3G-HSPA-U Card, page 11
- Overview of the EHWIC-3G-HSPA+7 and EHWIC-3G-HSPA+7-A, page 13
- Overview of the C881G-U-K9 ISR, page 18
- Overview of the HSPA+ Versions of the Fixed-Platform ISRs, page 24
- Supported Cisco Antennas and Cables, page 36
- Configuring Cisco EHWIC and 880G for 3.7G (HSPA+)/3.5G (HSPA), page 40
- Configuration Examples, page 63

Americas Headquarters:
Cisco Systems, Inc., 170 West Tasman Drive, San Jose, CA 95134-1706 USA

© 2012 Cisco Systems, Inc. All rights reserved.

- Upgrading the Modem Firmware, page 70
- Command Reference, page 71
- Troubleshooting, page 156
- Additional References, page 161

Modular Cisco ISR G2 Support for the HSPA/HSPA+ EHWICs

The EHWIC-3G-HSPA-U, EHWIC-3G-HSPA+7, and EHWIC-3G-HSPA+7-A cards are supported on the following modular Cisco ISR Generation 2 (ISR G2) family of routers:

- Cisco 1900
- Cisco 2900
- Cisco 3900
- Cisco 3900e

EHWIC-3G-HSPA-U and C881G-U-K9 Features

The EHWIC and 880G for 3.7G (HSPA+)/3.5G (HSPA) cards and ISRs provide the following functionalities:

- Mobile equipment personalization (MEP) subsidy unlocking
- Subscriber identification module (SIM)—lock and unlock, security, verification upon activation, PIN change
- Dual SIM (fixed-platform only)
- Multiple PDP support (EHWIC).
- Short Message Service (SMS)
- Remotely initiated data callback using SMS
- Global Positioning System (GPS)
- Broadband WAN connectivity using high-speed cellular data technology
- Automatic best-network selection
- Always-on capability
- Multiple antenna and cable options:
  - Diversity antenna
  - Indoor and outdoor external antennas
  - Radio Frequency Ultra-Low Loss (RF-ULL) cables (see Table 7 for details)
- IOS-based Mobile IP including network mobility (NEMO)
- Static and dynamic IP addressing
- Cellular interface based on the asynchronous interface in Cisco IOS software
- Network Address Translation (NAT) and Port Address Translation (PAT) support

- Security features such as firewall, intrusion-detection systems (IDS), and intrusion-prevention systems (IPS)
- Support for enhanced security features, such as GET VPN, EZ VPN, DMVPN, Multi-point GRE (mGRE), and IPSec VPN
- Auto-detecting optimized WAN switchover
- Support for Hot Standby Router Protocol (HSRP) and Virtual Router Redundancy Protocol (VRRP)
- 3G cellular WAN MIB
  - 3G WWAN MIB persistence
  - MIBs for GPS and SMS
- Diagnostic and monitoring (DM) capability
- Remote DM logging over IP
- Voice-initiated data callback
- Cellular modem upgrade over wireless link
- Power Save mode capability
- Complete Cisco IOS feature capability
- Modem management—You can access modem software and hardware information, radio and network status, and data profile information by using Cisco IOS commands.
- Dial on Demand Routing (DDR)—This allows you to set up a data call when there is data traffic to be sent over the wireless network.
- Fallback connection (DDR backup)—3G WAN for fixed and modular routers allows you to configure the cellular modem to initiate a dialup connection when connection to a primary service is lost.
- Teardown after fallback (part of fallback DDR)—After a primary connection has failed and the cellular connection is in fallback mode, the 3G feature in fixed and modular routers tears down the fallback-mode connection when the primary connection is available.
- Automatic teardown—After a configurable timeout, the 3G WAN for fixed and modular routers automatically tears down a connection if there has been no activity.
- Autodetect—3G WAN for fixed and modular routers automatically detects and uses the best available service.
- Profile Configuration—You can configure upto 16 APN profiles.
- Firmware upgrade—You can upgrade the firmware on the modem by using Cisco IOS commands.
- Comprehensive Cisco IOS MIB support including Interface (IF) MIBs and Entity MIBs.

Product Descriptions and Supported Frequencies

Table 1 shows the products discussed in this document and the frequencies they support.

Table 1 Product Descriptions and Supported Frequencies

SKU Number	Description	Region	Frequency Bands
EHWIC-3G-HSPA-U	This is a multiband, multiservice WAN card that supports Universal HSPA.	Worldwide	850/900/1900/2100 MHz for WCDMA/HSPA 850/900/1800/1900 MHz for EDGE/GPRS
EHWIC-3G-HSPA+7	This is a multiband, multiservice WAN card that supports Universal HSPA+.		850/900/1900/2100 MHz for WCDMA/HSPA/HSPA+R7 and 850/900/1800/1900 MHz for EDGE/GPRS
EHWIC-3G-HSPA+7-A	This is a multiband, multiservice WAN card that supports Universal HSPA+. The EHWIC-3G-HSPA+7-A is localized for AT&T.	United States	
C881G-U-K9	This is an ISR with an embedded multiband, multiservice WAN modem that supports Universal HSPA.	Worldwide	850/900/1900/2100 MHz for WCDMA/HSPA 850/900/1800/1900 MHz for EDGE/GPRS
C881G+7-K9	This is an ISR with an embedded multiband, multiservice WAN modem that supports Universal HSPA+.		850/900/1900/2100 MHz for WCDMA/HSPA/HSPA+ 850/900/1800/1900 MHz for EDGE/GPRS
C881G+7-A-K9		United States	
C886VAG+7-K9		Worldwide	
C887VAG+7-K9			
C887VAMG+7-K9			
C888EG+7-K9			
C881GW+7-A-K9	This is an ISR with an embedded multiband, multiservice WAN modem that supports Universal HSPA+ and WLAN.		
C881GW+7-E-K9			
C887VAGW+7-A-K9			
C887VAGW+7-E-K9			

Features

The following features are available in the HSPA-U and HSPA+ versions of the EHWIC and fixed-platform SKUs:

- Dual SIM, page 5
- GPS, page 6
- SMS, page 8
- Remotely Initiated Data Callback Using SMS, page 9
- 3G WWAN MIB Persistence, page 10

Dual SIM

The Dual SIM feature implements auto-switch and failover between two cellular networks on the C880G ISRs. This feature is enabled by default with SIM slot 0 being the primary slot and slot 1 being the secondary (failover) slot.

The Dual SIM feature provides the following commands:

Command	Syntax	Description
gsm failovertimer	**gsm failovertimer** *<1-7>*	Sets the failover timer in minutes.
gsm sim authenticate	**gsm sim authenticate** *<0,7>* *<pin>* **slot** *<0-1>*	Verifies the SIM CHV1 code.
gsm sim max-retry	**gsm sim max-retry** *<0-65535>*	Specifies the maximum number of failover retries. The default value is 10.
gsm sim primary slot	**gsm sim primary slot** *<0-1>*	Modifies the primary slot assignment.
gsm sim profile	**gsm sim profile** *<1-16>* **slot** *<0-1>*	Configures the SIM profile.

Note the following:

- For auto-switch and failover to work, configure the SIM profile for slots 0 and 1 using the **gsm sim profile** command.
- For auto-switch and failover to work, configure the chat script without a specific profile number.
- If no SIM profile is configured, profile #1 is used by default.
- If no GSM failover timer is configured, the default failover timeout is 2 minutes.
- If no GSM SIM primary slot is configured, the default primary SIM is slot 0.

This example shows how to set the SIM switchover timeout period to 3 minutes:

```
router# configure terminal
router(config-controller)# gsm failovertimer 3
```

This example shows how to authenticate using an unencrypted pin:

```
router(config-controller)# gsm sim authenticate 0 1234 slot 0
```

This example shows how to set the maximum number of SIM switchover retries to 20:

```
router(config-controller)# gsm sim max-retry 20
```

This example shows how to set SIM slot 1 as the primary slot:

```
router(config-controller)# gsm sim primary slot 1
```

This example shows how to configure the SIM card in slot 0 to use profile 10:

```
router(config-controller)# gsm sim profile 10 slot 0
```

GPS

The GPS feature provides the following commands:

Command	Syntax	Description
gsm gps mode	**gsm gps mode standalone**	Enables the GPS standalone mode.
gsm gps nmea	**gsm gps nmea**	Enables the NMEA mode.
show cellular gps	**show cellular** *unit* **gps**	Displays a summary of GPS data.
	show cellular *unit* **gps detail**	Displays a detailed list of GPS data.

In the syntax of these commands, the value of the *unit* parameter refers to:

- (EHWIC) The router slot, WAN interface card (WIC) slot, and port separated by slashes (for example, 0/1/0).
- (C880G) The number 0.

These examples show how to enable GPS standalone and NMEA for EHWIC-3G-HSPA-U:

```
router(config)#controller cellular 0/0
router(config-controller)#gsm gps mode standalone
...
controller Cellular 0/0
 gsm gps mode standalone
!

router(config-controller)#gsm gps nmea
...
controller Cellular 0/0
 gsm gps nmea
!
```

These examples show how to display summary and detailed GPS data for C881G-U-K9:

```
router#show cellular 0 gps
GPS Info
-------------
GPS State: GPS enabled
GPS Mode Configured: standalone
Latitude: 37 Deg 24 Min 59 Sec North
Longitude: 121 Deg 55 Min 8 Sec West
Timestamp (GMT): Thu Jul 29 11:08:39 2010
Fix type: 3D, Height: -6 m
Heading: 408, Velocity Horiz: 3, Velocity Vert: 0
Satellite Info
----------------
```

```
Satellite #13, elevation 75, azimuth 46, SNR 21
...

router#show cellular 0 gps detail
GPS Info
-------------
GPS State: GPS enabled
GPS Mode Configured: standalone
Latitude: 37 Deg 24 Min 59 Sec North
Longitude: 121 Deg 55 Min 7 Sec West
Timestamp (GMT): Thu Jul 29 22:17:57 2010
Fix type: 3D, Height: 12 m
Heading: 0, Velocity Horiz: 0, Velocity Vert: 0
HEPE: 2680 cm
Uncertainty Info:
  Angle: 0 deg, A: 24 m, Position: 12 m, Vertical: 12 m
Satellite Info
----------------
Satellite #7, elevation 16, azimuth 123, SNR 14 *
...
```

Note Obtaining a GPS-fixed location requires a supported GPS antenna to be connected to the DIV/GPS port.

Note Obtaining a GPS-fixed location using the Standalone mode can take up to 12 minutes. This depends on the location and type of antenna used.

SMS

The SMS feature enables the router to send and receive SMS messages. This feature also enables the router to save and store the SMS messages in an FTP server.

Note SMS is enabled by default. However, you need to define the FTP server to store incoming and outgoing SMS messages.

The SMS feature provides the following commands:

Command	Syntax	Description
cellular gsm sms send	**cellular** *unit* **gsm sms send** *telNum message*	Sends SMS messages (up to 160 characters per message).
cellular gsm sms delete	**cellular** *unit* **gsm sms delete {all |** *msg_ID***}**	Deletes SMS messages.
cellular gsm sms view	**cellular** *unit* **gsm sms view {summary | all |** *msg_ID***}**	Displays SMS messages.
gsm sms archive path	**gsm sms archive path ftp:***path_to_FTP_server*	Saves SMS messages on an FTP server.

In the syntax of these commands, the value of the *unit* parameter refers to:

- (EHWIC) The router slot, WIC slot, and port separated by slashes (for example, 0/1/0).
- (C880G) The number 0.

Note You can use the call screening command **dialer caller** *number* **callback** to authenticate SMS messages that you can use to establish data connections.

This example shows how to send an SMS message (C881G-U-K9):

```
router#cellular 0 gsm sms send <phone number> "Test message"
```

This example deletes all SMS messages (EHWIC-3G-HSPA-U):

```
router#cellular 0/1/0 gsm sms delete all
```

This example shows how to display a summary of SMS messages (EHWIC-3G-HSPA-U):

```
router#cellular 0/1/0 gsm sms view summary
ID   FROM                 YY/MM/DD HR:MN:SC  SIZE  CONTENT
0    4087993680           10/05/04 21:29:55  32    from John ...
1    4087993680           10/05/04 21:52:45  32    from Jane ...
2    4087993680           10/05/04 21:56:56  32    from Jake ...
3    4087993680           10/05/04 21:56:58  32    from Tom ...
4    4087993680           10/05/04 21:57:00  32    from Sam ...
```

The following example sets FTP path to the SMS_archive directory on the FTP server at 192.168.1.3 (C881G-U-K9 and EHWIC-3G-HSPA-U):

```
router(config-controller)# gsm sms archive path
ftp://username:password@192.168.1.3/SMS_archive
```

Remotely Initiated Data Callback Using SMS

This feature remotely brings up the cellular interface by sending SMS messages over GSM networks.

Note In the example below, the phone number of the administrator who wants to remotely bring up the link using SMS is 408-123-4567 on a GSM network (`dialer caller 4081234567 callback`). Replace this number with your own number. To test this example and bring the cellular link up, send an SMS message from your phone.

This example shows how to configure this feature for EHWIC-3G-HSPA-U:

```
chat-script wcdma "" "atdt*99#" TIMEOUT 180 "CONNECT"

interface Loopback1
 ip address 1.1.1.1 255.255.255.0
interface Cellular 0/1/0
     ip address negotiated
 ip virtual-reassembly in
 encapsulation ppp
 load-interval 30
 dialer in-band
 dialer pool-member 1
 dialer idle-timeout 0
 no peer default ip address
 async mode interactive
 ppp chap hostname abc.cell.org
 ppp chap password 0 nopassword
 ppp ipcp dns request
 routing dynamic

interface Dialer1
 ip address negotiated
 encapsulation ppp
 dialer pool 1
 dialer idle-timeout 0
 dialer string wcdma
 dialer caller 4081234567 callback
 dialer-group 1
 ppp chap hostname abc.cell.org
     ppp chap password 0 nopassword
 ppp ipcp dns request

ip route 0.0.0.0 0.0.0.0 Dialer1
!
access-list 1 permit any
dialer-list 1 protocol ip list 1
!
line 0/1/0
 script dialer wcdma
 login
 modem InOut
     no exec
     transport input all
     transport output all
```

3G WWAN MIB Persistence

This feature allows you to retain 3G WWAN MIB object values and trap settings across router reloads.

Before configuring 3G WWAN MIB, you should perform some SNMP pre-configuration to avoid getting warning messages. The following is an example of SNMP pre-configuration:

```
snmp-server community public RO
snmp-server community private RW
snmp-server enable traps c3g
```

This example shows the settings that you need to configure this feature for C881G-U-K9:

```
controller Cellular 0
    gsm event rssi onset mib-trap All-gsm
    gsm event rssi onset threshold -84
    gsm event rssi abate mib-trap All-gsm
    gsm event rssi abate threshold -82
    gsm event temperature onset mib-trap
    gsm event temperature onset threshold 41
    gsm event temperature abate mib-trap
    gsm event temperature abate threshold 40
    gsm event modem-state mib-trap down
    gsm event modem-state mib-trap up
    gsm event service mib-trap
    gsm event network mib-trap
    gsm event connection-status mib-trap All-gsm
   !
```

Overview of the EHWIC-3G-HSPA-U Card

The EHWIC-3G-HSPA-U card version supports the following services:

- General Packet Radio Services (GPRS)
- Enhanced Data Rates for GSM Evolution (EDGE)
- Universal Mobile Telecommunication System (UMTS)
- High Speed Packet Access (HSPA)
  - High-speed Downlink Packet Access (HSDPA)
  - High-speed Uplink Packet Access (HSUPA)
  - HSPA Plus (HSPA+)

EHWIC-3G-HSPA-U supports multiple services on multiple bands for use in different parts of the world:

- 850/900/1800/1900 MHz for GPRS and EDGE services
- 800/850/900/1900/2100 MHz for UMTS and HSPA services
- Standalone GPS
- Short Message Service (SMS)

EHWIC-3G-HSPA-U is the Cisco part number for which the interface card is configured.

Figure 1 shows the front panel of the EHWIC-3G-HSPA-U.

Figure 1 EHWIC-3G-HSPA-U Front Panel

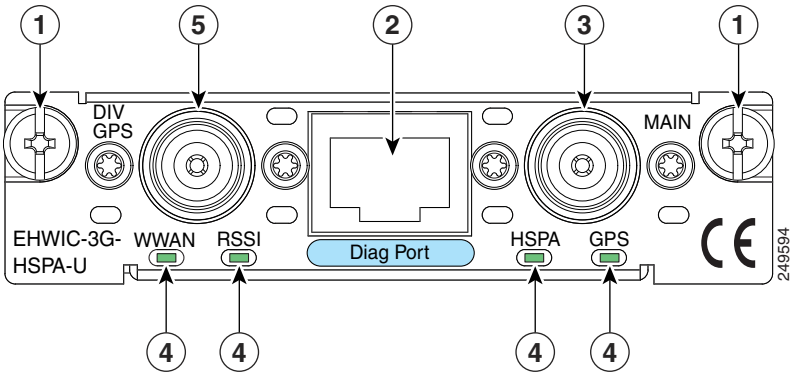

1	Mounting Screws	**4**	LEDs
2	Diagnostic Port	**5**	Diversity/GPS Antenna Connector
3	Main Antenna Connector		

Note The diagnostic port is not required for normal activation or operation. For details, see the "Modem Troubleshooting Using the Diagnostic Port" section on page 160.

EHWIC-3G-HSPA-U supports the diversity (dual antenna) mode. The types of antennas include the swivel-mounted dipole with extended base and ceiling-mounted antennas. The diversity mode requires two antennas located together and spaced a minimum of 7.5 inches (19 cm) for better RF reception.

Note By default, the diversity mode is enabled. However, it is disabled after GPS is turned on.

Table 2 describes the functions of the LEDs of EHWIC-3G-HSPA-U. The LEDs provide a visual indication of your available services.

Table 2 EHWIC-3G-HSPA-U LED Description

LED	Description
WWAN LED Modem status and data transmission	**Off**: EHWIC in reset mode or not powered.
	Slow Green Blink: Searching for service.
	Solid Green: Active service; no traffic detected.
	Fast Green Blink: Active service. Detected traffic is proportional to blink rate.
RSSI LED Received Signal Strength Indicator	**Off**: Low RSSI (under -100 dBm).
	Slow Green Blink: Low or medium RSSI (-99 to -90 dBm).
	Fast Green Blink: Medium RSSI (-89 to -70 dBm).
	Solid Green: High RSSI (-69 dBm or higher).
	Solid Yellow: No service or no RSSI detected.
HSPA LED 3G-HSPA Service Indicator	**Off**: GPRS or EDGE Service.
	Green Blink: UMTS Service.
	Solid Green: HSPA Service.
GPS LED GPS Acquisition	**Off**: Searching for signal or disabled.
	Solid Green: Signal found.

For information on how to install the EHWIC-3G-HSPA-U card in supported Cisco Access Routers, see *Installing Cisco Interface Cards in Cisco Access Routers*.

For information on how to connect the EHWIC-3G-HSPA-U card to your network, see *Connecting Cisco EHWIC-3G-HSPA-U to the Network*.

Overview of the EHWIC-3G-HSPA+7 and EHWIC-3G-HSPA+7-A

The EHWIC-3G-HSPA+7 and EHWIC-3G-HSPA+7-A cards support the following services:

- General Packet Radio Services (GPRS)
- Enhanced Data Rates for GSM Evolution (EDGE)
- Universal Mobile Telecommunication System (UMTS)
- High Speed Packet Access (HSPA)
  - High-speed Downlink Packet Access (HSDPA)
  - High-speed Uplink Packet Access (HSUPA)
- High Speed Packet Access (HSPA) +, 3GPP Revision 7
  - Downlink speeds up to 21.1 Mbps
  - Uplink speed up to 5.76 Mbps

The EHWIC-3G-HSPA+7-A is localized for AT&T. EHWIC-3G-HSPA+7 and EHWIC-3G-HSPA+7-A cards support multiple services on multiple bands for use in different parts of the world:

- 850/900/1800/1900 MHz for GPRS and EDGE services
- 800/850/900/1900/2100 MHz for UMTS and HSPA services
- Standalone GPS
- Short Message Service (SMS)

EHWIC-3G-HSPA+7 and EHWIC-3G-HSPA+7-A are the Cisco part numbers for which these cards are configured. These cards offer higher downlink and uplink throughputs and lower latency than the EHWIC-3G-HSPA-U card. The EHWIC-3G-HSPA+7-A is localized for AT&T.

The EHWIC-3G-HSPA+7 and EHWIC-3G-HSPA+7-A cards support the diversity (dual antenna) mode. Types of antennas include swivel-mounted dipole with extended base and ceiling-mounted antennas. The diversity mode requires two antennas located together and spaced a minimum of 7.5 inches (19 cm) for better RF reception.

Figure 2 shows the front panel view of the EHWIC-3G-HSPA+7 card.

Figure 2 EHWIC-3G-HSPA+7 Front Panel

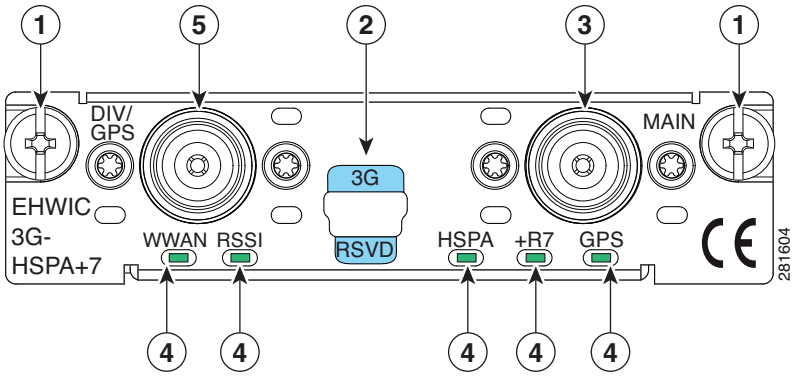

1	Mounting Screws	**4**	LEDs
2	Diagnostic Port	**5**	Diversity/GPS Antenna Connector
3	Main Antenna Connector		

Note To use the GPS feature, connect a GPS antenna to the Diversity/GPS Antenna Connector. To use the Diversity feature, connect a Diversity antenna to the Diversity/GPS Antenna Connector. You cannot use the same antenna for both features.

Figure 3 shows the front panel view of the EHWIC-3G-HSPA+7-A card.

Figure 3 EHWIC-3G-HSPA+7-A Front Panel

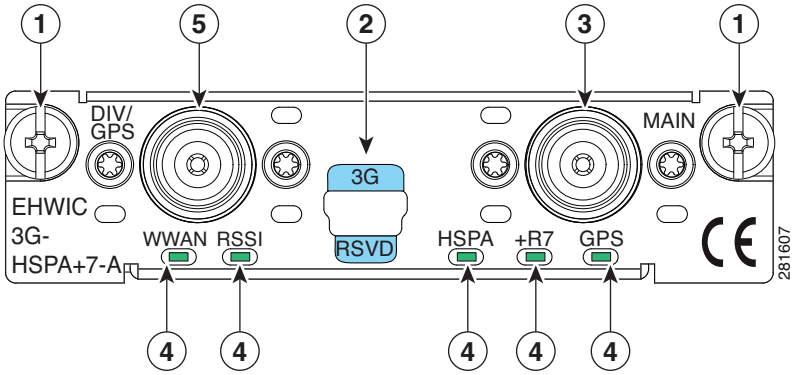

1	Mounting Screws	**4**	LEDs
2	Diagnostic Port	**5**	Diversity/GPS Antenna Connector
3	Main Antenna Connector		

Table 3 describes the LED functions of the EHWIC-3G-HSPA+7 card.

Table 3 EHWIC-3G-HSPA+7 LED Description

LED	Description
WWAN LED Modem status and data transmission	**Off**: EHWIC in reset mode or not powered.
	Slow Green Blink: Searching for service.
	Solid Green: Active service; no traffic detected.
	Fast Green Blink: Active service. Detected traffic is proportional to blink rate.
RSSI LED Received Signal Strength Indicator	**Off**: Low RSSI (under -100 dBm).
	Slow Green Blink: Low or medium RSSI (-99 to -90 dBm).
	Fast Green Blink: Medium RSSI (-89 to -70 dBm).
	Solid Green: High RSSI (-69 dBm or higher).
	Solid Yellow: No service.
HSPA LED 3G-HSPA Service Indicator	**Off**: GPRS or EDGE Service.
	Green Blink: UMTS Service.
	Solid Green: HSPA or HSPA+R7 Service.
+R7 LED	**Off**: HSPA+ Revision 7 service unavailable or not in use.
	Solid Green: HSPA+ Revision 7 service in use.
GPS LED GPS Acquisition	**Off**: Disabled or searching for satellite signal.
	Solid Green: GPS location obtained.

Note Both the HSPA LED and +R7 LEDs are lit solid green when HSPA+ Revision 7 is in use.

Figure 4 shows the top view of EHWIC-3G-HSPA+7.

Figure 4 Top View of EHWIC-3G-HSPA+7

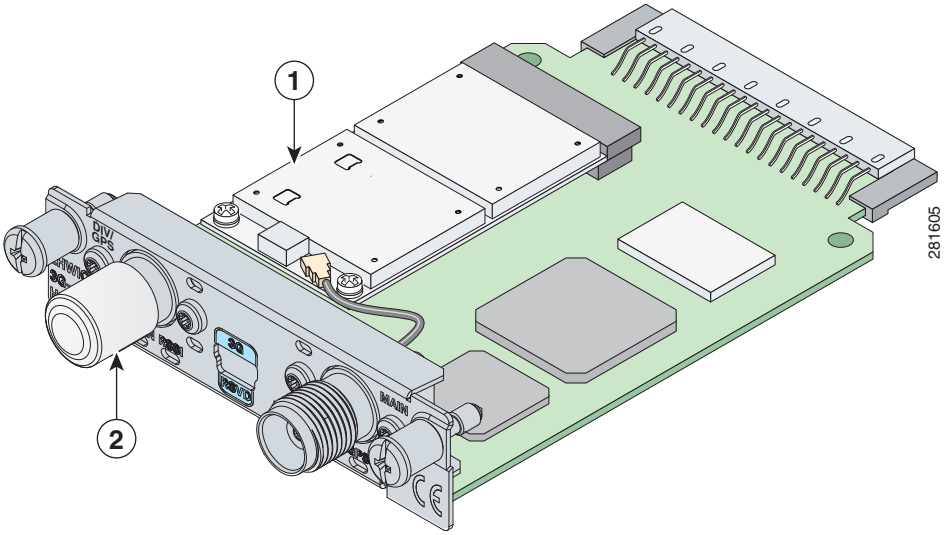

1	Cellular modem	**2**	Antenna connector cover

Figure 5 shows the bottom view of the EHWIC-3G-HSPA+7.

Figure 5 Bottom View of EHWIC-3G-HSPA+7

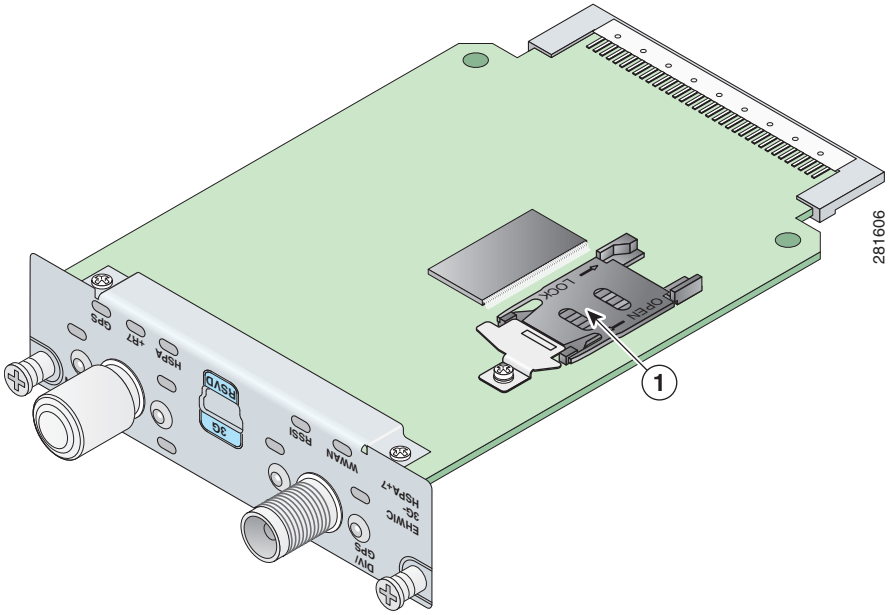

1	SIM Card Socket

Overview of the C881G-U-K9 ISR

The C881G-U-K9 ISR is a member of the Cisco 880 series data routers. These routers provide integrated Virtual Private Network (VPN), embedded Wi-Fi CERTIFIED™, 802.11b/g/n-compliant wireless Access Point (AP), 3G, and backup capabilities.

For information on configuring Cisco 880 Series ISRs, see *Cisco 880 Series Integrated Services Router Software Configuration Guide*.

C881G-U-K9 Front and Back Panels

Figure 6 shows the front panel details of the C881G-U-K9 ISR. The front panel has only LEDs. All the ports are in the back panel.

Figure 6 Front Panel of the C881G-U-K9

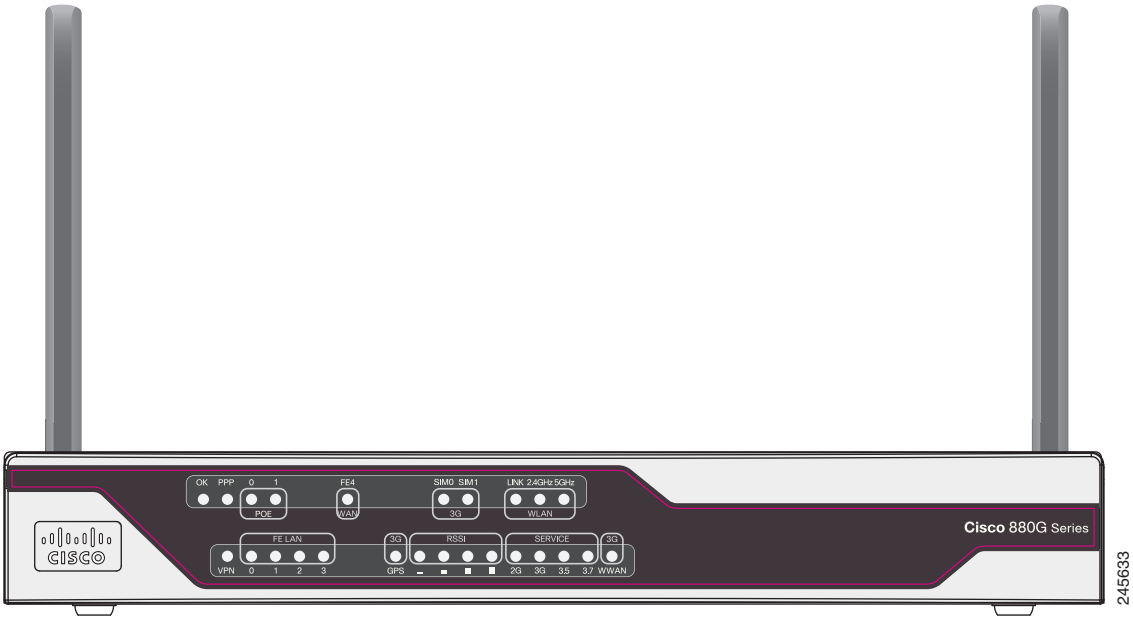

Table 4 describes the LEDs of the C881G-U-K9 ISR. The LEDs provide a visual indication of the available services.

Table 4 C881G-U-K9 LED Description

LED	Color	Description
OK (Power)	Green	On—DC power is being supplied to the router and the Cisco IOS software is running. Blinking—Bootup is in process, or the router is in ROMMON monitor mode. Off—Power is not supplied to the router.
PPP	Green	On—At least one PPP session is established. Off—No PPP session established.

Table 4 C881G-U-K9 LED Description (continued)

LED	Color	Description
POE	Green	On—PoE is connected and powered. Off—PoE is not installed.
	Amber	On—Power delivery fault with the PoE.
FE4 (WAN Port)	Green	On—Port is connected. Blinking—Data is either being received or being transmitted. Off—Port is not connected.
SIM0/SIM1	Green/Amber	Off—No SIM installed. Amber—SIM installed but not active. Green—SIM installed and active.
VPN	Green	Off—VPN is not connected. On—VPN is connected.
FE LAN (FE0:FE3)	Green	On—Ethernet port is connected. Blinking—Data is either being received or being transmitted. Off—Ethernet port is not connected.
GPS (3G)	Green (standalone GPS)	Off—GPS not configured. On—GPS configured. Blinking—Acquiring GPS data.
RSSI	Green	RSSI status shown by four LEDs [0:3]. Off [0:3]—Very low signal strength (lower than -110 dBm). On [0], Off [1:3]—Low RSSI (-110 to -90 dBm). On [0:1], Off [2:3]—Medium RSSI (-90 to -75 dBm). On [0:2], Off [3]—High RSSI (-75 to -60 dBm). On [0:3]—Very high RSSI (-60 dBm or higher).

Table 4 C881G-U-K9 LED Description (continued)

LED	Color	Description
SERVICE	Green/Amber	An array of 4 LEDs [0:3] showing the multiple service levels for each modem type. Only one LED is on at any time; the LED corresponding to the current trained-up service level. When no service can be established the Service[0] LED is illuminated Amber, regardless of signal strength. Service[0]: GPRS/EDGE (2G) Service[1]: UMTS (3G) Service[2]: HsxPA (3.5) Service[3]: Unused
WWAN (3G)	Green	Off—Module not powered. On—Module is powered on and connected but not transmitting or receiving. Slow Blinking—Module is powered on and searching for connection. Fast Blinking—Module is transmitting or receiving.

Figure 7 shows the back panel of the C881G-U-K9.

Figure 7 Back Panel of the C881G-U-K9

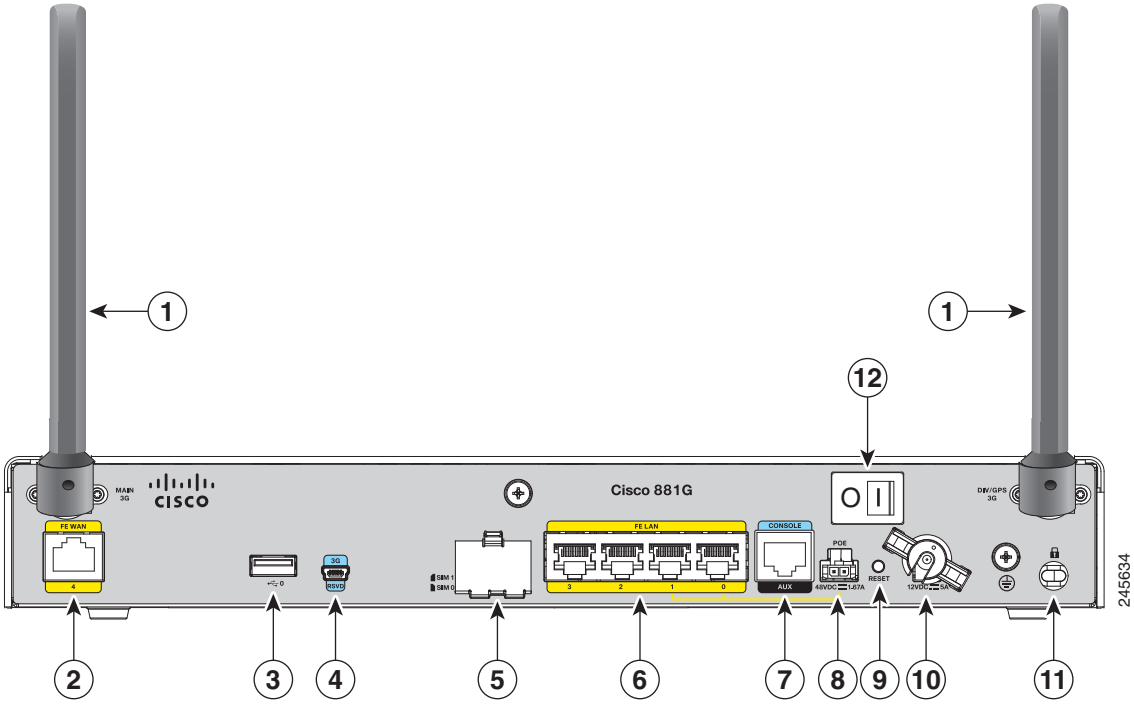

1	Antenna (the antenna on the left is the main antenna and the one on the right is the DIV/GPS antenna)—connectorized wireless WAN (WWAN) omnidirectional dipole antenna (WWAN models only)	**7**	Serial port—console or auxiliary
2	Primary WAN port—10/100 FE	**8**	PoE power connector—optional
3	USB port	**9**	Reset button
4	3G USB diagnostic port	**10**	Power connector
5	SIM 0 and SIM 1 card slots (covered by a metal door as a theft deterrent)	**11**	Kensington security slot
6	4-port 10/100 Ethernet switch	**12**	Power switch

Note Only the main antenna ships with the router.

Installing the C881G-U-K9 ISR

To install the C881G-U-K9 ISR, follow the instructions in *Cisco 860 Series, Cisco 880 Series, and Cisco 890 Series Integrated Services Routers Hardware Installation Guide*. This guide describes the equipment and the procedures for installing the Cisco 860 series, 880 series, and 890 series ISRs.

However, the instructions for connecting the 3G card in the hardware installation guide do not apply to the C881G-U-K9 ISR because it does not have a slot for adding a 3G card. Instead, a 3G modem is embedded in the router.

Installing the SIM Cards

You can install one or two SIM cards into the C881G-U-K9 ISR. Installing two SIM cards lets you take advantage of the Dual SIM feature, which provides a failover mechanism in case the primary SIM card fails.

Figure 8 shows the SIM car installation steps.

Figure 8 SIM Card Installation

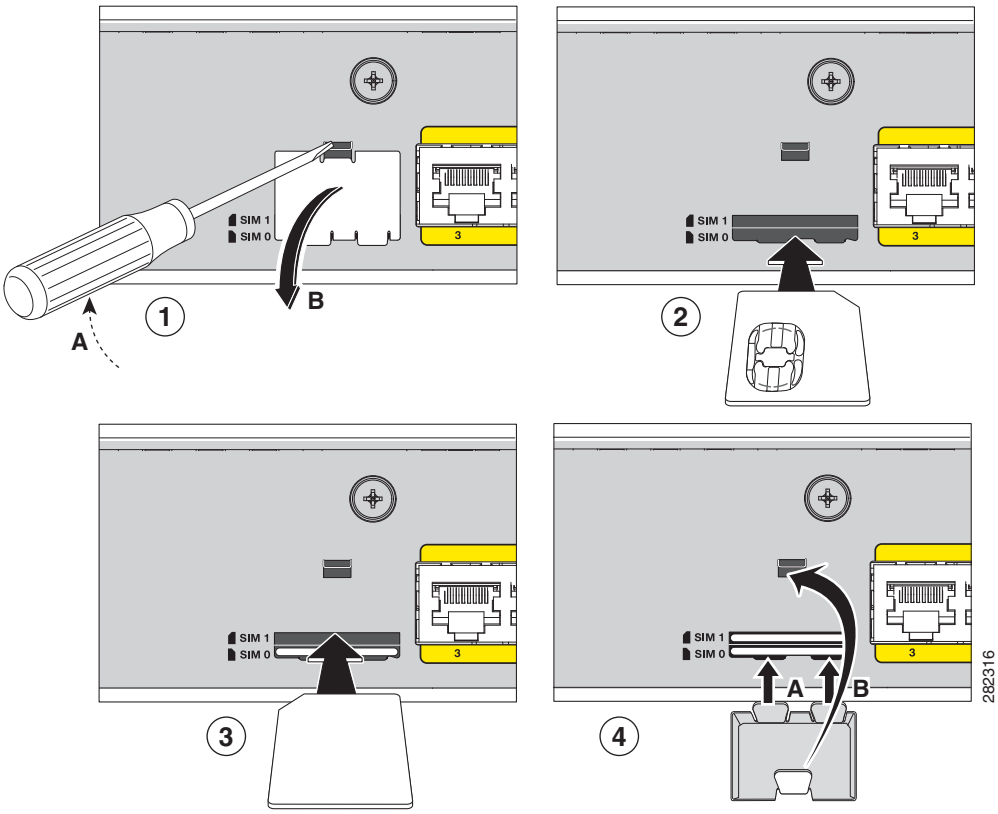

To install the SIM cards, follow these steps:

Step 1 Open the door covering the SIM card slots.

a. Insert the tip of the screw driver into the upper latch and gently disengage it as shown in the figure.

b. Remove the door as shown.

Step 2 To insert a SIM card into the SIM 0 slot, hold the SIM card with the contacts facing up as shown and gently push the card into place until it locks in.

Step 3 To insert a SIM card into the SIM 1 slot, hold the SIM card with the contacts facing down as shown and gently push the card into place until it locks in.

Step 4 Reattach the door.

a. Insert the door's bottom latches as shown.

b. Insert the door's upper latch into place as shown.

Overview of the HSPA+ Versions of the Fixed-Platform ISRs

The C881G+7-K9, C886VAG+7-K9, C887VAG+7-K9, C887VAMG+7-K9, C888EG+7-K9, C881GW+7-A-K9, C881GW+7-E-K9, C887VAGW+7-A-K9, and C887VAGW+7-E-K9 ISRs are members of the Cisco 880G series data routers. These routers provide integrated VPN, embedded Wi-Fi CERTIFIED™, 802.11b/g/n-compliant wireless AP, 3G, and backup capabilities.

For information on configuring Cisco 880 Series ISRs, see *Cisco 880 Series Integrated Services Router Software Configuration Guide*.

Front and Back Panels

Figure 9 shows the front panel details of the C881G+7-K9 ISR. The front panel has only LEDs. All the ports are in the back panel.

Figure 9 Front Panel of the C881G+7-K9 ISR

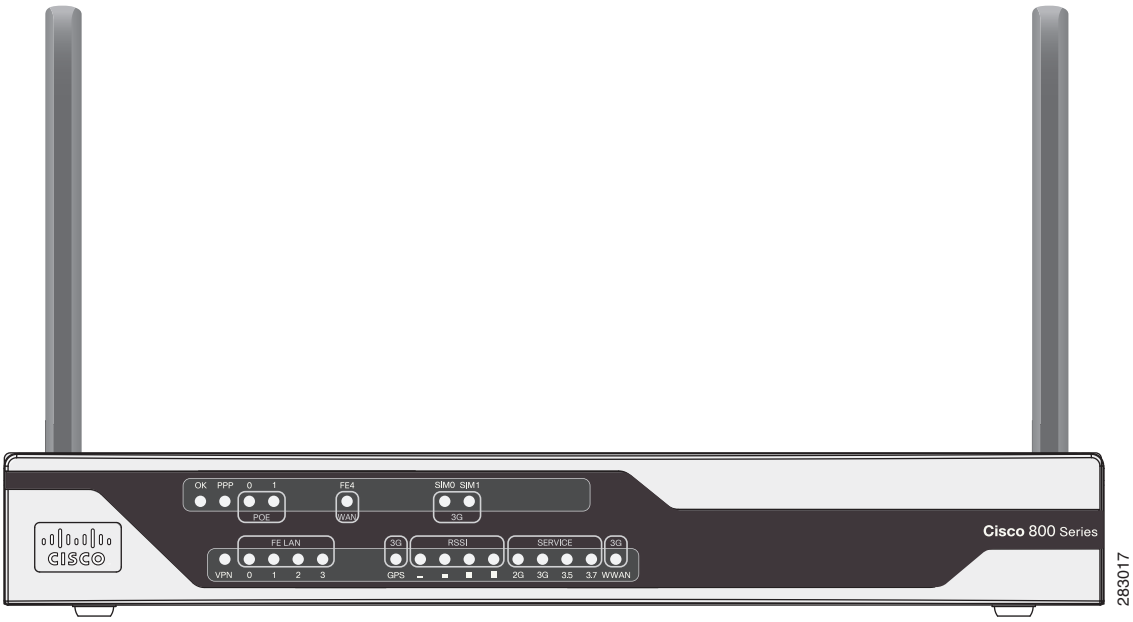

Figure 10 shows the front panel details of the C886VAG+7-K9, C887VAG+7-K9, C887VAMG+7-K9, and C888EG+7-K9 ISRs. The front panel has only LEDs. All the ports are in the back panel.

Figure 10 Front Panel of the C886VAG+7-K9, C887VAG+7-K9, C887VAMG+7-K9, and C888EG+7-K9 ISRs

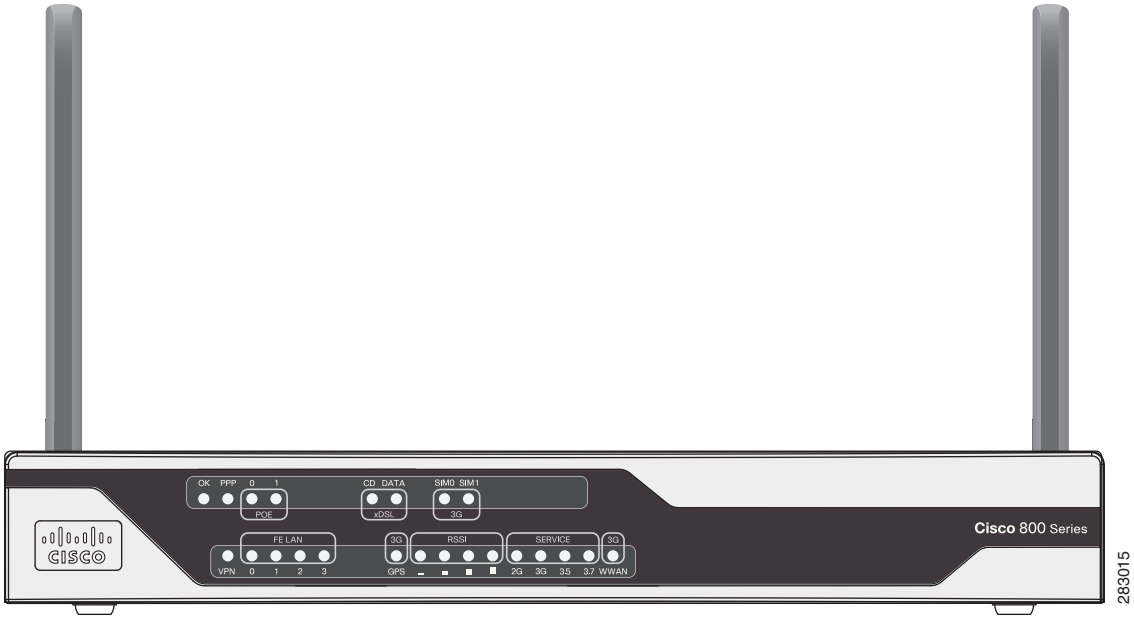

Figure 11 shows the front panel details of the C881GW+7-A-K9 and C881GW+7-E-K9 ISRs. The front panel has LEDs only. All the ports are in the back panel.

Figure 11 Front Panel of the C881GW+7-A-K9 and C881GW+7-E-K9 ISRs

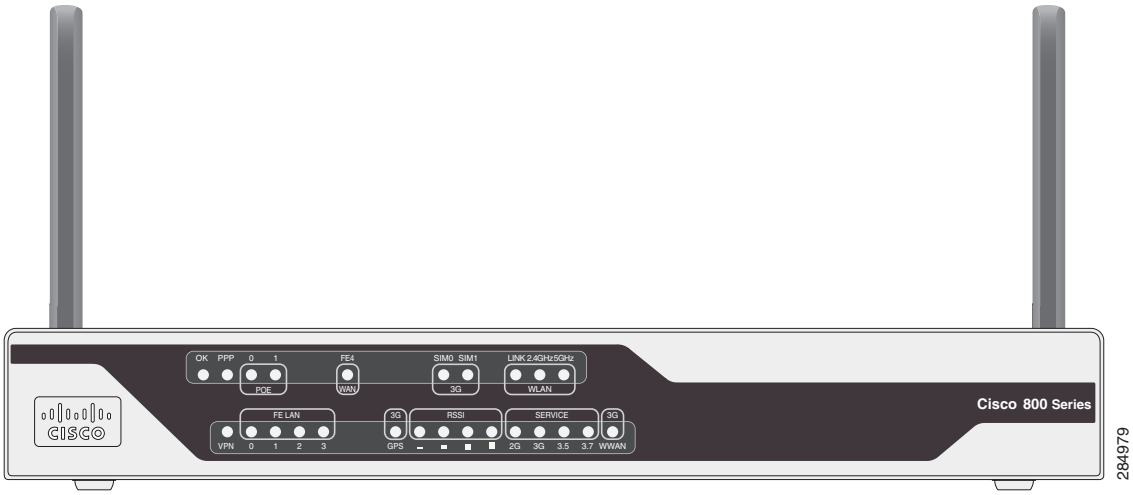

Figure 12 shows the front panel details of the C887VAGW+7-A-K9 and C887VAGW+7-E-K9 ISRs. The front panel has LEDs only. All the ports are in the back panel.

Figure 12 Front Panel of the C887VAGW+7-A-K9 and C887VAGW+7-E-K9 ISRs

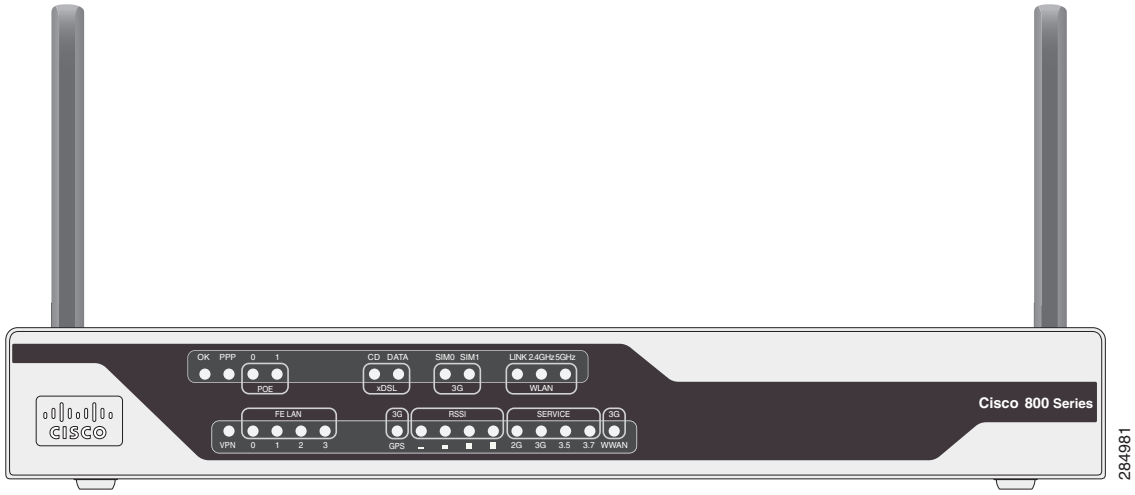

Table 5 describes the LEDs of the C881G+7-K9, C886VAG+7-K9, C887VAG+7-K9, C887VAMG+7-K9, C888EG+7-K9, C881GW+7-A-K9, C881GW+7-E-K9, C887VAGW+7-A-K9, and C887VAGW+7-E-K9 ISRs. The LEDs provide a visual indication of the available services.

Table 5 Cisco 880G for 3.7G (HSPA+)/3.5G (HSPA) LED Description

LED	Color	Description
OK (Power)	Green	On—DC power is being supplied to the router and the Cisco IOS software is running. Blinking—Bootup is in process, or the router is in ROMMON monitor mode. Off—Power is not supplied to the router.
PPP	Green	On—At least one PPP session is established. Off—No PPP session established.
POE	Green	On—PoE is connected and powered. Off—PoE is not installed.
	Amber	On—Power delivery fault with the PoE.
FE4 (WAN Port)[1]	Green	On—Port is connected. Blinking—Data is either being received or being transmitted. Off—Port is not connected.
CD (xDSL)[2]	Green	Off—Not connected. Steady On—Connected. Blink—Training.

Table 5 Cisco 880G for 3.7G (HSPA+)/3.5G (HSPA) LED Description (continued)

LED	Color	Description
DATA (xDSL)[3]	Green	Off—No data. Blink—TXD/RXD data.
SIM0/SIM1	Green/Amber	Off—No SIM installed. Amber—SIM installed but not active. Green—SIM installed and active.
WLAN (LINK)[4]	Green	On—Wireless link is up. Blinking—Ethernet link is up, and data is either being received or being transmitted. Off—Wireless link is down.
WLAN (2.4GHz/5GHz)[5]	Green	On—Radio is connected, SSID is configured, and client is associated, but no data is being received or being transmitted. Slow blinking—Radio is connected, SSID is configured, and beacons are being transmitted. Fast blinking—Data is either being received or being transmitted. Off—Radio is shut down and no SSID is configured.
VPN	Green	Off—VPN is not connected. On—VPN is connected.
FE LAN (FE0:FE3)	Green	On—Ethernet port is connected. Blinking—Data is either being received or being transmitted. Off—Ethernet port is not connected.
GPS (3G)	Green (standalone GPS)	Off—GPS not configured. On—GPS configured. Blinking—Acquiring GPS data.
RSSI	Green	RSSI status shown by four LEDs [0:3]. Off [0:3]—Very low signal strength (lower than -110 dBm). On [0], Off [1:3]—Low RSSI (-110 to -90 dBm). On [0:1], Off [2:3]—Medium RSSI (-90 to -75 dBm). On [0:2], Off [3]—High RSSI (-75 to -60 dBm). On [0:3]—Very high RSSI (-60 dBm or higher).

Table 5 Cisco 880G for 3.7G (HSPA+)/3.5G (HSPA) LED Description (continued)

LED	Color	Description
SERVICE	Green/Amber	An array of 4 LEDs [0:3] showing the multiple service levels for each modem type. Only one LED is on at any time; the LED corresponding to the current trained-up service level. When no service can be established the Service[0] LED is illuminated Amber, regardless of signal strength. Service[0]: GPRS/EDGE (2G) Service[1]: UMTS (3G) Service[2]: HsxPA (3.5) Service[3]: +7 (3.7)
WWAN (3G)	Green	Off—Module not powered. On—Module is powered on and connected but not transmitting or receiving. Slow Blinking—Module is powered on and searching for connection. Fast Blinking—Module is transmitting or receiving.

1. C881G+7-K9, C881GW+7-A-K9, and C881GW+7-E-K9 only.
2. C886VAG+7-K9, C887VAG+7-K9, C887VAMG+7-K9, C888EG+7-K9, C887VAGW+7-A-K9, and C887VAGW+7-E-K9 only.
3. C886VAG+7-K9, C887VAG+7-K9, C887VAMG+7-K9, C888EG+7-K9, C887VAGW+7-A-K9, and C887VAGW+7-E-K9 only.
4. C881GW+7-A-K9, C881GW+7-E-K9, C887VAGW+7-A-K9, and C887VAGW+7-E-K9 only.
5. C881GW+7-A-K9, C881GW+7-E-K9, C887VAGW+7-A-K9, and C887VAGW+7-E-K9 only.

Figure 13 shows the back panel of the C881G+7-K9 ISR.

Figure 13 Back Panel of the C881G+7-K9 ISR

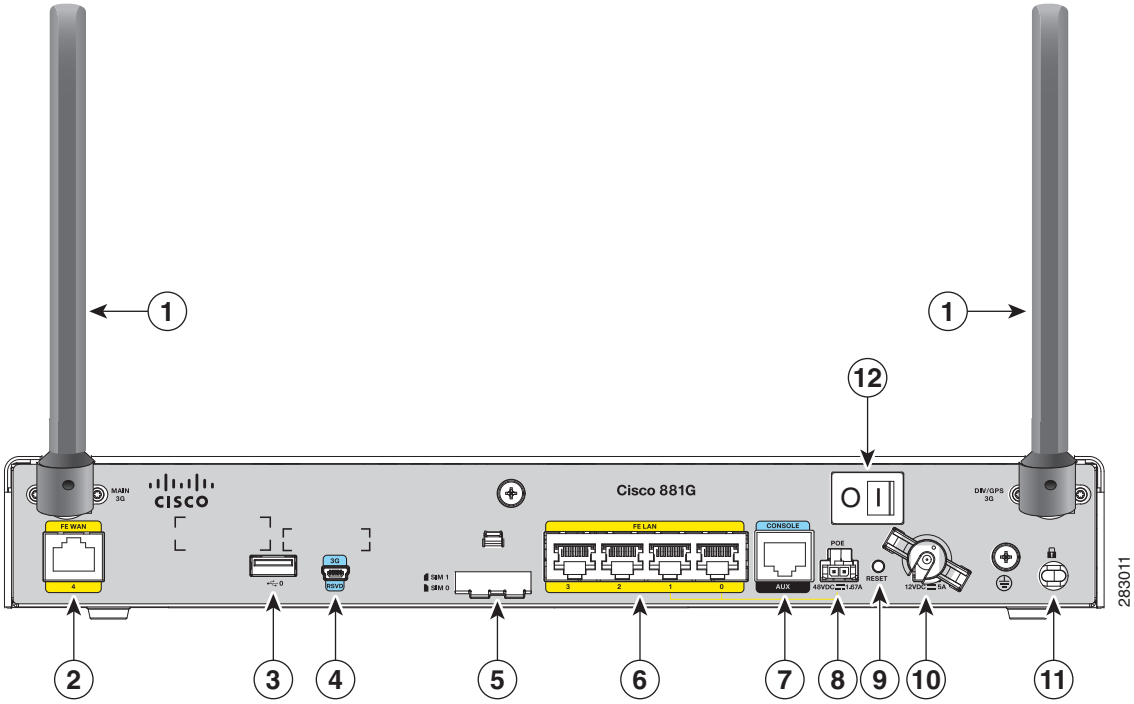

1	Antenna (the antenna on the left is the main antenna and the one on the right is the DIV/GPS antenna)—connectorized wireless WAN (WWAN) omnidirectional dipole antenna (WWAN models only)	**7**	Serial port—console or auxiliary
2	Primary WAN port—10/100 FE	**8**	PoE power connector—optional
3	USB port	**9**	Reset button
4	3G USB diagnostic port	**10**	Power connector
5	SIM 0 and SIM 1 card slots (covered by a metal door as a theft deterrent)	**11**	Kensington security slot
6	4-port 10/100 Ethernet switch	**12**	Power switch

Note Only the main antenna ships with the router.

Figure 14 shows the back panel of the C886VAG+7-K9 ISR.

Figure 14 Back Panel of the C886VAG+7-K9 ISR

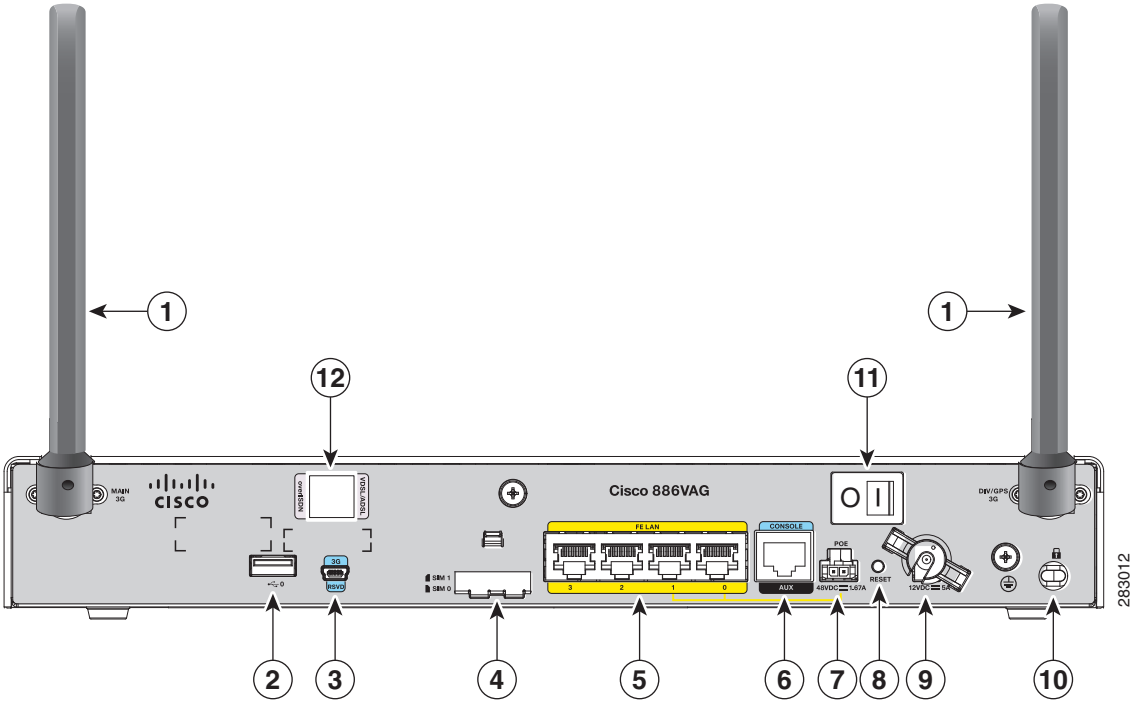

1	Antenna (the antenna on the left is the main antenna and the one on the right is the DIV/GPS antenna)—connectorized wireless WAN (WWAN) omnidirectional dipole antenna (WWAN models only)	**7**	PoE power connector—optional
2	USB port	**8**	Reset button
3	3G USB diagnostic port	**9**	Power connector
4	SIM 0 and SIM 1 card slots (covered by a metal door as a theft deterrent)	**10**	Kensington security slot
5	4-port 10/100 Ethernet switch	**11**	Power switch
6	Serial port—console or auxiliary	**12**	VDSL/ADSL port

Note Only the main antenna ships with the router.

Figure 15 shows the back panel of the C887VAMG+7-K9 ISR.

Figure 15 Back Panel of the C887VAMG+7-K9 ISR

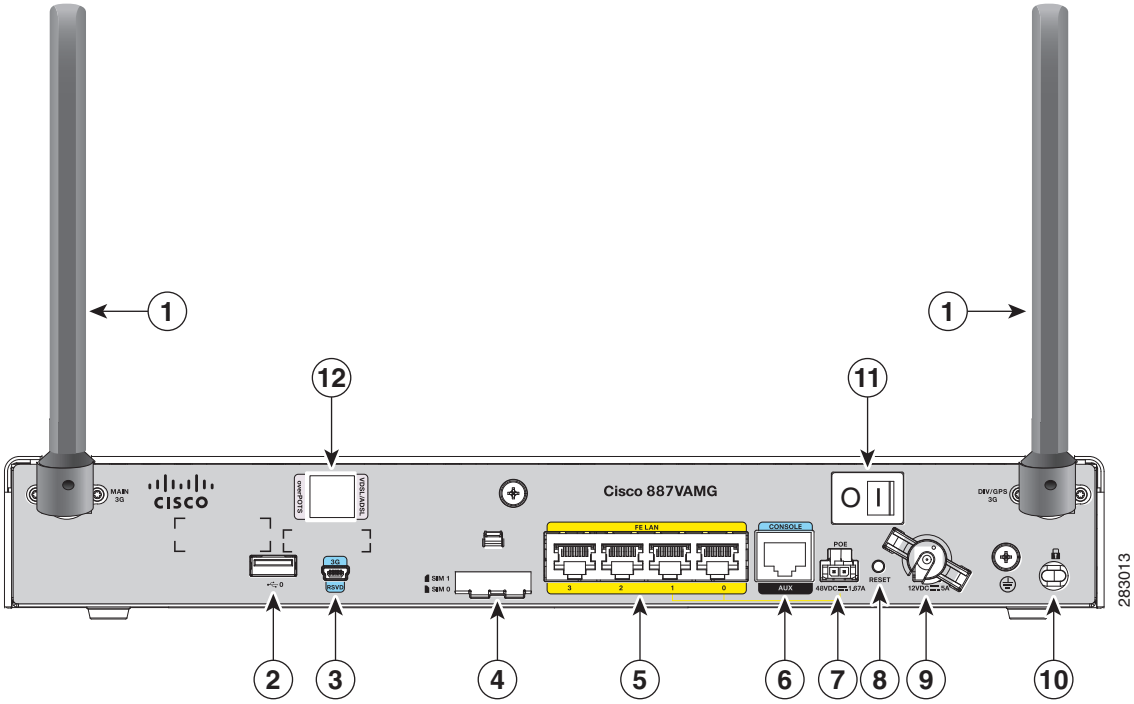

1	Antenna (the antenna on the left is the main antenna and the one on the right is the DIV/GPS antenna)—connectorized wireless WAN (WWAN) omnidirectional dipole antenna (WWAN models only)	**7**	PoE power connector—optional
2	USB port	**8**	Reset button
3	3G USB diagnostic port	**9**	Power connector
4	SIM 0 and SIM 1 card slots (covered by a metal door as a theft deterrent)	**10**	Kensington security slot
5	4-port 10/100 Ethernet switch	**11**	Power switch
6	Serial port—console or auxiliary	**12**	VDSL/ADSL port

Note Only the main antenna ships with the router.

Figure 16 shows the back panel of the C888EG+7-K9 ISR.

Figure 16 Back Panel of the C888EG+7-K9 ISR

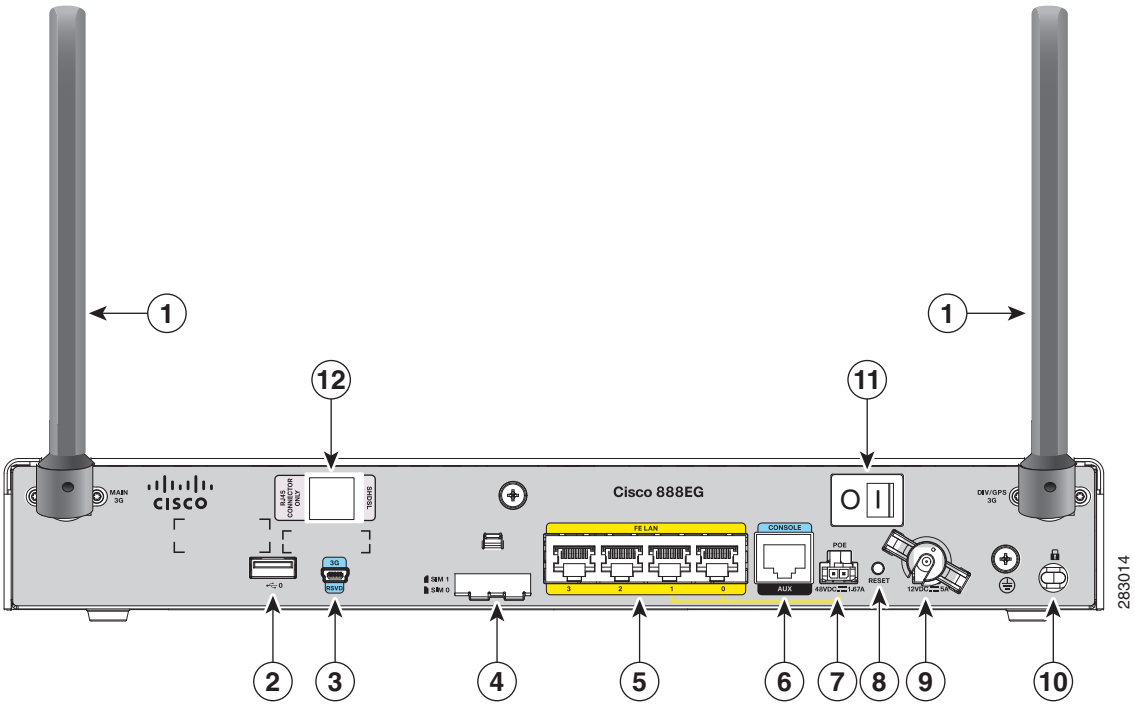

1	Antenna (the antenna on the left is the main antenna and the one on the right is the DIV/GPS antenna)—connectorized wireless WAN (WWAN) omnidirectional dipole antenna (WWAN models only)	**7**	PoE power connector—optional
2	USB port	**8**	Reset button
3	3G USB diagnostic port	**9**	Power connector
4	SIM 0 and SIM 1 card slots (covered by a metal door as a theft deterrent)	**10**	Kensington security slot
5	4-port 10/100 Ethernet switch	**11**	Power switch
6	Serial port—console or auxiliary	**12**	SHDSL port

Note Only the main antenna ships with the router.

Figure 17 shows the back panel of the C881GW+7-A-K9 and C881GW+7-E-K9 ISRs.

Figure 17 Back Panel of the C881GW+7-A-K9 and C881GW+7-E-K9 ISRs

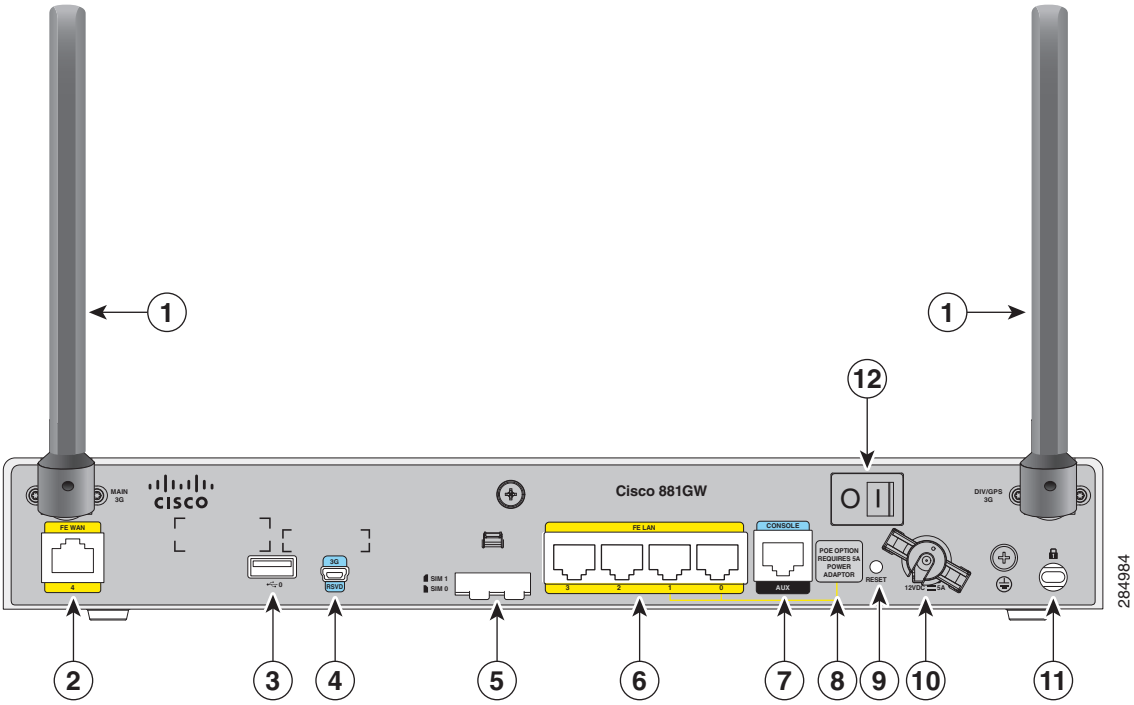

1	Antenna (the antenna on the left is the main antenna and the one on the right is the DIV/GPS antenna)—connectorized wireless WAN (WWAN) omnidirectional dipole antenna (WWAN models only)	**7**	Serial port—console or auxiliary
2	Primary WAN port—10/100 FE	**8**	**Note** No separate PoE power supply is required for routers with embedded WLAN antennas. For information on system power supply requirements when PoE is enabled, see the Power over Ethernet Module section of *Cisco 860 Series, Cisco 880 Series, and Cisco 890 Series Integrated Services Routers Hardware Installation Guide*.
3	USB port	**9**	Reset button
4	3G USB diagnostic port	**10**	Power connector
5	SIM 0 and SIM 1 card slots (covered by a metal door as a theft deterrent)	**11**	Kensington security slot
6	4-port 10/100 Ethernet switch	**12**	Power switch

Note Only the main antenna ships with the router.

Figure 18 shows the back panel of the C887VAGW+7-A-K9 and C887VAGW+7-E-K9 ISRs.

Figure 18 Back Panel of the C887VAGW+7-A-K9 and C887VAGW+7-E-K9 ISRs

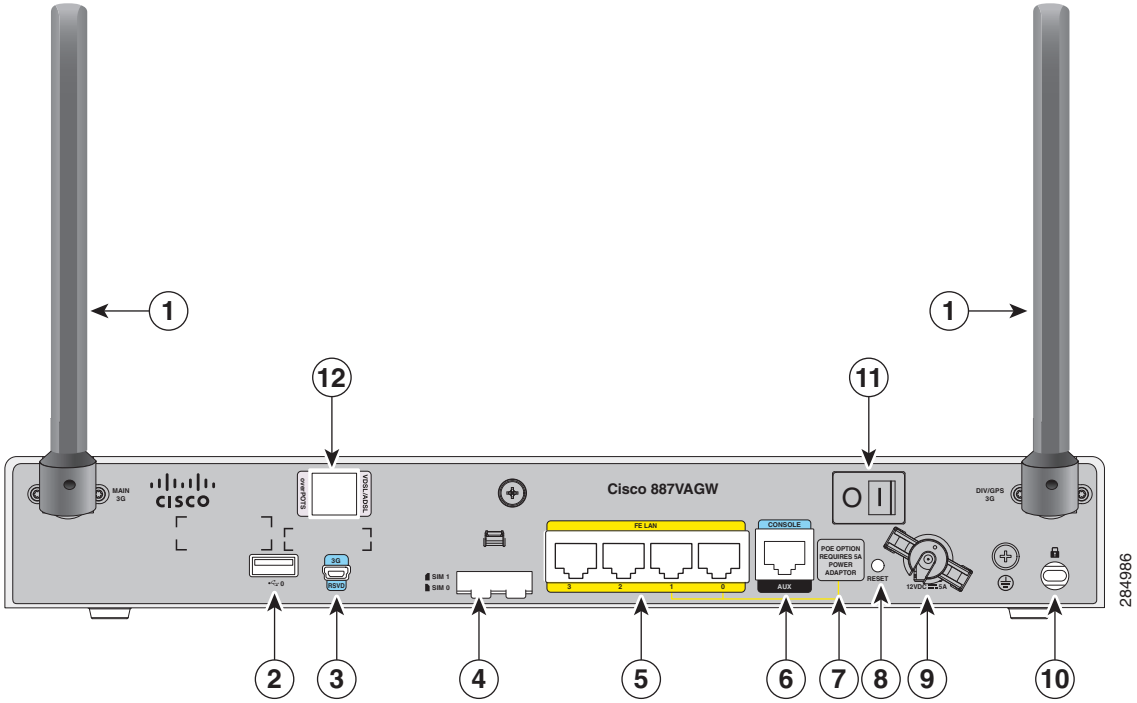

1	Antenna (the antenna on the left is the main antenna and the one on the right is the DIV/GPS antenna)—connectorized wireless WAN (WWAN) omnidirectional dipole antenna (WWAN models only)	**7**	**Note** No separate PoE power supply is required for routers with embedded WLAN antennas. For information on system power supply requirements when PoE is enabled, see the Power over Ethernet Module section of *Cisco 860 Series, Cisco 880 Series, and Cisco 890 Series Integrated Services Routers Hardware Installation Guide*.
2	USB port	**8**	Reset button
3	3G USB diagnostic port	**9**	Power connector
4	SIM 0 and SIM 1 card slots (covered by a metal door as a theft deterrent)	**10**	Kensington security slot
5	4-port 10/100 Ethernet switch	**11**	Power switch
6	Serial port—console or auxiliary	**12**	VDSL/ADSL port

Note Only the main antenna ships with the router.

Installing the Cisco 880G for 3.7G (HSPA+)/3.5G (HSPA) ISRs

To install the C881G+7-K9, C886VAG+7-K9, C887VAG+7-K9, C887VAMG+7-K9, C888EG+7-K9, C881GW+7-A-K9, C881GW+7-E-K9, C887VAGW+7-A-K9, and C887VAGW+7-E-K9 ISRs, follow the instructions in *Cisco 860 Series, Cisco 880 Series, and Cisco 890 Series Integrated Services Routers Hardware Installation Guide*. This guide describes the equipment and the procedures for installing the Cisco 860 series, 880 series, and 890 series ISRs.

However, the instructions for connecting the 3G card in the hardware installation guide do not apply because these ISRs do not have a slot for adding a 3G card. Instead, a 3G modem is embedded in the router.

Supported Cisco Antennas and Cables

Table 6 lists the Cisco antennas that are supported for use with 3G EHWICs and C880G ISRs.

Table 6 Supported Cisco Antennas (3G EHWIC cards and C880G ISRs)

Cisco Part Number	Antenna Type	Maximum Gain and Frequency Range	Description
3G-ANTM1916-CM	High-gain ceiling-mount omnidirectional	1.5 dBi (806–960 MHz) 2.5 dBi (1710–2170 MHz)	Multiband ceiling-mounted omnidirectional antenna. For more information, see *Cisco Multiband In-Building Omnidirectional Ceiling-Mount Antenna (3G-ANTM1916-CM)*.
3G-ANTM1919D	Dipole omnidirectional	0 dBi (806–960 MHz) 0 dBi (1710–2170 MHz)	This is the default antenna. Multiband dipole antenna. For more information, see *Cisco Multiband Swivel-Mount Dipole Antenna (3G-ANTM1919D)*.
3G-AE015-R (Antenna Extension)	Extension base	0.8–6.0 GHz	This antenna extension is a base with a 15-foot cable included for use with a dipole omnidirectional antenna. For more information, see *Cisco Single-Port Antenna Stand for Multiband TNC Male-Terminated Portable Antenna (Cisco 3G-AE015-R)*.
3G-AE010-R (Antenna Extension)	Extension Base	0.8–6.0 GHz	This is the default antenna extension. This antenna extension is a base with a 10-foot cable included for use with dipole omnidirectional antennas. For more information, see *Cisco Single-Port Antenna Stand for Multiband TNC Male-Terminated Portable Antenna (Cisco 3G-AE015-R)*. This document applies to both 3G-AE015-R and 3G-AE010-R. The only difference between these two products is the length of the cable.
3G-ANTM-OUT-OM	Outdoor Omnidirectional	+2 dBi 800/900 MHz +4 dBi 1800/1900/2100 MHz	This is an outdoor low profile omnidirectional mast antenna. For more information, see *Cisco 3G Omnidirectional Outdoor Antenna (3G-ANTM-OUT-OM)*.
3G-ANTM-OUT-LP	Low Profile Stick Antenna	- 1.5 dBi 850, 900 MHz - 2.5 dBi 1800, 1900, 2100 MHz	This is an omnidirectional stick antenna. For more information, see *Cisco Multiband Omnidirectional Panel-Mount Antenna (3G-ANTM-OUT-LP)*

Table 6 Supported Cisco Antennas (3G EHWIC cards and C880G ISRs) (continued)

Cisco Part Number	Antenna Type	Maximum Gain and Frequency Range	Description
3G-ACC-OUT-LA (Lightning Arrestor)	Lightning Arrestor	800 MHz to 2200 MHz	This is a quarter-wave lightning protector with integrated high-pass filter. For more information, see *Cisco 3G Lightning Arrestor (3G-ACC-OUT-LA)*
3G-ACC-OUT-COMBO	Lightning Arrestor and antenna	N/A	Multi-Band Outdoor Omnidirectional Antenna Mast/Wall Mount (3G-ACC-OUT-OM) and 3G Outdoor Antenna Lightning Arrestor (3G-ACC-OUT-LA)
4G-ANTM-OM-CM	Low Profile Surface Mount Omnidirectonal	698 MHz–2690 MHz	This is a ceiling mount omnidirectional antenna that can be used in any of the 3G or 4G bands (that is, any of the 700/800/900/1700/1800/1900/2100/2600 MHz bands). For more information, see *Cisco 4G Indoor Ceiling-Mount Omnidirectional Antenna (4G-ANTM-OM-CM)*.

Table 7 lists insertion loss information for the ultra-low-loss (ULL) LMR 400 extension cables available from Cisco for use with 3G antennas.

Table 7 Cisco Extension Cables for Use with Antennas

Cisco Product Number	Cable Length	Insertion Loss	Frequency (MHz)
3G-CAB-ULL-20	20 ft (6 m)	1.50 dB max.	2100
3G-CAB-ULL-50	50 ft (15 m)	3.50 dB max.	2100
3G-CAB-LMR240-25	25 ft (7.5 m)	3.50 dB max.	2200
3G-CAB-LMR240-50	50 ft (15 m)	6.90 dB max.	2200
3G-CAB-LMR240-75	75 ft (23 m)	10.5 dB max.	2200

Note You can use the RG-174/U type cables to adapt the modem external antenna connection to any of the EHWIC cables and antennas.

Figure 19 and Figure 20 show some antenna options that can be used with C880G ISRs and routers with 3G EHWIC cards.

Figure 19 Antenna Options

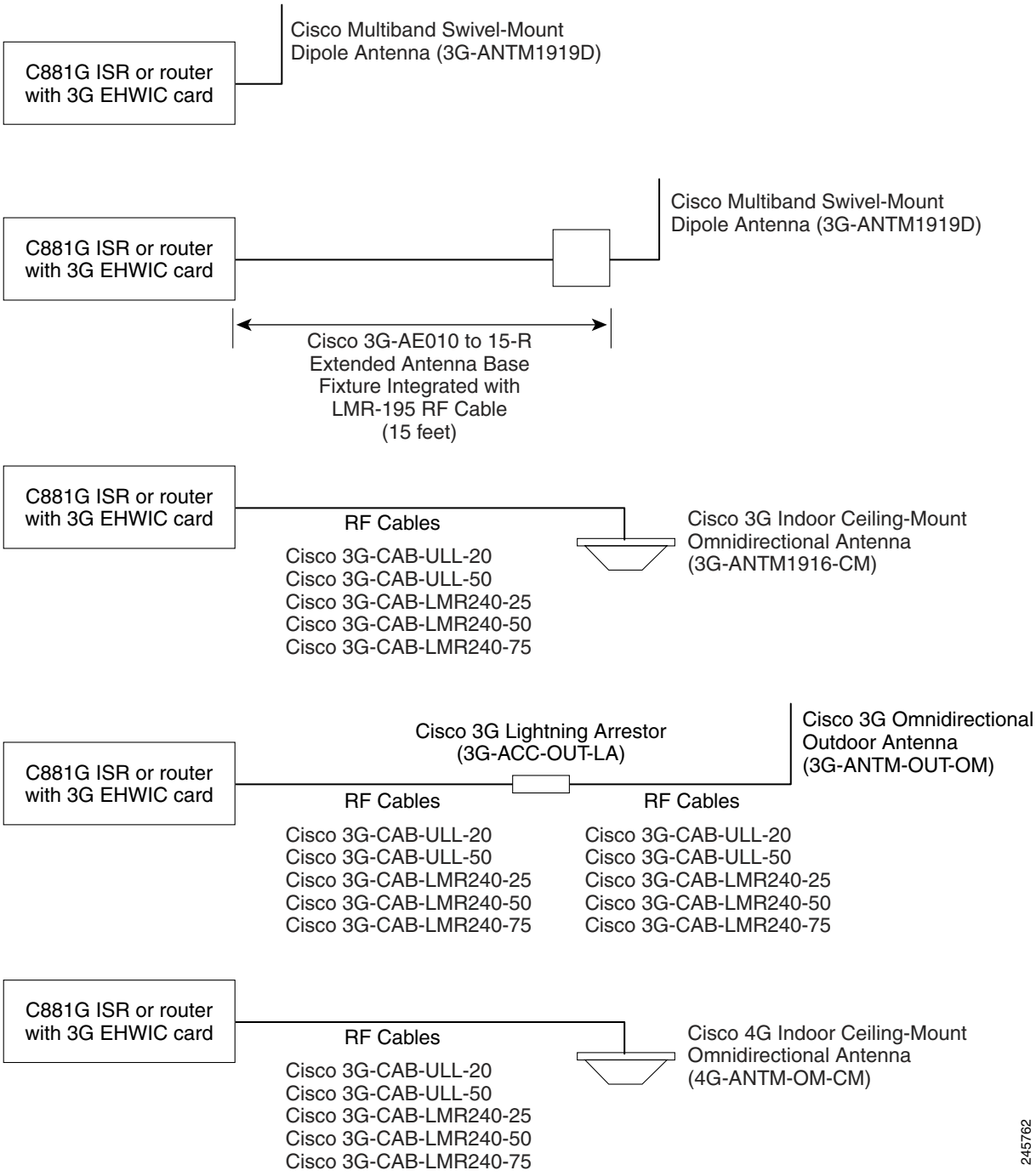

Figure 20 Antenna Options

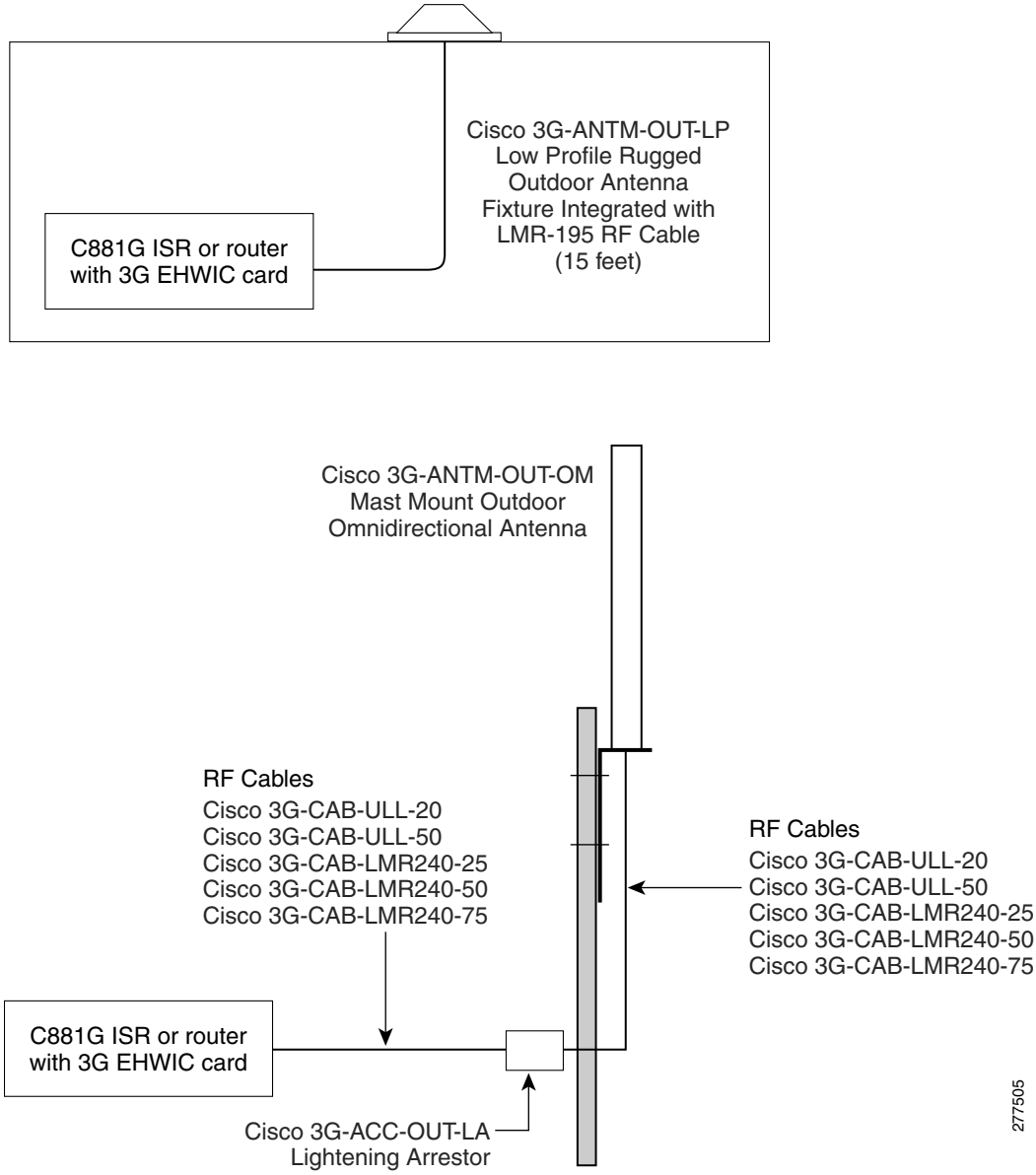

Note Antenna orientation can increase or decrease signal reception due to polarization. Typically, an SP's transmitting antenna on the BTS is a vertically polarized omnidirectional antenna, which means the electromagnetic waves are transmitted from it in a vertical plane. Hence, the receiving antenna needs to be vertically oriented too in order to receive the best signal. As the angle of the antenna orientation is changed from vertical to horizontal, only an angular component of the signal is picked up by the antenna. Therefore, if the antenna orientation is horizontal, the antenna picks up the least signal. The signal is received by the antenna as a result of it bouncing off of reflective surfaces. Hence, depending on where the antenna is placed, it may receive different signal strengths. However, the recommended position is *vertical*.

Configuring Cisco EHWIC and 880G for 3.7G (HSPA+)/3.5G (HSPA)

- Configuration Prerequisites, page 40
- Restrictions for Configuring 3G, page 41
- Overview of UMTS/GSM Data Network, page 41
- Multiple PDP contexts, page 43
- Overview of SNMP MIBs, page 43
- Configuring 3G, page 48

Configuration Prerequisites

The following are prerequisites for configuring Cisco EHWIC and 880G for 3.7G (HSPA+)/3.5G (HSPA):

- You must have service availability on your EHWIC card or C801G ISR from a carrier. In addition, you must have network coverage at your router's location. For a complete list of supported carriers, see the data sheet at:

  http://www.cisco.com/go/3g
- You must subscribe to a service plan with a wireless service provider.
- You must obtain and install a SIM card before configuring the EHWIC cards. For instructions on how to install the SIM card, see *Connecting Cisco EHWIC-3G-HSPA-U, EHWIC-3G-HSPA+7, and EHWIC-3G-HSPA+7-A to the Network*. In the case of C881G-U-K9, obtain and install one or two SIM cards as described in the "Installing the SIM Cards" section on page 22.
- You must install the required antennas before you configure the EHWIC cards. For more information, see Table 6.
- You must check your LEDs for signal reception as described in Table 2.
- You should be familiar with the Cisco IOS software, beginning with Release 15.1(3)T or later. (See the Cisco IOS documentation).
- To configure your 3G data profile, you need the following information from your service provider:
  - Username (if required by your carrier)
  - Password (if required by your carrier)
  - Access Point Name (APN)

Restrictions for Configuring 3G

The following restrictions apply to configuring the Cisco 3G EHWIC cards and C880G ISRs:

- Data connection—Data connection can be originated only by the 3G EHWIC card or the 3G modem in the C880G ISR.
- Throughput—Due to the shared nature of wireless communications, the experienced throughput varies depending on the number of active users or congestion in a given network.
- Latency—Cellular networks have higher latency compared to wired networks. Latency rates depend on the technology and carrier. Latency may be higher because of network congestion.
- Carrier restrictions—Any restrictions that are a part of the terms of service from your carrier.
- Performance—Multiple PDP contexts are supported only in the EHWIC card. This requires an additional 2 Mb memory.

Overview of UMTS/GSM Data Network

The Global System for Mobile Communications (GSM) is the most widely deployed cellular network in the world. It is based on the specification from European Telecommunications Standards Institute (ETSI).

GSM was primarily designed for voice and was circuit switched but due to the popularity of cellular networks and the great demand for data services, GPRS was introduced as a packet switched data overlay over the GSM radio network.

The radio and network resources of GPRS are accessed only when data actually needs to be transmitted between the GPRS mobile user and the GPRS network.

GPRS introduced several new network nodes into the GSM architecture for packet switching, they form the Mobile Packet Core. The Mobile Packet Core includes the Serving GPRS Support Node (SGSN) and the GPRS Gateway Support Node (GGSN).

The SGSN is the node that in some ways carries out the same function as the Foreign Agent in Mobile IP. It tunnels IP packets towards the GGSN and detunnels packets back from the GGSN. It also carries out mobility managed and billing.

The GGSN is the node which carries out the role in GPRS equivalent to the Home Agent in Mobile IP. The GGSN provides the connectivity to the IP network and the SGSN. It is responsible for IP address assignment and is the default router for the connected User Equipment (UE).

Figure 21 shows a GSM network and the network elements it contains.

Figure 21 GSM Network Overview

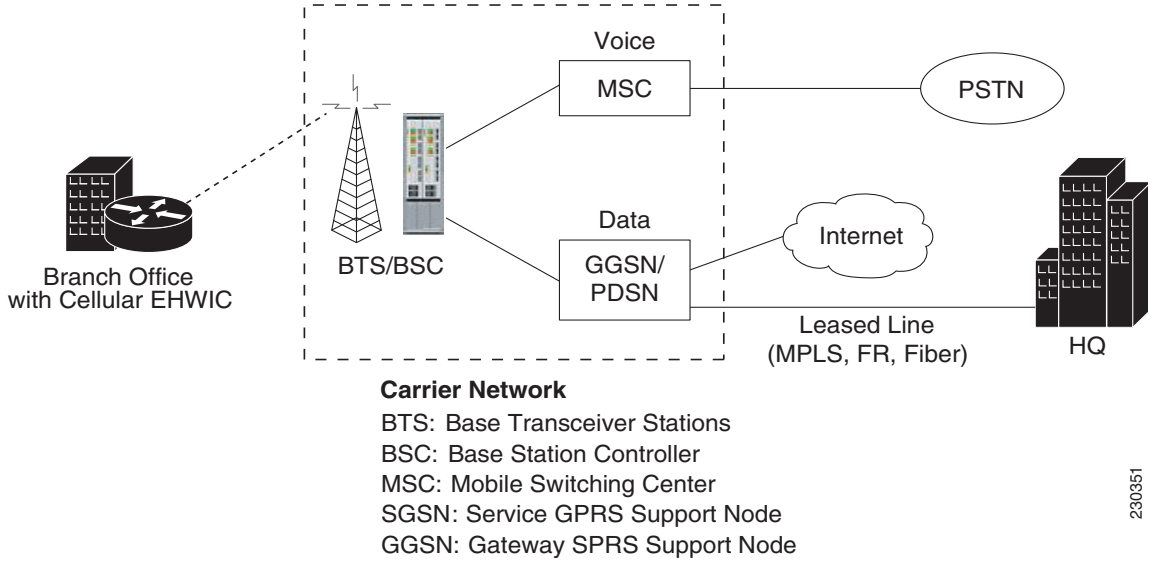

The Base Transceiver Station (BTS) and Base Station Controller (BSC) are located at the Cell site and are the common nodes for both voice and data services. They provide the radio or the physical layer connectivity between the mobile user and the mobile network.

As the BSC voice and data traffic get segregated, the voice traffic goes to the Mobile Switching Center (MSC), while the data traffic is sent to the GGSN. From the GGSN, the data packets either go directly to the internet or they can be backhauled to the customer data center for a VPN connection.

UMTS is a 3G wireless system that delivers high-bandwidth data and voice services to mobile users. UMTS evolved from GSM. UMTS has a new air interface based on GSM and an IP core network based on general-packet radio service (GPRS). The nodes in a UMTS network are almost the same as in a GSM/GPRS network.

BTS and BSC have been renamed to Node B and Radio Network Controller (RNC), respectively. UMTS addresses the growing demand of mobile and Internet applications for new capacity in the overcrowded mobile communications sky. The new network increases transmission speed to 2 Mb/s per mobile user and establishes a global roaming standard.

High Speed Packet Access (HSPA) is a collection of two mobile protocols, High Speed Downlink Packet Access (HSDPA) and High Speed Uplink Packet Access (HSUPA), that extend and improve the performance of existing CDMA/UMTS protocols.

HSDPA and HSUPA provide increased performance by using improved modulation schemes and by refining the protocols by which 3G modem and base stations communicate. These improvements lead to a better utilization of the existing radio bandwidth provided by CDMA.

HSPA improves the end-user experience by increasing peak data rates of up to 14 Mb/s in the downlink and 5.76 Mb/s in the uplink. It also reduces latency and provides up to five times more system capacity in the downlink and up to twice as much system capacity in the uplink, reducing the production cost per bit compared to original CDMA protocols.

Multiple PDP contexts

The dual primary PDP contexts feature is supported on the EHWIC3.7G (HSPA+)/3.5G (HSPA) cards.

Each PDP context is the separate data link over common 3G data connection. It has its own IP address and its own data and QoS profile. For each PDP context, the new IOS cellular interface is created once the EHWIC is initialized in the system. In addition to that, each cellular interface has a corresponding TTY line. This is similar to HWICs with multiple ports.

The EHWIC3.7G (HSPA+)/3.5G (HSPA) cards have Cellular 0/<ehwic_slot>/0, Cellular 0/<ehwic_slot>/1, IOS interfaces. The last number in the triple numbering scheme is the port number.

The multiple cellular interfaces in these 3G HWIC cards behave independently. Any of them can be used to establish data connection. However, only the first interface (for example, Cellular 0/<ehwic_slot>/0), can be used to exercise the full set of modem AT commands using the Reverse Telnet feature.

The HSPA/HSPA+ cellular modem allows you to configure up to16 profiles. The QoS profile configured for an interface is selected by the **ATDT*98*#<profile_number>#...“CONNECT”** (HSPA modem) or **AT!SCACT=1,<profile_number>...“OK”** (HSPA+ modem) command in the chat script corresponding to a cellular interface. You must use a different data profile for each cellular interface.

Note If all the three interfaces are used, you must create three separate chat scripts in the router configuration.

Overview of SNMP MIBs

Simple Management Network Protocol (SNMP) development and use is centered around the MIB. An SNMP MIB is an abstract database, a conceptual specification for information that a management application may read and modify in a certain form.

This does not imply that the information is kept in the managed system in that same form. The SNMP agent translates between the internal data structures and formats of the managed system and the external data structures and formats defined for the MIB.

The SNMP MIB is conceptually a tree structure with conceptual tables. For more informtaion on Cisco 3G MIB, see the “3G Cellular WAN MIB Architecture” section on page 44. Relative to this tree structure, the term MIB is used in two senses. In one sense, it is actually a MIB branch, usually containing information for a single aspect of technology, such as a transmission medium or a routing protocol.

A MIB used in this sense is more accurately called a MIB module and is usually defined in a single document. In the other sense, a MIB is a collection of such branches. Such a collection might comprise, for example, all the MIB modules implemented by a given agent or the entire collection of MIB modules defined for SNMP.

A MIB is a tree where the leaves are individual items of data called objects. An object may be, for example, a counter or a protocol status. MIB objects are also sometimes called variables.

MIBs can be classified into three categories:

- IF MIBs—Describe interface statistics.
- Cisco-Entity-Vendortype-OID-MIB.my—ENTITY-MIBs are used to provide general hardware type for both the EHWIC and the modem. CISCO-ENTITY-VENDORTYPE-OID-MIB assigns OIDs for Cisco components (including the HWICs and the modems). The OIDs are then used as the values of entPhysicalVendorType in the ENTITY-MIB.
- Cisco 3G WAN MIBs—cellular or wireless-specific MIBs.

3G Cellular WAN MIB Architecture

This section describes the MIB definition and implementation support for Cisco's cellular 3G WAN products on the customer premises equipment (CPE) end.

The 3G Cellular WAN MIB supports the CDMA and GSM set of cellular standards and includes the following technologies:

- GSM—GPRS/EDGE/UMTS/HSPA
- CDMA—1xRTT/EVDO RevA/EVDO RevB

The 3G cellular MIB uses indexes from the cellular interface and from the modem. You can obtain the interface index using IF MIBs and the modem index using the ENTITY MIBs.

The 3G MIB definition includes the following major sub-trees:

- Common objects
- CDMA objects
- GSM objects
- Traps or notifications

You can use MIB object c3gStandard defined in the c3gWanCommonTable to distinguish between CDMA or GSM and implementing MIB for CDMA or GSM.

Note Cisco 3G MIB supports all SNMP versions including V1, V2, V2C, and V3.

At a high-level architecture, the Cisco 3G WAN MIBs are divided into two groups and have the following structure:

1. ciscoWan3gMIBObjects—This group defines all the MIB objects for Cisco 3G WAN MIBs.
2. ciscoWan3gMIBNotifs—This group defines all the trap events for Cisco 3G WAN MIBs.

ciscoWan3gMIBObjects

The ciscoWan3gMIBObjects group has the following sub-groups:

- c3gWanCommonTable—Defines the common MIB objects for both CDMA and GSM.
- c3gWanCdma—Defines the MIB objects specific for a CDMA set of standards (3GPP2).
- c3gWangsm—Defines the MIB objects specific for a GSM set of standards (3GPP).
- c3gWanLbs—Defines the MIB objects specific for GPS.
- c3gWanSms—Defines the MIB objects specific for SMS.

c3gWanCdma

Under c3gWanCdma, there are seven sub-groups:

- c3gCdmaSessionTable for CDMA session-related objects.
- c3gCdmaConnectionTable for CDMA connection-related objects.
- c3gCdmaIdentityTable for CDMA user identity-related objects.
- c3gCdmaNetworkTable for CDMA network-related objects.
- c3gCdmaProfile for CDMA user profile-related objects.

- c3gCdmaRadio for CDMA radio-related objects.
- c3gCdmaSecurityTable for CDMA security-related objects.

c3gWangsm

Under c3gWANgsm, there are five sub-groups:

- c3ggsmIdentityTable for GSM user identity-related objects.
- c3ggsmNetworkTable for GSM network-related objects.
- c3ggsmPdpProfile for GSM PDP profile-related objects.
- c3ggsmRadio for GSM radio-related objects.
- c3ggsmSecurityTable for GSM security-related objects.

c3gWanLbs

The following is a list of the MIB objects under c3gWanLbs:

- c3gLbsModeSelected,
- c3gLbsState,
- c3gLbsLocFixError,
- c3gLbsLatitude,
- c3gLbsLongitude,
- c3gLbsTimeStamp,
- c3gLbsLocUncertaintyAngle,
- c3gLbsLocUncertaintyA,
- c3gLbsLocUncertaintyPos,
- c3gLbsFixtype,
- c3gLbsHeightValid,
- c3gLbsHeight,
- c3gLbsLocUncertaintyVertical,
- c3gLbsVelocityValid,
- c3gLbsHeading,
- c3gLbsVelocityHorizontal,
- c3gLbsVelocityVertical,
- c3gLbsHepe,
- c3gLbsNumSatellites,
- c3gWanLbsSatelliteNumber,
- c3gWanLbsSatelliteElevation,
- c3gWanLbsSatelliteAzimuth,
- c3gWanLbsSatelliteUsed,
- c3gWanLbsSatelliteInfoSignalNoiseRatio,
- c3gWanLbsSatelliteInfoRowStatus

c3gWanSms

The following is a list of the MIB objects under c3gWanSms:

- c3gSmsServiceAvailable,
- c3gSmsOutSmsCount,
- c3gSmsOutSmsErrorCount,
- c3gSmsInSmsStorageUsed,
- c3gSmsInSmsStorageUnused,
- c3gSmsInSmsArchiveCount,
- c3gSmsInSmsArchiveErrorCount,
- c3gSmsInSmsArchived,
- c3gSmsArchiveUrl,
- c3gSmsOutSmsStatus,
- c3gSmsInSmsCount,
- c3gSmsInSmsDeleted,
- c3gSmsInSmsStorageMax,
- c3gSmsInSmsCallBack,
- c3gSmsOutSmsPendingCount,
- c3gSmsOutSmsArchiveCount,
- c3gSmsOutSmsArchiveErrorCount

ciscoWan3gMIBNotifs

Cisco 3G WAN MIBs implementation supports SNMP GET (read operation) for all MIB objects, and SNMP SET (write operation) for the following RW (read-write) objects and more:

- c3gRssiOnsetNotifEnabled
- c3gRssiOnsetNotifThreshold
- c3gRssiAbateNotifEnabled
- c3gRssiAbateNotifThreshold
- c3gEcIoOnsetNotifEnabled
- c3gEcIoOnsetNotifThreshold
- c3gEcIoAbateNotifEnabled
- c3gEcIoAbateNotifThreshold
- c3gModemTemperOnsetNotifEnabled
- c3gModemTemperOnsetNotifThreshold
- c3gModemTemperAbateNotifEnabled
- c3gModemTemperAbateNotifThreshold
- c3gModemReset
- c3gModemUpNotifEnabled
- c3gModemDownNotifEnabled

- c3gServiceChangedNotifEnabled
- c3gNetworkChangedNotifEnabled
- c3gConnectionStatusChangedNotifFlag
- c3gRssiOnsetNotifFlag
- c3gRssiAbateNotifFlag
- c3gEcIoOnsetNotifFlag
- c3gEcIoAbateNotifFlag
- c3gModemTemperOnsetNotifEnabled
- c3gModemTemperAbateNotifEnabled

Note By default, all notifications are disabled. To view notifications, you must enable these notifications.

Note The IF MIBs also have notifications for the cellular interface objects that are used in conjunction with the notification type. When you get a notification, you must check the associated objects.

Table 8 shows various 3G WAN MIB traps and what they mean.

Table 8 3G WAN MIB Traps

3G WAN MIB Traps	Details
c3gModemUpNotif	Modem has successfully been recognized.
c3gModemDownNotif	Crash or power-cycle.
c3gServiceChangedNotif	Service type has changed.
c3gConnectionStatusChangedNotif	Connection status has changed.

Restrictions

- For the router that runs the SNMP agent, you must configure appropriate access control (for example, SNMP-server community) using the Cisco IOS CLI for the NMS and agent to work properly.
- It is strongly recommended that you configure SNMP V3 with authentication/privacy when implementing SNMP SET operation.

Configuring 3G

Note The procedure to configure 3G on both modular and fixed Cisco ISRs is the same except for slot numbering.
For example, for 3G HWICs, the numbering for slot 0, wic 0, and port 0 would be 0/0/0 for all commands. For a fixed Cisco ISR, it would be only 0.
Please refer to platform-specific documentation for details on slot numbering.

To configure the 3G features, follow these procedures:

- Data Account Provisioning, page 48
- Data Call Setup, page 51
- (Optional) Voice Initiated Data Callback or Remote Dial-In, page 61

Data Account Provisioning

Note To provision your modem, you must have an active wireless account with a service provider and a SIM card installed in your 3G EHWIC.

To provision your data account, follow these procedures:

- Verifying Signal Strength and Service Availability, page 48
- Configuring a Modem Data Profile, page 50

Verifying Signal Strength and Service Availability

To verify the signal strength and service availability on your modem, use the following commands in the privileged EXEC mode.

SUMMARY STEPS

1. **show cellular** *unit* **network**
2. **show cellular** *unit* **radio**
3. **show cellular** *unit* **profile**
4. **show cellular** *unit* **security**
5. **show cellular** *unit* **all**

DETAILED STEPS

	Command or Action	Purpose
Step 1	**show cellular** *unit* **network** **Example:** `Router# show cellular 0/0/0 network`	Displays information about the carrier network, cell site, and available service.
Step 2	**show cellular** *unit* **radio** **Example:** `Router# show cellular 0/0/0 radio`	Shows the radio signal strength. **Note** The RSSI should be better than -90 dBm for steady and reliable connection.
Step 3	**show cellular** *unit* **profile** **Example:** `Router# show cellular 0/0/0 profile`	Shows information about the modem data profiles created.
Step 4	**show cellular** *unit* **security** **Example:** `Router# show cellular 0/0/0 security`	Shows the security information for the modem, such as SIM and modem lock status.
Step 5	**show cellular** *unit* **all** **Example:** `Router# show cellular 0/0/0 all`	Shows consolidated information, including the modem, profiles created, radio signal strength,and network security.

Configuring a Modem Data Profile

To configure or create a new modem data profile, enter the following command in the privileged EXEC mode.

SUMMARY STEPS

1. **cellular** *unit* **gsm profile create** *profile_number apn authentication username password protocol*

DETAILED STEPS

Command or Action	Purpose
cellular *unit* **gsm profile** *create profile_number apn authentication username password protocol* **Example:** `Router# cellular 0/0/0 gsm profile create 3 apn.com chap gsm gsmPassword ipv4`	Creates a new modem data profile. For details on the command parameters, see Table 9 .

Table 9 Modem Data Profile Parameters

Parameter	Description
unit	(EHWIC) The router slot, WIC slot, and port separated by slashes. For example, 0/1/0. (Fixed platform) The number 0.
profile_number	Number for the profile you are creating. You can create up to 16 profiles.
apn	Access Point Name. You must get this information from the service provider.
authentication	The type of authentication. For example, CHAP or PAP.
username	The username provided by your service provider.
password	The password provided by your service provider.
protocol	Network protocol: IPv4 or PPP.

Data Call Setup

To set up a data call, use the following procedures:

- Configuring the Cellular Interface (HSPA-U), page 52
- Configuring the Cellular Interface (HSPA+7), page 54
- Configuring DDR, page 55
- Configuring DDR Backup, page 57

Figure 22 shows a typical data call setup for EHWIC-3G-HSPA-U.

Figure 22 Data Call Setup with EHWIC-3G-HSPA-U

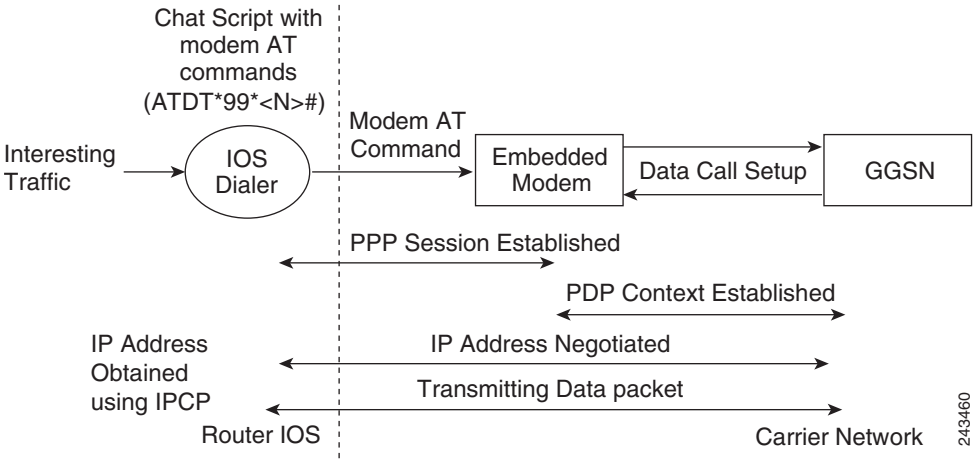

Figure 23 shows a typical data call setup for EHWIC-3G-HSPA+7.

Figure 23 Data Call Setup with EHWIC-3G-HSPA+7

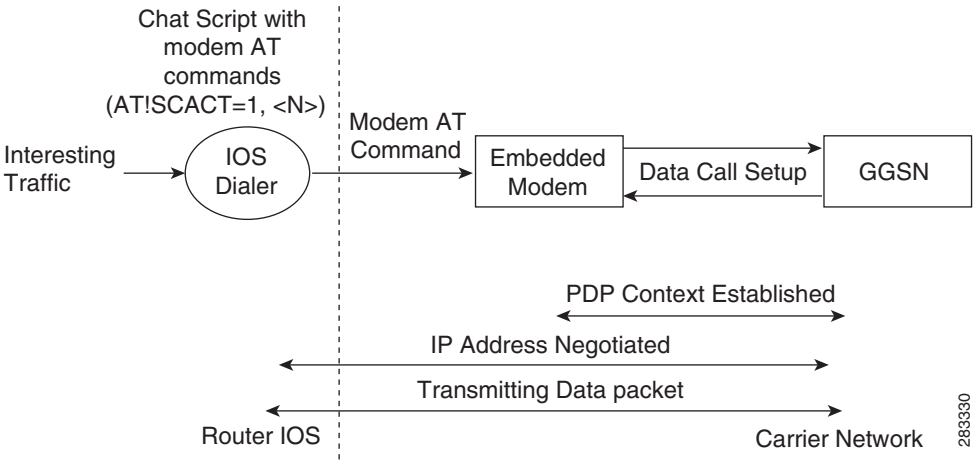

Configuring the Cellular Interface (HSPA-U)

To configure the cellular interface, enter the following commands in the cellular interface mode.

SUMMARY STEPS

1. **configure terminal**
2. **interface cellular unit**
3. **encapsulation ppp**
4. **ppp chap hostname** *host*
5. **ppp chap password 0** *password*
6. **asynchronous mode interactive**
7. **ip address negotiated**

Note The PPP CHAP authentication parameters that you use in this procedure must be the same as the username and password provided by your carrier and configured under the GSM profile.

DETAILED STEPS

	Command or Action	Purpose
Step 1	**configure terminal** **Example:** `Router# configure terminal`	Enters global configuration mode from the terminal.
Step 2	**interface cellular** *unit* **Example:** `Router(config)# interface cellular 0/0/0`	Specifies the cellular interface. **Note** Interface cellular 0/0/0 is for PDP 1. Interface cellular 0/0/1 is for PDP 2. Multiple PDP contexts are applicable only to HSPA HWICs.
Step 3	**encapsulation ppp** **Example:** `Router(config-if)# encapsulation ppp`	Specifies PPP encapsulation for an interface configured for dedicated asynchronous mode or dial-on-demand routing.
Step 4	**ppp chap hostname** *hostname* **Example:** `Router(config-if)# ppp chap hostname cisco@wwan.ccs`	Defines an interface-specific CHAP hostname. This must match the username given by the carrier.
Step 5	**ppp chap password** *password* **Example:** `Router(config-if)# ppp chap password 0 cisco`	Defines an interface-specific CHAP password. This must match the password given by the carrier.

	Command or Action	Purpose
Step 6	**`async mode interactive`** **Example:** `Router(config-if)# async mode interactive`	Returns a line that has been placed into dedicated asynchronous network mode to interactive mode, thereby enabling the **SLIP** and **PPP** commands in the privileged EXEC mode.
Step 7	**`ip address negotiated`** **Example:** `router(config-if)# ip address negotiated`	Specifies that the IP address for a particular interface is obtained via PPP/IPCP address negotiation.

Note When a static IP address is required for the cellular interface, the address may be configured as **ip address negotiated**. During IPCP, the network ensures that the correct static IP address is allocated to the device. If a tunnel interface is configured with **ip address unnumbered** *cellular interface*, it is necessary to configure the actual static IP address under the cellular interface, in place of **ip address negotiated**. For a sample cellular interface configuration, see the "Basic Cellular Interface Configuration (HSPA-U)" section on page 63.

Configuring the Cellular Interface (HSPA+7)

To configure the cellular interface, enter the following commands in the cellular interface mode.

SUMMARY STEPS

1. **configure terminal**
2. **interface cellular** *unit*
3. **encapsulation slip**
4. **asynchronous mode interactive**
5. **ip address negotiated**

DETAILED STEPS

	Command or Action	Purpose
Step 1	**`configure terminal`** **Example:** `Router# configure terminal`	Enters global configuration mode from the terminal.
Step 2	**`interface cellular`** *unit* **Example:** `Router(config)# interface cellular 0/0/0`	Specifies the cellular interface. **Note** Interface cellular 0/0/0 is for PDP 1. Interface cellular 0/0/1 is for PDP 2. Multiple PDP contexts are applicable only to HSPA HWICs.
Step 3	**`encapsulation slip`** **Example:** `Router(config-if)# encapsulation slip`	Specifies slip encapsulation for an interface configured for dedicated asynchronous mode or dial-on-demand routing.
Step 4	**`async mode interactive`** **Example:** `Router(config-if)# async mode interactive`	Returns a line that has been placed into dedicated asynchronous network mode to interactive mode, thereby enabling the **SLIP** and **PPP** commands in the privileged EXEC mode.
Step 5	**`ip address negotiated`** **Example:** `Router(config-if)# ip address negotiated`	Specifies that the IP address for a particular interface is obtained via PPP/IPCP address negotiation.

Note When a static IP address is required for the cellular interface, the address may be configured as **ip address negotiated**. During IPCP, the network ensures that the correct static IP address is allocated to the device. If a tunnel interface is configured with **ip address unnumbered** *cellular interface*, it is necessary to configure the actual static IP address under the cellular interface, in place of **ip address negotiated**. For a sample cellular interface configuration, see the "Basic Cellular Interface Configuration (HSPA-U)" section on page 63.

Configuring DDR

To configure dial-on-demand routing (DDR) for the cellular interface, perform the following steps.

SUMMARY STEPS

1. **configure terminal**
2. **interface cellular** *unit*
3. **dialer in-band**
4. **dialer idle-timeout** *seconds*
5. **dialer string** *string*
6. **dialer group** *number*
7. **exit**
8. **dialer-list** *dialer-group* **protocol** *protocol-name* {**permit** | **deny** | **list** *access-list-number* | **access-group**}
9. **ip access-list** *access list number* **permit** *ip source address*
10. **line** *unit*
11. **script dialer** *regexp*
12. **exit**
13. **chat-script** *script name* **"" "ATDT*98***profile number***#" TIMEOUT** *timeout value* **CONNECT**

    or

    chat-script *script name* **"" "AT!SCACT=1,***profile number***" TIMEOUT** *timeout value* **OK**
14. **interface cellular** *unit*
15. **dialer string** *string*

DETAILED STEPS

	Command or Action	Purpose
Step 1	**`configure terminal`** **Example:** `Router# configure terminal`	Enters global configuration mode from the terminal.
Step 2	**`interface cellular`** *`unit`* **Example:** `Router(config)# interface cellular 0/0/0`	Specifies the cellular interface.
Step 3	**`dialer in-band`** **Example:** `Router(config-if)# dialer in-band`	Enables DDR and configures the specified serial interface to use in-band dialing.

	Command or Action	Purpose
Step 4	**dialer idle-timeout** *seconds* **Example:** `Router(config-if)# dialer idle-timeout 30`	Specifies the duration of idle time, in seconds, after which a line will be disconnected.
Step 5	**dialer string** *string* **Example:** `Router(config-if)# dialer string gsm`	Specifies the number or string to dial. Use the name of the CHAT script here.
Step 6	**dialer-group** *number* **Example:** `Router(config-if)# dialer-group 1`	Specifies the number of the dialer access group to which the specific interface belongs.
Step 7	**exit** **Example:** `Router(config-if)# exit`	Enters the global configuration mode.
Step 8	**dialer-list** *dialer-group* **protocol** *protocol-name* {**permit** | **deny** | **list** *access-list-number* | **access-group**} **Example:** `Router(config)# dialer-list 1 protocol ip list 1`	Creates a dialer list for traffic of interest and permits access to an entire protocol.
Step 9	**ip access-list** *access list number* **permit** *ip source address* **Example:** `Router(config)# ip access-list 1 permit any`	Defines traffic of interest.
Step 10	**line** *unit* **Example:** `Router(config-line)# line 0/0/0`	Specifies the line configuration mode.
Step 11	**script dialer** *regexp* **Example:** `Router(config-line)# script-dialer gsm`	Specifies a default modem chat script.
Step 12	**exit** **Example:** `Router(config-line)# exit`	Exits line configuration mode.

	Command or Action	Purpose

Step 13	**chat-script** *script name* **"" "ATDT*98*** *profile number* **#" TIMEOUT** *timeout value* **CONNECT**
	
	or
	
	chat-script *script name* **"" "AT!SCACT=1,***profile number***" TIMEOUT** *timeout value* **OK**
	
	Example:
	`Router(config)# chat-script gsm "" "ATDT*98*2#" TIMEOUT 60 "CONNECT"`
	
	or
	
	Example:
	`Router(config)# chat-script hspa+ "" "AT!SCACT=1,1" TIMEOUT 60 "OK"`
		Defines the ATDT commands when the dialer is initiated.
		
		or
		
		Defines the AT commands to initiate the dialer and set up data-call.

Step 14	**interface cellular** *unit* **Example:** `Router(config)# interface cellular 0/1/0`	Specifies the cellular interface.
Step 15	**dialer string** *string* **Example:** `Router(config)# dialer string gsm`	Specifies the dialer script that was defined using the **chat script** command)

Configuring DDR Backup

To monitor the primary connection and initiate the backup connection when needed, the router can use one of the following methods:

- Backup Interface—The backup interface that stays in standby mode until the primary interface line protocol is detected as down and then is brought up.
- Floating Static Route—The route through the backup interface has an administrative distance that is greater than the administrative distance of the primary connection route and therefore would not be in the routing table until the primary interface goes down.
- Dialer Watch—The backup feature that integrates dial backup with routing capabilities.

To configure DDR backup, perform the following procedures:

- Configuring Interfaces to Use a Backup Interface, page 58
- Configuring DDR Backup Using Dialer Watch, page 59
- Configuring DDR Backup Using Floating Static Route, page 61

Configuring Interfaces to Use a Backup Interface

To configure one or more interfaces to use a backup interface, perform the following steps.

SUMMARY STEPS

1. **interface** *type number*
2. **backup interface cellular** *number*
3. **backup delay** *enable-delay disable-delay*

DETAILED STEPS

	Command or Action	Purpose
Step 1	**interface** *type number* **Example:** `Router(config)# interface ATM0/0/0`	Specifies the interface to be backed up and begins interface configuration mode.
Step 2	**backup interface cellular** *number* **Example:** `Router(config-if)# backup interface cellular0/3/0`	Specifies the cellular interface as backup.
Step 3	**backup delay** *enable-delay disable-delay* **Example:** `Router(config-if)# backup delay enable delay`	Specifies delay between the physical interface going down and the backup interface being enabled, and between the physical interface coming back up and the backup being disabled.

Note You cannot configure a backup interface for the cellular interface and any other asynchronous serial interface.

Configuring DDR Backup Using Dialer Watch

To initiate dialer watch, you must configure the interface to perform DDR and backup. Use traditional DDR configuration commands, such as dialer maps, for DDR capabilities. To enable dialer watch on the backup interface and create a dialer list, perform the following steps.

SUMMARY STEPS

1. **configure terminal**
2. **interface** *type number*
3. **dialer watch group** *group-number*
4. **dialer watch-list** *group-number* **ip** *ip-address address-mask*
5. **dialer-list** *dialer-group* **protocol** *protocol name* {**permit** | **deny** | **list** *access list number* | **access-group**}
6. **ip access-list** *access list number* **permit** *ip source address*
7. **interface cellular** *unit*
8. **dialer string** *string*

DETAILED STEPS

	Command or Action	Purpose
Step 1	**configure terminal** **Example:** `Router# configure terminal`	Enters global configuration mode from the terminal.
Step 2	**interface** *type number* **Example:** `Router(config)# interface ATM0/0/0`	Specifies the interface.
Step 3	**dialer watch-group** *group-number* **Example:** `Router(config-if)# dialer watch-group 2`	Enables dialer watch on the backup interface.
Step 4	**dialer watch-list** *group-number* **ip** *ip-address address-mask* **Example:** `Router(config-if)# dialer watch-list 2 ip 10.4.0.254 255.255.0.0`	Defines a list of all IP addresses to be watched.
Step 5	**dialer-list** *dialer-group* **protocol** *protocol-name* {**permit** | **deny** | **list** *access-list-number* | **access-group**}> **Example:** `Router(config)# dialer-list 2 protocol ip permit`	Creates dialer list for traffic of interest and permits access to an entire protocol.

	Command or Action	Purpose
Step 6	**ip access-list** *access list number* **permit** *ip source address* **Example:** `Router(config)# ip access-list 2 permit 10.4.0.0`	Defines traffic of interest. **Note** Do not use the **access list permit all** command to avoid sending traffic to the IP network. This may result in call termination.
Step 7	**interface cellular** *unit* **Example:** `Router(config)# interface cellular 0/1/0`	Specifies the cellular interface.
Step 8	**dialer string** *string* **Example:** `Router(config)# dialer string gsm`	Specifies the dialer script that was defined using the **chat script** command.

Configuring DDR Backup Using Floating Static Route

To configure a floating static default route on the secondary interface, perform the following steps.

Note Make sure you have ip classless enabled on your router.

SUMMARY STEPS

1. **configure terminal**
2. **ip route** *network-number network-mask* {**ip address** | **interface**} [**administrative distance**] [**name** *name*]

DETAILED STEPS

	Command or Action	Purpose
Step 1	**configure terminal** **Example:** `Router# configure terminal`	Enters global configuration mode from the terminal.
Step 2	**ip route** *network-network-mask* {**ip-address** | **interface**} [**administrative distance**] [**name** *name*] **Example:** `Router(config)# ip route 0.0.0.0 Dialer 2 track 234`	Establishes a floating static route with the configured administrative distance through the specified interface. **Note** A higher administrative distance should be configured for the route through the backup interface so that it is used only when the primary interface is down.

(Optional) Voice Initiated Data Callback or Remote Dial-In

The dial-in feature uses the cellular voice connection request to initiate data call back from an EHWIC.

Note For HWICs that support multiple PDP contexts, callback will be initiated only for the first PDP context, for example, for the interface Cellular 0/x/0.

To configure voice-initiated data callback or remote dial-in on your modem, use the following commands in the privileged EXEC mode.

SUMMARY STEPS

1. **dialer caller callback**
2. **show caller**
3. **debug cellular messages callback**

DETAILED STEPS

	Command or Action	Purpose
Step 1	**dialer caller** *number* **callback** **Example:** `Router# dialer caller 23456789 callback`	Configures caller ID screening for a dialer rotary group interface or to bind an incoming call to a particular dialer profile. Use the **no dialer caller callback** command to disable callback. **Note** In general, the use of this command performs call screening in non-exact mode. It means that the leading numbers comparison is ignored when one of the configured caller ID or incoming call caller ID number is shorter. The comparison is done only for digits of the shorter number. When you configure the **dialer caller callback** command on the cellular interface, the exact mode is enforced if no wildcard characters like *x* are specified in the dialer string. In the exact mode, if the numbers do not match in length or in digits, the callback will fail.
Step 2	**show caller** **Example:** `Router# show caller`	Shows caller ID screening.
Step 3	**debug cellular** *unit* **messages callback** **Example:** `Router# debug cellular 0 messages callback`	Enables the driver level debug for callback screening.

Note You can use the **dialer caller callback** command multiple times to configure multiple call back numbers.

Configuration Examples

This section provides the following configuration examples:

- Basic Cellular Interface Configuration (HSPA-U), page 63
- Basic Cellular Interface Configuration (HSPA+7), page 63
- Tunnel over Cellular Interface Configuration, page 64
- 3G Wireless Modem as Backup with NAT and IPSec, page 64
- Voice-Initiated Data Callback, page 67

Basic Cellular Interface Configuration (HSPA-U)

The following example shows how to configure the HSPA-U-based cellular interface to be used as a primary interface and as the default route:

```
chat-script gsm "" "ATDT*98*2#" TIMEOUT 60 "CONNECT‟

!
interface Cellular 0/0/0
 ip address negotiated
 encapsulation ppp
 dialer in-band
 dialer string gsm
 dialer-group 1
 async mode interactive
 ppp chap hostname cisco@wwan.ccs
 ppp chap password 0 cisco
 ppp ipcp dns request
!

!
!
access-list 1 permit any
dialer-list 1 protocol ip list 1
!
line 0/0/0
 exec-timeout 0 0
 script dialer gsm
 login
 modem InOut
```

Basic Cellular Interface Configuration (HSPA+7)

The following example shows how to configure the HSPA+7-based cellular interface to be used as a primary interface and as the default route:

```
chat-script hspa+ "" "AT!SCACT=1,1" TIMEOUT 60 "OK"

interface Cellular0
 ip address negotiated
 encapsulation slip
 dialer in-band
 dialer string hspa+
 dialer-group 1
 async mode interactive
```

```
ip route 0.0.0.0 0.0.0.0 Cellular0

dialer-list 1 protocol ip permit

line 0/0/0    ! for the fixed platforms (88x or 81x) use "line 3" instead of the line
0/0/0
 exec-timeout 0 0
 script dialer direct-ip
 modem InOut
```

Tunnel over Cellular Interface Configuration

The following example shows how to configure the static IP address when a tunnel interface is configured with the **ip address unnumbered** *cellular interface* command:

```
interface Tunnel2
 ip unnumbered Cellular0/3/0
 tunnel source Cellular0/3/0
 tunnel destination 128.107.248.254

interface Cellular0/3/0
 bandwidth receive 1400000
 ip address 23.23.0.1 255.255.0.0
 ip nat outside
 ip virtual-reassembly
 encapsulation ppp
 no ip mroute-cache
 dialer in-band
 dialer idle-timeout 0
 dialer string dial<carrier>
 dialer-group 1
 async mode interactive
 no ppp lcp fast-start
 ppp chap hostname <hostname>
 ppp chap password 0 <password>
 ppp ipcp dns request

! traffic of interest through the tunnel/cellular interface
ip route 10.10.0.0 255.255.0.0 Tunnel2
```

3G Wireless Modem as Backup with NAT and IPSec

The following example shows how to configure the 3G wireless modem on the router as backup with NAT and IPSec.

Note The receive and transmit speeds cannot be configured. The actual throughput depends on the cellular network service.

```
ip dhcp excluded-address 10.4.0.254
!
ip dhcp pool gsm pool
   network 10.4.0.0 255.255.0.0
   dns-server 66.209.10.201 66.102.163.231
   default-router 10.4.0.254
!
!
chat-script gsm "" "atdt*98*1#" TIMEOUT 30 "CONNECT"
```

```
crypto isakmp policy 1
 encr 3des
 authentication pre-share
crypto isakmp key gsm address 128.107.241.234
!
!
crypto ipsec transform-set gsm ah-sha-hmac esp-3des
!
crypto map gsm1 10 ipsec-isakmp
 set peer 128.107.241.234
 set transform-set gsm
 match address 103
!
!
interface ATM0/0/0
 no ip address
 ip virtual-reassembly
 load-interval 30
 no atm ilmi-keepalive
 dsl operating-mode auto
!
interface ATM0/0/0.1 point-to-point
 backup interface Cellular0/3/0
 ip nat outside
 ip virtual-reassembly
 no snmp trap link-status
 pvc 0/35
  pppoe-client dial-pool-number 2
 !
!
interface Cellular0/3/0
 bandwidth receive 1400000
 ip address negotiated
 ip nat outside
 ip virtual-reassembly
 encapsulation ppp
 no ip mroute-cache
 dialer in-band
 dialer idle-timeout 0
 dialer string gsm
 dialer-group 1
 async mode interactive
 no ppp lcp fast-start
 ppp chap hostname cisco@wwan.ccs
 ppp chap password 0 cisco
 ppp ipcp dns request
 crypto map gsm1
!

interface Vlan104
 description used as default gateway address for DHCP clients
 ip address 10.4.0.254 255.255.0.0
 ip nat inside
 ip virtual-reassembly
!
interface Dialer2
 ip address negotiated
 ip mtu 1492
 ip nat outside
 ip virtual-reassembly
 encapsulation ppp
 load-interval 30
 dialer pool 2
```

```
 dialer-group 2
 ppp authentication chap callin
 ppp chap hostname cisco@dsl.com
 ppp chap password 0 cisco
 ppp ipcp dns request
 crypto map gsm1
!
ip local policy route-map track-primary-if
ip route 0.0.0.0 0.0.0.0 Dialer2 track 234
ip route 0.0.0.0 0.0.0.0 Cellular0/3/0 254
!
!
ip nat inside source route-map nat2cell interface Cellular0/3/0 overload
ip nat inside source route-map nat2dsl interface Dialer2 overload
!
ip sla 1
 icmp-echo 209.131.36.158 source-interface Dialer2
 timeout 1000
 frequency 2
ip sla schedule 1 life forever start-time now
access-list 1 permit any
access-list 2 permit 10.4.0.0 0.0.255.255
access-list 3 permit any
access-list 101 permit ip 10.4.0.0 0.0.255.255 any
access-list 102 permit icmp any host 209.131.36.158
access-list 103 permit ip host 166.138.186.119 128.107.0.0 0.0.255.255
access-list 103 permit ip host 75.40.113.246 128.107.0.0 0.0.255.255
dialer-list 1 protocol ip list 1
dialer-list 2 protocol ip permit
!
!
route-map track-primary-if permit 10
 match ip address 102
 set interface Dialer2
!
route-map nat2dsl permit 10
 match ip address 101
 match interface Dialer2
!
route-map nat2cell permit 10
 match ip address 101
 match interface Cellular0/3/0
!

line 0/3/0
 exec-timeout 0 0
 script dialer dial gsm
 login
 modem InOut
```

Voice-Initiated Data Callback

The following example shows how to configure voice-initiated data callback on the router:

```
hostname 1900
!
boot-start-marker
boot-end-marker
!
security passwords min-length 1
enable password lab
!
no aaa new-model
service-module wlan-ap 0 bootimage autonomous
!
no ipv6 cef
ip source-route
ip cef

!
!
multilink bundle-name authenticated
!
chat-script gsm "" "atdt*98*2#" TIMEOUT 180 "CONNECT"
!
!
license udi pid CISCO1941-W sn FHH1249P021
!
!
archive
 log config
  hidekeys
!
!
controller Cellular 0/0
!
!
!
interface Loopback1
 ip address 1.1.1.1 255.255.255.255
!
interface Wlan-GigabitEthernet0/0
 description Internal switch interface connecting to the embedded AP
!
interface GigabitEthernet0/0
 no ip address
 shutdown
 duplex auto
 speed auto
!
interface wlan-ap0
 description Service module interface to manage the embedded AP
 no ip address
 shutdown
 arp timeout 0
 no mop enabled
 no mop sysid
!
interface GigabitEthernet0/1
 no ip address
 shutdown
 duplex auto
```

```
 speed auto
!
interface Cellular0/0/0
 ip address negotiated
 encapsulation ppp
 no ip mroute-cache
 load-interval 30
 dialer in-band
 dialer pool-member 1
 dialer-group 1
 no peer default ip address
 fair-queue 64 16 0
 no ppp lcp fast-start
 routing dynamic
!
interface Vlan1
 no ip address
!
interface Dialer1
 ip address negotiated
 encapsulation ppp
 dialer pool 1
 dialer idle-timeout 0
 dialer string gsm
 dialer caller 9994082188382 callback
 dialer-group 1
!
ip forward-protocol nd
ip route 0.0.0.0 0.0.0.0 Dialer1
!
no ip http server
no ip http secure-server
!
!
dialer-list 1 protocol ip permit
!
!
snmp-server group steeler3g v3 auth match exact notify 3gView
snmp-server community public RW
snmp-server community steeler3g-test RW
snmp-server enable traps c3g
snmp-server host 172.27.168.158 public  c3g
snmp-server host 172.27.168.158 public udp-port 6059
!
control-plane
!
!
line con 0
 exec-timeout 0 0
line aux 0
line 0/0/0
 script dialer gsm
 login
 modem InOut
 no exec
 transport input all
 transport output all
 rxspeed 3100000
 txspeed 1800000
line 67
 no activation-character
 no exec
 transport preferred none
 transport input all
```

```
 transport output pad telnet rlogin lapb-ta mop udptn v120 ssh
line vty 0 3
 password lab
 login
!
exception data-corruption buffer truncate
scheduler allocate 20000 1000
end

1900#
```

Upgrading the Modem Firmware

The fixed and modular ISRs have a 3G modem from Sierra Wireless. The firmware for the modem is upgradable using Cisco IOS commands. The firmware is packaged in a tar distribution file and can be downloaded from the wireless software download page on Cisco.com. Use the following procedure to upgrade the modem firmware:

Caution Before upgrading the modem to a new firmware version, please check if the new firmware version has been certified by your wireless service provider. Using an uncertified firmware version on the modem may impact the wireless service provider network adversely.

Note You can also remotely download firmware over the air by following the same steps listed below.

Refer to the following website for the latest certified firmware version for your carrier and IOS compatibility:

http://www.cisco.com/en/US/prod/routers/networking_solutions_products_genericcontent0900aecd80601f7e.html

Step 1 Go to the Cisco Wireless WAN software download website at

http://www.cisco.com/cisco/software/navigator.html?mdfid=278875243&i=rp.

Note This website is available to registered Cisco.com users only.

Step 2 From the Wireless Integrated Switches and Routers category, select the appropriate 3G modem firmware package.

Step 3 Download the firmware package to a TFTP/FTP server that is accessible to the router.

Note For a remote download, transfer the firmware package from Cisco.com onto flash using the 3G wireless link. Configure the external dialer to bring the interface and the dialer up again after the download.

Step 4 Use the following **archive** command to untar the firmware package onto the router flash:

archive tar /xtract *source-url destination-url*

Step 5 Use the following command to initiate the firmware upgrade process:

microcode reload cellular *pa-bay slot* **gsm modem-provision**

Caution Do not disconnect the power or switch the router off during the firmware upgrade process as this may result in permanent modem failure.

Command Reference

This section documents the commands that you can use with Cisco EHWIC and 880G for 3.7G (HSPA+)/3.5G (HSPA).

Note The procedure for configuring 3G on both modular and fixed Cisco ISRs is the same except for slot numbering. For example, for 3G EHWICs, the numbering for slot 0, wic 0, and port 0 is 0/0/0 for all commands. For a fixed Cisco ISR, it is 0. See platform-specific documentation for details on slot numbering.

- cellular gsm band
- cellular gsm mep unlock
- cellular gsm plmn search
- cellular gsm plmn select
- cellular gsm profile create
- cellular gsm sim activate slot
- cellular gsm sim change-pin
- cellular gsm sim lock
- cellular gsm sim unblock
- cellular gsm sim unlock
- cellular gsm sms delete
- cellular gsm sms send
- cellular gsm sms view
- debug cell-hwic driver
- debug cell-hwic firmware
- debug cell-hwic virt-con
- debug cellular messages all
- debug cellular messages async
- debug cellular messages callcontrol
- debug cellular messages data
- debug cellular messages gps
- debug cellular messages nmea
- debug cellular messages sms
- gsm event connection-status mib-trap
- gsm event ecio abate
- gsm event ecio onset
- gsm event modem-state mib-trap
- gsm event network mib-trap
- gsm event rssi abate

- gsm event rssi onset
- gsm event service mib-trap
- gsm event temperature abate
- gsm event temperature onset
- gsm failovertimer
- gsm gps mode
- gsm gps nmea
- gsm radio off
- gsm sim authenticate
- gsm sim max-retry
- gsm sim primary slot
- gsm sim profile
- gsm sms archive path
- show cellular all
- show cellular connection
- show cellular gps
- show cellular hardware
- show cellular network
- show cellular profile
- show cellular radio
- show cellular security
- show cellular sms
- show controllers cellular
- show interfaces cellular
- show run interface cellular

cellular gsm band

To select a particular band manually, use the **cellular gsm band** command in privileged EXEC mode.

cellular *unit* **gsm band** *band*

Syntax Description

unit	(EHWIC) Router slot, WIC slot, and port separated by slashes (for example, 0/1/0). (Fixed platform) The number 0.
band	GSM/WCDMA frequency bands. **Note** Only the bands that can be selected by the modem are listed.

Command Modes

Privileged EXEC (#)

Command History

Release	Modification
12.4(15)T1	This command was introduced.

cellular gsm mep unlock

To submit the unlocking code to the service provider when the modem is locked by Mobile Equipment Personalization (MEP), use the **cellular gsm mep unlock** command in privileged EXEC mode.

cellular *unit* **gsm mep unlock** *mep-unlock-code*

Syntax Description

unit	(EHWIC) Router slot, WIC slot, and port separated by slashes (for example, 0/1/0). (Fixed platform) The number 0.
mep-unlock-code	A 1 to 12 digit code provided by the original carrier to unlock a modem that has been factory restricted to that specific carrier.

Command Modes

Privileged EXEC (#)

Command History

Release	Modification
15.0(1)XA	This command was introduced.

Usage Guidelines

- Check the modem status using the **show cellular security** command.
- Entering the command will result in automatic modem reset if you have entered the correct MEP code. If the code is incorrect, the modem pauses and resends the notification to enter MEP code.

Note For modular routers, you must enter the slot/subslot/port numbers for the command. For fixed routers, you must enter slot/port numbers.

Examples

To verify if the modem MEP is locked, use the **show cellular security** command. The following output is an example when the modem MEP is locked:

```
router# show cellular 0 security
Card Holder Verification (CHV1) = Disabled
SIM Status = MEP locked
SIM User Operation Required = Enter MEP code
Number of Retries remaining = 255
router#
```

The following example shows the output for this command when you enter a correct MEP PIN:

```
router# cellular 0 gsm mep unlock 12348765
!!!WARNING: Modem will be MEP unlocked with PIN:12348765(8).
Interface will be shutdown for MEP unlock.
This will terminate any active data connection.Are you sure you want to proceed?[confirm]
MEP unlock code has been sent to modem for verfication
Resetting modem, please wait...

*Sep 26 01:36:04.103: %CISCO800-2-MODEM_REMOVAL_DETECTED: Cellular0 modem is now REMOVED
*Sep 26 01:36:04.103: %CISCO800-2-MODEM_DOWN: Cellular0 modem is now DOWN.
*Sep 26 01:36:05.391: %LINK-5-CHANGED: Interface Cellular0, changed state to
administratively down
*Sep 26 01:36:10.443: Sierra Wireless 501modem is detected
*Sep 26 01:36:10.443: %CISCO800-2-MODEM_INSERTED_DETECTED: Cellular0 modem is now INSERTED
*Sep 26 01:36:17.551: %LINK-3-UPDOWN: Interface Cellular0, changed state to down
*Sep 26 01:36:45.867: %CISCO800-2-MODEM_UP: Cellular0 modem is now UP.
router#
router#
router#sh cellular 0 security
Card Holder Verification (CHV1) = Disabled
SIM Status = OK
SIM User Operation Required = None
Number of Retries remaining = 3
router#
```

Related Commands

Command	Description
show cellular security	Displays the SIM status and the modem lock state.

cellular gsm plmn search

To search for available public land mobile networks (PLMNs), use the **cellular gsm plmn search** command in privileged EXEC mode.

cellular *unit* **gsm plmn search**

Syntax Description

unit	(EHWIC) Router slot, WIC slot, and port separated by slashes (for example, 0/1/0). (Fixed platform) The number 0.

Command Modes

Privileged EXEC (#)

Command History

Release	Modification
12.4(11)XV	This command was introduced.
12.4(15)T	This command was integrated into Cisco IOS Release 12.4(15)T.

Usage Guidelines

This command searches for available PLMNs or carrier networks at your location. After you issue this command, you must wait for the search completion message and then use the **show cellular network** command to view the list of the PLMNs available. It may take up to 5 minutes for the search to be completed.

Examples

The following example shows the output for this command:

```
router# cellular 0/1/0 gsm plmn search
router#
Dec 12 07:37:15.147: Searching for available PLMNS...Please wait...
Dec 12 07:37:45.095: PLMN search done. Please use "show cellular
x/x/x network" to see available PLMNS
c2800#sh cellular 0/1/0 network
<…deleted…>
Available PLMN's:
PLMN Name = <carrier name>
        MCC = 310, MNC = 380
        Status = Registered,, Network = Unknown
PLMN Name = <carrier name>
        MCC = 310, MNC = 380
        Status = Registered,Supports GPRS, Network = gsm
PLMN Name = <carrier name>
        MCC = 310, MNC = 17
        Status = Supports GPRS, Network = gsm
```

Related Commands

Command	Description
show cellular network	Displays the SIM status and the modem lock state.

cellular gsm plmn select

To manually or automatically select from the available public land mobile network (PLMN) in an area to attach the modem to, use the **cellular gsm plmn select** command in privileged EXEC mode.

cellular *unit* **gsm plmn select** {**manual** *mcc mnc* | **auto**}

Syntax Description

unit	(EHWIC) Router slot, WIC slot, and port separated by slashes (for example, 0/1/0). (Fixed platform) The number 0.
manual	Allows manual selection of the PLMN for the modem.
mcc	Mobile country code—Number between 0 and 65535.
mnc	Mobile network code—Number between 0 and 65535.
auto	Automatically selects the PLMN available in the area.

Command Default

By default, PLMN is set to automatic.

Command Modes

Privileged EXEC (#)

Command History

Release	Modification
12.4(11)XV	This command was introduced.
12.4(15)T	This command was integrated into Cisco IOS Release 12.4(15)T.

Examples

The following example shows the output for the **cellular gsm plmn select manual** command. In this example, the user selects PLMN with MCC=310, MNC=17. The **show cellular** *x/x/x* **network** command shows the modem attached to the EDGE network.

```
Dec 12 07:38:43.799: Selecting PLMN mode to Manual...Please wait...
Dec 12 07:38:43.811: PLMN Selection Successful

router# show cellular 0/1/0 network
Current Service Status = Normal, Service Error = None
Current Service = Combined
Packet Service = EDGE (Attached)
Packet Session Status = Inactive
Current Roaming Status = Roaming
Network Selection Mode = Manual
Country = USA, Network = Cinglr
Mobile Country Code (MCC) = 310
Mobile Network Code (MNC) = 17
Location Area Code (LAC) = 230
Routing Area Code (RAC) = 1
Cell ID = 25573
```

```
Primary Scrambling Code = 0
PLMN Selection = Manual
Registered PLMN = Cingular , Abbreviated = Cinglr
Service Provider = ROGERS
```

The following example shows the output for the **cellular gsm plmn select auto** command:

```
router# cellular 0/1/0 gsm plmn select auto
router#
Dec 12 07:46:42.751: Selecting PLMN mode to Auto...Please wait...
Dec 12 07:46:42.763: PLMN Selection Successful
router#
router#sh cellular 0/1/0 network
Current Service Status = Normal, Service Error = None
Current Service = Combined
Packet Service = UMTS/WCDMA (Attached)
Packet Session Status = Inactive
Current Roaming Status = Roaming
Network Selection Mode = Automatic
Country = USA, Network = CINGULAR
Mobile Country Code (MCC) = 310
Mobile Network Code (MNC) = 380
Location Area Code (LAC) = 56997
Routing Area Code (RAC) = 253
Cell ID = 4503
Primary Scrambling Code = 169
PLMN Selection = Automatic
Registered PLMN = CINGULAR , Abbreviated = CINGULAR
Service Provider = ROGERS
```

Related Commands

Command	Description
show cellular network	Displays information about the carrier network and service.

cellular gsm profile create

To create a new modem data profile, use the **cellular gsm profile create** command in privileged EXEC mode.

cellular *unit* **gsm profile create**
profile_number apn authentication username password protocol

Syntax Description

unit	(EHWIC) Router slot, WIC slot, and port separated by slashes (for example, 0/1/0). (Fixed platform) The number 0.
profile_number	Number for the profile to be created. Up to 16 profiles can be created.
apn	Access Point Name. This information is from the service provider.
authentication	Type of authentication. For example, CHAP or PAP.
username	Username provided by the service provider.
password	Password provided by the service provider.
protocol	Network protocol: IPv4 or PPP.

Command Modes

Privileged EXEC (#)

Command History

Release	Modification
12.4(11)XV	This command was introduced.
12.4(15)T	This command was integrated into Cisco IOS Release 12.4(15)T.
15.1(4)M	This command was modified.
15.1(4)M4	This command was modified to increase the lengths of the username and password from 32 to 128 B.

Usage Guidelines

Some of the command parameters, such as username, password, and authentication, are optional and do not need specification. When multiple profiles are created, you can select the profile used to set up the data call by including the profile number in the **ATDT** command (**ATDT*99***profile number***#**). If you do not include a profile number in the **ATDT** command (**ATDT*99#**), profile 1 is used.

This command prompts you before overwriting a defined profile.

Examples

The following example shows the output for this command:

```
router# cellular 0/0/0 gsm profile create 3 apn.com chap gsm gsmPassword

Profile 3 will be created with the following values:
APN = apn.com
Authentication = CHAP
Username = gsm
Password = gsmPassword
Are you sure? [confirm]y
```

```
Profile 3 written to modem

R8795# cellular 0 gsm profile create 1
Profile 1 already exists. Do you want to overwrite? [confirm]
Profile 1 will be overwritten with the following values:
PDP type = IPv4
APN =
Are you sure? [confirm]
Profile 1 written to modem

R8795# cellular 0 gsm profile create 1
Profile 1 already exists. Do you want to overwrite? [confirm]n
Profile 1 is not changed.
```

Related Commands

Command	Description
ATDT	Enables the modem to dial the number of a remote device.

cellular gsm sim activate slot

To activate the SIM card, use the **cellular gsm sim activate slot** command in privileged EXEC mode.

cellular *unit* **gsm sim activate slot** *slot_sum*

Syntax Description

unit	(EHWIC) Router slot, WIC slot, and port separated by slashes (for example, 0/1/0). (Fixed platform) The number 0.
slot_sum	SIM slot number.

Command Modes

Privileged EXEC (#)

Command History

Release	Modification
15.0(1)XA	This command was introduced.

cellular gsm sim change-pin

To change the CHV1 PIN for the SIM, use the **cellular gsm sim change-pin** command in privileged EXEC mode.

cellular *unit* **gsm sim change-pin** *old pin new pin*

Syntax Description

unit	(EHWIC) Router slot, WIC slot, and port separated by slashes (for example, 0/1/0). (Fixed platform) The number 0.
puk	Unblocking CHV1 code to be obtained from the carrier.
pin	A 4 to 8 character code provided by the carrier to lock or unlock the SIM card.

Command Modes

Privileged EXEC (#)

Command History

Release	Modification
15.0(1)XA	This command was introduced.

Usage Guidelines

You can attempt to change the PIN only three times consecutively after which the SIM will get blocked. The **cellular gsm sim change-pin** command resets the modem.

cellular gsm sim lock

To lock or unlock the SIM card provided by the service provider, use the **cellular gsm sim lock** command in privileged EXEC mode.

cellular *unit* **gsm sim lock** pin

Syntax Description

unit	(EHWIC) Router slot, WIC slot, and port separated by slashes (for example, 0/1/0). (Fixed platform) The number 0.
pin	Numeric code provided by the carrier to lock or unlock the SIM card. **Note** The code is only numeric.

Command Modes

Privileged EXEC (#)

Command History

Release	Modification
12.4(15)T	This command was introduced.
15.0(1)XA	This command was modified.

Usage Guidelines

To verify the SIM lock, use the **show cellular** *unit* **security** command.
To change the PIN, use the **cellular gsm sim change-pin** command.

Examples

The following example shows the output for this command:

```
router# show cellular 0 security
Card Holder Verification (CHV1) = Disabled
SIM Status = OK
SIM User Operation Required = None
Number of Retries remaining = 3
router#

router#cellular 0 gsm sim lock 1234
!!!WARNING: SIM will be locked with pin=1234(4).
Do not enter new PIN to lock SIM. Enter PIN that the SIM is configured with.
Call will be disconnected!!!
Are you sure you want to proceed?[confirm]
router#
router#
router#
*Sep 28 17:33:04.052: %CISCO800-2-MODEM_REMOVAL_DETECTED: Cellular0 modem is now REMOVED
*Sep 28 17:33:04.056: %CISCO800-2-MODEM_DOWN: Cellular0 modem is now DOWN.
*Sep 28 17:33:10.724: Sierra Wireless 501modem is detected
*Sep 28 17:33:10.724: %CISCO800-2-MODEM_INSERTED_DETECTED: Cellular0 modem is now INSERTED
router#
router#
```

```
*Sep 28 17:33:46.032: %CELLWAN-2-SIM_LOCKED: [Cellular0]: SIM is locked
*Sep 28 17:33:46.140: %CISCO800-2-MODEM_UP: Cellular0 modem is now UP.
router#
router#sh cellular 0 security
Card Holder Verification (CHV1) = Enabled <<<=== lock sim is enabled
SIM Status = Locked  <<<=== no authentication, user can not use SIM
SIM User Operation Required = Enter CHV1 <<<=== enter "gsm sim authentication <0|7> <PIN>
Number of Retries remaining = 3
router#
```

If the modem is not ready, you will see the following output:

```
router# cellular 0 gsm sim unlock 1234
Cellular0 Modem is still in reset, we recommend to re-execute this cmd after 60 seconds
router#
```

```
router(config)#controller cellular 0
router(config-controller)#gsm sim authenticate ?
  0  Specifies an UNENCRYPTED (cleartext) PIN will follow
  7  Specifies a HIDDEN PIN will follow

router(config-controller)#gsm sim authenticate 0 1234
CHV1 configured and sent to modem for verification
router(config-controller)#
router(config-controller)#end
router#
*Sep 28 17:38:02.516: %SYS-5-CONFIG_I: Configured from console by console
router#
router#sh cellular 0 security
Card Holder Verification (CHV1) = Enabled <<<=== SIM locked is enabled
SIM Status = OK <<<=== authentication is correct, user may use SIM
SIM User Operation Required = None
Number of Retries remaining = 3
router#
```

The following example shows the output for **show cellular** *unit* **security**:

```
router# show cellular 0/1/0 security
Card Holder Verification (CHV1) = Enabled
SIM Status = Locked
SIM User Operation Required = Enter CHV1
Number of Retries remaining = 3
```

The following example shows how to remove authentication with the SIM still in locked state:

```
router(config)# controller cellular 0
router(config-controller)#no gsm sim authenticate 0 1234
WARNING!!!This command will not unlock SIM. Please execute 'cellular <unit> gsm sim unlock
<pin>' to unlock SIM.
Resetting modem. Call will be disconnected.
router(config-controller)#
router(config-controller)#
*Sep 28 17:40:07.808: %CISCO800-2-MODEM_REMOVAL_DETECTED: Cellular0 modem is now REMOVED
*Sep 28 17:40:07.808: %CISCO800-2-MODEM_DOWN: Cellular0 modem is now DOWN
router(config-controller)#
router(config-controller)#end
router#
*Sep 28 17:40:11.256: %SYS-5-CONFIG_I: Configured from console by console
*Sep 28 17:40:14.700: Sierra Wireless 501modem is detected
*Sep 28 17:40:14.700: %CISCO800-2-MODEM_INSERTED_DETECTED: Cellular0 modem is now INSERTED
router#
```

```
router#
*Sep 28 17:40:50.040: %CELLWAN-2-SIM_LOCKED: [Cellular0]: SIM is locked
*Sep 28 17:40:50.148: %CISCO800-2-MODEM_UP: Cellular0 modem is now UP
router#
```

Note You will see high CPU when modem is not up and ready.

The following example shows the output when the wrong authentication is entered:

```
router(config)#controller cellular 0
router(config-controller)#gsm sim authenticate 0 45689
CHV1 configured and sent to modem for verification
router(config-controller)#end
router#
*Sep 28 17:42:14.700: %CELLWAN-2-SIM_LOCKED: [Cellular0]: SIM is locked
*Sep 28 17:42:14.700: %CELLWAN-2-SIM_CHV1_CONFIG_REMOVED: [Cellular0]: CHV1 verification
failed: Incorrect PIN configured. Erased the CHV1 code from router running configuration
to avoid SIM blocking during modem reset/powercycle.
!!!WARNING: If the incorrect PIN is saved in router start-up configuration, please remove
it manually to avoid SIM blocking during router reload
*Sep 28 17:42:15.468: %SYS-5-CONFIG_I: Configured from console by console
router#
```

The following example shows the output when booting up a router with a locked SIM without authentication configured in Cisco IOS:

```
router#
*Sep 28 21:47:08.411: %CELLWAN-2-SIM_LOCKED: [Cellular0]: SIM is locked
*Sep 28 21:47:08.531: %CISCO800-2-MODEM_UP: Cellular0 modem is now UP.
*Sep 28 21:47:16.675: %CELLWAN-2-SIM_LOCKED: [Cellular0]: SIM is locked
router#
router#sh cellular 0 security
Card Holder Verification (CHV1) = Enabled
SIM Status = Locked
SIM User Operation Required = Enter CHV1
Number of Retries remaining = 3  <<<=== no lost to retries
router#
```

The following example shows the output when booting up a router with an unlocked SIM with authentication configured in Cisco IOS:

```
router#
*Sep 28 21:14:42.575: %CISCO800-2-MODEM_UP: Cellular0 modem is now UP.
*Sep 28 21:14:45.575: %CELLWAN-2-SIM_SECURITY_SHUTDOWN: [Cellular0/0]: CHV1 PIN is
configured while SIM is unlocked. Shutting down all PDP interfaces
*Sep 28 21:14:47.771: %CELLWAN-2-SIM_SECURITY_SHUTDOWN: [Cellular0/0]: CHV1 PIN is
configured while SIM is unlocked. Shutting down all PDP interfaces
*Sep 28 21:14:50.611: %CELLWAN-2-SIM_SECURITY_SHUTDOWN: [Cellular0/0]: CHV1 PIN is
configured while SIM is unlocked. Shutting down all PDP interfaces
router#
router#sh run
Building configuration...

Current configuration : 2057 bytes
!
!
```

```
controller Cellular 0
 gsm sim authenticate 0 1234  <<<=== config remains with show run
!
!
interface Cellular0
 ip address negotiated
 encapsulation ppp
 shutdown <<<=== PDP context should be shut down
!
router#

router#sh cellular 0 security
Card Holder Verification (CHV1) = Disabled
SIM Status = OK
SIM User Operation Required = None
Number of Retries remaining = 3  <<<=== no lost of retries
router#
```

The following example shows the output when locking an already locked SIM:

```
router# cellular 0 gsm sim lock 1234
!!!WARNING: SIM will be locked with pin=1234(4).
Do not enter new PIN to lock SIM. Enter PIN that the SIM is configured with.
Call will be disconnected!!!
Are you sure you want to proceed?[confirm]
Lock CHV1 failed: SIM status = Locked
router#
```

The following example shows the output when changing the SIM PIN when the SIM is not locked:

```
router#sh cellular 0 security
Card Holder Verification (CHV1) = Disabled
SIM Status = OK
SIM User Operation Required = None
Number of Retries remaining = 3
router#
router#
router#cellular 0 gsm sim change-pin ?
  WORD  Old PIN (Length 4 to 8 digits)

router# cellular 0 gsm sim change-pin 1234 5678 ?
  <cr>

router#cellular 0 gsm sim change-pin 1234 5678
!!!WARNING: SIM PIN will be changed from:1234(4) to:5678(4)
Call will be disconnected. If old PIN is entered incorrectly in 3 attempt(s), SIM will be
blocked!!!
Are you sure you want to proceed?[confirm]
Change CHV1 failed: CHV1 verification not enabled <<<=== SIM needs to be locked first
router#
```

The following example shows the output when the SIM's PIN is changed while in authentication state in Cisco IOS:

```
Card Holder Verification (CHV1) = Enabled
SIM Status = OK
SIM User Operation Required = None
Number of Retries remaining = 3
router#
router#cellular 0 gsm sim change-pin 1234 5678
!!!WARNING: SIM PIN will be changed from:1234(4) to:5678(4)
Call will be disconnected. If old PIN is entered incorrectly in 3 attempt(s), SIM will be
blocked!!!
Are you sure you want to proceed?[confirm]
Change CHV1 failed: Please remove 'gsm sim authenticate' from controller configuration and
then retry this command
router#
```

Note You must remove authentication from IOS first before you can change the PIN.

```
router(config)#controller cellular 0
router(config-controller)#no gsm sim authenticate 0 1234  <<<=== this needs to be done
first before can change PIN
WARNING!!!This command will not unlock SIM. Please execute 'cellular <unit> gsm sim unlock
<pin>' to unlock SIM.
Resetting modem. Call will be disconnected.
router(config-controller)#
*Sep 28 18:00:44.999: %CISCO800-2-MODEM_REMOVAL_DETECTED: Cellular0 modem is now REMOVED
*Sep 28 18:00:44.999: %CISCO800-2-CELLULAR_INTERFACE_NOT_SHUTDOWN: WARNING: Cellular0
interface should be shutdown before removing modem. Reload Required to reset interface
*Sep 28 18:00:44.999: %CISCO800-2-MODEM_DOWN: Cellular0 modem is now DOWN.
router(config-controller)#end
router#
*Sep 28 18:00:48.167: %SYS-5-CONFIG_I: Configured from console by console
*Sep 28 18:00:51.191: Sierra Wireless 501modem is detected
*Sep 28 18:00:51.191: %CISCO800-2-MODEM_INSERTED_DETECTED: Cellular0 modem is now INSERTED
router#
router#
*Sep 28 18:01:26.535: %CELLWAN-2-SIM_LOCKED: [Cellular0]: SIM is locked
*Sep 28 18:01:26.655: %CISCO800-2-MODEM_UP: Cellular0 modem is now UP.
router#

router#cellular 0 gsm sim change-pin 1234 5678
!!!WARNING: SIM PIN will be changed from:1234(4) to:5678(4)
Call will be disconnected. If old PIN is entered incorrectly in 3 attempt(s), SIM will be
blocked!!!
Are you sure you want to proceed?[confirm]
Resetting modem, please wait...

CHV1 code change has been completed. Please enter the new PIN in controller configuration
for verification
router#
router#
*Sep 28 18:02:32.051: %CISCO800-2-MODEM_REMOVAL_DETECTED: Cellular0 modem is now REMOVED
*Sep 28 18:02:32.051: %CISCO800-2-CELLULAR_INTERFACE_NOT_SHUTDOWN: WARNING: Cellular0
interface should be shutdown before removing modem. Reload Required to reset interface
*Sep 28 18:02:38.159: Sierra Wireless 501modem is detected
*Sep 28 18:02:38.159: %CISCO800-2-MODEM_INSERTED_DETECTED: Cellular0 modem is now INSERTED
*Sep 28 18:02:51.655: %CISCO800-2-MODEM_DOWN: Cellular0 modem is now DOWN.
```

Related Commands

Command	Description
show cellular security	Displays the SIM status and modem lock state.

cellular gsm sim unblock

To unblock the SIM card provided by the service provider when the CHV1 has been blocked, use the **cellular gsm sim unblock** command in privileged EXEC mode.

cellular *unit* **gsm sim unblock** *puk new pin*

Syntax Description

unit	(EHWIC) Router slot, WIC slot, and port separated by slashes (for example, 0/1/0). (Fixed platform) The number 0.
puk	Unblocking 8-digit CHV1 code to be obtained from the carrier.
pin	A 4 to 8 character code provided by the carrier to lock or unlock the SIM card.

Command Modes

Privileged EXEC (#)

Command History

Release	Modification
15.0(1)XA	This command was introduced.

Usage Guidelines

You can verify the unlocked mode by using the **show cellular** *unit* **security** command.

Note The device will become permanently blocked and the SIM completely unusable if the unlocking code is not entered correctly after, usually, 10 attempts. The permitted number of attempts can vary depending on the SIM.

Examples

The following example shows the output for this command:

```
router# cellular 0/1/0 gsm sim unblock 60265772 1234
!!!WARNING: SIM will be unblocked with PUK=60265772(8).
If successful, SIM will be locked with new PIN:1234(4)!!!
Are you sure you want to proceed?[confirm]
Resetting modem, please wait...

CHV1 unblock has been completed. Please enter the new PIN in controller configuration for
verfication
router#
router#
router#
*Sep 28 18:11:37.263: %CISCO800-2-MODEM_REMOVAL_DETECTED: Cellular0 modem is now REMOVED
*Sep 28 18:11:37.263: %CISCO800-2-CELLULAR_INTERFACE_NOT_SHUTDOWN: WARNING: Cellular0
interface should be shutdown before removing modem. Reload Required to reset interface
*Sep 28 18:11:37.263: %CISCO800-2-MODEM_DOWN: Cellular0 modem is now DOWN.
*Sep 28 18:11:44.183: Sierra Wireless 501modem is detected
*Sep 28 18:11:44.183: %CISCO800-2-MODEM_INSERTED_DETECTED: Cellular0 modem is now INSERTED
*Sep 28 18:12:19.467: %CELLWAN-2-SIM_LOCKED: [Cellular0]: SIM is locked
*Sep 28 18:12:19.575: %CISCO800-2-MODEM_UP: Cellular0 modem is now UP.
```

```
router#
router#
router#sh cellular 0 security
Card Holder Verification (CHV1) = Enabled
SIM Status = Locked
SIM User Operation Required = Enter CHV1
Number of Retries remaining = 3
router#
```

Related Commands

Command	Description
show cellular security	Displays the SIM status and modem lock state.

cellular gsm sim unlock

To unlock the SIM card provided by the service provider, use the **cellular gsm sim unlock** command in privileged EXEC mode.

cellular *unit* **gsm sim unlock** *pin*

Syntax Description

unit	(EHWIC) Router slot, WIC slot, and port separated by slashes (for example, 0/1/0). (Fixed platform) The number 0.
pin	A 4 to 8 character code provided by the carrier to lock or unlock the SIM card.

Command Modes

Privileged EXEC (#)

Command History

Release	Modification
12.4(15)T1	This command was introduced.

Usage Guidelines

You can verify the unlocked mode by using the **show cellular** *unit* **security** command.

Examples

The following example shows the output for this command:

```
router# cellular 0/1/0 gsm sim unlock 1234
!!!WARNING: SIM will be unlocked with pin=1234(4), call will be disconnected!!!
Are you sure you want to proceed?[confirm]
```

Related Commands

Command	Description
show cellular security	Displays the SIM status and modem lock state.

cellular gsm sms delete

To delete an SMS message on the GSM band, use the **cellular gsm sms delete** command in privileged EXEC mode.

cellular *unit* **gsm sms delete {all |** *message-id***}**

Syntax Description

unit	(EHWIC) Router slot, WIC slot, and port separated by slashes (for example, 0/1/0). (Fixed platform) The number 0.
all	Delete all messages.
message-id	ID (0–255) of the message to be deleted.

Command Modes

Privileged EXEC (#)

Command History

Release	Modification
15.1(3)T	This command was introduced.

Examples

The following example deletes all SMS messages:

```
router# cellular 0/1/0 gsm sms delete all
```

Related Commands

Command	Description
cellular gsm sms send	Sends outgoing SMS messages on the GSM band.
cellular gsm sms view	Displays all incoming messages stored on the SIM card.
debug cellular messages sms	Displays SMS background activities for debugging purposes.
gsm sms archive path	Configures the FTP settings of the directory used to archive SMS.
show cellular sms	Displays SMS statistics.

cellular gsm sms send

To send an outgoing SMS message on the GSM band, use the **cellular gsm sms send** command in privileged EXEC mode.

cellular *unit* **gsm sms send** *destination-number sms-content*

Syntax Description

unit	(EHWIC) Router slot, WIC slot, and port separated by slashes (for example, 0/1/0). (Fixed platform) The number 0.
destination-number	Telephone number of SMS message recipient.
sms-content	SMS message text that is sent to recipient. The message can be no more than 160 characters long.

Command Modes

Privileged EXEC (#)

Command History

Release	Modification
15.1(3)T	This command was introduced.

Examples

The following example shows how to send an SMS message:

```
router# cellular 0/1/0 gsm sms send 1234567 "Test message"
```

Related Commands

Command	Description
cellular gsm sms delete	Deletes SMS messages on the gsm band.
cellular gsm sms view	Displays all incoming messages stored on the SIM card.
debug cellular messages sms	Displays SMS background activities for debugging purposes.
gsm sms archive path	Configures the FTP settings of the directory used to archive SMS.
show cellular sms	Displays SMS statistics.

cellular gsm sms view

To display all incoming messages on the GSM band stored on the SIM card, use the **cellular gsm sms view** command in privileged EXEC mode.

cellular *unit* **gsm sms view** {**summary** | **all** | *message-id*}

Syntax Description

unit	(EHWIC) Router slot, WIC slot, and port separated by slashes (for example, 0/1/0). (Fixed platform) The number 0.
summary	Displays the first few characters of a message.
all	Displays the entire payload of all messages.
message-id	Displays the entire payload of the specified message. The ID is a number between 0 and 255.

Command Modes

Privileged EXEC (#)

Command History

Release	Modification
15.1(3)T	This command was introduced.

Examples

The following example shows the output for this command:

```
router# cellular 0/1/0 gsm sms view summary
ID   FROM                 YY/MM/DD HR:MN:SC  SIZE  CONTENT
0    4087993680           10/05/04 21:29:55  32    from John ...
1    4087993680           10/05/04 21:52:45  32    from Jane ...
2    4087993680           10/05/04 21:56:56  32    from Jake ...
3    4087993680           10/05/04 21:56:58  32    from Tom ...
4    4087993680           10/05/04 21:57:00  32    from Sam ...
```

Related Commands

Command	Description
cellular gsm sms delete	Deletes SMS messages on the GSM band.
cellular gsm sms send	Sends outgoing SMS messages on the GSM band.
debug cellular messages sms	Displays SMS background activities for debugging purposes.
gsm sms archive path	Configures the FTP settings of the directory used to archive SMS.
show cellular sms	Displays SMS statistics.

debug cell-hwic driver

To debug the Cisco IOS driver for the cellular interface, use the **debug cell-hwic driver** command in privileged EXEC mode.

debug cell-hwic *unit* **driver** {**crcdump** | **errdump** | **errors**}

Syntax Description

unit	(EHWIC) Router slot, WIC slot, and port separated by slashes (for example, 0/1/0). (Fixed platform) The number 0.
crcdump	CRC error details.
errdump	Other error details.
errors	Errors debugging.

Command Modes

Privileged EXEC (#)

Command History

Release	Modification
12.4(11)XV	This command was introduced.
12.4(15)T	This command was integrated into Cisco IOS Release 12.4(15)T.
12.2SX	This command is supported in the Cisco IOS Release 12.2SX train. Support in a specific 12.2SX release of this train depends on your feature set, platform, and platform hardware.

Usage Guidelines

Use this command for debugging purposes only.

Related Commands

Command	Description
debug cellular messages async	Debugs cellular async.
debug cellular messages data	Prints Cisco IOS data path debug messages.
debug cellular firmware	Displays Cisco IOS firmware information.
debug cellular messages management	Prints management path messages, such as CnS.
debug cellular messages dm	Prints diagnostics monitor (DM) messages from the Qualcomm chipset.
debug cell-hwic virt-con	Redirects the Nios II console driver messages to display them in the Cisco IOS router console environment.

debug cell-hwic firmware

To see the Cisco IOS firmware information, use the **debug cell-hwic firmware** command in privileged EXEC mode.

debug cell-hwic *unit* **firmware**

Syntax Description

unit	(EHWIC) Router slot, WIC slot, and port separated by slashes (for example, 0/1/0). (Fixed platform) The number 0.

Command Modes

Privileged EXEC (#)

Command History

Release	Modification
12.4(11)XV	This command was introduced.
12.4(15)T	This command was integrated into Cisco IOS Release 12.4(15)T.
12.4(22)YB1	This command was integrated into Cisco IOS Release 12.4(22)YB1.

Usage Guidelines

Use this command for debugging purposes only.

Related Commands

Command	Description
debug cellular messages async	Debugs cellular async.
debug cellular messages data	Prints Cisco IOS data path debug messages.
debug cell-hwic driver	Debugs the Cisco IOS driver.
debug cell-hwic virt-con	Redirects the Nios II console driver messages to display them in the Cisco IOS router console environment.

debug cell-hwic virt-con

To redirect the Nios II console driver messages to display them in the Cisco IOS router console environment, use the **debug cell-hwic virt-con** command in privileged EXEC mode.

debug cell-hwic *unit* **virt-con** {**clear** | **disable** | **dump-data-structs** | **log** | **monitor** | **wrapper-on** | **wrapper-off**}

Syntax Description

unit	(EHWIC) Router slot, WIC slot, and port separated by slashes (for example, 0/1/0). (Fixed platform) The number 0.
clear	(Optional) Clears all virtual console debug log messages.
disable	(Optional) Disables virtual console real-time debug monitoring.
dump-data-structs	(Optional) Dumps virtual console data structures.
log	(Optional) Displays virtual console messages from the debug log.
monitor	(Optional) Enables monitoring of real-time virtual console debug messages.
wrapper-on	(Optional) Disables wraparound for virtual console log messages.
wrapper-off	(Optional) Enables wraparound for virtual console log messages.

Command Default

There is no default for this command.

Command Modes

Privileged EXEC (#)

Command History

Release	Modification
12.4(11)XV	This command was introduced.
12.4(15)T	This command was integrated into Cisco IOS Release 12.4(15)T.
12.2SX	This command is supported in the Cisco IOS Release 12.2SX train. Support in a specific 12.2SX release of this train depends on your feature set, platform, and platform hardware.
12.4(22)YB1	This command was integrated into Cisco IOS Release 12.4(22)YB1.

Usage Guidelines

Use this command for debugging purposes only.

Related Commands

Command	Description
debug cellular messages all	Prints all Cisco IOS driver debug messages.
debug cellular messages async	Debugs cellular async.
debug cellular messages data	Prints Cisco IOS data path debug messages.

Command	Description
debug cellular messages dm	Prints diagnostics monitor (DM) messages from the Qualcomm chipset.
debug cellular messages management	Prints management path messages, such as CnS.
debug cell-hwic driver	Debugs the Cisco IOS driver.
debug cell-hwic firmware	Displays Cisco IOS firmware information.

debug cellular messages all

To print all Cisco IOS driver debug messages, use the **debug cellular messages all** command in privileged EXEC mode.

debug cellular *unit* **messages all**

Syntax Description

unit	(EHWIC) Router slot, WIC slot, and port separated by slashes (for example, 0/1/0). (Fixed platform) The number 0.

Command Modes

Privileged EXEC (#)

Command History

Release	Modification
12.4(11)XV	This command was introduced.
12.4(15)T	This command was integrated into Cisco IOS Release 12.4(15)T.

Usage Guidelines

Use this command for debugging purposes only.

Related Commands

Command	Description
debug cellular messages async	Debugs cellular async.
debug cellular messages data	Prints Cisco IOS data path debug messages.
debug cell-hwic virt-con	Redirects the Nios II console driver messages to display them in the Cisco IOS router console environment.

debug cellular messages async

To debug cellular async, use the **debug cellular messages async** command in privileged EXEC mode.

debug cellular *unit* **messages async**

Syntax Description

unit	(EHWIC) Router slot, WIC slot, and port separated by slashes (for example, 0/1/0). (Fixed platform) The number 0.

Command Modes

Privileged EXEC (#)

Command History

Release	Modification
12.4(11)XV	This command was introduced.
12.4(15)T	This command was integrated into Cisco IOS Release 12.4(15)T.

Usage Guidelines

Use this command for debugging purposes only.

Related Commands

Command	Description
debug cellular messages all	Prints all Cisco IOS driver debug messages.
debug cellular messages data	Prints Cisco IOS data path debug messages.
debug cell-hwic virt-con	Redirects the Nios II console driver messages to display them in the Cisco IOS router console environment.

debug cellular messages callcontrol

To debug cellular direct IP call control, use the **debug cellular messages callcontrol** command in privileged EXEC mode.

debug cellular *unit* **messages callcontrol**

Syntax Description

unit	(EHWIC) Router slot, WIC slot, and port separated by slashes (for example, 0/1/0). (Fixed platform) The number 0.

Command Modes

Privileged EXEC (#)

Command History

Release	Modification
12.4(11)XV	This command was introduced.
12.4(15)T	This command was integrated into Cisco IOS Release 12.4(15)T.

Usage Guidelines

Use this command for debugging purposes only.

Related Commands

Command	Description
debug cellular messages all	Prints all Cisco IOS driver debug messages.
debug cellular messages data	Prints Cisco IOS data path debug messages.
debug cell-hwic virt-con	Redirects the Nios II console driver messages to display them in the Cisco IOS router console environment.

debug cellular messages data

To print Cisco IOS data path debug messages, use the **debug cellular messages data** command in privileged EXEC mode.

debug cellular *unit* **messages data**

Syntax Description

unit	(EHWIC) Router slot, WIC slot, and port separated by slashes (for example, 0/1/0). (Fixed platform) The number 0.

Command Modes

Privileged EXEC (#)

Command History

Release	Modification
12.4(11)XV	This command was introduced.
12.4(15)T	This command was integrated into Cisco IOS Release 12.4(15)T.

Usage Guidelines

Use this command for debugging purposes only.

Related Commands

Command	Description
debug cellular messages all	Prints all Cisco IOS driver debug messages.
debug cellular messages async	Debugs cellular async.
debug cell-hwic virt-con	Redirects the Nios II console driver messages to display them in the Cisco IOS router console environment.

debug cellular messages gps

To display the GPS background activities for debugging purposes, use the **debug cellular messages gps** command in privileged EXEC mode.

debug cellular *unit* **messages gps**

Syntax Description

unit	(EHWIC) Router slot, WIC slot, and port separated by slashes (for example, 0/1/0). (Fixed platform) The number 0.

Command Modes

Privileged EXEC (#)

Command History

Release	Modification
15.1(3)T	This command was introduced.

Examples

The following example shows the output for this command:

```
router# debug cellular 0/1/0 messages gps
GPS debugging is on
```

Related Commands

Command	Description
gsm gps mode	Enables the GPS mode.
show cellular gps	Displays GPS statistics.

debug cellular messages nmea

To display NMEA background activities for debugging purposes, use the **debug cellular messages nmea** command in privileged EXEC mode.

debug cellular *unit* **messages nmea**

Syntax Description

unit	(EHWIC) Router slot, WIC slot, and port separated by slashes (for example, 0/1/0). (Fixed platform) The number 0.

Command Modes

Privileged EXEC (#)

Command History

Release	Modification
15.1(3)T	This command was introduced.

Examples

The following example shows the output for this command:

```
router# debug cellular 0/1/0 messages nmea
```

Related Commands

Command	Description
gsm gps nmea	Enables or disables GPS NMEA stream state.

debug cellular messages sms

To display SMS background activities (for example, SMS downloading, deleting, and sending activities) for debugging purposes, use the **debug cellular messages sms** command in privileged EXEC mode.

debug cellular *unit* **messages sms**

Syntax Description

unit	(EHWIC) Router slot, WIC slot, and port separated by slashes (for example, 0/1/0). (Fixed platform) The number 0.

Command Modes

Privileged EXEC (#)

Command History

Release	Modification
15.1(3)T	This command was introduced.

Examples

The following example shows the output for this command:

```
router# debug cellular 0/1/0 messages sms
```

Related Commands

Command	Description
cellular gsm sms delete	Deletes SMS messages on the GSM band.
cellular gsm sms send	Sends outgoing SMS messages on the GSM band.
cellular gsm sms view	Displays all incoming messages stored on the SIM card.
gsm sms archive path	Configures the FTP settings of the directory used to archive SMS.
show cellular sms	Displays SMS statistics.

gsm event connection-status mib-trap

To check the connection status of a 3G WAN MIB trap event, use the **gsm event connection-status mib-trap** command in controller configuration mode.

gsm event connection-status mib-trap {All-gsm | connected | connecting | disconnected | dormant | error | idle | unknown}

Syntax Description

All-gsm	All GSM connection states.
connected	Connected state.
connecting	Connecting state.
disconnected	Disconnected state.
dormant	Dormant state.
error	Errored state.
idle	Idle state.
unknown	Unknown state.

Command Default

None

Command Modes

Controller configuration (config-controller)

Command History

Release	Modification
15.1(3)T	This command was introduced.

Examples

The following example shows how to use this command:

```
router(config-controller)# gsm event connection-status mib-trap idle
```

Related Commands

Command	Description
gsm event modem-state mib-trap	Sets the modem state for sending 3G WAN MIB trap events.
gsm event network mib-trap	Sends 3G WAN MIB trap events when network changes occur.
gsm event service mib-trap	Sends 3G WAN MIB trap events when service changes occur.

gsm event ecio abate

To set the ECIO abate threshold value for sending 3G WAN MIB trap events, use the **gsm event ecio abate** command in controller configuration mode.

gsm event ecio abate {mib-trap *mibtrap* **| threshold** *threshold-value***}**

Syntax Description

mib-trap *mibtrap*	Specifies the mib-trap technology: • **All-gsm**—All the GSM/UMTS Services. • **edge**—EDGE Service. • **gprs**—GPRS Service. • **hsdpa**—HSDPA Service. • **hspa**—HSPA Service. • **hspa-plus**—HSPA Plus Service. • **hsupa**—HSUPA Service. • **umts/wcdma**—UMTS/WDMA Service.
threshold *threshold-value*	Sets the threshold for sending MIB trap events to the specified value. When the ECIO abate value is greater than the specified threshold, a MIB trap event is sent to the administrator. The range of the threshold value is from -150 to 0 dBm.

Command Modes

Controller configuration (config-controller)

Command History

Release	Modification
15.1(3)T	This command was introduced.

Examples

The following example configures the router to send MIB trap events on all supported GSM networks when the ECIO value is above the abate threshold of -50 dBm:

```
router(config-controller)# gsm event ecio abate mib-trap All-gsm
router(config-controller)# gsm event ecio abate threshold -50
```

The following example configures the router to send MIB trap events on the EDGE network when the ECIO value is above the abate threshold of -100 dBm:

```
router(config-controller)# gsm event ecio abate mib-trap edge
router(config-controller)# gsm event ecio abate threshold -100
```

Related Commands

Command	Description
gsm event ecio onset	Sets the ECIO onset threshold value for sending 3G WAN MIB trap events.

gsm event ecio onset

To set the ECIO onset threshold value for sending 3G WAN MIB trap events, use the **gsm event ecio onset** command in controller configuration mode.

gsm event ecio onset {mib-trap *mibtrap* **| threshold** *threshold-value***}**

Syntax Description

mib-trap *mibtrap*	Specifies the mib-trap network on which to send the MIB trap: • **All-gsm**—All the GSM/UMTS Services. • **edge**—EDGE Service. • **gprs**—GPRS Service. • **hsdpa**—HSDPA Service. • **hspa**—HSPA Service. • **hspa-plus**—HSPA Plus Service. • **hsupa**—HSUPA Service. • **umts/wcdma**—UMTS/WDMA Service.
threshold *threshold-value*	Sets the threshold for sending MIB trap events to the specified value. When the ECIO value is less than the specified onset threshold, a MIB trap event is sent to the administrator. The range of the threshold value is from -150 to 0 dBm.

Command Modes

Controller configuration (config-controller)

Command History

Release	Modification
15.1(3)T	This command was introduced.

Examples

The following example configures the router to send MIB trap events on all supported GSM networks when the ECIO value is below the onset threshold of -50 dBm:

```
router(config-controller)# gsm event ecio onset mib-trap All-gsm
router(config-controller)# gsm event ecio onset threshold -50
```

The following example configures the router to send MIB trap events on the EDGE network when the ECIO value is below the onset threshold of -100 dBm:

```
router(config-controller)# gsm event ecio onset mib-trap edge
router(config-controller)# gsm event ecio onset threshold -100
```

Related Commands

Command	Description
gsm event ecio abate	Sets the ECIO abate threshold value for sending 3G WAN MIB trap events.

gsm event modem-state mib-trap

To set the modem state for sending 3G WAN MIB trap events, use the **gsm event modem-state mib-trap** command in controller configuration mode.

gsm event modem-state mib-trap {all | up | down}

Syntax Description

all	Sends MIB trap events when the modem is up or down.
up	Sends MIB trap events when the modem is up.
down	Sends MIB trap events when the modem is down.

Command Default

None

Command Modes

Controller configuration (config-controller)

Command History

Release	Modification
15.1(3)T	This command was introduced.

Examples

The following example configures the router to send MIB trap events only when the modem is down:

```
router(config-controller)# gsm event modem-state mib-trap down
```

Related Commands

Command	Description
gsm event connection-status mib-trap	Checks the connection status of a 3G WAN MIB trap event.
gsm event network mib-trap	Sends 3G WAN MIB trap events when network changes occur.
gsm event service mib-trap	Sends 3G WAN MIB trap events when service changes occur.

gsm event network mib-trap

To configure the router to send 3G WAN MIB trap events when network changes occur, use the **gsm event network mib-trap** command in controller configuration mode.

gsm event network mib-trap

Command Default

None

Command Modes

Controller configuration (config-controller)

Command History

Release	Modification
15.1(3)T	This command was introduced.

Examples

The following example configures the router to send MIB trap events in response to network changes (for example, switching from an AT&T network to a Verizon network):

```
router(config-controller)# gsm event network mib-trap
```

Related Commands

Command	Description
gsm event connection-status mib-trap	Checks the connection status of a 3G WAN MIB trap event.
gsm event modem-state mib-trap	Sets the modem state for sending 3G WAN MIB trap events.
gsm event service mib-trap	Sends 3G WAN MIB trap events when service changes occur.

gsm event rssi abate

To set the RSSI abate threshold value for sending 3G WAN MIB trap events, use the **gsm event rssi abate** command in controller configuration mode.

gsm event rssi abate {mib-trap *mibtrap* **|** **threshold** *threshold-value***}**

Syntax Description

mib-trap *mibtrap*	Specifies the mib-trap technology: • **All-gsm**—All the GSM/UMTS Services. • **edge**—EDGE Service. • **gprs**—GPRS Service. • **hsdpa**—HSDPA Service. • **hspa**—HSPA Service. • **hspa-plus**—HSPA Plus Service. • **hsupa**—HSUPA Service. • **umts/wcdma**—UMTS/WDMA Service.
threshold *threshold-value*	Sets the threshold for sending MIB trap events to the specified value. When the RSSI abate value is greater than the specified threshold (signal getting weaker), a MIB trap event is sent to the administrator. The range of the threshold value is from -150 to 0 dBm.

Command Modes

Controller configuration (config-controller)

Command History

Release	Modification
15.1(3)T	This command was introduced.

Examples

The following example configures the router to send MIB trap events for all supported GSM technologies when the RSSI abate threshold is greater than -50 dBm:

```
router(config-controller)# gsm event rssi abate mib-trap All-gsm
router(config-controller)# gsm event rssi abate threshold -50
```

The following example configures the router to send MIB trap events on the EDGE network when the RSSI abate threshold is greater than -100 dBm:

```
router(config-controller)# gsm event rssi abate mib-trap edge
router(config-controller)# gsm event rssi abate threshold -100
```

Related Commands

Command	Description
gsm event rssi onset	Sets the RSSI onset threshold value for sending 3G WAN MIB trap events.

gsm event rssi onset

To set the RSSI onset threshold value for sending 3G WAN MIB trap events, use the **gsm event rssi onset** command in controller configuration mode.

gsm event rssi onset {mib-trap *mibtrap* **| threshold** *threshold-value***}**

Syntax Description

mib-trap *mibtrap*	Specifies the mib-trap network on which to send the MIB trap: • **All-gsm**—All the GSM/UMTS Services. • **edge**—EDGE Service. • **gprs**—GPRS Service. • **hsdpa**—HSDPA Service. • **hspa**—HSPA Service. • **hspa-plus**—HSPA Plus Service. • **hsupa**—HSUPA Service. • **umts/wcdma**—UMTS/WDMA Service.
threshold *threshold-value*	Sets the threshold for sending MIB trap events to the specified value. When the RSSI value is less than the specified onset threshold (signal getting stronger), a MIB trap event is sent to the administrator. The range of the threshold value is from -150 to 0 dBm.

Command Modes

Controller configuration (config-controller)

Command History

Release	Modification
15.1(3)T	This command was introduced.

Examples

The following example configures the router to send MIB trap events on all supported GSM networks when the RSSI value is below the onset threshold of -50 dBm:

```
router(config-controller)# gsm event rssi onset mib-trap All-gsm
router(config-controller)# gsm event rssi onset threshold -50
```

The following example configures the router to send MIB trap events on the EDGE network when the RSSI value is below the onset threshold of -100 dBm:

```
router(config-controller)# gsm event rssi onset mib-trap edge
router(config-controller)# gsm event rssi onset threshold -100
```

Related Commands

Command	Description
gsm event rssi abate	Sets the RSSI abate threshold value for sending 3G WAN MIB trap events.

gsm event service mib-trap

To configure the router to send 3G WAN MIB trap events when service changes occur, use the **gsm event service mib-trap** command in controller configuration mode.

gsm event service mib-trap

Command Default

None

Command Modes

Controller configuration (config-controller)

Command History

Release	Modification
15.1(3)T	This command was introduced.

Examples

The following example configures the router to send MIB trap events in response to service changes (for example, switching from EDGE to GPRS):

```
router(config-controller)# gsm event network mib-trap
```

Related Commands

Command	Description
gsm event connection-status mib-trap	Checks the connection status of a 3G WAN MIB trap event.
gsm event modem-state mib-trap	Sets the modem state for sending 3G WAN MIB trap events.
gsm event network mib-trap	Sends 3G WAN MIB trap events when network changes occur.

gsm event temperature abate

To set the temperature abate threshold value for sending 3G WAN MIB trap events, use the **gsm event temperature abate** command in controller configuration mode.

gsm event temperature abate {mib-trap | threshold *threshold-value***}**

Syntax Description

mib-trap	Enables or disables temperature abate MIB trap events.
threshold *threshold-value*	Sets the threshold in Celsius for sending MIB trap events to the specified value. When the temperature abate value is less than the specified threshold (lower temperature), a MIB trap event is sent to the administrator. The range of the threshold value is from -58 to 212°F (-50 to 100°C).

Command Modes

Controller configuration (config-controller)

Command History

Release	Modification
15.1(3)T	This command was introduced.

Examples

The following example enables temperature abate MIB trap events, then configures the router to send MIB trap events when the temperature goes below 32°F (0°C):

```
router(config-controller)# gsm event temperature abate mib-trap
router(config-controller)# gsm event temperature abate threshold 0
```

Related Commands

Command	Description
gsm event temperature onset	Sets the temperature onset threshold value.

gsm event temperature onset

To set the temperature onset threshold value for sending 3G WAN MIB trap events, use the **gsm event temperature onset** command in controller configuration mode.

gsm event temperature onset {mib-trap | threshold *threshold-value***}**

Syntax Description

mib-trap	Enables or disables temperature onset MIB trap events.
threshold *threshold-value*	Sets the threshold in Celsius for sending MIB trap events to the specified value. When the temperature onset value is greater than the specified threshold (higher temperature), a MIB trap event is sent to the administrator. The range of the threshold value is from -58 to 212°F (-50 to 100°C).

Command Modes

Controller configuration (config-controller)

Command History

Release	Modification
15.1(3)T	This command was introduced.

Examples

The following example enables temperature onset MIB trap events, then configures the router to send MIB trap events when temperature goes above 32°F (0°C):

```
router(config-controller)# gsm event temperature onset mib-trap
router(config-controller)# gsm event temperature onset threshold 0
```

Related Commands

Command	Description
gsm event temperature abate	Sets the temperature abate threshold value.

gsm failovertimer

To set the timeout period before an ISR with dual SIMs fails over to the secondary SIM, use the **gsm failovertimer** command in controller configuration mode.

gsm failovertimer *1–7*

Syntax Description

1–7	Failover timeout period (from 1 to 7 minutes). The default timeout period is 2 minutes.

Command Modes

Controller configuration (config-controller)

Command History

Release	Modification
15.1(4)M	This command was introduced.

Usage Guidelines

This command applies to ISRs only.

Examples

The following example shows how to set the SIM switchover timeout period to 3 minutes:

```
router#conf t
router(config-controller)# gsm failovertimer 3
```

Related Commands

Command	Description
gsm sim authenticate	Authenticates the SIM card.
gsm sim max-retry	Specifies the maximum number of failover retries.
gsm sim primary slot	Modifies the primary slot assignment.
gsm sim profile	Configures the SIM profile.

gsm gps mode

To enable the GPS mode, use the **gsm gps mode** command in privileged EXEC mode.

gsm gps mode standalone

Syntax Description

standalone	Autonomous GPS without assistance data. The Mobile Station (MS) computes its own location; no position determination equipment (PDE) is required. This is the Default mode.

Command Default

Autonomous GPS without assistance data is enabled.

Command Modes

Privileged EXEC (#)

Command History

Release	Modification
15.1(3)T	This command was introduced.

Examples

The following example enables the standalone GPS mode:

```
router#conf t
router(config)# gsm gps mode standalone
```

Related Commands

Command	Description
debug cellular messages gps	Displays the GPS background activities for debugging purposes.
show cellular gps	Displays GPS statistics.

gsm gps nmea

To enable or disable GPS National Marine Electronics Association (NMEA) stream state, use the **gsm gps nmea** command in privileged EXEC mode.

gsm gps nmea

Command Modes

Privileged EXEC (#)

Command History

Release	Modification
15.1(3)T	This command was introduced.

Examples

The following example enables the NMEA stream state:

```
router# gsm gps nmea
```

Related Commands

Command	Description
debug cellular messages nmea	Displays NMEA background activities for debugging purposes.

gsm radio off

To shutdown the radio hardware resources when none of the PDP contexts are in use, particularly in areas where wireless user density is huge, and to turn on power save mode, use the **gsm radio off** command in controller configuration mode. To turn off the power save mode or to turn on the radio, use the **no** form of this command.

gsm radio off

no gsm radio off

Command Default

None

Command Modes

Controller configuration (config-controller)

Command History

Release	Modification
15.1(1)T	This command was introduced.

Usage Guidelines

To check whether power save mode is ON or OFF on an EHWIC or Cisco ISR, use the **show controller cellular** *pabay hwic slot subslot* command or the **show run** command and check for the relevant information.

Note When you use the **no** form of the **gsm radio off** command, you also must enter a **no shut** command on the cellular interface.

Examples

The following example shows the output for this command when you enter a correct MEP PIN:

```
router(config-controller)# gsm radio off
Warning: Not all PDP contexts are in shutdown state
Please shutdown all the interfaces manually and re-enter this command.
router(config-controller)#
router(config-controller)#int c0
router(config-if)#shut
router(config-if)#
router(config-if)#exit
router(config)#controller cellular 0
router(config-controller)#gsm radio off
WARNING(Controller cellular 0/0): Radio power OFF setting will NOT persists if router
or modem resets. Save to startup configuration.Use "no gsm radio off" to turn radio power
ON

router(config-controller)#end
router#
```

To verify, use the **show run**, the **show controller,** or the **show cellular radio** commands. The following examples shows the sample output when the radio is turned off for the three commands:

```
show run
router#sh run
Building configuration...
!
controller Cellular 0
 gsm radio off <<<===
!

show controller c0
router#sh controller cellular 0

Interface Cellular0
3G Modem-HSPA/UMTS/EDGE/GPRS-850/900/1800/1900/2100MHz / Global,
Power save mode is ON  <<<====

show cellular 0 radio
router#sh cellular 0 radio
Radio power mode = OFF <<<===, Reason = User request
Current Band = None, Channel Number = 0
Current RSSI = -110 dBm
Band Selected = Auto
Number of nearby cells = 1
Cell 1
        Primary Scrambling Code = 0xA9
        RSCP = -100 dBm, ECIO = -12 dBm

router#
```

Related Commands

Command	Description
show cellular network	Displays information about the carrier network and service.
show controller	Displays EHWIC hardware and driver-specific information.
show running-config	Displays the contents of the current running configuration file.

gsm sim authenticate

To store the SIM CHV1 code for verification, use the **gsm sim authenticate slot** command in controller configuration mode.

gsm sim authenticate *0,7 pin* **slot** *0–1*

Syntax Description

0,7	Authentication type: 0—Specifies an unencrypted (cleartext) PIN that follows this parameter. 7—Specifies a hidden PIN that follows this parameter.
pin	A 4 to 8 character code provided by your carrier to lock or unlock the SIM card.
0–1	Slot number. Either 0 or 1.

Command Modes

Controller configuration (config-controller)

Command History

Release	Modification
15.1(1)T	This command was introduced.
15.1(4)M	This command was modified.

Usage Guidelines

This command works only when the SIM is locked. If you enter it incorrectly several times, the SIM is blocked. To avoid this, when CHV1 verification fails, you must re-enter the CHV1 code to initiate verification.

Examples

The following example shows how to authenticate using an unencrypted PIN:

```
router(config-controller)# gsm sim authenticate 0 1234 slot 0
```

Related Commands

Command	Description
cellular gsm sim lock	Locks or unlocks the SIM card provided by the service provider by enabling or disabling the CHV1 code.
gsm failovertimer	Sets the failover timer.
gsm sim max-retry	Specifies the maximum number of failover retries.
gsm sim primary slot	Modifies the primary slot assignment.
gsm sim profile	Configures the SIM profile.

gsm sim max-retry

To specify the maximum number of times that the fixed-platform ISR can switch over between its two SIM cards when a SIM card loses service, use the **gsm sim max-retry** command in controller configuration mode.

gsm sim max-retry *0–65535*

Syntax Description

0–65535	Maximum number of times the switchover between the two SIM cards can occur.

Command Modes

Controller configuration (config-controller)

Command History

Release	Modification
15.1(4)M	This command was introduced.

Usage Guidelines

When the primary SIM loses service, the ISR automatically tries to switch over to the secondary SIM.

If you do not set the maximum number of tries, the ISR tries to the switchover for a maximum of 10 times (default).

Setting the number of retries to 0 disables the automatic switchover and keeps the service tied to one SIM (the primary SIM).

Every time a SIM switchover occurs, a counter is incremented until it reaches the maximum number of switchover attempts. Then, service is tied to one SIM (the primary SIM) and automatic SIM switchover is stopped.

To see the number of switchover attempts, use the **show cellular 0 security** command.

Examples

The following example shows how to set the maximum number of SIM switchover retries to 20:

```
router(config-controller)# gsm sim max-retry 20
```

Related Commands

Command	Description
gsm failovertimer	Sets the failover timer.
gsm sim authenticate	Authenticates the SIM card.
gsm sim primary slot	Modifies the primary slot assignment.
gsm sim profile	Configures the SIM profile.

gsm sim primary slot

To set a SIM slot to be the primary slot on a fixed-platform ISR, such as C881G-U-K9, use the **gsm sim primary slot** command in controller configuration mode.

gsm sim primary slot *0–1*

Syntax Description

0–1	Slot number. By default, slot 0 is the primary slot.

Command Modes

Controller configuration (config-controller)

Command History

Release	Modification
15.1(4)M	This command was introduced.

Examples

The following example shows how to set slot 1 as the primary slot:

```
router(config-controller)# gsm sim primary slot 1
```

Related Commands

Command	Description
gsm failovertimer	Sets the failover timer.
gsm sim authenticate	Authenticates the SIM card.
gsm sim max-retry	Specifies the maximum number of failover retries.
gsm sim profile	Configures the SIM profile.

gsm sim profile

To configure the SIM profile, use the **gsm sim profile** command in controller configuration mode.

gsm sim profile *1–16* **slot** *0–1*

Syntax Description

1–16	Profile number (a value from 1 to 16).
0–1	Slot number. Either 0 or 1.

Command Modes

Controller configuration (config-controller)

Command History

Release	Modification
15.1(4)M	This command was introduced.

Usage Guidelines

To create a profile, use the **cellular gsm profile create** command. For more information, see the "Configuring a Modem Data Profile" section on page 50.

To display a list of all profiles, use the **show cellular profile** command.

Examples

The following example shows how to configure the SIM card in slot 0 to use profile 10:

```
router(config-controller)# gsm sim profile 10 slot 0
```

Related Commands

Command	Description
gsm failovertimer	Sets the failover timer.
gsm sim authenticate	Authenticates the SIM card.
gsm sim max-retry	Specifies the maximum number of failover retries.
gsm sim primary slot	Modifies the primary slot assignment.

gsm sms archive path

To configure the FTP settings of the directory used to archive SMS, use the **gsm sms archive path** command in controller configuration mode.

gsm sms archive path ftp:*FTP-path*

Syntax Description

ftp:*FTP-path*	Path to the directory on the FTP server used to archive SMS messages.

Command Default

None

Command Modes

Controller configuration (config-controller)

Command History

Release	Modification
15.1(3)T	This command was introduced.

Examples

The following example sets the FTP path to the SMS_archive directory on the FTP server at 192.168.1.3:

```
router(config-controller)#
gsm sms archive path ftp://username:password@192.168.1.3/SMS_archive
```

Related Commands

Command	Description
cellular gsm sms delete	Deletes SMS messages on the GSM band.
cellular gsm sms send	Sends outgoing SMS messages on the GSM band.
cellular gsm sms view	Displays all incoming messages stored on the SIM card.
debug cellular messages sms	Displays SMS background activities for debugging purposes.
show cellular sms	Displays SMS statistics.

show cellular all

To display all the modem information in one listing, use the **show cellular all** command in privileged EXEC mode.

show cellular *unit* **all**

Syntax Description

unit	(EHWIC) Router slot, WIC slot, and port separated by slashes (for example, 0/1/0). (Fixed platform) The number 0.

Command Modes

Privileged EXEC (#)

Command History

Release	Modification
12.4(11)XV	This command was introduced.
12.4(15)T	This command was integrated into Cisco IOS Release 12.4(15)T.

Usage Guidelines

The command usage is the same for Global System for Mobile Communications (GSM) and code division multiple access (CDMA), although the output is different for each.

Examples

The following example shows the output from the **show cellular all** command for slot 0, WIC slot 0, and port 0:

```
router# show cellular 0/0/0 all

Hardware Information
====================
Modem Firmware Version = U1_2_22MCAP G:/WORK
Modem Firmware built = 04/17/06
Hardware Version = E2
International Mobile Subscriber Identity (IMSI) = 001012345678901
International Mobile Equipment Identity (IMEI) = 352678010002779
Factory Serial Number (FSN) = S2128751274E2OK
Modem Status = Online
Current Modem Temperature = 28 deg C, State = Normal

Profile Information
====================
Profile 1 = INACTIVE*
--------
PDP Type = IPv4, Header Compression = OFF
Data Compression = OFF
Access Point Name (APN) = vpn.com
Authentication = CHAP
Username: wapuser1, Password: wap

 * - Default profile
Data Connection Information
===========================
```

```
Data Transmitted = 0 bytes, Received = 0 bytes
Profile 1, Packet Session Status = INACTIVE
        Inactivity Reason = Normal inactivate state
Profile 2, Packet Session Status = INACTIVE
        Inactivity Reason = Normal inactivate state
Profile 3, Packet Session Status = INACTIVE
        Inactivity Reason = Normal inactivate state
Profile 4, Packet Session Status = INACTIVE
        Inactivity Reason = Normal inactivate state
Profile 5, Packet Session Status = INACTIVE
        Inactivity Reason = Normal inactivate state
Profile 6, Packet Session Status = INACTIVE
        Inactivity Reason = Normal inactivate state
Profile 7, Packet Session Status = INACTIVE
        Inactivity Reason = Normal inactivate state
Profile 8, Packet Session Status = INACTIVE
        Inactivity Reason = Normal inactivate state
Profile 9, Packet Session Status = INACTIVE
        Inactivity Reason = Normal inactivate state
Profile 10, Packet Session Status = INACTIVE
        Inactivity Reason = Normal inactivate state
router#
Network Information
===================
Current Service Status = No service, Service Error = None
Current Service = Invalid
Packet Service = None
Packet Session Status = Inactive
Current Roaming Status = Home
Network Selection Mode = Automatic
Country = 0, Network =
Mobile Country Code (MCC) = 0
Mobile Network Code (MNC) = 0
Location Area Code (LAC) = 0
Routing Area Code (RAC) = 255
Cell ID = 0
Primary Scrambling Code = 0
PLMN Selection = Automatic

Radio Information
=================
Current Band = None, Channel Number = 0
Current RSSI = -110 dBm

Modem Security Information
==========================
Card Holder Verification (CHV1) = Disabled
SIM Status = OK
SIM User Operation Required = None
Number of Retries remaining = 3
```

The following example shows the output of running the **show cellular all** command on the C881G+R7-K9 ISR:

```
C881G+R7-K9# show cellular 0 all
Hardware Information
====================
Modem Firmware Version = T1_0_3_2AP R361 CNS
Modem Firmware built = 04/15/11
Hardware Version = 1.0
International Mobile Subscriber Identity (IMSI) = 310410249752596
International Mobile Equipment Identity (IMEI) = 353567040022965
Integrated Circuit Card ID (ICCID) = 89014102232497525965
Mobile Subscriber International Subscriber
```

```
IDentity Number (MSISDN) = 14083910358
Factory Serial Number (FSN) = CC3291004211001
Modem Status = Online
Current Modem Temperature = 33 deg C, State = Normal
PRI SKU ID = 9900198, SKU Rev. = 1.1

Profile Information
====================
Profile 1 = INACTIVE*
--------
PDP Type = IPv4
Access Point Name (APN) = isp.cingular
Authentication = CHAP
Username: ISP@CINGULARGPRS.COM, Password: CINGULAR1

Profile 2 = INACTIVE
--------
PDP Type = IPv4
Access Point Name (APN) = isp.cingular
Authentication = CHAP
Username: ISP@CINGULARGPRS.COM, Password: CINGULAR1

Profile 3 = INACTIVE
--------
PDP Type = IPv4
Access Point Name (APN) = ccspbsc064.acfes.org
Authentication = CHAP
Username: noname, Password: nopassword

Profile 4 = INACTIVE
--------
PDP Type = IPv4
Access Point Name (APN) = wap.voicestream.com
Authentication = None
Username: , Password:

Profile 5 = INACTIVE
--------
PDP Type = IPv4
Access Point Name (APN) = epc.tmobile.com
Authentication = None
Username: , Password:

 * - Default profile

Configured default profile for active SIM 0 is profile 1.


Data Connection Information
===========================
Data Transmitted = 243966 bytes, Received = 12900 bytes
Profile 1, Packet Session Status = INACTIVE
    Inactivity Reason = Normal inactivate state
Profile 2, Packet Session Status = INACTIVE
    Inactivity Reason = Normal inactivate state
Profile 3, Packet Session Status = INACTIVE
    Inactivity Reason = Normal inactivate state
Profile 4, Packet Session Status = INACTIVE
    Inactivity Reason = Normal inactivate state
Profile 5, Packet Session Status = INACTIVE
    Inactivity Reason = Normal inactivate state
Profile 6, Packet Session Status = INACTIVE
    Inactivity Reason = Normal inactivate state
Profile 7, Packet Session Status = INACTIVE
```

```
    Inactivity Reason = Normal inactivate state
Profile 8, Packet Session Status = INACTIVE
    Inactivity Reason = Normal inactivate state
Profile 9, Packet Session Status = INACTIVE
    Inactivity Reason = Normal inactivate state
Profile 10, Packet Session Status = INACTIVE
    Inactivity Reason = Normal inactivate state
Profile 11, Packet Session Status = INACTIVE
    Inactivity Reason = Normal inactivate state
Profile 12, Packet Session Status = INACTIVE
    Inactivity Reason = Normal inactivate state
Profile 13, Packet Session Status = INACTIVE
    Inactivity Reason = Normal inactivate state
Profile 14, Packet Session Status = INACTIVE
    Inactivity Reason = Normal inactivate state
Profile 15, Packet Session Status = INACTIVE
    Inactivity Reason = Normal inactivate state
Profile 16, Packet Session Status = INACTIVE
    Inactivity Reason = Normal inactivate state

Network Information
===================
Current Service Status = No service, Service Error = None
Current Service = Combined
Packet Service = None
Packet Session Status = Inactive
Current Roaming Status = Home
Network Selection Mode = Automatic
Country = USA, Network = AT&T
Mobile Country Code (MCC) = 310
Mobile Network Code (MNC) = 410
Location Area Code (LAC) = 56971
Routing Area Code (RAC) = 255
Cell ID = 0
Primary Scrambling Code = 0
PLMN Selection = Automatic

Radio Information
=================
Radio power mode = ON
Current Band = None, Channel Number = 0
Current RSSI = -110 dBm
Band Selected = Auto
Number of nearby cells = 1
Cell 1
    Primary Scrambling Code = 0x106
    RSCP = -121 dBm, ECIO = -31 dBm


Modem Security Information
==========================
Active SIM = 0
SIM switchover attempts = 0
Card Holder Verification (CHV1) = Disabled
SIM Status = OK
SIM User Operation Required = None
Number of CHV1 Retries remaining = 1

GPS Information
===========================

GPS Info
-------------
GPS State: GPS disabled
```

```
SMS Information
===============
Incoming Message Information
----------------------------
SMS stored in modem = 5
SMS archived since booting up = 0
Total SMS deleted since booting up = 0
Storage records allocated = 30
Storage records used = 5
Number of callbacks triggered by SMS = 0
Number of successful archive since booting up = 0
Number of failed archive since booting up = 0

Outgoing Message Information
----------------------------
Total SMS sent successfully = 0
Total SMS send failure = 0
Number of outgoing SMS pending = 0
Number of successful archive since booting up = 0
Number of failed archive since booting up = 0
Last Outgoing SMS Status = SUCCESS
Copy-to-SIM Status =     0x0
Send-to-Network Status = 0x0
Report-Outgoing-Message-Number:
  Reference Number =     0
  Result Code =          0x0
  Diag Code =            0x0 0x0 0x0 0x0 0x0

SMS Archive URL =
```

Related Commands

Command	Description
show cellular security	Displays the modem lock state.
show controllers cellular	Displays EHWIC hardware and driver-specific information.

show cellular connection

To display the current active connection state and data statistics, use the **show cellular connection** command in privileged EXEC mode.

show cellular *unit* **connection**

Syntax Description

unit	(EHWIC) Router slot, WIC slot, and port separated by slashes (for example, 0/1/0). (Fixed platform) The number 0.

Command Modes

Privileged EXEC (#)

Command History

Release	Modification
12.4(11)XV	This command was introduced.
12.4(15)T	This command was integrated into Cisco IOS Release 12.4(15)T.

Usage Guidelines

The command usage is the same for Global System for Mobile Communications (GSM) and code division multiple access (CDMA), although the output is different for each.

Examples

The following is a sample output for slot 1, wic 0, and port 1:

```
router# show cellular 1/0/1 connection
Data Transmitted = 1066807500 bytes, Received = 1066807500 bytes
Profile 1, Packet Session Status = ACTIVE
        IP address = 1.5.97.2
Profile 2, Packet Session Status = INACTIVE
        Inactivity Reason = Normal inactivate state
```

Table 10 describes each output field.

Table 10 show cellular connection Field Description

Field	Description
Data Transmitted	Total data transmitted by the modem. Can be cleared by the **clear counters** command.
Data Received	Total data received by the modem. Can be cleared by the **clear counters** command.
Profile <profile number>	Indicates the profiles configured in the modem. A total of 16 profiles can be configured.
Packet Session Status	Packet Data Protocol (PDP) session status of the profile. Active when the call is made and PDP context has become active in the modem.

Table 10 show cellular connection Field Description (continued)

Field	Description
IP Address	IP address of the cellular interface received during IPCP negotiation.
Inactivity Reason	Reason why the profile is inactive.

The following example shows the output of running the **show cellular connection** command on the C881G+R7-K9 ISR:

```
C881G+R7-K9# show cellular 0 connection
Data Transmitted = 243966 bytes, Received = 12900 bytes
Profile 1, Packet Session Status = INACTIVE
    Inactivity Reason = Normal inactivate state
Profile 2, Packet Session Status = INACTIVE
    Inactivity Reason = Normal inactivate state
Profile 3, Packet Session Status = INACTIVE
    Inactivity Reason = Normal inactivate state
Profile 4, Packet Session Status = INACTIVE
    Inactivity Reason = Normal inactivate state
Profile 5, Packet Session Status = INACTIVE
    Inactivity Reason = Normal inactivate state
Profile 6, Packet Session Status = INACTIVE
    Inactivity Reason = Normal inactivate state
Profile 7, Packet Session Status = INACTIVE
    Inactivity Reason = Normal inactivate state
Profile 8, Packet Session Status = INACTIVE
    Inactivity Reason = Normal inactivate state
Profile 9, Packet Session Status = INACTIVE
    Inactivity Reason = Normal inactivate state
Profile 10, Packet Session Status = INACTIVE
    Inactivity Reason = Normal inactivate state
Profile 11, Packet Session Status = INACTIVE
    Inactivity Reason = Normal inactivate state
Profile 12, Packet Session Status = INACTIVE
    Inactivity Reason = Normal inactivate state
Profile 13, Packet Session Status = INACTIVE
    Inactivity Reason = Normal inactivate state
Profile 14, Packet Session Status = INACTIVE
    Inactivity Reason = Normal inactivate state
Profile 15, Packet Session Status = INACTIVE
    Inactivity Reason = Normal inactivate state
Profile 16, Packet Session Status = INACTIVE
    Inactivity Reason = Normal inactivate state
```

Related Commands

Command	Description
show cellular hardware	Displays the cellular modem hardware information.
show cellular network	Displays the cellular network (base station) information.
show cellular profile	Displays the cellular profile information.
show cellular security	Displays the modem lock state.

show cellular gps

To display GPS statistics, use the **show cellular gps** command in privileged EXEC mode.

show cellular *unit* **gps**

Syntax Description

unit	(EHWIC) Router slot, WIC slot, and port separated by slashes (for example, 0/1/0). (Fixed platform) The number 0.

Command Modes

Privileged EXEC (#)

Command History

Release	Modification
15.1(3)T	This command was introduced.

Examples

The following example displays the GPS statistics on an EHWIC card:

```
router# show cellular 0/0/0 gps
```

The following example shows the output of running the **show cellular gps** command on the C881G+R7-K9 ISR:

```
C881G+R7-K9# show cellular 0 gps
Jul 22 09:57:35.371 PST: %SYS-5-CONFIG_I: Configured from console by console

GPS Info
-------------
GPS State: GPS acquiring
GPS Mode Configured: standalone
Latitude: 0 Deg 0 Min 0 Sec North
Longitude: 0 Deg 0 Min 0 Sec East
Timestamp (GMT): Sat Jan  5 16:00:00 1980

Fix type: 2D
Satellite Info
----------------
```

Related Commands

Command	Description
debug cellular messages gps	Displays the GPS background activities for debugging purposes.
gsm gps mode	Enables the GPS mode.

show cellular hardware

To display the cellular modem hardware information, use the **show cellular hardware** command in privileged EXEC mode.

show cellular *unit* **hardware**

Syntax Description

unit	(EHWIC) Router slot, WIC slot, and port separated by slashes (for example, 0/1/0). (Fixed platform) The number 0.

Command Modes

Privileged EXEC (#)

Command History

Release	Modification
12.4(11)XV	This command was introduced.
12.4(15)T	This command was integrated into Cisco IOS Release 12.4(15)T.
15.1(3)T1	A new line was added (Endpoint Port Map).

Usage Guidelines

The command usage is the same for Global System for Mobile Communications (GSM) and code division multiple access (CDMA), although the output is different for each.

Examples

The following example shows the output for slot 0, WIC slot 1, and port 0 on an EHWIC-3G-HSPA+7:

```
router# show cellular 0/0/0 hardware
Modem Firmware Version = T1_0_3_2AP R361 CNSZ
Modem Firmware built = 04/15/11
Hardware Version = 1.0
International Mobile Subscriber Identity (IMSI) = 00112345678901
International Mobile Equipment Identity (IMEI) = 353567040022593
Integrated Circuit Card ID (ICCID) = 89600109080705907544
Mobile Subscriber International Subscriber
IDentity Number (MSISDN) =
Factory Serial Number (FSN) = CC3291002451001
Modem Status = Online
Current Modem Temperature = 22 deg C, State = Normal
PRI SKU ID = 9900198, SKU Rev. = 1.1
```

The following example shows the output of running the **show cellular hardware** command on the C881G+R7-K9 ISR:

```
C881G+R7-K9# show cellular 0 hardware
Modem Firmware Version = T1_0_3_2AP R361 CNS
Modem Firmware built = 04/15/11
Hardware Version = 1.0
International Mobile Subscriber Identity (IMSI) = 310410249752596
International Mobile Equipment Identity (IMEI) = 353567040022965
Integrated Circuit Card ID (ICCID) = 89014102232497525965
Mobile Subscriber International Subscriber
IDentity Number (MSISDN) = 14083910358
Factory Serial Number (FSN) = CC3291004211001
Modem Status = Online
Current Modem Temperature = 33 deg C, State = Normal
PRI SKU ID = 9900198, SKU Rev. = 1.1
```

Related Commands

Command	Description
show cellular security	Displays the modem lock state.
show controllers cellular	Displays EHWIC hardware- and driver-specific information.

show cellular network

To display information about the carrier network and service, use the **show cellular network** command in privileged EXEC mode.

show cellular *unit* **network**

Syntax Description

unit	(EHWIC) Router slot, WIC slot, and port separated by slashes (for example, 0/1/0). (Fixed platform) The number 0.

Command Modes

Privileged EXEC (#)

Command History

Release	Modification
12.4(11)XV	This command was introduced.
12.4(15)T	This command was integrated into Cisco IOS Release 12.4(15)T.

Usage Guidelines

The command usage is the same for Global System for Mobile Communications (GSM) and code division multiple access (CDMA), although the outputs differ.

Examples

The following example shows the output of the **show cellular network** command:

```
router# show cellular 0/0/0 network
Current Service Status = Normal, Service Error = None
Current Service = Combined
Packet Service = UMTS/WCDMA (Attached)
Packet Session Status = Inactive
Current Roaming Status = Roaming
Network Selection Mode = Automatic
Country = USA, Network = CINGULAR
Mobile Country Code (MCC) = 310
Mobile Network Code (MNC) = 380
Location Area Code (LAC) = 56997
Routing Area Code (RAC) = 253
Cell ID = 4503
Primary Scrambling Code = 169
PLMN Selection = Automatic
Registered PLMN = Cingular , Abbreviated =
Service Provider =
```

Table 11 describes each output field.

Table 11 show cellular hardware Field Description

Field	Description
Current Service Status	Indicates whether service is available.
Current Service Error	Shows the error in case there is no service.
Current Idle Digital Mode	Idle mode of the modem.
Packet Service	Indicates the type of service available. For normal operation, the modem should be attached.
Packet Session Status	Status of PDP session. When data transfer is taking place, packet session will be active.
Current Roaming Status	Indicates whether the modem is in the home network or is roaming.
Network Selection Mode	Can be manual selection mode or automatic selection mode. Set to automatic by default.
Country	Country string given by the base station.
Network	Network string given by the base station.
Mobile Country Code	Country code given by the base station. The modem will be in the home network only if the country code given by the base station matches the MCC of the IMSI and the network code given by the base station matches the MNC of the IMSI.
Mobile Network Code	Network code given by the base station. The modem will be in the home network only if the country code given by the base station matches the MCC of the IMSI and the network code given by the base station matches the MNC of the IMSI.
Location Area Code	LAC given by the base station.
Routing Area Code	RAC given by the base station.
Cell ID	Cell ID given by the base station.
PLMN Selection	Default is automatic.

The following example shows the output of running the **show cellular network** command on the C881G+R7-K9 ISR:

```
C881G+R7-K9# show cellular 0 network
Current Service Status = No service, Service Error = None
Current Service = Combined
Packet Service = None
Packet Session Status = Inactive
Current Roaming Status = Home
Network Selection Mode = Automatic
Country = USA, Network = AT&T
Mobile Country Code (MCC) = 310
Mobile Network Code (MNC) = 410
Location Area Code (LAC) = 56971
Routing Area Code (RAC) = 255
Cell ID = 0
Primary Scrambling Code = 0
PLMN Selection = Automatic
```

Related Commands

Command	Description
show cellular security	Displays the modem lock state.
show controllers cellular	Displays EHWIC hardware and driver-specific information.

show cellular profile

To display the cellular profile information, use the **show cellular profile** command in privileged EXEC mode.

show cellular *unit* **profile**

Syntax Description

unit	(EHWIC) Router slot, WIC slot, and port separated by slashes (for example, 0/1/0). (Fixed platform) The number 0.

Command Modes

Privileged EXEC (#)

Command History

Release	Modification
12.4(11)XV	This command was introduced.
12.4(15)T	This command was integrated into Cisco IOS Release 12.4(15)T.

Usage Guidelines

The command usage is the same for Global System for Mobile Communications (GSM) and code division multiple access (CDMA), although the output is different for each.

Examples

The following example shows how to display a list of profiles configured on an EHWIC card:

```
router# show cellular 0/1/1 profile

Profile 1 = ACTIVE
--------
PDP Type = IPv4, Header Compression = ON
Data Compression = ON
PDP address = 0x7F000201
Access Point Name (APN) = enzo.cisco.com
Authentication = CHAP
Username: cisco, Password: lab
Primary DNS address = 127.0.2.1
Source Address = 127.0.2.1 255.255.255.0

Profile 2 = INACTIVE
---------
PDP Type = IPv4, Header Compression = ON
Data Compression = ON
PDP address = 0x7F000202
Access Point Name (APN) = enzo.cingular.com
Authentication = CHAP
Username: cisco, Password: lab
Primary DNS address = 127.0.2.1
Source Address = 127.0.2.2 255.255.255.0
```

Table 12 Field Descriptions for show cellular profile command

Field	Description
Profile <number>	Shows whether a particular profile is ACTIVE or INACTIVE. The profile is ACTIVE when the PDP context is active. This happens when a data call is successfully established.
PDP Type	Indicates the packet data protocol (PDP) type. Supported type is IPv4.
PDP Address	Shows the IP address assigned for the PDP context during PPP negotiation.
Access Point Name	Access Point Name for the profile. This information is provided by the service provider.
Authentication	PPP authentication supported. CHAP and PAP are supported. The type of authentication to be used is provided by the service provider.
Username	Username to be used for PPP authentication. This information is provided by the service provider.
Password	Password to be used for PPP authentication. This information is provided by the service provider.

The following example shows a list of profiles configured on a fixed-platform ISR:

```
router# show cellular 0 profile

Profile 1 = INACTIVE*
--------
PDP Type = IPv4
Access Point Name (APN) = zzz.net
Authentication = CHAP
Username: 123@zzz.net, Password: 123
Profile 2 = INACTIVE
--------
PDP Type = IPv4
Access Point Name (APN) = mmm.net
Authentication = CHAP
Username: 456, Password: 456
```

The following example shows the output of running the **show cellular profile** command on the C881G+R7-K9 ISR:

```
C881G+R7-K9# show cellular 0 profile
Profile 1 = INACTIVE*
--------
PDP Type = IPv4
Access Point Name (APN) = isp.cingular
Authentication = CHAP
Username: ISP@CINGULARGPRS.COM, Password: CINGULAR1

Profile 2 = INACTIVE
--------
PDP Type = IPv4
Access Point Name (APN) = isp.cingular
Authentication = CHAP
Username: ISP@CINGULARGPRS.COM, Password: CINGULAR1
```

```
Profile 3 = INACTIVE
--------
PDP Type = IPv4
Access Point Name (APN) = ccspbsc064.acfes.org
Authentication = CHAP
Username: noname, Password: nopassword

Profile 4 = INACTIVE
--------
PDP Type = IPv4
Access Point Name (APN) = wap.voicestream.com
Authentication = None
Username: , Password:

Profile 5 = INACTIVE
--------
PDP Type = IPv4
Access Point Name (APN) = epc.tmobile.com
Authentication = None
Username: , Password:

 * - Default profile

Configured default profile for active SIM 0 is profile 1.
```

show cellular radio

To display the cellular modem radio statistics, use the **show cellular radio** command in privileged EXEC mode.

show cellular *unit* **radio** [**history all** | **per-hour** | **per-min** | **per-sec**]

Syntax Description

unit	(EHWIC) Router slot, WIC slot, and port separated by slashes (for example, 0/1/0). (Fixed platform) The number 0.
history	Displays the RSSI history.
all	Complete RSSI history.
per-hour	Per-hour RSSI history.
per-min	Per-minute RSSI history.
per-sec	Per-second RSSI history.

Command Modes

Privileged EXEC (#)

Command History

Release	Modification
12.4(11)XV	This command was introduced.
12.4(15)T	This command was integrated into Cisco IOS Release 12.4(15)T.

Usage Guidelines

The command usage is the same for Global System for Mobile Communications (GSM) and code division multiple access (CDMA), although the output is different for each.

Examples

The following example shows the output for EHWIC-3G-HSPA+7 in slot 0, WIC slot 0, and port 0:

```
router# show cellular 0/0/0 radio
Radio power mode = ON
Current Band = None, Channel Number = 0
Current RSSI = -110 dBm
Band Selected = Auto
```

The following example shows the output of running the **show cellular radio** command on the C881G+R7-K9 ISR:

```
C881G+R7-K9# show cellular 0 radio
Radio power mode = ON
Current Band = None, Channel Number = 0
Current RSSI = -110 dBm
Band Selected = Auto
Number of nearby cells = 1
Cell 1
    Primary Scrambling Code = 0x106
    RSCP = -121 dBm, ECIO = -31 dBm
```

Related Commands

Command	Description
show cellular all	Displays the consolidated information about the modem.
show controllers cellular	Displays HWIC-hardware and driver-specific information.

show cellular security

To display the SIM status and modem lock state, use the **show cellular security** command in privileged EXEC mode.

show cellular *unit* **security**

Syntax Description

unit	(EHWIC) Router slot, WIC slot, and port separated by slashes (for example, 0/1/0). (Fixed platform) The number 0.

Command Modes

Privileged EXEC (#)

Command History

Release	Modification
12.4(11)XV	This command was introduced.
12.4(15)T	This command was integrated into Cisco IOS Release 12.4(15)T.

Usage Guidelines

The command usage is the same for Global System for Mobile Communications (GSM) and code division multiple access (CDMA), although the output is different for each.

Examples

The following example shows the output of this command:

```
router# show cellular 0/0/0 security
Card Holder Verification (CHV1) ENABLED
SIM Status = OK
SIM User Operation Required = CHV1
Number of Retries remaining = 3
```

Table 13 describes the output from the **show cellular security** command.

Table 13 show cellular security Field Description

Filed	Description
Card Holder Verification	If enabled, access to the SIM is restricted.
SIM Status	Indicates whether the SIM is present or removed from the SIM socket.
SIM User Operation Required	If the SIM is protected (for example, when CHV1 is enabled), it will indicate the type of user operation required.
Number of Retries Remaining	Indicates the number of attempts remaining in case the SIM is locked. If the number of retries becomes zero, the SIM is blocked and becomes unusable.

In the case of a fixed-platform ISR, such as C881G-U-K9, the **show cellular security** command displays the following information:

```
router# show cellular 0 security
Active SIM = 1
SIM switchover attempts = 0
Card Holder Verification (CHV1) = Disabled
SIM Status = OK
SIM User Operation Required = None
Number of CHV1 Retries remaining = 1
```

The following example shows the output of running the **show cellular security** command on the C881G+R7-K9 ISR:

```
C881G+R7-K9# show cellular 0 security
Active SIM = 0
SIM switchover attempts = 0
Card Holder Verification (CHV1) = Disabled
SIM Status = OK
SIM User Operation Required = None
Number of CHV1 Retries remaining = 1
```

show cellular sms

To display GPS statistics, including the number of incoming and outgoing messages, use the **show cellular sms** command in privileged EXEC mode.

show cellular *unit* **sms**

Syntax Description

unit	(EHWIC) Router slot, WIC slot, and port separated by slashes (for example, 0/1/0). (Fixed platform) The number 0.

Command Modes

Privileged EXEC (#)

Command History

Release	Modification
15.1(3)T	This command was introduced.

Examples

The following example displays the SMS statistics:

```
router# show cellular 0/0/0 sms
c1941#show cellular 0/0/0 sms
SMS Service is not available
Number of outgoing SMS pending = 0
c1941#show cellular 0/1/0 sms
Incoming Message Information
----------------------------
SMS stored in modem = 5
SMS archived since booting up = 0
Total SMS deleted since booting up = 0
Storage records allocated = 99
Storage records used = 5
Number of callbacks triggered by SMS = 0
Number of successful archive since booting up = 0
Number of failed archive since booting up = 0
Outgoing Message Information
----------------------------
Total SMS sent successfully = 0
Total SMS send failure = 0
Number of outgoing SMS pending = 0
Number of successful archive since booting up = 0
Number of failed archive since booting up = 0
Last Outgoing SMS Status = SUCCESS
SMS-Send-Status:
Error Class = 0x0
Cause Code = 0x0
SMS Archive URL = ftp://username:password@192.168.1.3/SMS_archive
```

The following example shows the output of running the **show cellular sms** command on the C881G+R7-K9 ISR:

```
C881G+R7-K9# show cellular 0 sms
Incoming Message Information
----------------------------
SMS stored in modem = 5
SMS archived since booting up = 0
Total SMS deleted since booting up = 0
Storage records allocated = 30
Storage records used = 5
Number of callbacks triggered by SMS = 0
Number of successful archive since booting up = 0
Number of failed archive since booting up = 0

Outgoing Message Information
----------------------------
Total SMS sent successfully = 0
Total SMS send failure = 0
Number of outgoing SMS pending = 0
Number of successful archive since booting up = 0
Number of failed archive since booting up = 0
Last Outgoing SMS Status = SUCCESS
Copy-to-SIM Status =     0x0
Send-to-Network Status = 0x0
Report-Outgoing-Message-Number:
  Reference Number =     0
  Result Code =          0x0
  Diag Code =            0x0 0x0 0x0 0x0 0x0

SMS Archive URL =
C881G+R7-K9#sh controller cellular
% Incomplete command.

C881G+R7-K9#sh controller cellular 0

Interface Cellular0
3G Modem-QuadBand HSPA+R7/HSPA/UMTS QuadBand EDGE/GPRS Global and GPS,
Cellular modem configuration:
----------------------------
GSM-Carrier Type  : Cellular GSM Global.
SKU (PRI) Value: 9900198    .

Modem is recognized as valid
manufacture id:  0x00001199     product id: 0x000068A3
Sierra Wireless Mini Card MC8705 HSPA+R7 modem.

Cellular Dual SIM details:
----------------------------

SIM 0 is present
SIM 0 is active SIM

Cellular Dual SIM register:

Dual SIM Control Register A
Dual SIM Interrupt Register 0
Dual SIM Mask Interrupt Register D2

Modem Management Statistics
----------------------------
Modem resets = 2
Last known modem state = 'application' mode
Packets sent = 207, Packets received = 33522, Packets pending = 0
```

```
DIP MDM link status retry count = 0 pdp context = 0
DIP MDM link up pending = 0 pdp context = 0
IDB Cellular0: DIP profile id = 255
RSSI LED[0-3]:    [OFF]    [OFF]   [OFF]   [OFF]
Service LED[0-3]: [YELLOW] [OFF]   [OFF]   [OFF]
SIM0 LED:         [GREEN]
SIM1 LED:         [OFF]
GPS LED:          [GREEN BLINKING]
GPS NMEA port = Disabled   (Stream OFF)
DM port = Disabled

Async HDLC Main Parameter (0xFF516680)
--------------------------------------
 INSTNUM=0x01 INSTMASK=0x20
 EXT1MSNUM=0xF8, EXT2MSNUM=0xF9, EXT3MSNUM=0x3C, EXT4MSNUM=0x3D
 INST1_BASE=0xFF5166C0, INST2_BASE=0xFF516780
 Microcode Revision=0x000000AC

Async HDLC Instance (0xFF5166C0) = 0
----------------------------------------
 RBASE=0x6828, TBASE=0x6C28, RBMR=0x30, TBMR=0x30, ZERO=0x00
 PLAIN_RBASE=0x6A28, AHDLC_TBASE=0x6D28
 PLRBPTR=0x6A28, AHTXBDPTR=0x6D28
 AEMODE=0x82, C_MASK=0x0000F0B8, C_PRES=0x0000FFFF
 TFTHR=0x0001, RFTHR=0x0001, MFLR=0x07F8
 TXCTL_TBL=0x00000000, RXCTL_TBL=0x00000000 ZERO1=0x0101
 RFCNT=0x0000, RSTATE=0x30042000, RXRPTR=0x00000000
 RBPTR=0x6828, RXRCNT=0x0000, RXWPTR=0x00000000
 RXWCNT=0x0000, RXWTOT=0x0000, RCRC=0x0000FFFF
 RXPROCNT=0x0000, RXRDAT1=0x00000000, RXRDAT2=0x00000000, RXWDAT1=0x00000000,
RXWDAT2=0x00000000
 TFCNT=0x0000, TSTATE=0x30004000, TXRPTR=0x00000000
 TBPTR=0x6C28, TXRCNT=0x0000, TXWPTR=0x00000000
 TXWCNT=0x0000, TXWTOT=0x0000, TCRC=0x0000FFFF
 TDCNT=0x0000,  RXRDPTR=0x66FF
 RXREM=0x00, RXWDATN0=0x00000000 RXWDATN1=0x00000000
 TXTEMP=0x00, TXWDAT0=0x00000000, TXWDAT1=0x00000000
 CEEXM1=0x01FF, CEEXM2=0x01FF, CEEXM3=0x0000, CEEXM4=0x0000
 CEEXE1=0x0000, CEEXE2=0x0000, CEEXE3=0x0000, CEEXE4=0x0000
 CIMR=0x80102000, CIPNR=0x00000000
 CRIMR=0x00C00000, CRIPNR=0x00000000
 CECDR=0x00800000  CERCR=0x08000000  CECCR=0x80000000

Async HDLC Instance (0xFF516780) = 1
----------------------------------------
 RBASE=0x6E28, TBASE=0x7228, RBMR=0x30, TBMR=0x30, ZERO=0x01
 PLAIN_RBASE=0x7028, AHDLC_TBASE=0x7428
 PLRBPTR=0x7208, AHTXBDPTR=0x7548
 AEMODE=0x82, C_MASK=0x0000F0B8, C_PRES=0x0000FFFF
 TFTHR=0x0001, RFTHR=0x0001, MFLR=0x07F8
 TXCTL_TBL=0x00000000, RXCTL_TBL=0x00000000 ZERO1=0x0101
 RFCNT=0x0000, RSTATE=0x30042000, RXRPTR=0x0F3CB328
 RBPTR=0x6FC8, RXRCNT=0x0000, RXWPTR=0x0F3D5BC0
 RXWCNT=0x0000, RXWTOT=0x000E, RCRC=0x0000FFFF
 RXPROCNT=0x0000, RXRDAT1=0x00000000, RXRDAT2=0x0000007E, RXWDAT1=0x000A6B37,
RXWDAT2=0x00000700
 TFCNT=0x0000, TSTATE=0x30004000, TXRPTR=0x0F3BA018
 TBPTR=0x7348, TXRCNT=0x0000, TXWPTR=0x0F3AEE98
 TXWCNT=0x0001, TXWTOT=0x0000, TCRC=0x0000FFFF
 TDCNT=0x0006,  RXRDPTR=0x67BF
 RXREM=0x00, RXWDATN0=0x00000000 RXWDATN1=0x00000001
 TXTEMP=0x00, TXWDAT0=0x03E80000, TXWDAT1=0x000503E8
 CEEXM1=0x01FF, CEEXM2=0x01FF, CEEXM3=0x0000, CEEXM4=0x0000
 CEEXE1=0x0000, CEEXE2=0x0000, CEEXE3=0x0000, CEEXE4=0x0000
```

```
 CIMR=0x80102000, CIPNR=0x00000000
 CRIMR=0x00C00000, CRIPNR=0x00000000
 CECDR=0x00800000  CERCR=0x08000000  CECCR=0x80000000
idb at 0x86A8FB78, driver data structure at 0x86A923F0
0 input aborts on receiving flag sequence
0 throttles, 0 enables
0 overruns, 0 CRC errors
0 resource errors, 0 incomp frame errors
0 input drops
0 transmitter underruns
0 tx_abort 0 tx_reset
Framer Mode: AT

dma channel = 0

# of resets for this channel = 0
Receive Ring
rx ring entries=64, tx ring entries=32
rxr head (0)(0xFF516828), rxr tail (4)(0xFF516848)
rx bulk complete = 4
rx bulk started = 5
rx bulk cancelled = 0
Plain Receive Ring
plain rx ring entries=64, tx ring entries=32
plain rxr head (0)(0xFF516A28), plain rxr tail (0)(0xFF516A28)
Transmit Ring
txr head (0)(0xFF516C28), txr tail (0)(0xFF516C28)
tx count (0), tx mci_txcount (2)
tx limited(0)
tx null packets processed by USB = 0
tx null to process by USB = 0
tx bulk complete = 2
tx bulk started = 2
tx bulk cancelled = 0
USB tx throttle = 0
USB tx unthrottle count = 2
USB tx shadow pak free Q depth 0
AHDLC Transmit Ring
ahdlc txr head (2)(0xFF516D38), ahdlc txr tail (0)(0xFF516D28)

dma channel = 1

# of resets for this channel = 0
Receive Ring
rx ring entries=64, tx ring entries=64
rxr head (52)(0xFF516FC8), rxr tail (52)(0xFF516FC8)
rx bulk complete = 820
rx bulk started = 821
rx bulk cancelled = 0
throttle flag = 0,  throttle val  = (0x00000000)
rx outstanding count  = 0
33529 packet inputs
0 input aborts on receiving flag sequence
0 throttles
0 overruns, 0 CRC errors
0 input drops
0 input errors
414 packet outputs
0 transmitter underruns
0 transmitter output drops
Plain Receive Ring
plain rx ring entries=64, tx ring entries=64
plain rxr head (60)(0xFF517208), plain rxr tail (60)(0xFF517208)
Transmit Ring
```

```
txr head (36)(0xFF517348), txr tail (36)(0xFF517348)
tx count (0), tx mci_txcount (2)
tx limited(0)
tx null packets processed by USB = 0
tx null to process by USB = 0
tx bulk complete = 100
tx bulk started = 100
tx bulk cancelled = 0
USB tx throttle = 0
USB tx unthrottle count = 100
USB tx shadow pak free Q depth 0
AHDLC Transmit Ring
ahdlc txr head (36)(0xFF517548), ahdlc txr tail (0)(0xFF517428)

dma channel = 3

# of resets for this channel = 0
Receive Ring
rx ring entries=64, tx ring entries=32
rxr head (0)(0x00000000), rxr tail (1)(0x00000008)
rx bulk complete = 129
rx bulk started = 130
rx bulk cancelled = 0
0 packet inputs
0 input aborts on receiving flag sequence
0 throttles
0 overruns, 0 CRC errors
0 input drops
0 input errors
0 packet outputs
0 transmitter underruns
0 transmitter output drops
Plain Receive Ring
plain rx ring entries=64, tx ring entries=32
plain rxr head (0)(0x00000000), plain rxr tail (0)(0x00000000)
Transmit Ring
txr head (0)(0x00000000), txr tail (0)(0x00000000)
tx count (0), tx mci_txcount (2)
tx limited(0)
tx null packets processed by USB = 0
tx null to process by USB = 0
tx bulk complete = 969
tx bulk started = 969
tx bulk cancelled = 0
USB tx throttle = 0
USB tx unthrottle count = 969
USB tx shadow pak free Q depth 0
AHDLC Transmit Ring
ahdlc txr head (9)(0x00000048), ahdlc txr tail (0)(0x00000000)

C881G+R7-K9#show run interface cellular 0
Building configuration...

Current configuration : 302 bytes
!
interface Cellular0
 ip address negotiated
 ip nat outside
 ip virtual-reassembly in
 encapsulation slip
 load-interval 30
 dialer in-band
 dialer idle-timeout 0
 dialer enable-timeout 6
```

```
 dialer string hspa-R7
 dialer-group 1
 no peer default ip address
 async mode interactive
 routing dynamic
end
```

Related Commands

Command	Description
cellular gsm sms delete	Deletes SMS messages on the GSM band.
cellular gsm sms send	Sends outgoing SMS messages on the GSM band.
cellular gsm sms view	Displays all incoming messages stored on the SIM card.

show controllers cellular

To display EHWIC hardware and driver-specific information, use the **show controllers cellular** command in privilege EXEC mode.

show controllers cellular *unit*

Syntax Description

unit	(EHWIC) Router slot, WIC slot, and port separated by slashes (for example, 0/1/0). (Fixed platform) The number 0.

Command Modes

Privilege EXEC (#)

Command History

Release	Modification
12.4(11)XV	This command was introduced.
12.4(15)T	This command was integrated into Cisco IOS Release 12.4(15)T.

Usage Guidelines

Use this command to capture the output for debugging or troubleshooting purposes only.

Related Commands

Command	Description
show interfaces cellular	Displays statistics for the cellular interfaces.
show run interface cellular	Displays the current running configuration for the cellular interface.

show interfaces cellular

To display statistics for the cellular interface, use the **show interfaces cellular** command in privileged EXEC mode.

show interfaces cellular *unit*

Syntax Description

unit	(EHWIC) Router slot, WIC slot, and port separated by slashes (for example, 0/1/0). (Fixed platform) The number 0.

Command Modes

Privileged EXEC (#)

Command History

Release	Modification
12.4(11)XV	This command was introduced.
12.4(15)T	This command was integrated into Cisco IOS Release 12.4(15)T.

Usage Guidelines

When you enter this command, encapsulation should be PPP and all signals, such as DCD, DSR, DTR, RTS, and CTS, should be up during normal operation.

Examples

The following example shows the cellular interface statistics in slot 0, WIC slot 1, and port 0:

```
router# show interfaces cellular 0/1/0
Cellular0/1/0 is up, line protocol is up
  Hardware is QuadBand HSPA/UMTS QuadBand EDGE/GPRS and GPS
  Internet address is 32.177.246.124/32
  MTU 1500 bytes, BW 5760 Kbit/sec, DLY 100000 usec,
     reliability 255/255, txload 1/255, rxload 1/255
  Encapsulation PPP, LCP Open
  Open: IPCP, loopback not set
  Keepalive not supported
  Last input 00:10:29, output 00:10:13, output hang never
  Last clearing of "show interface" counters never
  Input queue: 1/75/0/0 (size/max/drops/flushes); Total output drops: 0
  Queueing strategy: weighted fair
  Output queue: 0/1000/64/0 (size/max total/threshold/drops)
     Conversations  0/1/16 (active/max active/max total)
     Reserved Conversations 0/0 (allocated/max allocated)
     Available Bandwidth 4320 kilobits/sec
  30 second input rate 0 bits/sec, 0 packets/sec
  30 second output rate 0 bits/sec, 0 packets/sec
     11 packets input, 186 bytes, 0 no buffer
     Received 0 broadcasts (0 IP multicasts)
     0 runts, 0 giants, 0 throttles
     0 input errors, 0 CRC, 0 frame, 0 overrun, 0 ignored, 0 abort
     15 packets output, 500 bytes, 0 underruns
```

```
0 output errors, 0 collisions, 1 interface resets
0 unknown protocol drops
0 output buffer failures, 0 output buffers swapped out
0 carrier transitions
DCD=up  DSR=up  DTR=up  RTS=up  CTS=up
```

Related Commands

Command	Description
show controllers cellular	Displays EHWIC hardware and driver-specific information.
show run interface cellular	Displays the current running configuration for the cellular interface.

show run interface cellular

To see the current running configuration for the cellular interface, use the **show run interface cellular** command in privileged EXEC mode.

show run interface cellular *unit*

Syntax Description

unit	(EHWIC) Router slot, WIC slot, and port separated by slashes (for example, 0/1/0). (Fixed platform) The number 0.

Command Modes

Privileged EXEC (#)

Command History

Release	Modification
12.4(11)XV	This command was introduced.
12.4(15)T	This command was integrated into Cisco IOS Release 12.4(15)T.

Examples

The following example shows the output of the **show run interface cellular** command:

```
router# show running-config interface cellular 0/0/0
interface Cellular0/0/0
 ip address negotiated
 ip access-group 10 out
 ip nat outside
 ip virtual-reassembly
 encapsulation ppp
 no ip mroute-cache
 load-interval 30
 dialer in-band
 dialer idle-timeout 2147483
 dialer string gsm
 dialer-group 2
 async mode interactive
 no peer default ip address
 fair-queue
 ppp ipcp dns request
 routing dynamic
end router#
```

Related Commands

Command	Description
show controllers cellular	Displays EHWIC hardware and driver-specific information.
show interfaces cellular	Displays statistics for the cellular interfaces.

Troubleshooting

This section provides the necessary background information and resources available for troubleshooting the Cisco 3G EHWIC.

Verifying Data Call Setup

To verify the data call setup, perform the following steps:

Step 1 After you create a modem data profile using the **cellular profile create** command and configuring DDR on the cellular interface, send a ping from the router to a host across the wireless network.

Step 2 If the ping fails, debug the failure using the following debug and show commands:

- **debug chat**
- **debug dialer**
- **debug ppp negotiation**
- **show cellular all**
- **show controller cellular**
- **show interface cellular**
- **show running-config**
- **show ip route**

Step 3 Save the output from these commands and contact your system administrator.

Checking Signal Strength

If the Received Signal Strength Indication (RSSI) level is very low (for example, if it is less than -110 dBm) follow these steps:

Step 1 Check the antenna connection. Make sure the TNC connector is correctly threaded and tightened.

Step 2 If you are using a remote antenna, move the antenna cradle and check if the RSSI has improved.

Step 3 Contact your wireless service provider to verify if there is service availability in your area.

Verifying Service Availability

The following is a sample output for the **show cellular all** command for a scenario where the antenna is disconnected and a modem data profile has not been created. The errors in this case have been highlighted with >>>>>>>.

```
3825_gsm_3# show cellular 0/3/0 all
Load for five secs: 0%/0%; one minute: 0%; five minutes: 1%
Time source is hardware calendar, 19:40:43.239 UTC Wed Nov 8 2006

Hardware Information
====================
Modem Firmware Version = H1_0_0_7MCAP G:/WS/
Modem Firmware built = 10/26/06
Hardware Version = 1.0
International Mobile Subscriber Identity (IMSI) = <specific sim number>
International Mobile Equipment Identity (IMEI) = <specific modem number>
Factory Serial Number (FSN) = X2819460388100D
Modem Status = Online
Current Modem Temperature = 38 deg C, State = Normal

Profile Information
====================
 * - Default profile >>>>>>>> no profile here.

Data Connection Information
===========================

Profile 1, Packet Session Status = INACTIVE
        Inactivity Reason = Normal inactivate state
Profile 2, Packet Session Status = INACTIVE
        Inactivity Reason = Normal inactivate state
Profile 3, Packet Session Status = INACTIVE
        Inactivity Reason = Normal inactivate state
Profile 4, Packet Session Status = INACTIVE
        Inactivity Reason = Normal inactivate state
Profile 5, Packet Session Status = INACTIVE
        Inactivity Reason = Normal inactivate state
Profile 6, Packet Session Status = INACTIVE
        Inactivity Reason = Normal inactivate state
Profile 7, Packet Session Status = INACTIVE
        Inactivity Reason = Normal inactivate state
Profile 8, Packet Session Status = INACTIVE
        Inactivity Reason = Normal inactivate state
Profile 9, Packet Session Status = INACTIVE
        Inactivity Reason = Normal inactivate state
Profile 10, Packet Session Status = INACTIVE
        Inactivity Reason = Normal inactivate state
Profile 11, Packet Session Status = INACTIVE
        Inactivity Reason = Normal inactivate state
Profile 12, Packet Session Status = INACTIVE
        Inactivity Reason = Normal inactivate state
Profile 13, Packet Session Status = INACTIVE
        Inactivity Reason = Normal inactivate state
Profile 14, Packet Session Status = INACTIVE
        Inactivity Reason = Normal inactivate state
Profile 15, Packet Session Status = INACTIVE
        Inactivity Reason = Normal inactivate state
Profile 16, Packet Session Status = INACTIVE
        Inactivity Reason = Normal inactivate state


Network Information
```

```
===================
Current Service Status = No service, Service Error = None    >>>>>>> no service means not
connected to the network.
Current Service = Combined
Packet Service = None
Packet Session Status = Inactive
Current Roaming Status = Home
Network Selection Mode = Automatic
Country = USA, Network = Cinglr
Mobile Country Code (MCC) = 310
Mobile Network Code (MNC) = 380
Location Area Code (LAC) = 6042
Routing Area Code (RAC) = 255
Cell ID = 0
Primary Scrambling Code = 0
PLMN Selection = Automatic

Radio Information
=================
Current Band = None, Channel Number = 0
Current RSSI = -110 dBm        >>>>>>> either no antenna, or bad antenna or out of
network.

Modem Security Information
==========================
Card Holder Verification (CHV1) = Disabled
SIM Status = OK
SIM User Operation Required = None
Number of Retries remaining = 3
```

Successful Call Setup

The following is a sample output for when a call is set up using a CHAT script. It shows a received IP address from the network. Call setup is successful and the data path is open.

To troubleshoot the call setup, enable these debug commands:

- **debug modem**
- **debug chat**
- **debug ppp negotiation**
- **debug ppp event**
- **debug ppp error**

```
3825_gsm_3#
Nov  8 20:04:42.295: CHAT0/3/0: Attempting async line dialer script
Nov  8 20:04:42.295: CHAT0/3/0: Dialing using Modem script: <carrier> & System script:
none
Nov  8 20:04:42.299: CHAT0/3/0: process started
Nov  8 20:04:42.299: CHAT0/3/0: Asserting DTR
Nov  8 20:04:42.299: CHAT0/3/0: Chat script <carrier> started        >>>>> chat script
invoked
Nov  8 20:04:42.299: CHAT0/3/0: Sending string: atdt*98*1#
Nov  8 20:04:42.299: CHAT0/3/0: Expecting string: CONNECT
Nov  8 20:04:42.343: CHAT0/3/0: Completed match for expect: CONNECT
Nov  8 20:04:42.343: CHAT0/3/0: Chat script <carrier> finished, status = Success  >>>>
successful communication with modem
Nov  8 20:04:42.395: TTY0/3/0: no timer type 1 to destroy
Nov  8 20:04:42.395: TTY0/3/0: no timer type 0 to destroy
```

```
Nov  8 20:04:42.395: TTY0/3/0: no timer type 2 to destroy
Nov  8 20:04:44.395: %LINK-3-UPDOWN: Interface Cellular0/3/0, changed state to up
Nov  8 20:04:44.395: Ce0/3/0 PPP: Using dialer call direction
Nov  8 20:04:44.395: Ce0/3/0 PPP: Treating connection as a callout
Nov  8 20:04:44.395: Ce0/3/0 PPP: Session handle[7E000089] Session id[46]
Nov  8 20:04:44.395: Ce0/3/0 PPP: Phase is ESTABLISHING, Active Open
Nov  8 20:04:44.395: Ce0/3/0 PPP: No remote authentication for call-out
Nov  8 20:04:44.395: Ce0/3/0 LCP: O CONFREQ [Closed] id 75 len 16
Nov  8 20:04:44.395: Ce0/3/0 LCP:    ACCM 0x000A0000 (0x0206000A0000)
Nov  8 20:04:44.395: Ce0/3/0 LCP:    MagicNumber 0x179E8E46 (0x0506179E8E46)
Nov  8 20:04:44.395: Ce0/3/0 LCP: I CONFREQ [REQsent] id 83 len 25
Nov  8 20:04:44.395: Ce0/3/0 LCP:    ACCM 0x00000000 (0x020600000000)
Nov  8 20:04:44.395: Ce0/3/0 LCP:    AuthProto CHAP (0x0305C22305)
Nov  8 20:04:44.395: Ce0/3/0 LCP:    MagicNumber 0x374C7C61 (0x0506374C7C61)
Nov  8 20:04:44.395: Ce0/3/0 LCP:    PFC (0x0702)
Nov  8 20:04:44.395: Ce0/3/0 LCP:    ACFC (0x0802)
Nov  8 20:04:44.395: Ce0/3/0 LCP: O CONFREJ [REQsent] id 83 len 8
Nov  8 20:04:44.395: Ce0/3/0 LCP:    PFC (0x0702)
Nov  8 20:04:44.395: Ce0/3/0 LCP:    ACFC (0x0802)
Nov  8 20:04:44.399: Ce0/3/0 LCP: I CONFACK [REQsent] id 75 len 16
Nov  8 20:04:44.399: Ce0/3/0 LCP:    ACCM 0x000A0000 (0x0206000A0000)
Nov  8 20:04:44.399: Ce0/3/0 LCP:    MagicNumber 0x179E8E46 (0x0506179E8E46)
Nov  8 20:04:44.399: Ce0/3/0 LCP: I CONFREQ [ACKrcvd] id 84 len 21
Nov  8 20:04:44.399: Ce0/3/0 LCP:    ACCM 0x00000000 (0x020600000000)
Nov  8 20:04:44.399: Ce0/3/0 LCP:    AuthProto CHAP (0x0305C22305)
Nov  8 20:04:44.399: Ce0/3/0 LCP:    MagicNumber 0x374C7C61 (0x0506374C7C61)
Nov  8 20:04:44.399: Ce0/3/0 LCP: O CONFACK [ACKrcvd] id 84 len 21
Nov  8 20:04:44.399: Ce0/3/0 LCP:    ACCM 0x00000000 (0x020600000000)
Nov  8 20:04:44.399: Ce0/3/0 LCP:    AuthProto CHAP (0x0305C22305)
Nov  8 20:04:44.399: Ce0/3/0 LCP:    MagicNumber 0x374C7C61 (0x0506374C7C61)
Nov  8 20:04:44.399: Ce0/3/0 LCP: State is Open
Nov  8 20:04:44.399: Ce0/3/0 PPP: Phase is AUTHENTICATING, by the peer
Nov  8 20:04:44.403: Ce0/3/0 CHAP: I CHALLENGE id 1 len 35 from "UMTS_CHAP_SRVR"
Nov  8 20:04:44.403: Ce0/3/0 CHAP: Using hostname from interface CHAP
Nov  8 20:04:44.403: Ce0/3/0 CHAP: Using password from interface CHAP
Nov  8 20:04:44.403: Ce0/3/0 CHAP: O RESPONSE id 1 len 40 from "<username configured on
the cellular interface>"
Nov  8 20:04:44.407: Ce0/3/0 CHAP: I SUCCESS id 1 len 4
Nov  8 20:04:44.407: Ce0/3/0 PPP: Phase is FORWARDING, Attempting Forward
Nov  8 20:04:44.407: Ce0/3/0 PPP: Phase is ESTABLISHING, Finish LCP
Nov  8 20:04:44.407: Ce0/3/0 PPP: Phase is UP

>>>>> pap/chap succeeded

Nov  8 20:04:44.407: Ce0/3/0 IPCP: O CONFREQ [Closed] id 1 len 22
Nov  8 20:04:44.407: Ce0/3/0 IPCP:    Address 0.0.0.0 (0x030600000000)
Nov  8 20:04:44.407: Ce0/3/0 IPCP:    PrimaryDNS 0.0.0.0 (0x810600000000)
Nov  8 20:04:44.407: Ce0/3/0 IPCP:    SecondaryDNS 0.0.0.0 (0x830600000000)
Nov  8 20:04:44.407: Ce0/3/0 PPP: Process pending ncp packets
Nov  8 20:04:45.411: Ce0/3/0 IPCP: I CONFNAK [REQsent] id 1 len 16
Nov  8 20:04:45.411: Ce0/3/0 IPCP:    PrimaryDNS 10.11.12.13 (0x81060A0B0C0D)
Nov  8 20:04:45.411: Ce0/3/0 IPCP:    SecondaryDNS 10.11.12.14 (0x83060A0B0C0E)
Nov  8 20:04:45.411: Ce0/3/0 IPCP: O CONFREQ [REQsent] id 2 len 22
Nov  8 20:04:45.411: Ce0/3/0 IPCP:    Address 0.0.0.0 (0x030600000000)
Nov  8 20:04:45.411: Ce0/3/0 IPCP:    PrimaryDNS 10.11.12.13 (0x81060A0B0C0D)
Nov  8 20:04:45.411: Ce0/3/0 IPCP:    SecondaryDNS 10.11.12.14 (0x83060A0B0C0E)
Nov  8 20:04:45.459: Ce0/3/0 IPCP: I CONFREQ [REQsent] id 25 len 4
Nov  8 20:04:45.459: Ce0/3/0 IPCP: O CONFACK [REQsent] id 25 len 4
Nov  8 20:04:45.459: Ce0/3/0 IPCP: I CONFNAK [ACKsent] id 2 len 22
Nov  8 20:04:45.459: Ce0/3/0 IPCP:    Address 166.138.186.119 (0x0306A68ABA77)
Nov  8 20:04:45.459: Ce0/3/0 IPCP:    PrimaryDNS 66.102.163.231 (0x81064266A3E7)
Nov  8 20:04:45.459: Ce0/3/0 IPCP:    SecondaryDNS 66.102.163.232 (0x83064266A3E8)
Nov  8 20:04:45.459: Ce0/3/0 IPCP: O CONFREQ [ACKsent] id 3 len 22
Nov  8 20:04:45.459: Ce0/3/0 IPCP:    Address 166.138.186.119 (0x0306A68ABA77)
```

```
Nov  8 20:04:45.459: Ce0/3/0 IPCP:    PrimaryDNS 66.102.163.231 (0x81064266A3E7)
Nov  8 20:04:45.459: Ce0/3/0 IPCP:    SecondaryDNS 66.102.163.232 (0x83064266A3E8)
Nov  8 20:04:45.463: Ce0/3/0 IPCP: I CONFACK [ACKsent] id 3 len 22
Nov  8 20:04:45.463: Ce0/3/0 IPCP:    Address 166.138.186.119 (0x0306A68ABA77)
Nov  8 20:04:45.463: Ce0/3/0 IPCP:    PrimaryDNS 66.102.163.231 (0x81064266A3E7)
Nov  8 20:04:45.463: Ce0/3/0 IPCP:    SecondaryDNS 66.102.163.232 (0x83064266A3E8)
Nov  8 20:04:45.463: Ce0/3/0 IPCP: State is Open
Nov  8 20:04:45.463: Ce0/3/0 IPCP: Install negotiated IP interface address 166.138.186.119
```

Modem Troubleshooting Using the Diagnostic Port

The RJ-45 port on the faceplate of the 3G EHWIC provides access to the debug port on the Sierra Wireless modem. By connecting an industry-standard diagnostic tool like Qualcomm CAIT/QXDM or Spirent UDM to this port, you can perform radio-level diagnostics and traffic monitoring on the modem.

Use the following test commands to enable/disable the DM port:

router# **test cell-hwic 0/1/0 dm-port local** {**on** | **off** | **speed**}

router# **test cell-hwic 0/1/0 dm-port remote** {**on** | **off**}

For example, to enable the DM port, use one of these commands:

router# **test cell-hwic 0/1/0 dm-port local on**

router# **test cell-hwic 0/1/0 dm-port remote on**

The cable used to connect the PC/laptop running the diagnostic tool is the standard Cisco router console cable (RJ-45 to DB-9).

Note To enable test commands, you must enter the **service internal** command in global configuration mode.

Additional References

Related Documents

Related Topic	Document Title
Cisco 880 Series Integrated Service Router configuration	• *Configuring Cisco EHWIC and 880G for 3G (EV-DO Rev A)* • *Cisco 880 Series Integrated Services Router Software Configuration Guide*
Cisco 800 Series Integrated Service Router installation	• *Cisco 860 Series, Cisco 880 Series, and Cisco 890 Series Integrated Services Routers Hardware Installation Guide*
Release notes	• *Release Notes for Cisco EHWIC and 880G for 3G (EVDO Rev A)* • *Release Notes for EHWIC and 880G for 3.7G(HSPA+)/3.5G(HSPA)*

Standards

Standard	Title
IEEE 802.11n-2009	*IEEE Standard for Information Technology-—Local and metropolitan area networks-- Specific requirements—Part 11: Wireless LAN Medium Access Control (MAC) and Physical Layer (PHY) Specifications— Ammendment 5: Enhancements for Higher Throughput*

MIBs

MIB	MIBs Link
• CISCO-ENTITY-VENDORTYPE-OID-MIB • CISCO-PRODUCTS-MIB • 3G WWAN MIB = CISCO-WAN-3G-MIB • OLD-CISCO-CHASSIS-MIB	To locate and download MIBs for selected platforms, Cisco software releases, and feature sets, use Cisco MIB Locator found at the following URL: http://www.cisco.com/go/mibs

RFCs

RFC	Title
No new or modified RFCs are supported, and support for existing RFCs has not been modified.	—

Technical Assistance

Description	Link
The Cisco Support and Documentation website provides online resources to download documentation, software, and tools. Use these resources to install and configure the software and to troubleshoot and resolve technical issues with Cisco products and technologies. Access to most tools on the Cisco Support and Documentation website requires a Cisco.com user ID and password.	http://www.cisco.com/cisco/web/support/index.html

Cisco and the Cisco logo are trademarks or registered trademarks of Cisco and/or its affiliates in the U.S. and other countries. To view a list of Cisco trademarks, go to this URL: www.cisco.com/go/trademarks. Third-party trademarks mentioned are the property of their respective owners. The use of the word partner does not imply a partnership relationship between Cisco and any other company. (1110R)

Any Internet Protocol (IP) addresses and phone numbers used in this document are not intended to be actual addresses and phone numbers. Any examples, command display output, network topology diagrams, and other figures included in the document are shown for illustrative purposes only. Any use of actual IP addresses or phone numbers in illustrative content is unintentional and coincidental.

© 2011-2012 Cisco Systems, Inc. All rights reserved.