Cisco 4G LTE Software Configuration Guide

First Published: 2012-03-16

Last Modified: 2017-12-22

Cisco 4G LTE Software Configuration

This document provides an overview of the software features and configuration information for Cisco Fourth-Generation (4G) Long-Term Evolution (LTE) Wireless WAN (WWAN) Enhanced High-Speed WAN Interface Cards (EHWIC-4G-LTEs), Cisco 819 Series 4G LTE ISRs, Cisco C880 Series 4G LTE ISRs and Cisco C890 Series 4G LTE ISRs. Cisco EHWIC-4G-LTEs are single-wide 4G Wireless WAN (WWAN) EHWICs supported on Cisco Integrated Services Router Generation 2 (ISR G2). For Cisco EHWIC-4G-LTE SKUs, faceplate, and LED descriptions, see the Cisco 4G LTE Hardware Installation Guide.

Finding Feature Information

Your software release may not support all the features documented in this module. For the latest caveats and feature information, see Bug Search Tool and the release notes for your platform and software release. To find information about the features documented in this module, and to see a list of the releases in which each feature is supported, see the feature information table.

Use Cisco Feature Navigator to find information about platform support and Cisco software image support. To access Cisco Feature Navigator, go to www.cisco.com/go/cfn. An account on Cisco.com is not required.

Prerequisites for Configuring Cisco 4G LTE

- You must have 4G LTE network coverage where your router is physically placed. For a complete list of supported carriers, see the product data sheet.
- You must subscribe to a service plan with a wireless service provider and obtain a Subscriber Identity Module (SIM) card.
- You must install the SIM card before configuring the 4G LTE Wireless WAN EHWIC or Cisco 819 router.
- The standalone antenna that supports GPS capabilities must be installed for the GPS feature to work. See the Cisco 4G Indoor/Outdoor Active GPS Antenna (GPS-ACT-ANTM-SMA) (http://www.cisco.com/en/US/docs/routers/access/wireless/hardware/notes/gps_ant.html) document for installation information.
- Both GPS and NMEA features must be configured for GPS coordinates to be obtained.

Restrictions for Configuring Cisco 4G LTE

Follow these restrictions and usage guideline while configuring Cisco 4G LTE:

- Currently, cellular networks support only user initiated bearer establishment.

- Due to the shared nature of wireless communications, the experienced throughput varies depending on the number of active users or congestion in a given network.
- Cellular networks have higher latency compared to wired networks. Latency rates depend on the technology and carrier. Latency may be higher because of network congestion. Latency also depends on the signal conditions and can be higher because of network congestion.
- Any restrictions that are part of the terms of service from your carrier.
- SMS—Only one text message up to 160 characters to one recipient at a time is supported. Larger texts are automatically truncated to the proper size before being sent.
- For the router that runs the SNMP agent, you must configure appropriate access control (for example, SNMP-server community) using the Cisco IOS CLI for the NMS and agent to work properly.
- It is strongly recommended that you configure SNMP V3 with authentication/privacy when implementing SNMP SET operation.

Information about Configuring Cisco 4G LTE

Overview of Cisco 4G LTE

Cisco EHWIC-4G-LTEs are single-wide Wireless WAN (WWAN) EHWICs supported on Cisco 1110 Series routers. Cisco EHWIC-4G-LTEs operate over Fourth-Generation Long-Term Evolution (4G LTE) cellular networks and Third-Generation (3G) cellular networks. The Cisco 4G LTE WWAN EHWIC offers a highly secure, simplified, and cost-effective WAN alternative to DSL or Frame Relay. In areas where terrestrial broadband services (cable, DSL, or T1) are not available or are expensive, 4G LTE WWAN connectivity can be a viable alternative. Using the integrated services available on the Cisco 1110 series routers, Cisco 4G LTE Wireless WAN EHWICs can provide instant and mobile communications during disasters and service outages.

Cisco 4G LTE EHWICs support the following 4G/3G modes:

- **4G LTE**—4G LTE mobile specification provides multi-megabit bandwidth, more efficient radio network, latency reduction, and improved mobility. LTE solutions target new cellular networks. These networks initially support up to 100 Mb/s peak rates in the downlink and up to 50 Mb/s peak rates in the uplink. The throughput of these networks is higher than the existing 3G networks
- **3G Evolution High-Speed Packet Access (HSPA/HSPA+)**—HSPA is a UMTS-based 3G network. It supports High-Speed Downlink Packet Access (HSDPA) and High-Speed Uplink Packet Access (HSUPA) data for improved download and upload speeds. Evolution High-Speed Packet Access (HSPA+) supports Multiple Input/Multiple Output (MIMO) antenna capability.
- **3G Evolution-Data Optimized (EVDO or DOrA) Mode**—EVDO is a 3G telecommunications standard for the wireless transmission of data through radio signals, typically for broadband Internet access. DOrA refers to EVDO Rev-A. EVDO uses multiplexing techniques including Code Division Multiple Access (CDMA), as well as Time Division Multiple Access (TDMA), to maximize both individual users' throughput and the overall system throughput.

The following table describes the Cisco 4G WWAN EHWIC product SKUs.

Table 1: Cisco 4G EHWICs by Mode, Operating Region, and Frequencies

Cisco 4G EHWIC	Description	Mode	Operating Regions	Frequency Band

EHWIC-4G-LTE-V	EHWIC-4G-LTE-V is a dedicated Multimode LTE SKU for Verizon Wireless networks and it is backwards compatible with these technologies:
	• Evolved High-Rate Packet Data (EHRPD)
	• Single Carrier Evolution Data Optimized (1x EVDO) Revision A
	• Single Carrier Radio Transmission Technology (1xRTT)
		• LTE
		• EVDO Revision A (DOrA)
			North America	• For LTE: 700 MHz (band 13)
				• For CDMA 1xRTT and 1xEVDO Revision A
				  • 800 MHz
				  • 1900 MHz

EHWIC-4G-LTE-A	EHWIC-4G-LTE-A is a dedicated Multimode LTE SKU for AT&T Wireless networks and it is backwards compatible with these technologies: • Universal Mobile Telecommunications System (UMTS) • High Speed Packet Access + (HSPA+) • HSPA • Global System for Mobile communications (GSM) • Exchanged Data rates for GSM Evolution (EDGE) • General Packet Radio Services (GPRS)	• LTE • HSPA+ • HSPA • UMTS • EDGE • GPRS	North America	For LTE: • 700 MHz (band 17) • AWS (band 4) • 2100 MHz (band 1) For UMTS, HSPA+ and HSPA: • 800 MHz • 850 MHz • 1900 MHz • 2100 MHz For GSM, EDGE and GPRS: • 850 MHz • 900 MHz • 1800 MHz • 1900 MHz

Cisco 4G EHWIC	Description	Mode	Operating Regions	Frequency Band
EHWIC-4G-LTE-G	EHWIC-4G-LTE-G is a dedicated Multimode LTE SKU for global wireless networks and it is backwards compatible with these technologies: • UMTS • HSPA+ • HSPA • GSM • EDGE • GPRS	• LTE • UMTS • HSPA+ • HSPA • EDGE • GPRS	Global	For LTE: • 800 MHz (band 20) • 900 MHz (band 8) • 1800 MHz (band 3) • 2100 MHz (band 1) • 2600 MHz (band 7) For UMTS/HSPA+/HSPA: • 900 MHz • 2100 MHz For GSM/EDGE/GPRS: • 900 MHz • 1800 MHz • 1900 MHz
EHWIC-4G-LTE-JP	EHWIC-4G-LTE-JP is a dedicated Multimode LTE SKU for NTT Docomo Japan, and is based on the Sierra Wireless MC7700 modem. EHWIC-4G-LTE-JP is backward compatible with these technologies: • UMTS • HSPA+	• LTE • UMTS • HSPA+	Japan	For LTE: 2100 MHz (band 1) For UMTS/HSPA+: • 2100 MHz (band 1) • 1900 MHz (band 2) • 850 MHz (band 5)
EHWIC-4G-LTE-BE	EHWIC-4G-LTE-BE is a dedicated Multimode LTE SKU for Canada, and is based on the Sierra Wireless MC7700 modem. EHWIC-4G-LTE-BE is backward compatible with these technologies: • UMTS • HSPA+	• LTE • UMTS • HSPA+	Canada	For LTE: AWS band 4 For UMTS/HSPA+: • 2100 MHz (band 1) • 1900 MHz (band 2) • 850 MHz (band 5)

Cisco 4G EHWIC	Description	Mode	Operating Regions	Frequency Band
EHWIC-4G-LTE-AU	EHWIC-4G-LTE-AU is a dedicated Multimode LTE SKU for wireless networks in Australia and New Zealand. EHWIC-4G-LTE-AU comes with a Sierra Wireless MC7304 modem.	• LTE • HSPA+ • HSPA • UMTS • EDGE • GPRS	Australia and New Zealand	For LTE: • 800 MHz (band 20) • 900 MHz (band 8) • 1800 MHz (band 3) • 2100 MHz (band 1) • 2600 MHz (band 7) For UMTS/HSPA+/HSPA: • 800 MHz (band 6) • 850 MHz (band 5) • 900 MHz (band 8) • 1900 MHz (band 2) • 2100 MHz (band 1) For GSM/EDGE/GPRS: • 850 MHz • 900 MHz • 1800 MHz • 1900 MHz
EHWIC-4G-LTE-ST	Dedicated Multimode LTE SKU for Sprint Wireless networks. This comes with a Sierra Wireless MC7350 modem.	• LTE • EVDO Rev-A • 1xRTT	North America (Sprint)	LTE: • AWS (band 4) • PCS 1900 MHz (band 25) 3G: • 800 MHz (band class 0) • 1900 MHz (band class 1) • 800 MHz (band class 10) 2G: • 800 MHz (band class 0) • 1900 MHz (band class 1) • 800 MHz (band class 10)

Cisco 4G EHWIC	Description	Mode	Operating Regions	Frequency Band
EHWIC-4G-LTE-VZ	Dedicated Multimode LTE SKU for Verizon Wireless networks. This comes with a Sierra Wireless MC7350 modem.	• LTE • EVDO Rev-A • 1xRTT	North America (Verizon)	LTE: • AWS (band 4) • 700 MHz (band 13) • PCS 1900 MHz (band 25) 3G: • 800 MHz (band class 0) • 1900 MHz (band class 1) • 800 MHz (band class 10) 2G: • 800 MHz (band class 0) • 1900 MHz (band class 1) • 800 MHz (band class 10)
EHWIC-4G-LTE-CA	Dedicated Multimode LTE SKU for Wireless networks in Canada. This comes with a Sierra Wireless MC7354 modem.	• LTE • HSPA • HSPA • UMTS • GSM • EDGE • GPRS	Canada	LTE: • AWS (band 4) • 700 MHz (band 5) • 850 MHz (band 17) • 1900 MHz (band 2) • 2600 MHz (band 7) 3G (UMTS, HSPA+, HSPA): • 1900 MHz (band 2) • AWS (band 4) • 850 (band 5) 2G (GSM, EDGE, GPRS): • 850 MHz • 900 MHz • 1800 MHz • 1900 MHz

Cisco 4G EHWIC	Description	Mode	Operating Regions	Frequency Band
EHWIC-4G-LTE-AT	Dedicated Multimode LTE SKU for AT & T Wireless networks. This comes with a Sierra Wireless MC7354 modem.	• LTE • HSPA • HSPA • UMTS • GSM • EDGE • GPRS	North America (AT&T)	LTE: • AWS (band 4) • 700 MHz (band 5) • 850 MHz (band 17) • 1900 MHz (band 2) • 2600 MHz (band 7) 3G (UMTS, HSPA+, HSPA): • 1900 MHz (band 2) • AWS (band 4) • 850 (band 5) 2G (GSM, EDGE, GPRS): • 850 MHz • 900 MHz • 1800 MHz • 1900 MHz
EHWIC-4G-LTE-GB	Dedicated Multimode LTE SKU for global Wireless networks. This comes with a Sierra Wireless MC7304 modem.	• LTE • HSPA+ • HSPA • UMTS • EDGE • GPRS	Global (except Australia and New Zealand)	For LTE: • 800 MHz (band 20) • 900 MHz (band 8) • 1800 MHz (band 3) • 2100 MHz (band 1) • 2600 MHz (band 7) For UMTS, HSPA+, HSPA: • 800 MHz (band 6) • 850 MHz (band 5) • 900 MHz (band 8) • 1900 MHz (band 2) • 2100 MHz (band 1) For GSM, EDGE, GPRS: • 850 MHz • 900 MHz • 1800 MHz • 1900 MHz

Cisco 4G EHWIC	Description	Mode	Operating Regions	Frequency Band
EHWIC-LTE-LA	Dedicated Multimode LTE SKU for Latin American Wireless networks. This comes with a Sierra Wireless MC7430 modem.	• LTE • HSPA+ • HSPA • UMTS	Latin America	For FDD LTE: • 700 MHz (band 28) • 850 MHz (band 5) • 800 MHz (band 19) • 800 MHz (band 18) • 900 MHz (band 8) • 1800 MHz (band 3) • 2100 MHz (band 1) • 2600 MHz (band 7) For TDD LTE: • 1900 MHz (Band 39) • 2300 MHz (Band 40) • 2500 MHz (Band 41) • 2600 MHz (Band 38) For UMTS, HSPA+, HSPA: • 800 MHz (band 6) • 800 MHz (band 19) • 850 MHz (band 5) • 900 MHz (band 8) • 1700 MHz (band 9) • 2100 MHz (band 1)

Cisco 4G EHWIC	Description	Mode	Operating Regions	Frequency Band
EHWIC-LTE-CI	Dedicated Multimode LTE SKU for Wireless networks in India and China. This comes with a Sierra Wireless MC7430 modem.	• LTE • HSPA+ • HSPA • UMTS	India and China	For FDD LTE: • 700 MHz (band 28) • 850 MHz (band 5) • 800 MHz (band 19) • 800 MHz (band 18) • 900 MHz (band 8) • 1800 MHz (band 3) • 2100 MHz (band 1) • 2600 MHz (band 7) For TDD LTE: • 1900 MHz (Band 39) • 2300 MHz (Band 40) • 2500 MHz (Band 41) • 2600 MHz (Band 38) For UMTS, HSPA+, HSPA: • 800 MHz (band 6) • 800 MHz (band 19) • 850 MHz (band 5) • 900 MHz (band 8) • 1700 MHz (band 9) • 2100 MHz (band 1)

Cisco 4G EHWIC	Description	Mode	Operating Regions	Frequency Band
EHWIC-LTE-JN	Dedicated Multimode LTE SKU for Wireless networks in Japan. This comes with a Sierra Wireless MC7430 modem.	• LTE • HSPA+ • HSPA • UMTS	Japan	For FDD LTE: • 700 MHz (band 28) • 850 MHz (band 5) • 800 MHz (band 19) • 800 MHz (band 18) • 900 MHz (band 8) • 1800 MHz (band 3) • 2100 MHz (band 1) • 2600 MHz (band 7) For TDD LTE: • 1900 MHz (Band 39) • 2300 MHz (Band 40) • 2500 MHz (Band 41) • 2600 MHz (Band 38) For UMTS, HSPA+, HSPA: • 800 MHz (band 6) • 800 MHz (band 19) • 850 MHz (band 5) • 900 MHz (band 8) • 1700 MHz (band 9) • 2100 MHz (band 1)

The following table lists the different 4G LTE SKUs available for the Cisco 1110 series routers:

Table 2: Supported 4G LTE SKUs for Cisco 1110 Series Routers

SKU ID	Description	Mode	Operating Regions	Frequency Band
C819HG-4G-V-K9	C819HG-4G-V-K9 is a dedicated Multimode LTE SKU for Verizon Wireless networks and comes with a Sierra Wireless MC7750 modem. C819HG-4G-V-K9 is a hardened Cisco 819 Series Router.	LTE—DOrA	North America	For LTE: 700 MHz (band 13) For CDMA 1xRTT, 1xEVDO Rev A: • 800 MHz • 1900 MHz

SKU ID	Description	Mode	Operating Regions	Frequency Band
C819G-4G-V-K9	C819G-4G-V-K9 is a dedicated Multimode LTE SKU for Verizon Wireless networks and comes with a Sierra Wireless MC7750 modem. C819G-4G-V-K9 is a non-hardened Cisco 819 Series Router.	LTE—DOrA	North America	For LTE: 700 MHz (band 13) For CDMA 1xRTT, 1xEVDO Rev A: • 800 MHz • 1900 MHz
C819HG-4G-A-K9	C819HG-4G-A-K9 is a dedicated Multimode LTE SKU for AT & T Wireless networks and comes with a Sierra Wireless MC7700 modem. C819HG-4G-A-K9 is a hardened Cisco 819 Series Router.	LTE—HSPA+/ HSPA/UMTS/ EDGE/GPRS	North America	For LTE: • 700 MHz (band 17) • AWS (band 4) • 2100MHz (band 1) For UMTS/HSPA+/HSPA: • 800 MHz • 850 MHz • 1900 MHz • 2100 MHz For GSM/EDGE/GPRS: • 850 MHz • 900 MHz • 1800 MHz • 1900 MHz
C819G-4G-A-K9	C819G-4G-A-K9 is a dedicated Multimode LTE SKU for AT&T Wireless networks and comes with a Sierra Wireless MC7700 modem. C819G-4G-A-K9 is a compact non-hardened Cisco 819 Series Router.	LTE—HSPA+/ HSPA/UMTS/ EDGE/GPRS	North America	For LTE: • 700 MHz (band 17) • AWS (band 4) • 2100MHz (band 1) For UMTS/HSPA+/HSPA: • 800 MHz • 850 MHz • 1900 MHz • 2100 MHz For GSM/EDGE/GPRS: • 850 MHz • 900 MHz • 1800 MHz • 1900 MHz

SKU ID	Description	Mode	Operating Regions	Frequency Band
C819HG-4G-G-K9	C819HG-4G-G-K9 is a dedicated Multimode LTE SKU for global wireless networks and comes with a Sierra Wireless MC7710 modem. C819HG-4G-G-K9 is a hardened Cisco 819 Series Router.	LTE—HSPA+/ HSPA/UMTS/ EDGE/GPRS	Global	For LTE: • 800 MHz (band 20) • 900 MHz (band 8) • 1800 MHz (band 3) • 2100MHz (band 1) • 2600 MHz (band 7) For UMTS/HSPA+/HSPA: • 900 MHz • 2100 MHz For GSM/EDGE/GPRS: • 900 MHz • 1800 MHz • 1900 MHz
C819G-4G-G-K9	C819G-4G-G-K9 is a dedicated Multimode LTE SKU for global wireless networks and comes with a Sierra Wireless MC7710 modem. C819G-4G-G-K9 is a non-hardened Cisco 819 Series Router.	LTE—HSPA+/ HSPA/UMTS/ EDGE/GPRS	Global	For LTE: • 800 MHz (band 20) • 900 MHz (band 8) • 1800 MHz (band 3) • 2100MHz (band 1) • 2600 MHz (band 7) For UMTS/HSPA+/HSPA: • 900 MHz • 2100 MHz For GSM/EDGE/GPRS: • 900 MHz • 1800 MHz • 1900 MHz

SKU ID	Description	Mode	Operating Regions	Frequency Band
C819G-4G-GA-K9	C819G-4G-GA-K9 is a dedicated Multimode LTE SKU for global wireless networks and comes with a Sierra Wireless MC7304 modem. C819G-4G-G-K9 is a non-hardened Cisco 819 Series Router.	LTE—HSPA+/ HSPA/UMTS/ EDGE/GPRS	Global (Europe, Australia and New Zealand)	For LTE: • 800 MHz (band 20) • 900 MHz (band 8) • 1800 MHz (band 3) • 2100MHz (band 1) • 2600 MHz (band 7) For UMTS/HSPA+/HSPA: • 800 MHz • 850 MHz • 1900 MHz • 2100 MHz For GSM/EDGE/GPRS: • 850 MHz • 900 MHz • 1800 MHz • 1900 MHz
C819G-4G-NA-K9	Non-hardened Cisco 819 router with multi-mode LTE feature for AT & T wireless networks. This comes with a Sierra Wireless MC7354 modem.	• LTE • HSPA+ • HSPA • UMTS • EDGE • GPRS	North America (AT&T, Bell-Canada, Roger, Telus, and other GSM/LTE operators in USA and Canada)	LTE: • AWS (band 4) • 700 MHz (band 5) • 850 MHz (band 17) • 1900 MHz (band 2) • 2600 MHz (band 7) UMTS, HSPA+, HSPA: • 1900 MHz (band 2) • AWS (band 4) • 850 (band 5) GSM, EDGE, GPRS: • 850 MHz • 900 MHz • 1800 MHz • 1900 MHz

SKU ID	Description	Mode	Operating Regions	Frequency Band
C819G-4G-ST-K9	Non-hardened Cisco 819 router with multi-mode LTE feature for Sprint wireless networks. This comes with a Sierra Wireless MC7350 modem.	• LTE • EVDO Rev-A • 1xRTT	North America (Sprint)	LTE: • AWS (band 4) • 700 MHz (band 13) • PCS 1900 MHz (band 25) 3G: • 800 MHz (band class 0) • 1900 MHz (band class 1) • 800 MHz (band class 10) 2G: • 800 MHz (band class 0) • 1900 MHz (band class 1) • 800 MHz (band class 10)
C819G-4G-VZ-K9	Non-hardened Cisco 819 router with multi-mode LTE feature for Verizon wireless networks. This comes with a Sierra Wireless MC7350 modem.	• LTE • EVDO Rev-A • 1xRTT	North America (Verizon)	LTE: • AWS (band 4) • 700 MHz (band 13) • PCS 1900 MHz (band 25) 3G: • 800 MHz (band class 0) • 1900 MHz (band class 1) • 800 MHz (band class 10) 2G: • 800 MHz (band class 0) • 1900 MHz (band class 1) • 800 MHz (band class 10)

SKU ID	Description	Mode	Operating Regions	Frequency Band
C819GW-LTE-MNA-AK9	C819GW-LTE-MNA-AK9 is a dedicated Multimode LTE SKU for North America wireless networks and comes with a Sierra Wireless MC7354MNA modem. C819GW-LTE-MNA-AK9 is a non-hardened Cisco 819 Series Router. For 3GPP complaint, the extended temperature range for this SKU is -15 to 50C. For non-3GPP complaint, it is -15 to 55C. Dual SIMs in this SKU provide high reliability and cellular multihoming support for LTE and HSPA-based networks using the common FW technology within the same region. Dual SIMs in the North American SKUs provide switchover with different FW technology. **Note** This is a 4G+ WIFI SKU. This SKU supports all North American carriers like Verizon, ATT, Sprint, and Canada using MC7354MNA modems.	• LTE • HSPA+ • EVDO Revision A (DOrA) • CDMA • EDGE/GPRS/GSM	North America	For LTE: • 700 MHz (Band 13) • 700 MHz (Band 17) • 800 MHz (Band 5) • 1900 MHz (Band 2) • 1900 MHz (Band 25) • AWS 1700/2100 MHz (Band 4) For HSPA+: • 850 MHz (Band 5) • 900 MHz (Band 8) • 1900 MHz (Band 2) • 2100 MHz (Band 1) • AWS 1700/2100 MHz (Band 4) For CDMA and EVDO Revision A: • 800 MHz (Band Class 0) • 1900 MHz (Band Class 1) • 800 MHz (Band Class 10) For EDGE/GPRS/GSM: • 850 MHz • 900 MHz • 1800 MHz • 1900 MHz

SKU ID	Description	Mode	Operating Regions	Frequency Band
C819GW-LTE-GA-EK9	C819GW-LTE-GA-EK9 is a dedicated Multimode LTE SKU for global wireless network and comes with a Sierra Wireless MC7304 modem. C819GW-LTE-GA-EK9 is a non-hardened Cisco 819 Series Router. For 3GPP complaint, the extended temperature range for this SKU is -15 to 50C. For non-3GPP complaint, it is -15 to 55C. Dual SIMs in this SKU provide high reliability and cellular multihoming support for LTE and HSPA-based networks using the common FW technology within the same region. Dual SIMs provide switchover with different FW technology. **Note** This is a 4G + WIFI SKU for Global and Australia market.	• LTE • HSPA+ • EDGE/GPRS/GSM	Global (Europe and Australia)	For LTE: • 800 MHz (Band 20) • 900 MHz (Band 8) • 1800 MHz (Band 3) • 2100 MHz (Band 1) • 2600 MHz (Band 7) For HSPA+: • 850 MHz (Band 5) • 900 MHz (Band 8) • 1900 MHz (Band 2) • 2100 MHz (Band 1) For EDGE/GPRS/GSM: • 850 MHz • 900 MHz • 1800 MHz • 1900 MHz

SKU ID	Description	Mode	Operating Regions	Frequency Band
C819G-LTE-MNA-K9	C819G-LTE-MNA-K9 is a dedicated Multimode LTE SKU for global wireless network and comes with a Sierra Wireless MC7354-MNA modem. C819G-LTE-MNA-K9 is a non-hardened Cisco 819 Series Router. For 3GPP complaint, the extended temperature range for this SKU is -15 to 50C. For non-3GPP complaint, it is -15 to 55C. Dual SIMs in this SKU provide high reliability and cellular multihoming support for LTE and HSPA-based networks using the common FW technology within the same region. Dual SIMs provide switchover with different FW technology. **Note** This SKU does not have a WiFi module.	• LTE • HSPA+ • EDGE GPRS GSM • CDMA • EVDO	Global (Europe and Australia)	LTE: • 850Mhz(band 19) • 1500Mhz(band 21) • 2100Mhz(band 1) 3G(UMTS,HSPA+,HSPA): • 800Mhz(band 6) • 850Mhz(band 5) • 850Mhz(band 19) • 2100Mhz(band 1) 2G(GSM,EDGE,GPRS): • 850Mhz • 900Mhz • 1800Mhz • 1900Mhz

SKU ID	Description	Mode	Operating Regions	Frequency Band
C819G-LTE-LA-K9	C819G-LTE-LA-K9 is a dedicated Multimode LTE SKU for Latin American wireless networks and comes with a Sierra Wireless MC7430 modem.	• LTE • HSPA+ • HSPA • UMTS	Latin America/APAC	For FDD LTE: • 700 MHz (band 28) • 850 MHz (band 5) • 800 MHz (band 19) • 800 MHz (band 18) • 900 MHz (band 8) • 1800 MHz (band 3) • 2100 MHz (band 1) • 2600 MHz (band 7) For TDD LTE: • 1900 MHz (Band 39) • 2300 MHz (Band 40) • 2500 MHz (Band 41) • 2600 MHz (Band 38) For UMTS, HSPA+, HSPA: • 800 MHz (band 6) • 800 MHz (band 19) • 850 MHz (band 5) • 900 MHz (band 8) • 1700 MHz (band 9) • 2100 MHz (band 1)

SKU ID	Description	Mode	Operating Regions	Frequency Band
C819GW-LTE-LA-CK9	C819G-LTE-LA-K9 is a dedicated Multimode LTE SKU for Latin American wireless networks and comes with a Sierra Wireless MC7430 modem.	• LTE • HSPA+ • HSPA • UMTS	Latin America/APAC	For FDD LTE: • 700 MHz (band 28) • 850 MHz (band 5) • 800 MHz (band 19) • 800 MHz (band 18) • 900 MHz (band 8) • 1800 MHz (band 3) • 2100 MHz (band 1) • 2600 MHz (band 7) For TDD LTE: • 1900 MHz (Band 39) • 2300 MHz (Band 40) • 2500 MHz (Band 41) • 2600 MHz (Band 38) For UMTS, HSPA+, HSPA: • 800 MHz (band 6) • 800 MHz (band 19) • 850 MHz (band 5) • 900 MHz (band 8) • 1700 MHz (band 9) • 2100 MHz (band 1)

SKU ID	Description	Mode	Operating Regions	Frequency Band
C819GW-LTE-LA-QK9	C819G-LTE-LA-QK9 is a dedicated Multimode LTE SKU for Latin American wireless networks and comes with a Sierra Wireless MC7430 modem.	• LTE • HSPA+ • HSPA • UMTS	Latin America/APAC	For FDD LTE: • 700 MHz (band 28) • 850 MHz (band 5) • 800 MHz (band 19) • 800 MHz (band 18) • 900 MHz (band 8) • 1800 MHz (band 3) • 2100 MHz (band 1) • 2600 MHz (band 7) For TDD LTE: • 1900 MHz (Band 39) • 2300 MHz (Band 40) • 2500 MHz (Band 41) • 2600 MHz (Band 38) For UMTS, HSPA+, HSPA: • 800 MHz (band 6) • 800 MHz (band 19) • 850 MHz (band 5) • 900 MHz (band 8) • 1700 MHz (band 9) • 2100 MHz (band 1)

SKU ID	Description	Mode	Operating Regions	Frequency Band
C819GW-LTE-LA-NK9	C819G-LTE-LA-NK9 is a dedicated Multimode LTE SKU for Latin American wireless networks and comes with a Sierra Wireless MC7430 modem.	• LTE • HSPA+ • HSPA • UMTS	Latin America/APAC	For FDD LTE: • 700 MHz (band 28) • 850 MHz (band 5) • 800 MHz (band 19) • 800 MHz (band 18) • 900 MHz (band 8) • 1800 MHz (band 3) • 2100 MHz (band 1) • 2600 MHz (band 7) For TDD LTE: • 1900 MHz (Band 39) • 2300 MHz (Band 40) • 2500 MHz (Band 41) • 2600 MHz (Band 38) For UMTS, HSPA+, HSPA: • 800 MHz (band 6) • 800 MHz (band 19) • 850 MHz (band 5) • 900 MHz (band 8) • 1700 MHz (band 9) • 2100 MHz (band 1)

The following table lists the different 4G LTE SKUs available for the Cisco 880 and Cisco 890 series ISRs.

Table 3: Supported 4G LTE SKUs for the Cisco 880 and Cisco 890 Series ISRs

SKU ID	Mode	Operating Region	Frequency Band	Description
C881G-4G-GA-K9	• LTE • HSPA+ • HSPA • UMTS • EDGE • GPRS	Global (Europe, New Zealand, and Australia)	LTE: • 800 MHz (band 20) • 900 MHz (band 8) • 1800 MHz (band 3) • 2100 MHz (band 1) • 2600 MHz (band 7) 3G (UMTS, HSPA+, HSPA): • 800 MHz (band 6) • 850 MHz (band 5) • 900 MHz (band 8) • 1900 MHz (band 2) • 2100 MHz (band 1) 2G (GSM, EDGE, GPRS): • 850 MHz • 900 MHz • 1800 MHz • 1900 MHz	Cisco 880 Series ISR with Multimode LTE feature for global wireless networks. C881G-4G-GA-K9 comes with a Sierra Wireless MC7304 modem.
C887VAG-4G-GA-K9	• LTE • HSPA+ • HSPA • UMTS • EDGE • GPRS	Global (Europe, New Zealand, and Australia)	LTE: • 800 MHz (band 20) • 900 MHz (band 8) • 1800 MHz (band 3) • 2100 MHz (band 1) • 2600 MHz (band 7) 3G (UMTS, HSPA+, HSPA): • 800 MHz (band 6) • 850 MHz (band 5) • 900 MHz (band 8) • 1900 MHz (band 2) • 2100 MHz (band 1) 2G (GSM, EDGE, GPRS): • 850 MHz • 900 MHz • 1800 MHz • 1900 MHz	Cisco 880 series ISR with Multimode LTE feature for global wireless networks. C887VAG-4G-GA-K9 comes with a Sierra Wireless MC7304 modem.

SKU ID	Mode	Operating Region	Frequency Band	Description
C896VAG-LTE-GA-K9	• LTE • HSPA+ • HSPA • UMTS • EDGE • GPRS	Global (Europe, New Zealand, and Australia)	LTE: • 800 MHz (band 20) • 900 MHz (band 8) • 1800 MHz (band 3) • 2100 MHz (band 1) • 2600 MHz (band 7) 3G (UMTS, HSPA+, HSPA): • 800 MHz (band 6) • 850 MHz (band 5) • 900 MHz (band 8) • 1900 MHz (band 2) • 2100 MHz (band 1) 2G (GSM, EDGE, GPRS): • 850 MHz • 900 MHz • 1800 MHz • 1900 MHz	Cisco 890 series ISR with Multimode LTE feature for global wireless networks. C896VAG-LTE-GA-K9 comes with a Sierra Wireless MC7304 modem.
C897VAG-LTE-GA-K9	• LTE • HSPA+ • HSPA • UMTS • EDGE • GPRS	Global (Europe, New Zealand, and Australia)	LTE: • 800 MHz (band 20) • 900 MHz (band 8) • 1800 MHz (band 3) • 2100 MHz (band 1) • 2600 MHz (band 7) 3G (UMTS, HSPA+, HSPA): • 800 MHz (band 6) • 850 MHz (band 5) • 900 MHz (band 8) • 1900 MHz (band 2) • 2100 MHz (band 1) 2G (GSM, EDGE, GPRS): • 850 MHz • 900 MHz • 1800 MHz • 1900 MHz	Cisco 890 series ISR with Multimode LTE feature for global wireless networks. C897VAG-LTE-GA-K9 comes with a Sierra Wireless MC7304 modem.

SKU ID	Mode	Operating Region	Frequency Band	Description
C897VAMG-LTE-GA-K9	• LTE • HSPA+ • HSPA • UMTS • EDGE • GPRS	Global (Europe, New Zealand, and Australia)	LTE: • 800 MHz (band 20) • 900 MHz (band 8) • 1800 MHz (band 3) • 2100 MHz (band 1) • 2600 MHz (band 7) 3G (UMTS, HSPA+, HSPA): • 800 MHz (band 6) • 850 MHz (band 5) • 900 MHz (band 8) • 1900 MHz (band 2) • 2100 MHz (band 1) 2G (GSM, EDGE, GPRS): • 850 MHz • 900 MHz • 1800 MHz • 1900 MHz	Cisco 890 series ISR with Multimode LTE feature for global wireless networks. C897VAMG-LTE-GA-K9 comes with a Sierra Wireless MC7304 modem.
C898EAG-LTE-GA-K9	• LTE • HSPA+ • HSPA • UMTS • EDGE • GPRS	Global (Europe, New Zealand, and Australia)	LTE: • 800 MHz (band 20) • 900 MHz (band 8) • 1800 MHz (band 3) • 2100 MHz (band 1) • 2600 MHz (band 7) 3G (UMTS, HSPA+, HSPA): • 800 MHz (band 6) • 850 MHz (band 5) • 900 MHz (band 8) • 1900 MHz (band 2) • 2100 MHz (band 1) 2G (GSM, EDGE, GPRS): • 850 MHz • 900 MHz • 1800 MHz • 1900 MHz	Cisco 890 series ISR with Multimode LTE feature for global wireless networks. C898EAG-LTE-GA-K9 comes with a Sierra Wireless MC7304 modem.

SKU ID	Mode	Operating Region	Frequency Band	Description
C899G-LTE-GA-K9	• LTE • HSPA+ • HSPA • UMTS • EDGE • GPRS	Global (Europe, New Zealand, and Australia)	LTE: • 800 MHz (band 20) • 900 MHz (band 8) • 1800 MHz (band 3) • 2100 MHz (band 1) • 2600 MHz (band 7) 3G (UMTS, HSPA+, HSPA): • 800 MHz (band 6) • 850 MHz (band 5) • 900 MHz (band 8) • 1900 MHz (band 2) • 2100 MHz (band 1) 2G (GSM, EDGE, GPRS): • 850 MHz • 900 MHz • 1800 MHz • 1900 MHz	Cisco 890 series ISR with Multimode LTE feature for global Wireless networks. C899G-LTE-GA-K9 comes with a Sierra Wireless MC7304 modem.
C899G-LTE-VZ-K9	• LTE • EVDO Rev-A • 1xRTT	North America (Verizon)	LTE: • AWS (band 4) • 700 MHz (band 13) • PCS 1900 MHz (band 25) 3G: • 800 MHz (band class 0) • 1900 MHz (band class 1) • 800 MHz (band class 10) 2G: • 800 MHz (band class 0) • 1900 MHz (band class 1) • 800 MHz (band class 10)	Cisco 890 series ISR with Multimode LTE feature for Verizon wireless networks. C899G-LTE-VZ-K9 comes with a Sierra Wireless MC7350 modem.

SKU ID	Mode	Operating Region	Frequency Band	Description
C899G-LTE-NA-K9	• LTE • HSPA+ • HSPA • UMTS • EDGE • GPRS	North America (AT&T, Bell-Canada, Roger, Telus, and other GSM/LTE operators in USA and Canada)	LTE: • AWS (band 4) • 700 MHz (band 5) • 850 MHz (band 17) • 1900 MHz (band 2) • 2600 MHz (band 7) 3G (UMTS, HSPA+, HSPA): • 1900 MHz (band 2) • AWS (band 4) • 850 (band 5) 2G (GSM, EDGE, GPRS): • 850 MHz • 900 MHz • 1800 MHz • 1900 MHz	Cisco 890 series ISR with Multimode LTE feature for wireless networks in USA and Canada. C899G-LTE-NA-K9 comes with a Sierra Wireless MC7354 modem.
C899G-LTE-ST-K9	• LTE • EVDO Rev-A • 1xRTT	North America (Sprint)	LTE: • AWS (band 4) • 700 MHz (band 13) • PCS 1900 MHz (band 25) 3G: • 800 MHz (band class 0) • 1900 MHz (band class 1) • 800 MHz (band class 10) 2G: • 800 MHz (band class 0) • 1900 MHz (band class 1) • 800 MHz (band class 10)	Cisco 890 series ISR with Multimode LTE feature for Sprint wireless networks. C899G-LTE-ST-K9 comes with a Sierra Wireless MC7350 modem.

SKU ID	Mode	Operating Region	Frequency Band	Description
C899G-LTE-JP-K9	• LTE • HSPA+ • HSPA • UMTS • EDGE • GPRS	Global (Japan)	LTE: • 800 MHz (band 20) • 850 MHz (band 19) • 900 MHz (band 8) • 1500 MHz (band 21) • 1800 MHz (band 3) • 2100 MHz (band 1) • 2600 MHz (band 7) 3G (UMTS, HSPA+, HSPA): • 800 MHz (band 6) • 850 MHz (band 5) • 900 MHz (band 8) • 1900 MHz (band 2) • 2100 MHz (band 1) 2G (GSM, EDGE, GPRS): • 850 MHz • 900 MHz • 1800 MHz • 1900 MHz	Cisco 890 series ISR with Multimode LTE feature for global wireless networks. C899G-LTE-JP-K9 comes with a Sierra Wireless MC7330 modem.

SKU ID	Mode	Operating Region	Frequency Band	Description
C897VAG-LTE-LA-K9	C897VAG-LTE-LA-K9 is a dedicated Multimode LTE SKU for Latin American wireless networks and comes with a Sierra Wireless MC7430 modem.	• LTE • HSPA+ • HSPA • UMTS	Latin America	For FDD LTE: • 700 MHz (band 28) • 850 MHz (band 5) • 800 MHz (band 19) • 800 MHz (band 18) • 900 MHz (band 8) • 1800 MHz (band 3) • 2100 MHz (band 1) • 2600 MHz (band 7) For TDD LTE: • 1900 MHz (Band 39) • 2300 MHz (Band 40) • 2500 MHz (Band 41) • 2600 MHz (Band 38) For UMTS, HSPA+, HSPA: • 800 MHz (band 6) • 800 MHz (band 19) • 850 MHz (band 5) • 900 MHz (band 8) • 1700 MHz (band 9) • 2100 MHz (band 1)

SKU ID	Mode	Operating Region	Frequency Band	Description
C898EAG-LTE-LA-K9	C898EAG-LTE-LA-K9 is a dedicated Multimode LTE SKU for ASEAN wireless networks and comes with a Sierra Wireless MC7430 modem.	• LTE • HSPA+ • HSPA • UMTS	ASEAN	For FDD LTE: • 700 MHz (band 28) • 850 MHz (band 5) • 800 MHz (band 19) • 800 MHz (band 18) • 900 MHz (band 8) • 1800 MHz (band 3) • 2100 MHz (band 1) • 2600 MHz (band 7) For TDD LTE: • 1900 MHz (Band 39) • 2300 MHz (Band 40) • 2500 MHz (Band 41) • 2600 MHz (Band 38) For UMTS, HSPA+, HSPA: • 800 MHz (band 6) • 800 MHz (band 19) • 850 MHz (band 5) • 900 MHz (band 8) • 1700 MHz (band 9) • 2100 MHz (band 1)
C899G-LTE-LA-K9	C899G-LTE-LA-K9 is a dedicated Multimode LTE SKU for Latin American wireless networks and comes with a Sierra Wireless MC7430 modem.	• LTE • HSPA+ • HSPA • UMTS	Latin America and APAC	For FDD LTE: • 700 MHz (band 28) • 850 MHz (band 5) • 800 MHz (band 19) • 800 MHz (band 18) • 900 MHz (band 8) • 1800 MHz (band 3) • 2100 MHz (band 1) • 2600 MHz (band 7) For TDD LTE: • 1900 MHz (Band 39) • 2300 MHz (Band 40) • 2500 MHz (Band 41) • 2600 MHz (Band 38)

The following figure explains the 4G LTE packet core network architecture.

Figure 1: 4G LTE Packet Core Network Architecture

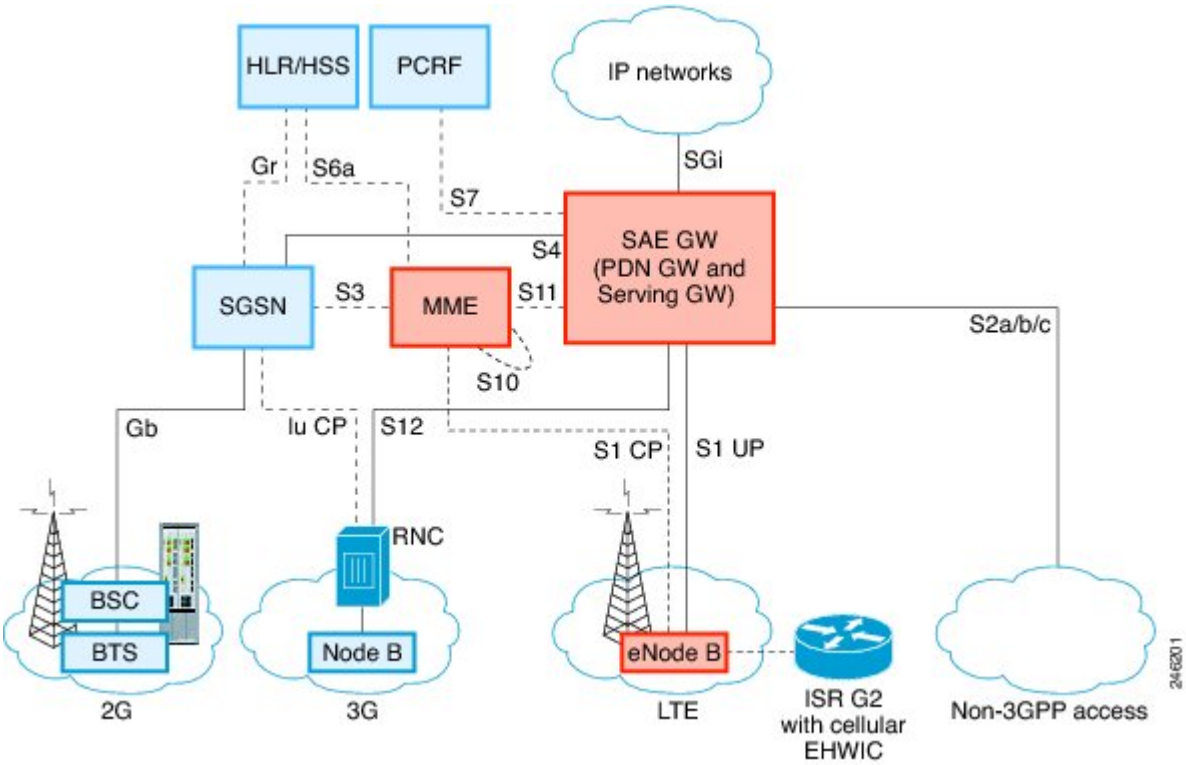

Gateways	The Serving Gateway (SGW) routes and forwards user data packets, while also acting as the mobility anchor for the user plane, and is the anchor for mobility between LTE and other 3GPP technologies. The Packet Data Network (PDN) Gateway (PGW) provides connectivity from the User Equipment (UE) to external packet data networks by being the point of exit and entry of traffic for the UE. A UE may have simultaneous connectivity with more than one PGW for accessing multiple PDNs. The PGW performs policy enforcement, packet filtering for each user, charging support, lawful interception, and packet screening. Another key role of the PGW is to act as the anchor for mobility between 3GPP and non-3GPP technologies such as WiMAX and 3GPP2 (CDMA 1X and EvDO). The System Architecture Evolution GW (SAE GW) is the entity that covers the PGW and SGW functionality in the Evolved Packet Core (EPC).
RNC	The Radio Network Controller (RNC) is responsible for controlling the Radio Access Network (RAN) that are connected to it. The RNC carries out radio resource management and some of the mobility management functions and is the point where encryption is done before user data is sent to and from the mobile. The RNC connects to the Circuit-Switched Core Network through the Media Gateway (MGW).
BTS	Base Transceiver Station.
BSC	Base Station Controller.
SGSN	Service GPRS Support Node.

Cisco 4G LTE Features

Cisco 4G LTE WWAN EHWICs, Cisco 1110 Series 4G LTE routers support the following major features:

- Global Positioning System (GPS) and National Marine Electronics Association (NMEA) streaming.
- 4G Short Message Service (SMS)
- 3G/4G Simple Network Management Protocol (SNMP) MIB
- Auto-switch failover between primary and backup link
- Multichannel-interface-processor (MIP) profile configuration
- Remotely initiated data callback using voice
- Remotely initiated data callback using Short Message Service (SMS)
- Remote firmware upgrade over 4G LTE
- Virtual diagnostic monitoring
- Mobile Equipment Personalization (MEP) lock and unlock capabilities
- SIM lock and unlock capabilities
- Multiple PDN Contexts
- Quality of Service

4G GPS and NMEA

The Global Positioning System (GPS) feature is enabled by default on the supported Cisco 1110 Series routers and Cisco 4G LTE EHWICs to provide the geographical location.

Active GPS is supported on the SubMiniature version A (SMA) port. Active GPS antenna is supported only in the standalone mode. An Active GPS antenna includes a built-in Low-Noise Amplifier that provides sufficient gain to overcome coaxial cable losses while providing the proper signal level to the GPS receiver. Active GPS antennae require power from the GPS receiver SMA port to operate. See the Example: Connecting to a Server Hosting a GPS Application section for more information.

National Marine Electronics Association (NMEA) streams GPS data either from a 4G EHWIC or a Cisco 1110 series router through a virtual COM port and a TCP/IP Ethernet connection to any marine device (such as a Windows-based PC) that runs a commercially available GPS-based application.

The following GPS and NMEA features are supported on the Cisco 1110 series routers:

- GPS standalone mode (satellite-based GPS).
- Cisco IOS CLI display coordinates.
- Virtual and physical serial ports can export NMEA-formatted GPS data.
- External application displays router map location.
- Objects in the CISCO-WAN-3G-MIB supports GPS and NMEA features.
- The Cisco 4G LTE EHWIC supports only the IP NMEA streaming option.
- The Cisco 1110 series routers can support either IP or serial NMEA streaming options.

Note Assisted GPS mode is not supported.

For instructions on setting up the GPS antenna, see the Cisco 4G Indoor/Outdoor Active GPS Antenna (GPS-ACT-ANTM-SMA) document.

For information on Customer Advisory on GPS rollover, see the Mandatory firmware upgrade for all MC73xx Modems document.

Connecting to a Server Hosting a GPS Application

You can feed the NMEA data to a remote server that hosts the GPS application. The server can be connected to the router either directly using an Ethernet cable or through a LAN or WAN network. If the application supports serial port, run a serial port emulation program to create a virtual serial port over the LAN or WAN connection.

Note Microsoft Streets & Trips is a licensed software that you can download from the Microsoft website.

To connect a Cisco 1110 series router through IP to a PC running Microsoft Streets & Trips, perform the following steps:

1. Connect the PC to the router using an Ethernet cable.
2. Ensure that the PC and router can ping.
3. Launch the serial port redirector on the PC.
4. Use the **show line** command in the privileged EXEC mode to locate the NMEA port on the router.
5. Create a virtual serial port that connects to the NMEA port on the router.
6. Launch **Microsoft Streets & Trips** on your PC.
7. Select the GPS Menu.
8. Click Start Tracking.
9. If you have acquired a location fix from the **show cellular gps** command output on the router, the current location is plotted on the graph, and a reddish brown dotted cursor with a circle around it is seen on the map.

Note If you have not acquired a location fix, the Microsoft application times out and disconnects.

Short Message Service (SMS) Capabilities

Cisco 4G LTE EHWICs and Cisco 1110 series routers support receiving, transmitting, archiving, and deleting of SMS messages. This support includes the ability to view up to 25 received texts, and archive more messages in a custom file location. SMS is supported on multiple carriers. Cisco 4G LTE EHWICs and Cisco 1110 series routers also have the capability to revert from LTE SMS to 3G and 2G SMS technology if necessary.

A sending device behind a Cisco 4G LTE router transmits an SMS text message over the 4G cellular link through cellular towers until it the message reaches the recipient’s router, which then notifies the recipient device, such as a cell phone. The receiving device uses the same process to return a reply to the sending device. The following figure describes the flow from a mobile device to a sending device. For SMS transmission to work, end users must have a text-capable device, and optionally, a text plan. If end users do not have a text plan, standard SMS rates apply to their text transmissions.

The SMS-initiated Data Callback feature allows customers to set up a data connection by sending a text message to the Cisco 4G LTE router and includes the message screening functionality using the originating number to improve feature security and eliminate unauthorized callback requests.

Figure 2: SMS Network

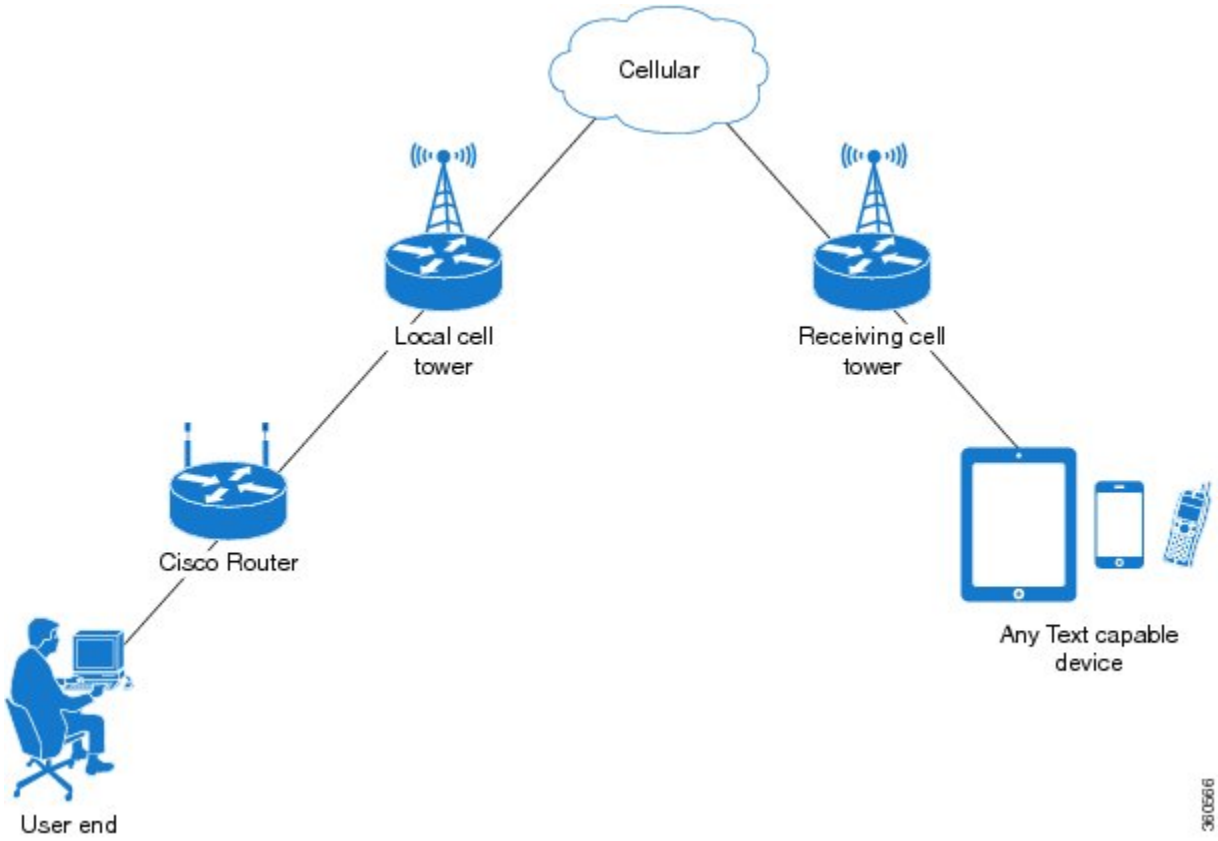

Using a SIM Card

Cisco 4G LTE EHWICs and Cisco 1110 series routers need an active SIM card provided by a service provider. The SIM cards are usually provided in an unlocked state so that it can be used without a Personal Identification Number (PIN). If the SIM is unlocked, it can be inserted into an EHWIC and used without an authorization code.

The SIM can be initially locked with a PIN code (4 to 8 digits s long) defined by the service provider. Contact your service provider for the PIN code.

The SIM-Lock feature allows a SIM to be locked or unlocked with a PIN code so that it is used only in an authorized device. Perform the SIM lock and unlock procedures using the Cisco IOS CLI through a console or Telnet/SSH to the router.

After the SIM is locked, it cannot initiate a call unless authentication is done using the same PIN. Authentication is done automatically by Cisco IOS through configuration of the PIN. This mandatory configuration for automatic SIM authentication is done using the Cisco IOS CLI as part of the router startup configuration.

After the Cisco IOS configuration is in place, the router can initiate an LTE connection. The router uses the configured PIN to authenticate prior to the LTE connection. If the Cisco IOS PIN configuration is missing or if the PIN is incorrect, the SIM authentication will fail and the connection will not be initiated.

If the locked SIM is moved to a different router or to another device, or if the EHWIC in which the locked SIM resides is moved to a different EHWIC slot in the same router, the router configuration should be changed. The configuration is associated with the cellular controller that is specific to a router EHWIC slot number.

This will ensure that the SIM card will not be used in any unauthorized device, or, if there are multiple LTE EHWICs in a single ISR, that the appropriate PIN is applied to each LTE EHWIC/SIM. An authentication command (with the same PIN used to lock the SIM) must be defined on the new device or on the new cellular controller slot to successfully initiate the LTE connection.

Note It is very important to use the correct PIN after it is configured. The SIM card will be blocked if the wrong PIN is entered three consecutive times on a locked SIM during authentication or when trying to unlock a locked SIM. You can unblock a blocked SIM card using the PUK code. Contact your service provider for the PUK code. Use the **cellular** *slot* **lte sim unblock** *PUK-code new-PIN-code* command to unblock the SIM.

The following procedures are used to configure a SIM:

Data Account Provisioning

One or more modem data profiles can be created to provision a modem on a 3G or 4G EHWIC. An active wireless account with a service provider with one or more (dual) SIM cards must be installed. The modem data profile is preconfigured on the modem.

The following tasks are used to verify the signal strength and service availability of the modem and to create, modify, and delete modem data profiles:

IP Multimedia Subsystem Profiles

IP Multimedia Subsystem (IMS) profiles establish a session, and are a part of the modem configuration and are stored in the modem's NVRAM. An IMS network is an access-independent and standard-based IP connectivity service that enables different types of multimedia services to end users using common Internet-based protocols. See Creating, Modifying, or Deleting Modem Data Profiles, on page 49, for more information.

Usage Guidelines for Creating, Modifying, or Deleting Data Profiles

You can create multiple profiles on Cisco 4G LTE EHWICs and Cisco 1110 series routers. The following are the default Internet profile numbers for some of the modems:

- MC7700—Profile 1
- MC7710—Profile 1
- MC7750—Profile 3
- MC7304—Profile 1
- MC7350—Profile 3
- MC7354—Profile 1
- MC7430—Profile 1

For information on supported modems on each SKU, see the tables in the Overview of Cisco 4G LTE, on page 2.

The maximum number of profiles that can be created for each modem is given as follows:

- MC7700—Up to 16 profiles
- MC 7710—Up to 16 profiles
- MC7750—Up to 6 profiles
- MC7304—Up to 16 profiles
- MC7350—Up to 6 profiles

- MC7354—Up to 16 profiles
- MC7430—Up to 16 profiles

The default data profile numbers for the various modem SKUs are given as follows:

-
  - MC7700, MC7710, MC7354, MC7304 – Profile 1
  - MC7750, MC7350– Profile 3
  - MC7430–Profile 1

The data profile is displayed by using the **show cellular** *unit* **profile** command with an asterisk(*).

Follow these guidelines while you configure a data profile:

- In most cases, you do not have to make any profile-related changes if your modem comes with a data profile, for instance, AT&T, Sprint and Verizon.
- If any profile parameter changes are required for a connection type, the changes will most likely be carried out in the default profiles.
- To configure different profile types and use them for a different connection, you can create separate profiles with different parameters (for instance, APN names). Note that only one profile is active at a given time.
- Use the **show cellular profile** command to view the data profile. An asterisk(*) is displayed against the data profile.
- The data profile is used to set up a data call. If you want to use a different profile, that profile needs to be made the default one. Use the **lte sim data-profile** *number* command to change the default profile.
- To verify the completed sets of 3GPP and 3GPP2 profiles, enable the **debug cellular 0/x/0 message profile** command and then enter the **show cellular 0 profile** command. This debug command is applicable for 4G LTE SKUs with MC7750 and MC7350 modems.

If you are using the MC7750(EHWIC-LTE-4G-V and C819-LTE-4G-V), avoid modifying the *ims* profile (Profile 1 displayed in the **show** command with a ** against it). Typically, you have to modify Profile 3 for an APN update.

Note For the EHWIC, the *unit* argument identifies the router slot, WIC slot, and port separated by slashes (0/0/0). For the Cisco 1110 Series 4G LTE routers, the *unit* argument identifies slot “0” for all commands.

4G LTE LEDs

The following table describes 4G LTE EHWIC and Cisco 1110 series LED behavior:

Table 4: 4G LTE LED Descriptions

LED	Color	Description
SYS	Yellow	FPGA download is complete.
	Green (blinking)	ROMMON is operational.
	Green (solid)	Cisco IOS is operational.
	Green (four blinks during bootup)	Reset button has been pushed during the bootup.

LED	Color	Description
	Off	After powering up, when FPGA is being downloaded (in ROMMON).
ACT	Green	Network activity on FE switch ports, GE WAN port, 3G cellular interface, and serial interfaces.
	Off	No network connectivity.
WWAN	Green Solid —On	Module is powered on and connected, but is not transmitting or receiving.
	Green (slow blinking) —On 5sec, Off 200ms	Module is powered on and searching for connection.
	Green (fast blinking) —On 400ms, Off 100ms	Module is transmitting or receiving.
	Green (blinking) —On 500ms, Off 500ms	Module in Low Power Mode. Modem radio is OFF
	Off	Module is not powered.
GPS - EHWIC	Green (solid)	GPS coordinates are obtained.
	Off	GPS is disabled, GPS is enabled without GPS mode and NMEA configuration, or GPS is acquiring.
GPS - 819 ISR	Green (solid)	GPS coordinates are obtained.
	Green (blinking)	GPS is acquiring.
	Off	GPS is disabled or GPS is enabled without GPS mode and NMEA configuration.
RSSI	Green (solid)	Signal > –60 dBm Very strong signal
	Green (three blinks and then a long pause)	Signal <= –60 to 74 dBm Strong signal
	Green (two blinks and then a long pause)	Signal <= –75 to 89 dBm Fair signal
	Green (one blink and then a long pause)	Signal <= –90 to 109 dBm Marginal signal
	Off	Signal <= –110 dBm Unusable signal

LED	Color	Description
SIM	Green / Yellow (one green blink followed by two yellow blinks)	SIM in slot 0 is active, SIM in slot 1 is not.
	Yellow / Green (one yellow blink followed by two green blinks)	SIM in slot 1 is active, SIM in slot 0 is not.
	Off / Green (two green blinks and then a pause)	No SIM in slot 0, SIM present in slot 1.
	Green / Off (slow single green blink and then a pause)	SIM present in slot 0, no SIM in slot 1.
	Off / Off	No SIM present in either slots.
3G/4G	Green (one blink and then a pause)	For 1xRTT, EGPRS, or GPRS service.
	Green (two blinks and then a pause)	For EVDO, EVDO/1xRTT, or UMTS service.
	Green (three blinks and then a pause)	For EVDO/1xRTT RevA, HSPA, or HSUPA/HSDPA service.
	Green (four blinks and then a pause)	For HSPA+ service.
	Green (Solid)	For 4G/LTE service.
	Off	No service.

Multiple PDN Contexts

This feature enables router to connect to multiple (currently two) packet data networks. This allows users to enable different features independently on each PDN. For instance, the first PDN can be used for public Internet access and the second one for VPN connectivity; each PDN has its own set of IP addresses and QoS characteristics.

During the initialization of the router, two cellular interfaces corresponding to the two PDNs are created:

- **cellular 0/x/0** and **cellular 0/x/1** on EHWIC
- **cellular 0** and **cellular 1** on C8xx

These interfaces can be viewed as two logical interfaces using the same radio resources.

Note This feature is supported on Global, Australia, Canada, and AT&T SKUs. This feature is not supported on Sprint and Verizon SKUs.

Note Here onwards, the interface **cellular 0/x/0** on EHWIC and **cellular 0** on C8xx are referred as the first PDN, and **cellular 0/x/1** on EHWIC and **cellular 1** on C8xx as the second PDN.

The first step, in bringing up the two PDNs, is applying the configuration on both the cellular interfaces and their corresponding lines, in order to make two simultaneous data calls.

The next step is associating the data-bearer profile with its corresponding cellular interface or PDN. It is sufficient to associate the profile for just the first PDN under the controller cellular configuration. Note that the second PDN assumes a profile that is just one above the profile used for the first PDN. For example, if the first PDN uses profile 1, the second PDN uses profile 2 automatically when the call is initiated for the second one.

After the interesting traffic is routed through these cellular interfaces, data calls are initiated and each interface is assigned its own IP and DNS addresses provided by the cellular network. Note that both PDNs share radio resources. Therefore, any throughput measurement needs to take into account the aggregate throughput on both PDNs, instead of just one.

Call History

Call history maintains the history of the last three calls. The following details are recorded in the call history:

- Tx/Rx bytes
- Reason for disconnecting the call
- Duration of the call
- Who disconnected the call; User, Modem, or Network

Use the **show cellular unit connection history** command to display the call history. Note that this feature has dependency on modem firmware and SDK used.

The following example shows the output of the command when the call connection is up:

```
c1921-mc7304#show cell 0/1/0 connection call-history
Start Time                    Stop Time                     Duration
Fri Nov  7 10:30:11 2014      Fri Nov  7 10:31:28 2014      77 seconds
Call disconnect reason
Call end mode =
Session disconnect reason type = (0)
Session disconnect reason = (0)
Fri Nov  7 10:33:20 2014      ongoing
```

The following example shows the output of the command when the call connection is down:

```
1921-mc7304#show cell 0/1/0 connection call-history
Start Time                    Stop Time                     Duration
Fri Nov  7 10:30:11 2014      Fri Nov  7 10:31:28 2014      77 seconds
Call disconnect reason
Call end mode =
Session disconnect reason type = (0)
Session disconnect reason = (0)
Fri Nov  7 10:33:20 2014      Fri Nov  7 10:36:14 2014      174 seconds
Call disconnect reason
Call end mode =
Session disconnect reason type = (0)
Session disconnect reason = (0)
```

Dual SIM

The Dual SIM feature provides a failover mechanism in case the active SIM loses connectivity to the network.

Note Dual SIM is supported only on Cisco 819 Series 4G LTE ISRs, Cisco C880 Series 4G LTE ISRs and Cisco C890 Series 4G LTE ISRs. Dual SIM is not supported on EHWICs although modular ISRs can have multiple 4G EHWICs.

Usage Guidelines for Configuring a Dual SIM

Follow these guidelines while you configure a dual SIM:

- By default, SIM slot 0 is the primary slot, and slot 1 is the backup.
- To change the primary SIM slot, use the **lte sim primary** command in the cellular controller configuration mode.
- Assign profiles for each SIM using the **lte sim data-profile** command. Each SIM has an associated data profile and an attach profile.
- In the **lte sim data-profile** command, the *profile-number* refers to the data profile associated with a SIM. The *attach-profile-number* is the attach profile associated with a SIM.

```
If the attach profile details are not provided by or are not relevant to the carrier, you
can assign the same number as the data profile. Otherwise, create a profile with the
carrier-specific attach profile

parameters and assign that profile number using the lte sim data-profile
command.
```

Quality of Service

Quality of Service (QoS) ensures priority treatment for certain services during times of congestion in the network. In an LTE network, the QoS is implemented between a User Equipment (UE) and a Packet Data Network (PDN) gateway. QoS treatment is applied to a set of associated data bearers. A bearer is a virtual data path between the UE and the PDN gateway that carries a particular type of service, such as VoIP. A bearer is identified by a set of parameters, known as Traffic Flow Template (TFT) parameters. Both the network the and IOS configurations apply bandwidth related parameters to these bearers, so as to achieve an end-to-end bearer-level QoS. For example, VoIP traffic is carried by a particular bearer which is assigned a guaranteed bandwidth, and is prioritized over the web browser traffic which is carried over by another bearer.

Cisco 4G-LTE interface on ISRG2 routers supports only network-initiated QoS. If the QoS is subscribed by a given UE, the network establishes the bearers between the UE and the core network after the UE has attached to the network. Otherwise, only a default data-bearer is created between the UE and the network. No user intervention is needed for the purposes of establishing these dedicated bearers.

Cisco 4G-LTE interface on ISRG2 routers support a maximum of 8 bearers. These bearers are created based on the Traffic Flow Template (TFT) parameters that are downloaded to the UE after it attaches to the core network. The host router must be configured to shape the overall traffic, as well as the IOS QoS configured parameters on the router must match the subscribed LTE QoS parameters. When the service falls back to 3G, the UE sets up a primary PDP context and the dedicated bearers are removed, with all the traffic flowing via a single PDP context.

The following restrictions apply for QoS:

- UE-initiated QoS is not supported.
- The QoS parameters are determined by the carrier's service contract with the user.

- IOS QoS configuration should match with the subscribed QoS of the service provider network. If there are any changes in the subscribed LTE QoS parameters, this must be correspondingly reflected in the IOS QoS configuration.

Note LTE QoS is supported in Cisco IOS 15.5(1)T and later releases.

Quality of Service Configuration

The following figure is a diagrammatic representation of implementing QoS on 4G LTE network.

Figure 3: QoS on 4G LTE Network

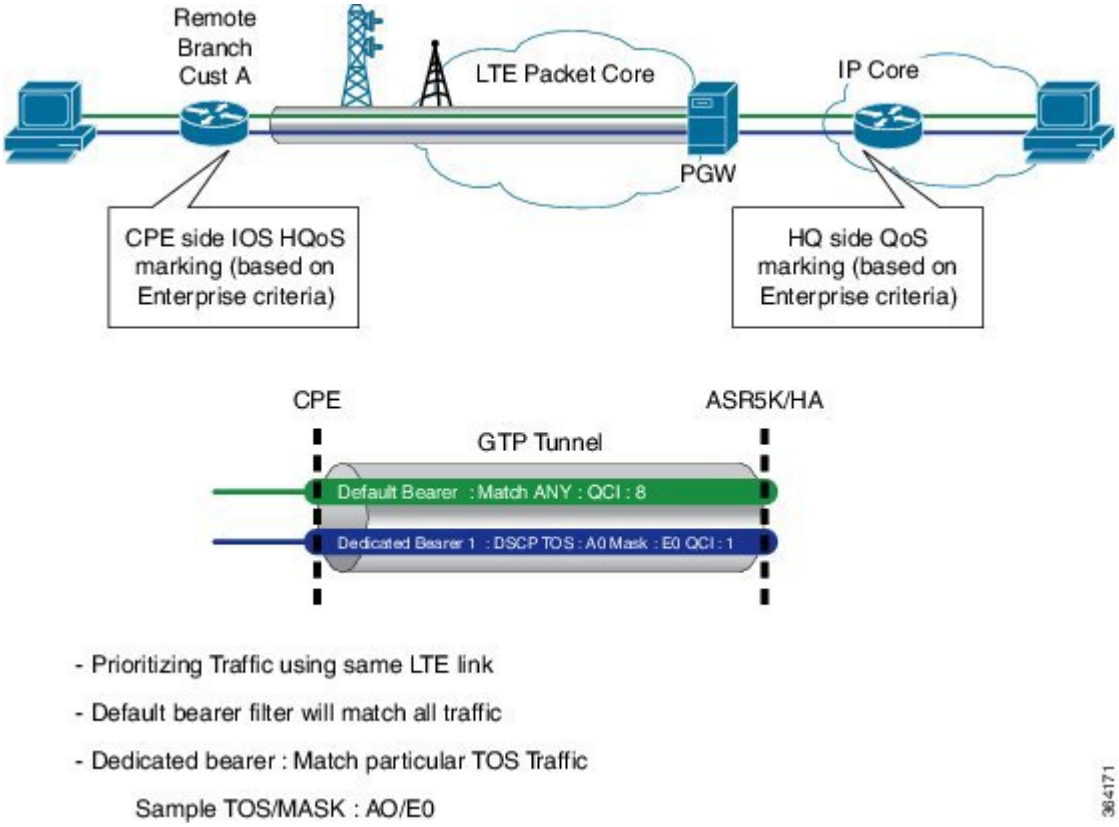

The following example shows a sample recommended configuration. In this example:

- Traffic from the end user is marked in ISRG2 routers; this enables the customer to map their traffic with the carrier-provided LTE QoS policy.
- Traffic from the end-user devices is marked in Ingress interfaces, and is policed in Egress interfaces. Policing in Egress interface can be done based on the carrier provided policy.
- The wide area cellular network is a shared medium and hence it is a variable bandwidth environment. By designing and implementing an effective traffic control policy at the Egress interface (cellular interface), radio resources can be efficiently utilized to support business critical applications. For the IOS QoS to work correctly, the onus is on the end user to determine the appropriate LTE bandwidth for traffic shaping purposes.

In this example, the carrier has provided the following LTE policy:

- 1 default bearer: Best effort
- 1 Non-GBR dedicated bearer: Allow DSCP CS4: Rate-limited to 500 Kbps
- 1 GBR dedicated bearer: Allow DSCP CS5: rate limited to 50 Kbps
- Overall average bandwidth is taken into account and the egress traffic is shaped to 1.5 Mbps

The following figure shows the Ingress Traffic Marking Policy configuration:

Figure 4: Ingress Traffic Marking Policy Configuration

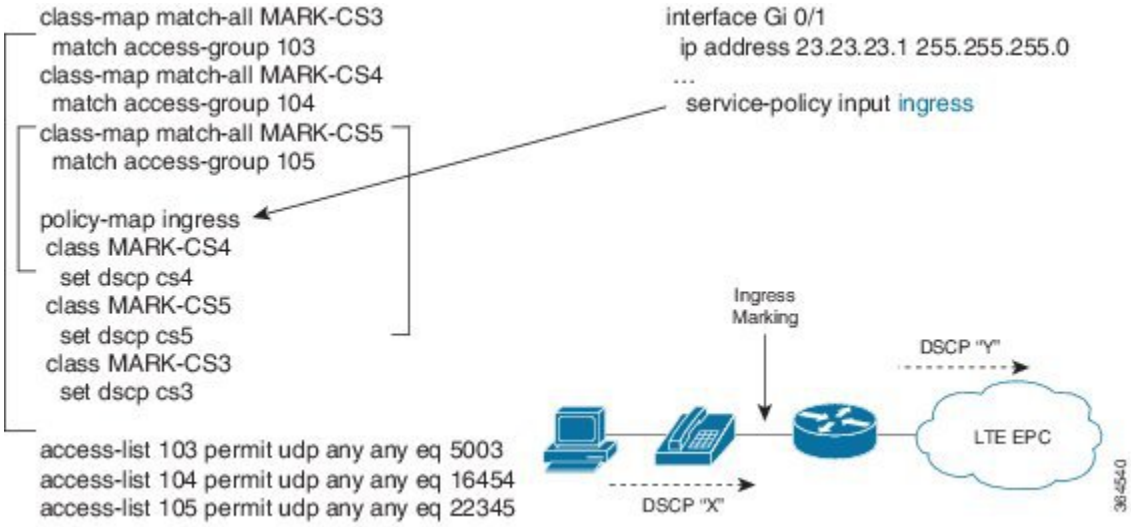

The following figure shows the Egress Class-Based Traffic Control Policy configuration:

Figure 5: Egress Class-based Traffic Control Policy Configuration

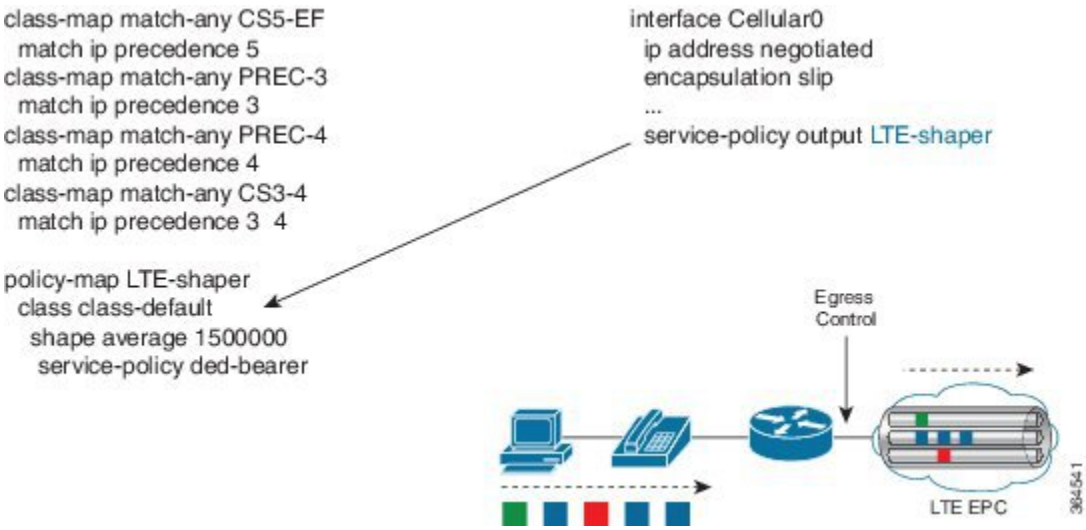

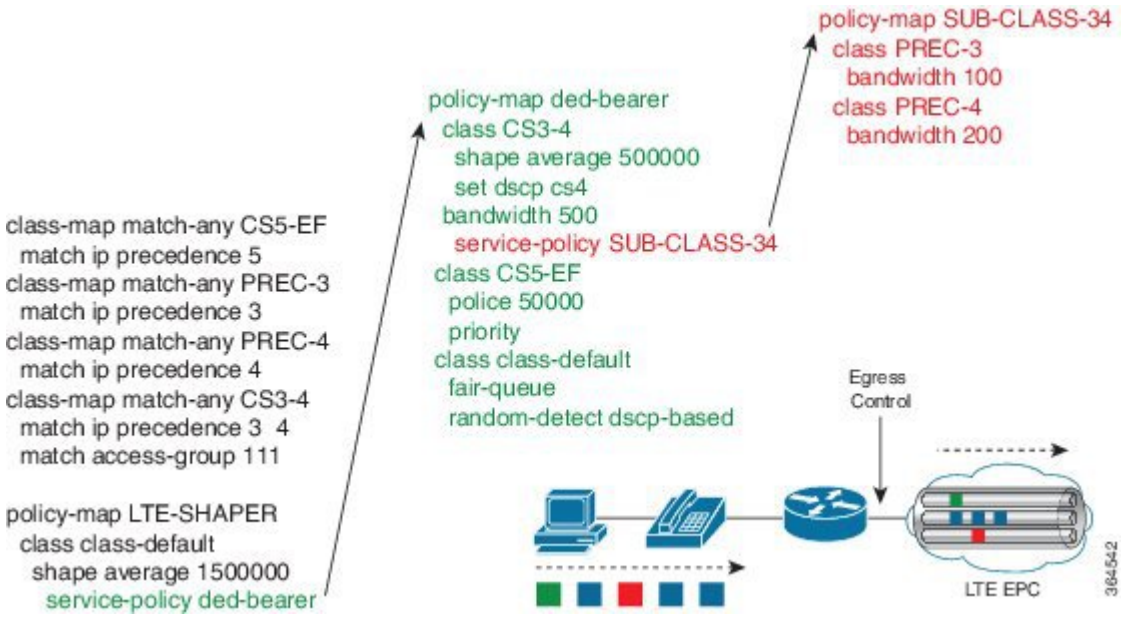

For more information about configuring QoS features, see Quality of Service Solutions Configuration Guide Library, Cisco IOS Release 15M&T.

Troubleshooting QoS

The cellular interface notifies a user with a syslog message when QoS is enabled during the router boot-up, or when the modem attaches to the network. It also sends a message when a TFT profile is added, deleted, or modified by the core network. Users need to change the configuration on their side to match TFT profile. The following table lists the syslog messages generated for various events.

Table 5: Syslog Messages

Syslog Message	Description
`DEDICATED_BEARER_UP: Dedicated bearer (bearer_id=%d) in HWIC slot %d/%d is now UP`	The dedicated bearer has been added. Check the TFT rules of the dedicated bearer by using the **show cellular** command, and add QoS configuration accordingly.

`DEDICATED_BEARER_DOWN:`
 	
`Dedicated bearer (bearer_id=%d) in HWIC slot %d/%d is now down`
	There could be a network issue that needs further investigation. Contact your carrier.

`DEDICATED_BEARER_DELETED: Dedicated bearer (bearer_id=%d) in HWIC slot %d/%d is now deleted`	The host QoS configuration may need to be modified to match the modem configuration. Check the TFT rules of the bearer by using the **show cellular** command, and configure the host QoS configuration to match the TFT rules.
`DEDICATED_BEARER_MODIFIED: Dedicated bearer (bearer_id=%d) configuration in HWIC slot %d/%d is modified`	The dedicated bearer configuration has been modified. Check the TFT rules of the bearer by using the **show cellular** command, and configure the host QoS configuration to match the TFT rules.

Cellular Modem Link Recovery

The Cellular Modem Link Recovery feature is used to check whether the modem functions properly and bring back the modem to normal operation state if the modem is in inoperative state. When an inoperative state is identified, the modem is reset (the cellular modem is power cycled). Link recovery is enabled by default.

There are four configurable parameters to adjust the behavior of cellular link recovery. The default values have been optimized for the best performance of the feature and changing it is not recommended unless advised by Cisco.

The following table explains the cellular modem link recovery parameters.

Table 6: Cellular Modem Link Recovery Parameters

Parameter	Description
rssi onset-threshold	This parameter defines the RSSI value below which the link recovery feature triggers additional scrutiny to look for potential issues and take action if needed. The range of this parameter can be set from -90 dBm to -125 dBm. The recommended and default value is -110 dBm.
monitor-timer	This parameter determines how often link recovery looks for potential issues. The default value for this parameter is 20 seconds which means, link recovery feature will be triggered every 20 seconds and look at certain parameters to determine if there is a potential issue. You can configure the monitor-timer range between 20 to 60 seconds. Increasing the monitor timer value above 20 seconds will increase the response time of the feature.
wait-timer and debounce-count	The wait-timer parameter is used in conjunction with the debounce-count parameter to perform more frequent, additional checks, once the link recovery feature has identified a potential issue that needs to be recovered from, with a modem power-cycle. The default value for wait-timer is 10 seconds and the default value for debounce- count is 6. With this setting, once link recovery has identified an inoperative modem state, it performs additional checks every 10 seconds, up to 6 times, to determine if the issue has been resolved without a modem reset. Reducing the debounce-count and the wait-timer makes faster link recovery, while reducing them may increase the time for recovery. The configurable range for wait-timer is 5-60 seconds. The configurable range for debounce-count is 6-20 seconds.

Cellular Modem Link Recovery Monitoring and Statistics

When the cellular modem link recovery occurs and modem is reset, you can see the **%CELLWAN-2-MODEM_DOWN** message on the console logs. Effective with Cisco IOS release 15.6(2.0c)T0, additionally there is a **%CELLWAN-2-LINK_RECOVERY** message which indicates that action has been taken by the cellular modem link recovery feature.

Whenever the cellular modem link recovery is occurred, it updates the Modem timeouts counter under the Modem Management Statistics section of the **show controller cellular** *unit* command output. Modem parameters at the last timeout section has information that helps to identify the cause of the issue that triggered link recovery

In the following example log, the messages, modem time out counter, and modem parameters at the last time out are highlighted.

```
*Jul 19 17:15:18.980 PDT: %CELLWAN-2-LINK_RECOVERY: Cellular0/1/0: Cellular Modem has been
 power cycled
Router# show controller cellular 0/1/0
Interface Cellular0/1/0
 LTE Adv WWAN NIM - Latin America Multimode LTE/DC-HSPA+/HSPA+/HSPA/UMTS/EDGE/GP unit 1
manufacture id:  0x00001199     product id: 0x00009071
 Sierra Wireless Direct IP EM7430 modem
 GPS Feature: enabled
 GPS Mode Configured: not configured
 GPS Status: NMEA Disabled
 Cellular Dual SIM details:
 ---------------------------


 SIM 0 is present
 SIM 1 is present
 SIM 0 is active SIM

  Module OIR Details
 ----------------------------------------------
  Module type : NIM-LTEA-LA
  Module Serial Number : FOC20084WGP
  Module Last Inserted on : Tue Jul 19 10:16:34 2016
 ----------------------------------------------
  Module Reload Statistics
 -------------------------
  Soft OIR reloads = 0
  Hard OIR reloads = 0
 -------------------------

 Modem Management Statistics
 ---------------------------
 Modem resets = 1
 Modem user initiated resets = 0
 Modem user initiated power-cycles = 0
 Modem timeouts = 1
 Modem parameters at the last timeout:
         LTE first time attach State was No
         Radio Interface Technology Mode was AUTO
         Operating Mode was Online
         RSSI was -0 dBm
         Packet switch domain status was Not Attached
         Registration state(EMM) was Not Registered
         Downlink traffic was not present
 Link recovery is ON
Registration check is ON
 RSSI threshold value is -110 dBm
 Monitor Timer value is 20 seconds
 Wait Timer value is 10 seconds
 Debounce Count value is 6
```

PLMN Search and Selection

Starting from Cisco IOS Release 15.5(3)M1, manual Public Land Mobile Network (PLMN) is supported on Cisco 8xx routers and EHWICs. This feature allows you to search for available PLMNs and connect to one of the PLMN.

Restrictions

The following restrictions apply for PLMN search and selection:

- Support in Cisco LTE 2.0 and MC73xx modem series and above.
- You have to verify whether your cellular service supports roaming or not.
- You have to use a SIM card that supports roaming.
- This feature is not supported on 4G+WiFi platforms.
- Supported firmware version is 5.5.58.x or later.
- Supported IOS release is Cisco IOS Release 15.5(3)M1 or later.

Commands

Use the following commands on fixed platforms:

- **cellular x lte plmn search**
- **show cellular x network**
- **cellular x lte plmn select mode mcc mnc rat duration**

Use the following commands on EHWICs:

- **cellular x/x/x lte plmn search**
- **show cellular x/x/x network**
- **cellular x/x/x lte plmn select mode mcc mnc rat duration**

Searching the Network

You can use the **cellular 0 lte plmn search** command to search for available PLMNs. The following example shows how to search for networks:

```
router#cellular 0 lte plmn search
Searching for available PLMNs.This may take up to 3 minutes.
Please wait.........................
PLMN search done. Please use "show cellular 0 network" to see available PLMNS
```

After the search, use the **show cellular 0 network** command to see the available networks:

```
router#show cellular 0 network
Current System Time = Fri Sep 18 18:49:24 2015
Current Service Status = Normal
Current Service = Packet switched
Current Roaming Status = Roaming
Network Selection Mode = Manual
Network = O2 - UK
Mobile Country Code (MCC) = 234
Mobile Network Code (MNC) = 10
Packet switch domain(PS) state = Attached
Location Area Code (LAC) = 4931
Cell ID = 34319
Available PLMNs:
Idx MCC MNC RAT     Desc
1   234 10  umts    O2 - UK
2   234 10  gsm     O2 - UK
3   234 20  umts    3 UK
4   234 30  umts    EE
5   234 15  gsm     voda UK
6   234 33  gsm     EE
7   234 20  lte     3 UK
8   234 30  gsm     EE
9   234 15  umts    voda UK
10  234 30  lte     EE
```

```
11  234 10  lte     O2 - UK
12  234 15  lte     voda UK
```

Selecting the Network

There are three ways to select an available network: Auto mode, Force Mode, and Manual mode. In Auto mode, the router will connect automatically to a network preferred by the SIM card. In Force mode, the router is forced to select an available or known network without performing a network search. If a network is not available or the router is unable to attach to a network, then the router will remain in a 'Not attached' state. You can use the **cellular x lte plan select auto** command to attach the router to a network preferred by the SIM. In Manual mode, you can select an available network from your search result.

The following example shows how to select a network manually:

```
router#cellular 0 lte plmn select manual ?
 0-999 Mobile Country Code (MCC)
router#cellular 0 lte plmn select manual 234 ?
 0-999 Mobile Network Code (MNC)
router#cellular 0 lte plmn select manual 234 10 ?
  gsm   GSM
  lte   LTE
  umts  UMTS
router#cellular 0 lte plmn select manual 234 10 gsm ?
```

The following example shows how to force a network selection:

```
router#cellular 0 lte plmn select force ?
 0-999 Mobile Country Code (MCC)
router#cellular 0 lte plmn select force 310 ?
 0-999 Mobile Network Code (MNC)
router#cellular 0 lte plmn select force 310 410 ?
 2-3 MNC Digits Ex 23 means 2 Digits, 023 Means 3 Digits
router#cellular 0 lte plmn select force 310 410 2 ?
  gsm   GSM
  lte   LTE
  umts  UMTS
router#cellular 0 lte plmn select force 310 410 2 l
router#cellular 0 lte plmn select force 310 410 2 lte ?
```

Verifying PLMN Selection

Use **show cellular 0 network** command to verify the PLMN selection:

```
router#show cellular 0 network
Current System Time = Fri Sep 18 18:53:25 2015
Current Service Status = Normal
Current Service = Packet switched
Current Roaming Status = Roaming
Network Selection Mode = Manual
Network = O2 - UK
Mobile Country Code (MCC) = 234
Mobile Network Code (MNC) = 10
Packet switch domain(PS) state = Attached
Location Area Code (LAC) = 4931
Cell ID = 34319
Available PLMNs:
Idx MCC MNC RAT     Desc
1   234 10  umts    O2 - UK
```

```
2   234 10  gsm     O2 - UK
3   234 20  umts    3 UK
4   234 30  umts    EE
5   234 15  gsm     voda UK
6   234 33  gsm     EE
7   234 20  lte     3 UK
8   234 30  gsm     EE
9   234 15  umts    voda UK
10  234 30  lte     EE
11  234 10  lte     O2 - UK
12  234 15  lte     voda UK
router#show cellular 0 radio
Radio power mode = ON
Channel Number = 122
Current Band = GSM 900 Extended
Current RSSI = -48 dBm
Current ECIO = -127 dBm
Radio Access Technology(RAT) Preference = GSM
Radio Access Technology(RAT) Selected = EDGE
```

Note Some networks may not allow the router to connect. In such cases, you have to choose a different network.

Note Restart your modem if the router is not able to connect to any network.

SNMP MIBs

The following Simple Management Network Protocol (SNMP) MIBs are supported on Cisco 4G LTE WWAN EHWICs, Cisco 819 Series 4G LTE ISRs and Cisco C880 Series 4G LTE ISRs and Cisco C890 Series 4G LTE Series ISRs:

- IF-MIB
- ENTITY-MIB
- CISCO-WAN-3G-MIB

For the CISCO-WAN-3G-MIB, the following tables and sub-tables are supported for 3G and LTE technologies:

- ciscoWan3gMIB(661)
- ciscoWan3gMIBNotifs(0)
- ciscoWan3gMIBObjects(1)
- c3gWanCommonTable(1)
- c3gWanGsm(3)
- c3gGsmIdentityTable(1)
- c3gGsmNetworkTable(2)
- c3gGsmPdpProfile(3)
- c3gGsmPdpProfileTable(1)
- c3gGsmPacketSessionTable(2)
- c3gGsmRadio(4)
- c3gGsmRadioTable(1)
- c3gGsmSecurity(5)
- c3gGsmSecurityTable(1)

You can download the MIBs from the Cisco MIB Locator at http://www.cisco.com/go/mibs.

How to Configure Cisco 4G LTE

Verifying Modem Signal Strength and Service Availability

For the EHWIC, the *unit* argument identifies the router slot, WIC slot, and port separated by slashes (0/0/0). For the Cisco 800 Series 4G LTE ISRs, the *unit* argument identifies slot "0" for all commands.

For 4G-LTE EHWICs, the numbering for slot 0, wic 0, and port 0 is 0/0/0 for all commands. For Cisco 800 Series 4G LTE fixed platforms, use slot "0" for all commands.

Procedure

	Command or Action	Purpose
Step 1	**show cellular** *unit* **network** **Example:** `Device# show cellular 0/0/0 network`	Displays information about the carrier network, cell site, and available service.
Step 2	**show cellular** *unit* **radio** **Example:** `Device# show cellular 0/0/0 radio`	Shows the radio signal strength. **Note** The RSSI should be better than –90 dBm for steady and reliable connection.
Step 3	**show cellular** *unit* **profile** **Example:** `Device# show cellular 0/0/0 profile`	Shows information about the modem data profiles created.
Step 4	**show cellular** *unit* **security** **Example:** `Device# show cellular 0/0/0 security`	Shows the security information for the modem, such as SIM and modem lock status.
Step 5	**show cellular** *unit* **all** **Example:** `Device# show cellular 0/0/0 all`	Shows consolidated information about the modem, profiles created, radio signal strength, network security, and so on.

Creating, Modifying, or Deleting Modem Data Profiles

Procedure

	Command or Action	Purpose
Step 1	**cellular** *unit* **lte profile** *[***create** | **delete***] profile-number [apn [authentication [username password [bearer-type]]]]* **Example:** `Device# cellular 0/0/0 lte profile create 2 apn.com pap username pwd ipv4`	Creates, modifies, or deletes a modem data profile in the privileged EXEC mode. • *profile-number* —Specifies the profile number created for the modem. • *apn*—Specifies an Access Point Name (APN) in the profile. An APN is provided by your service provider. Only a single APN can be specified in a single profile. • *authentication* —Specifies the authentication type used. Acceptable parameters are **chap**, **none** (no authentication), **pap**, and **pap_chap** (PAP or CHAP authentication). • *username password*—Provided by service provider. • *bearer-type* —Specifies **the type of data payload exchanged over the air link when the packet data session is established with this profile. Acceptable data type parameters are: ipv4**, **ipv6**, and **ipv4v6** (IPv4 and IPv6). **Note** Entering this command results in the creation or modification of both the 3GPP and 3GPP2 profiles with the same parameters for the MC7750 and MC7350 modems.

Configuring a SIM for Data Calls

Locking and Unlocking a SIM Card Using a PIN Code

Perform this task to lock or unlock a SIM card given by your service provider.

The SIM card gets blocked if the wrong PIN is entered three consecutive times. Make sure you enter the correct PIN the SIM is configured with. If your SIM card gets blocked, contact your service provider for a PUK code. Using the PUK code, you can unblock the SIM card.

Note For the EHWIC, the *unit* argument identifies the router slot, WIC slot, and port separated by slashes (0/0/0). For the Cisco 800 Series 4G LTE ISRs, the *unit* argument identifies slot “0” for all commands.

Procedure

	Command or Action	Purpose
Step 1	**cellular** *unit* **lte sim** {**lock** | **unlock**} *pin* **Example:** `Device# cellular 0/0/0 lte sim lock 1111`	Locks or unlocks the SIM card using a PIN code. • *pin*—A code (4 to 8 digits long) provided by your carrier to lock or unlock the SIM card.

Changing the PIN Code

Perform this task to change the PIN code of a SIM.

Note For the EHWIC, the *unit* argument identifies the router slot, WIC slot, and port separated by slashes (0/0/0). For the Cisco 800 Series 4G LTE ISRs, the *unit* argument identifies slot “0” for all commands.

Procedure

	Command or Action	Purpose
Step 1	**cellular** *unit* **lte sim change-pin** *pin new-pin* **Example:** `Device# cellular 0/0/0 lte sim change-pin 1111 1234`	Changes the assigned PIN code. SIM should be in locked state when the PIN is being changed.

Verifying the Security Information of a Modem

Perform this task to verify the security information of a modem.

Note For the EHWIC, the *unit* argument identifies the router slot, WIC slot, and port separated by slashes (0/0/0). For the Cisco 800 Series 4G LTE ISRs, the *unit* argument identifies slot “0” for all commands.

Procedure

	Command or Action	Purpose
Step 1	**show cellular** *unit* **security** **Example:** `Device# show cellular 0/0/0 security`	Shows the security information of the modem, including the SIM lock status.

Configuring Automatic Authentication for a Locked SIM

An unencrypted PIN can be configured to activate the Card Holder Verification (CHV1) code that authenticates a modem.

The SIM card gets blocked if the wrong PIN is entered three consecutive times. Make sure you enter the correct PIN the SIM is configured with. If your SIM card gets blocked, contact your service provider for a PUK code.

Follow these procedures when using an unencrypted Level 0 PIN to configure CHV1. For instructions on how to configure CHV1 using an encrypted Level 7 PIN, see the Configuring an Encrypted PIN for a SIM, on page 52.

A SIM should be locked for SIM authentication to work. To verify the SIM's status, use the **show cellular** *unit* **security** command.

For the EHWIC, the *unit* argument identifies the router slot, WIC slot, and port separated by slashes (0/0/0). For the Cisco 800 Series 4G LTE ISRs, the *unit* argument identifies slot "0" for all commands.

Procedure

	Command or Action	Purpose
Step 1	**configure terminal** **Example:** `Device# configure terminal`	Enters global configuration mode.
Step 2	**controller cellular** *unit* **Example:** `Device(config)# controller cellular 0/0`	Enters the cellular controller configuration mode.
Step 3	Do one of the following: **lte sim authenticate 0** *pin* **lte sim authenticate 0** *pin* **slot** {**0** | **1**} **Example:** `Device(config-controller)# lte sim authenticate 0 1111`	Authenticates the SIM CHV1 code by using an unencrypted (**0**) keyword and PIN. This PIN is sent to the modem for authentication with each subsequent LTE connection. If authentication passes based on the configured PIN, the data call is allowed. If authentication fails, the modem does not initiate the data call. • For the Cisco 4G EHWICs that do not support dual SIM feature, use the first command. • For the Cisco 800 Series 4G LTE ISRs with dual SIM feature, use the second command.

	Command or Action	Purpose
		Note This command is valid only when an unencrypted PIN is used. To configure CHV1 code using an encrypted PIN, see the Configuring an Encrypted PIN for a SIM, on page 52. The **slot** keyword and its options are only available on **Cisco 800 Series 4G LTE ISRs which supports the dual SIM feature.**

Configuring an Encrypted PIN for a SIM

To configure an encrypted PIN, the scrambled value of the PIN must be obtained. To get the scrambled Level 7 PIN and to configure the SIM CHV1 code for verification using this encrypted PIN, enter the following commands in the EXEC mode.

When obtaining the encrypted PIN for a SIM, a username and password are created by configuring password encryption, defining the username and associated password, copying the resulting scrambled password, and using this scrambled password in the SIM authentication command. After the scrambled PIN has been obtained and used in SIM authentication, the username created can be deleted from the Cisco IOS configuration.

A SIM should be locked for SIM authentication to work. To verify the SIM's status, use the **show cellular** *unit* **security** command.

For the EHWIC, the *unit* argument identifies the router slot, WIC slot, and port separated by slashes (0/0/0). For the Cisco 800 Series 4G LTE ISRs, the *unit* argument identifies slot "0" for all commands.

Procedure

	Command or Action	Purpose
Step 1	**configure terminal** **Example:** `Device# configure terminal`	Enters global configuration mode.
Step 2	**service password-encryption** **Example:** `Device(config)# service password-encryption`	Enables password encryption.
Step 3	**username** *name* **privilege 0 password** *pin* **Example:** `Device(config)# username SIM privilege 0 password 1111`	Creates username and password. • *name*—Specifies the username. • *pin*—Specifies the four- to eight-digit PIN code.

	Command or Action	Purpose
Step 4	**do show run** | **i** *name* **Example:** `Device(config)# do show run | i SIM`	Shows the username configuration line with the encrypted level 7 PIN for the username created in Step 3 (user "SIM" in the example shown). Copy the scrambled password for use in Step 6 (as the PIN).
Step 5	**controller cellular** *unit* **Example:** `Device(config)# controller cellular 0/0`	Enters the cellular controller configuration mode.
Step 6	Do one of the following: • **lte sim authenticate** {**0** | **7**} *pin* • **lte sim authenticate** {**0** | **7**} *pin* **slot** {**0** | **1**} **Example:** `Device(config-controller)# lte sim authenticate 7 055A575E70`	Authenticates the SIM CHV1 code by using the encrypted keyword 7 and the scrambled PIN from Step 4. The PIN is sent to the modem for authentication with each subsequent LTE connection. If authentication passes based on the configured PIN, the data call is allowed. If authentication fails, the modem does not initiate the data call. For Cisco 4G LTE WWAN EHWICs, use the first command. For the Cisco 819(H)G-4G-G ISR that supports dual SIM feature, use the second command. **Note** The slot keyword and its options are available only on Cisco 800 Series 4G LTE ISRs which supports the dual SIM feature.
Step 7	**exit** **Example:** `Device(config-controller)# exit`	(Optional) Exits the cellular controller configuration mode.
Step 8	**no username** *name* **Example:** `Device(config)# no username SIM`	(Optional) Removes the username and password created in Step 3.
Step 9	**no service password-encryption** **Example:** `Device(config)# no service password-encryption`	(Optional) Disables password encryption.

Applying a Modem Profile in a SIM Configuration

Procedure

	Command or Action	Purpose
Step 1	**configure terminal** **Example:** `Device# configure terminal`	Enters the global configuration mode.
Step 2	**controller cellular** *unit* **Example:** `Device(config)# controller cellular 0/0`	Enters the cellular controller configuration mode.

Step 3	Do one of the following:
	• **lte sim data-profile** *number*
	• **attach-profile** *number* **lte sim profile** *number* **attach-profile** *number* **slot {0 | 1}**
	Example:
	`Device(config-controller)# lte sim data-profile 2 attach-profile 1 slot 0`
	Example:
	`Device(config-controller)# lte sim data-profile 3 attach-profile 1 slot 1`
		(All MC77xx modems) Applies the configured profile number to the SIM and its slot number. The default (primary) slot is 0.
		• **For the Cisco 4G EHWICs that do not support dual SIM feature, use the first command.**
		• **For the Cisco 800 Series 4G LTE ISRs with dual SIM feature, use the second command.**
		• **attach profile**—profile used by the modem to attach to the LTE network.
		• **data profile**—profile used to send and receive data over the cellular network.
		Note The **slot** keyword and its options are available only on Cisco 800 Series 4G LTE ISRs **which supports the Dual SIM feature.**

Configuring a Dual SIM

Note You can manually activate a SIM using the **cellular 0 lte sim activate slot** *0 or 1* command.

Procedure

	Command or Action	Purpose
Step 1	**configure terminal** **Example:** `Device# configure terminal`	Enters the global configuration mode.

	Command or Action	Purpose
Step 2	**controller cellular** *unit* **Example:** `Device(config)# controller cellular 0/0`	Enters the cellular controller configuration mode.
Step 3	**lte sim primary** *slot* **Example:** `Device(config-controller)# lte sim primary 1`	(Optional) Enters either slot number 0 or 1 of the primary SIM.
Step 4	**lte sim max-retry** *number* **Example:** `Device(config-controller)# lte sim max-retry 20`	(Optional) Specifies the maximum number of failover retries from 1 to 65535. The default value is 10.
Step 5	**lte failovertimer** *timeout-period* **Example:** `Device(config-controller)# lte failovertimer 6`	(Optional) By default, the failover time period is 2 minutes before the primary SIM switches over to the secondary SIM if service becomes unavailable. Specify a failover timeout value between 1 and 7 minutes before a switchover occurs.

Step 6	**lte sim data-profile** *number* **attach-profile** *number* **slot {0 | 1}**
	Example:
	`Device(config-controller)# lte sim data-profile 2 attach-profile 1 slot 0`
	Example:
	`Device(config-controller)# lte sim data-profile 2 attach-profile 1 slot 1`
		Applies the configured profile number to the SIM and its slot number. The default (primary) slot is 0.
		You must also identify the primary and secondary SIM for the configured profile when two SIMs are presented.

Data Call Setup

The following figure shows a typical data call setup.

Figure 6: Data Call Setup with EHWIC-4G-LTE

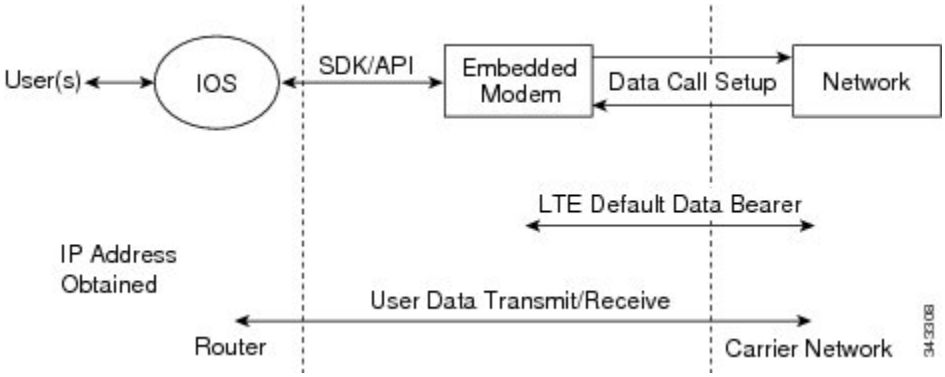

To set up a data call, use the following procedures:

Configuring the Cellular Interface

To configure the cellular interface, enter the following commands starting in EXEC mode.

Note For the EHWIC, the *unit* argument identifies the router slot, WIC slot, and port separated by slashes (0/0/0). For the Cisco 800 Series 4G LTE ISRs, the *unit* argument identifies slot "0" for all commands.

Note Starting from Cisco IOS Release 15.3(3)M and 15.3(1)T, the chat-script configuration, including dialer in-band, dialer string, and script dialer, is auto-generated based on the modem type plugged in. The 3G and 4G EHWIC SKUs and the fixed 3G and 4G routers support these configuration changes.

Procedure

	Command or Action	Purpose
Step 1	**configure terminal** **Example:** `Device# configure terminal`	Enters global configuration mode.
Step 2	**interface cellular** unit **Example:** `Device(config)# interface cellular 0/0/0`	Specifies the cellular interface.
Step 3	**ip address negotiated** **Example:** `Device(config-if)# ip address negotiated`	Specifies that the IP address for a particular interface is dynamically obtained.
Step 4	**encapsulation slip** **Example:** `Device(config-if)# encapsulation slip`	Specifies Serial Line Internet Protocol (SLIP) encapsulation for an interface configured for dedicated asynchronous mode or dial-on-demand routing (DDR). This is the default for asynchronous interfaces.
Step 5	**dialer in-band** **Example:** `Device(config-if)# dialer in-band`	Enables DDR and configures the specified serial interface to use in-band dialing.
Step 6	**dialer string** string **Example:**	Specifies the number or string to dial.

	Command or Action	Purpose
	`Device(config-if)# dialer string lte`	
Step 7	**dialer-group** group-number **Example:** `Device(config-if)# dialer-group 1`	Specifies the number of the dialer access group to which the specific interface belongs.
Step 8	**exit** **Example:** `Device(config-if)# exit`	Enters the global configuration mode.
Step 9	chat-script script-name "" "**AT!CALL**" TIMEOUT timeout-value "**OK**" **Example:** `Device(config)# chat-script lte"" "AT!CALL" TIMEOUT 60 "OK"`	Defines the ATDT commands when the dialer is initiated.
Step 10	**ip route** *network-number network-mask* {*ip-address* | *interface*} [*administrative distance*] [**name** *name*] **Example:** `Device(config)# ip route 209.165.200.225 255.255.255.224 cellular 0/0/0`	Establishes a floating static route with the configured administrative distance through the specified interface. **Note** A higher administrative distance should be configured for the route through the backup interface so that it is used only when the primary interface is down.
Step 11	**dialer-list** dialer-group **protocol** protocol-name {**permit** | **deny** | **list** *access-list-number* | **access-group**} **Example:** `Device(config)# dialer-list 1 protocol ip list 1`	Creates a dialer list for traffic of interest and permits access to an entire protocol.
Step 12	**line** unit **Example:** `Device(config)# line 0/0/0`	Specifies the line configuration mode.
Step 13	**script dialer** *regular-expression* **Example:** `Device(config-line)# script dialer lte`	Specifies a default modem chat script.

What to do next

Note If a tunnel interface is configured with **ip unnumbered cellular 0/0/0**, it is necessary to configure the actual static IP address under the cellular interface, in place of ip address negotiated.

Configuring DDR

To configure DDR for the cellular interface, enter the following commands starting in EXEC mode.

Note For the EHWIC, the *unit* argument identifies the router slot, WIC slot, and port separated by slashes (0/0/0). For the Cisco 800 Series 4G LTE ISRs, the *unit* argument identifies slot "0" for all commands.

Procedure

	Command or Action	Purpose
Step 1	**configure terminal** **Example:** `Device# configure terminal`	Enters global configuration mode.
Step 2	**interface cellular** *unit* **Example:** `Device(config)# interface cellular 0/0/0`	Specifies the cellular interface.
Step 3	**ip address negotiated** **Example:** `Device(config-if)# ip address negotiated` **Example:**	Specifies that the IP address for a particular interface is dynamically obtained.
Step 4	**encapsulation slip** **Example:** `Device(config-if)# encapsulation slip`	Specifies Serial Line Internet Protocol (SLIP) encapsulation for an interface configured for dedicated asynchronous mode or dial-on-demand routing (DDR). This is the default for asynchronous interfaces.
Step 5	**dialer in-band** **Example:** `Device(config-if)# dialer in-band`	Enables DDR and configures the specified serial interface to use in-band dialing.

	Command or Action	Purpose
Step 6	**dialer pool-member** *number* **Example:** `Device(config-if)# dialer pool-member 1`	Specifies the number of a dialer profile's dialing pool to which the specific interface belongs.
Step 7	**interface dialer** *number* **Example:** `Device(config-if)# interface dialer 1`	Specifies the number of a dialer rotary group to which the specific interface belongs.
Step 8	**ip address negotiated** **Example:** `Device(config-if)# ip address negotiated`	Specifies that the IP address for a particular interface is dynamically obtained.
Step 9	**encapsulation slip** **Example:** `Device(config-if)# encapsulation slip`	Specifies Serial Line Internet Protocol (SLIP) encapsulation for an interface configured for dedicated asynchronous mode or dial-on-demand routing (DDR). This is the default for asynchronous interfaces.
Step 10	**dialer pool** *number* **Example:** `Device(config-if)# dialer pool 1`	Specifies the number of a dialing pool that the dialer interface can use to connect to a specific destination subnetwork.
Step 11	**dialer idle-timeout** *seconds* **Example:** `Device(config-if)# dialer idle-timeout 30`	Specifies the duration of idle time, in seconds, after which a line will be disconnected.
Step 12	**dialer string** *string* **Example:** `Device(config-if)# dialer string lte`	Specifies the number or string to dial.
Step 13	**dialer-group** *group-number* **Example:** `Device(config-if)# dialer-group 1`	Specifies the number of the dialer access group to which the specific interface belongs.
Step 14	**exit** **Example:** `Device(config-if)# exit`	Enters the global configuration mode.

	Command or Action	Purpose
Step 15	**dialer-list** *dialer-group* **protocol** *protocol-name* {**permit** | **deny** | **list** *access-list-number* | **access-group**} **Example:** `Device(config)# dialer-list 1 protocol ip list 1`	Creates a dialer list for traffic of interest and permits access to an entire protocol.
Step 16	**access-list** *access-list-number* **permit** *ip-source-address* **Example:** `Device(config)# access-list 1 permit any`	Defines traffic of interest.
Step 17	**line** *unit* **Example:** `Device(config)# line 0/0/0`	Specifies the line configuration mode.
Step 18	**script dialer** *regular-expression* **Example:** `Device(config-line)# script dialer lte`	Specifies a default modem chat script.
Step 19	**exit** **Example:** `Device(config-line)# exit`	Exits line configuration mode.
Step 20	chat-script script-name "" "**AT!CALL**" TIMEOUT timeout-value "**OK**" **Example:** `Device(config)# chat-script lte"" "AT!CALL" TIMEOUT 60 "OK"`	Defines the ATDT commands when the dialer is initiated.

Configuring DDR Backup

To monitor the primary connection and initiate the backup connection when needed, the router can use one of the following methods:

- Backup Interface—The backup interface that stays in standby mode until the primary interface line protocol is detected as down and then is brought up.
- Floating Static Route—The route through the backup interface has an administrative distance that is greater than the administrative distance of the primary connection route and therefore would not be in the routing table until the primary interface goes down.
- Dialer Watch—Dialer watch is a backup feature that integrates dial backup with routing capabilities.

Configuring Interfaces to Use a Backup Interface

Note You cannot configure a backup interface for the cellular interface and any other asynchronous serial interface.

To configure one or more interfaces to use a backup interface, use the following commands, beginning in global configuration mode.

Procedure

	Command or Action	Purpose
Step 1	interface *type number* **Example:** `Device(config)# interface atm 0/0/0`	Specifies the interface to be backed up and begins interface configuration mode.
Step 2	**backup interface cellular** *number* **Example:** `Device(config-if)# backup interface cellular 0/0/0`	Specifies the cellular interface as backup.
Step 3	**backup delay** *enable-delay-period disable-delay-period* **Example:** `Device(config-if)# backup delay 0 10`	Specifies delay between the physical interface going down and the backup interface being enabled and between the physical interface coming back up and the backup being disabled.

Enabling 4G GPS and NMEA Data Streaming

GPS NMEA data streaming to external NMEA 2.0-compliant GPS plotter applications can be enabled on Cisco 4G LTE EHWICs, Cisco 819 Series 4G LTE ISRs, Cisco C880 Series 4G LTE ISRs, and Cisco C890 Series 4G LTE ISRs.

Note For an EHWIC, the *unit* argument identifies the router slot, WIC slot, and the port, and is separated by slashes (0/0/0). For the Cisco 800 Series 4G LTE ISRs, the *unit* argument identifies slot 0 for all commands.

Procedure

Step 1 **configure terminal**

Example:

```
Device# configure terminal
```

Enters the configuration mode.

Step 2 **controller cellular** *unit*

Example:

```
Device(config)# controller cellular 0
```

Enters the controller cellular configuration mode.

Step 3 **lte gps enable**

Example:

```
Device(config-controller)# lte gps enable
```

(Optional) GPS is enabled by default. Use this command to enable the GPS feature if GPS has been disabled for any reason.

Step 4 **lte gps mode standalone**

Example:

```
Device(config-controller)# lte gps mode standalone
```

Enables the standalone GPS mode.

Step 5 Do one of the following:

- **lte gps nmea** {**ip** | **serial** [*streaming*]}
- **lte gps nmea**

Example:

```
Device(config-controller)# lte gps nmea ip
```

Enables NMEA streaming. Cisco 4G LTE EHWICs support only IP NMEA streaming. Therefore, IP interface and serial interface options are unavailable. Cisco 819 4G LTE ISRs, Cisco C880 Series 4G LTE ISRs, and Cisco C890 Series 4G LTE ISRs support the following NMEA streaming options:

- **ip**—NMEA over IP interface.
- **serial**—NMEA over serial interface.
- *streaming*—Parameters are: **38400** (bps baud rate), **4800** (bps baud rate, which is the default) **line-config** (use tty line configuration).

Note Effective with Cisco IOS release 15.4(3)T, the **lte gps nmea serial ip** command is available on Cisco 800 series routers with serial interfaces only.

Step 6 **end**

Example:

```
Device(config-controller)# end
```

Exits the controller configuration mode and returns to the privileged EXEC mode.

Step 7 **show cellular** *unit* **gps**

Example:

```
Device# show cellular 0/0/0 gps

GPS Info
-------------
```

```
GPS Feature: enabled
GPS Port Selected: DIV port
GPS State: GPS enabled
GPS Mode Configured: standalone
Last Location Fix Error: Offline [0x0]
GPS Error Count: 13
Latitude: 37 Deg 24 Min 58 Sec North
Longitude: 121 Deg 55 Min 7 Sec West
Timestamp (GMT): Thu Aug 15 14:23:35 2013

Fix type index: 0, Height: 15 m
```

Displays a summary of the following GPS data:

- GPS state information (GPS disabled, GPS acquiring, GPS enabled)
- GPS mode configured (standalone)
- GPS location and timestamp information
- GPS satellite information
- GPS feature (enabled or disabled)
- GPS port selected (Dedicated GPS and GPS port with voltage-no-bias)

Step 8 **show cellular unit gps detail**

Example:

```
Device# show cellular 0 gps detail

GPS Info
-------------
GPS Feature: enabled
GPS Port Selected: DIV port
GPS State: GPS enabled
GPS Mode Configured: standalone
Last Location Fix Error: Offline [0x0]
GPS Error Count: 71
Latitude: 37 Deg 24 Min 58 Sec North
Longitude: 121 Deg 55 Min 7 Sec West
Timestamp (GMT): Fri Aug 16 10:46:25 2013

Fix type index: 0, Height: 20 m
HDOP: 0.8, GPS Mode Used: standalone

Satellite Info
----------------
Satellite #1, elevation 18, azimuth 52, SNR 30 *
Satellite #4, elevation 13, azimuth 165, SNR 29 *
Satellite #7, elevation 3, azimuth 133, SNR 22
Satellite #8, elevation 33, azimuth 126, SNR 29 *
Satellite #9, elevation 33, azimuth 133, SNR 0 *
Satellite #11, elevation 4, azimuth 39, SNR 0
Satellite #15, elevation 29, azimuth 284, SNR 0 *
Satellite #17, elevation 84, azimuth 118, SNR 0 *
Satellite #26, elevation 38, azimuth 224, SNR 0
```

Displays detailed GPS data.

Step 9 **show running config**

Example:

```
Device# show running config

!
controller Cellular 0
```

```
 lte gps mode standalone
 lte gps nmea ip
!
```

Shows the output of the configuration.

Step 10 **show line**

Example:

```
Device# show line

Tty Typ     Tx/Rx    A Modem  Roty AccO AccI   Uses   Noise  Overruns   Int
*     0 CTY              -    -      -    -    -      0       0     0/0       -
      1 AUX      0/0     -    -      -    -    -      0       0     0/0       -
      2 TTY   9600/9600  -    -      -    -    -      0       0     0/0       -
I     3 TTY              - inout     -    -    -      0       0     0/0     Ce0
I     6 TTY              - inout     -    -    -      0   24101     0/0     NM0/0/5
     10 VTY              -    -      -    -    -      0       0     0/0       -
     11 VTY              -    -      -    -    -      0       0     0/0       -
     12 VTY              -    -      -    -    -      0       0     0/0       -
     13 VTY              -    -      -    -    -      0       0     0/0       -
     14 VTY              -    -      -    -    -      0       0     0/0       -

Line(s) not in async mode -or- with no hardware support:
4-5, 7-9
```

Shows the async port number.

After NMEA is configured, Cisco IOS creates a n NMEA async port. The port number is platform dependent. In this example, the async port number is line 6.

Step 11 **telnet** *ip address port*

Example:

```
Device# telnet 10.1.1.1 2006

Trying 10.1.1.1, 2006 ... Open
$GPRMC,,V,,,,,,,,,,N*53
$GPGSV,3,1,11,01,17,049,34,04,16,164,30,08,29,129,32,09,29,136,38*70
$GPGSV,3,2,11,15,29,281,37,17,83,073,36,28,,,41,07,00,135,*4B
$GPGSV,3,3,11,11,01,037,,12,00,272,,24,18,313,*46
$GLGSV,2,1,08,78,23,323,27,86,25,030,27,77,67,014,25,76,37,112,32*6D
$GLGSV,2,2,08,88,39,203,32,87,81,070,31,68,01,292,34,69,,,*5A
$GPGGA,185555.0,3724.984762,N,12155.122163,W,1,04,13.3,23.2,M,-27.0,M,,*6A
$PQXFI,185555.0,3724.984762,N,12155.122163,W,23.2,264.53,176.14,9.08*46
$GNGNS,185555.0,3724.984762,N,12155.122163,W,AN,04,13.3,23.2,-27.0,,*51
$GPVTG,,T,,M,,N,,K,N*2C
$GPRMC,185555.0,A,3724.984762,N,12155.122163,W,,,160813,,,A*7B
$GPGSA,A,3,08,09,15,17,,,,,,,,,16.2,13.3,9.2*3E
$GNGSA,A,3,08,09,15,17,,,,,,,,,16.2,13.3,9.2*20
$GNGSA,A,3,,,,,,,,,,,,,16.2,13.3,9.2*23
```

After NMEA streaming is enabled, the modem starts to stream NMEA data over the NMEA port regardless of whether the GPS fix is acquired or not. You can reverse Telnet to the NMEA port to check the NMEA data.

Configuring 4G SMS Messaging

Note In the context of an EHWIC, the *unit* argument identifies the router slot, WIC slot, and the port, and is separated by slashes (0/0/0). For the Cisco 1110 Series 4G LTE routers, the *unit* argument identifies slot 0 for all commands.

Procedure

Step 1 **configure terminal**

Example:

```
Device# configure terminal
```

Enters the configuration mode.

Step 2 **controller cellular** *unit*

Example:

```
Device(config)# controller cellular 0/1/0
```

Enters the controller cellular configuration mode.

Step 3 **lte sms archive path** *FTP-URL*

Example:

```
Device(config-controller)# lte sms archive path ftp://username:password@172.25.211.175/SMS-LTE
```

Specifies an FTP server folder path to send all the incoming and outgoing SMS messages.

- After the folder path is identified, it is appended automatically with outbox and inbox folders for the path to which SMS messages are sent and received, for example:
  - **ftp://172.25.211.175/SMS-LTE/outbox**
  - **ftp://172.25.211.175/SMS-LTE/inbox**

Step 4 **cellular** *unit* **lte sms view** {**all** | *ID* | **summary**}

Example:

```
Device# cellular 0/0/0 lte sms view summary

ID   FROM                 YY/MM/DD HR:MN:SC  SIZE  CONTENT
0    4442235525           12/05/29 10:50:13  137   Your entry last month has...
2    5553337777           13/08/01 10:24:56  5     First
3    5553337777           13/08/01 10:25:02  6     Second
```

Displays the message contents of incoming texts received by a modem.

- **all**—Displays the message contents of up to 255 incoming text messages received by the modem.
- *ID*—Displays the message contents for a specified ID (0-255) of an incoming text message.
- **summary**—Displays a summary of the incoming text messages received by the modem.

Step 5 **end**

Example:

```
Device(config)# end
```

Exits the configuration mode and returns to the privileged EXEC mode.

Step 6 **show cellular** *unit* **sms**

Example:

```
Device# show cellular 0/0/0 sms

Incoming Message Information
----------------------------
SMS stored in modem = 20
SMS archived since booting up = 0
Total SMS deleted since booting up = 0
Storage records allocated = 25
Storage records used = 20
Number of callbacks triggered by SMS = 0
Number of successful archive since booting up = 0
Number of failed archive since booting up = 0

Outgoing Message Information
----------------------------
Total SMS sent successfully = 0
Total SMS send failure = 0
Number of outgoing SMS pending = 0
Number of successful archive since booting up = 0
Number of failed archive since booting up = 0
Last Outgoing SMS Status = SUCCESS
Copy-to-SIM Status =     0x0
Send-to-Network Status = 0x0
 Report-Outgoing-Message-Number:
  Reference Number =     0
  Result Code =          0x0
  Diag Code =            0x0 0x0 0x0 0x0 0x0

SMS Archive URL = ftp://lab:lab@1.3.150.1/outbox
```

Displays all the information in the text messages sent and received. Message information includes text messages sent successfully, received, archived, and messages pending to be sent. LTE-specific information on errors in case of a FAILED attempt may also be displayed.

Step 7 **cellular** *unit* **lte sms send** *number*

Example:

```
Device# cellular 0/1/0 lte sms send 15554443333
```

Enables a user to send a 4G LTE band SMS message to other valid recipients, provided they have a text message plan. The *number* argument is the telephone number of the SMS message recipient.

Note 10-digit or 11-digit (phone) numbers are the proper numerical format for sending a text. For example, ########## or 1##########. Seven digits are not supported.

Step 8 **cellular** *unit* **lte sms delete** [**all** | *id*]

Example:

```
Device# cellular 0/1/0 lte sms delete all
```

(Optional) Deletes one message ID or all of the stored messages from memory.

Configuring Cellular Modem Link Recovery

The cellular modem link recovery feature is enabled by default and it is recommended to enable the link recovery feature. Perform the following steps to disable or enable cellular modem link recovery if required.

Procedure

	Command or Action	Purpose
Step 1	**configure terminal** **Example:** `Device# configure terminal`	Enters the configuration mode.
Step 2	**controller cellular** *unit* **Example:** `Device(config)# controller cellular 0/1/0`	Enters the controller cellular configuration mode.

Step 3	Do one of the following:
	• **lte modem link-recovery disable**
	• **no lte modem link-recovery link-recovery disable**
	Example:
	`Device(config-controller)# lte modem link-recovery disable`
	Example:
	`Device(config-controller)# no lte modem link-recovery disable`
		Disables or enables the cellular modem link recovery feature.

Step 4	**end** **Example:** `Device(config)# end`	Exits the configuration mode and returns to the privileged EXEC mode.

Verifying the Cellular Modem Link Recovery Configuration

To determine if the cellular modem link recovery is enabled, use the **show controller cellular** *unit* command. In this example, the cellular modem link recovery feature related information is highlighted.

```
Device# show controller cellular 0/1/0
Interface Cellular0/1/0
 4G WWAN EHWIC - Global Multimode(Australia) LTE/DC-HSPA+/HSPA+/HSPA/UMTS/EDGE/G unit 0


 EHWIC Cellular Modem Configuration
 ==================================
 Modem is recognized as valid for this EHWIC
 manufacture id:  0x00001199     product id: 0x000068C0
 Sierra Wireless Direct IP MC7304 modem
```

```
GPS Feature: disabled
GPS Status: GPS mode or nmea not enabled
GPS Port selected: Dedicated GPS port

Modem Management Statistics
---------------------------
Modem resets = 2
Modem user initiated resets = 0
Modem user initiated power-cycles = 1
Modem timeouts = 0
Link recovery is ON
Registration check is ON
RSSI threshold value is -110 dBm
Monitor Timer value is 20 seconds
Wait Timer value is 10 seconds
Debounce Count value is 6
```

Upgrading the Modem Firmware for MC77XX Modem

The following table describes the Sierra Wireless modems that are supported on Cisco 4G LTE EHWICs and Cisco 1110 Series routers. The firmware for the modem is upgradable using Cisco IOS commands. The firmware is a Crossword Express (cwe) file and can be downloaded from the wireless software download page on Cisco.com.

Note The firmware upgrade procedure explained here is applicable only to MC77xx modems. The procedure for MC73xx modem is explained here:
http://www.cisco.com/c/en/us/td/docs/routers/access/interfaces/firmware/Firmware_Upgrade.html

Table 7: Modem SKUs and Associated Firmware

SKU	Modem	Firmware	Release
EHWIC-4G-LTE-A <SKU name for Cisco 1110> <SKU name for Cisco 1110>	MC7700	3.5.29.02	Cisco 16.5.1 or Later

Use only Cisco certified firmware. Using a firmware version not certified by Cisco may impact the wireless service provider network adversely.

Note Do not disconnect power or switch the router off during the firmware upgrade process. This may result in permanent modem failure.

Note Firmware downgrade is not supported.

Note The 3.5.x firmware must have a 15.2(4)M3 or later software image.

Upgrading the Modem Firmware Manually for MC77XX Modem

Downloading the Firmware

Cisco recommends the manual upgrade process for the LTE modem firmware and IOS software image for all new deployments and the following existing deployments:

- LTE is not the primary ISR WAN interface.
- LTE is not the only ISR WAN interface.
- The network administrator has out-of-band or local access to the ISR.

You can also remotely download firmware by using the following steps.

Procedure

Step 1 Go to Cisco web page http://software.cisco.com/download/navigator.html and select firmware for Cisco 4G to download the latest certified firmware for your carrier.

Note This website is only available to registered Cisco.com users. For remote download, you can transfer this using the 4G wireless link from Cisco.com onto flash. You configure external dialer and dialer persistent to bring the interface and the dialer up again.

Step 2 On this page, navigate as follows: **Products** -> **Cisco Interfaces and Modules** -> **Cisco High-Speed WAN Interface Cards**

A list of available cards displays in the third column as shown in the following figure. Select your product in the third column and download the appropriate LTE firmware. After clicking on the **Cisco High-Speed WAN interface Cards** selection, a list of available cards displays in the third column as shown in the following figure ().

Figure 7: Cisco Download Software Web Page

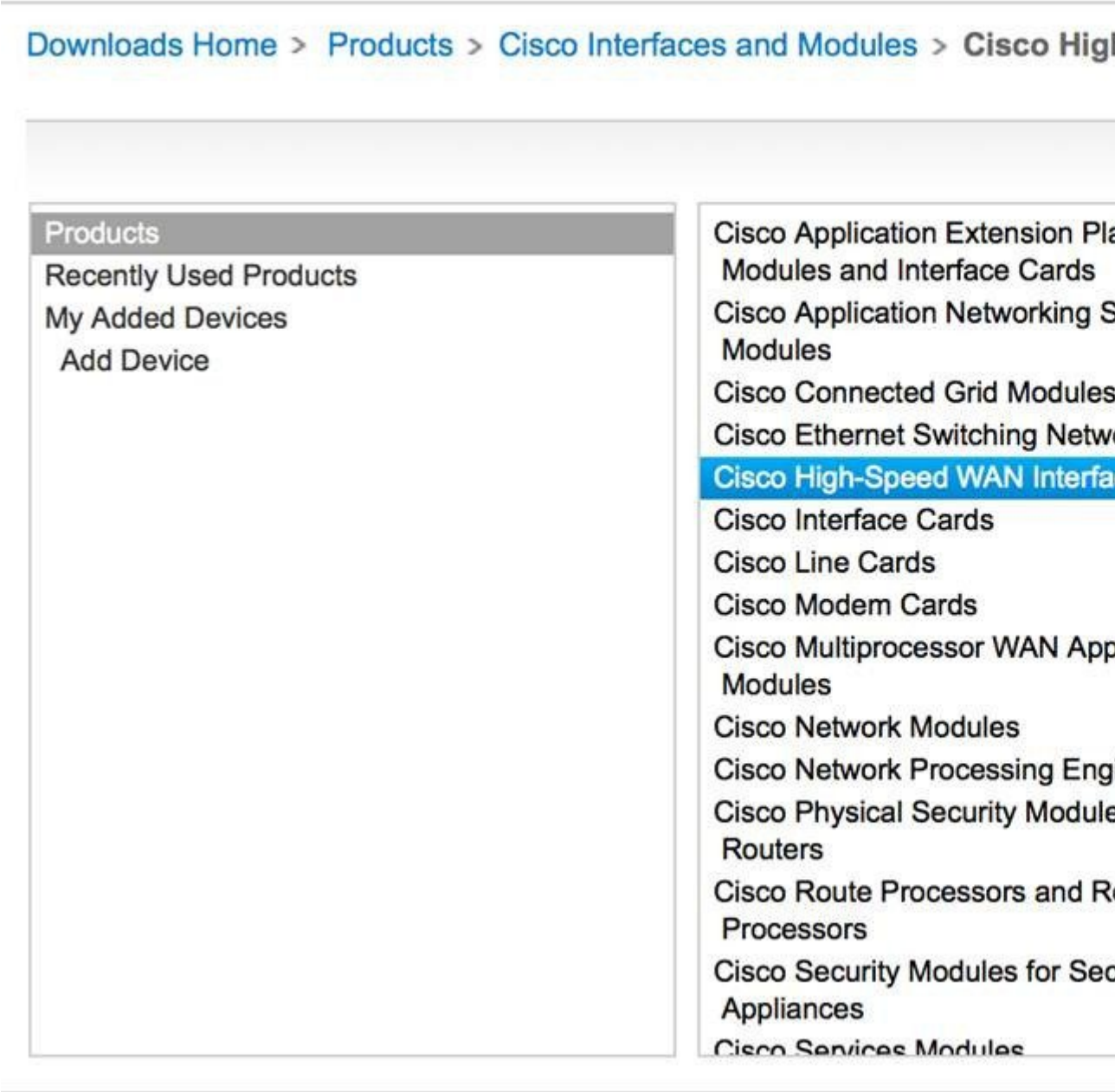

Step 3 Select your product in the third column and download the appropriate LTE firmware to the flash memory on the router.

Step 4 Enable the logging console.

Step 5 Initiate the firmware upgrade process.

Note For remote downloads, if wireless is your primary link, you lose connectivity. Connectivity is restored after the download. If you have opted for logging in Step 5, the firmware log file is available on flash with the download status.

Step 6 Verify the upgrade process.

Step 7 Reload the ISR to complete the upgrade process.

Upgrading the Firmware on the Router

Procedure

	Command or Action	Purpose
Step 1	**terminal monitor** **Example:** `Device# terminal monitor`	Enables the logging console in privileged EXEC mode.

Step 2	**microcode reload cellular** *pa-bay slot* **modem-provision flash:***filename*
	Example:
	`Device# microcode reload cellular 0 1 modem-provision flash:filename.cwe`
	Example:
	Example:
	`F/W Upgrade: Complete Successfully`
		Initiates the firmware upgrade process.
		• pa-bay—Use 0 for EHWIC and Cisco 819, 880 and 890 Series ISR.
		• slot—For EHWIC, slot number, 0 to 3, where the EHWIC is plugged in. For Cisco 819, 880, and 890 4G LTE Series ISR, use 0.
		Note For remote download, you can transfer this using the wireless link from Cisco.com onto flash. You must configure external dialer and dialer persistent to bring the interface and the dialer up again prior to the upgrade.

Step 3	**show cellular** *unit* **show cellular** 0 **hardware**
	Example:
	`Device# show cellular 0 hardware`
	Example:
	`Modem Firmware Version = SWI9200X_03.05.10.02`
	Example:
	`Modem Firmware built = 2012/02/25 11:58:38`
		Verifies the firmware upgrade process. The first command pertains to **Cisco 4G LTE EHWIC and the second command pertains to** Cisco 819 Series 4G LTE ISRs, Cisco C880 Series 4G LTE ISRs, and Cisco C890 Series 4G LTE ISRs.

Step 4	**reload**	Reloads the IOS application software image to complete the firmware upgrade. **Note** Ensure that you are reloading an IOS software image that is 15.2(4)M3 or later.

Upgrading the Modem Firmware Using the EEM Scripts

For existing field deployments where LTE is the only WAN interface, and there is no local or out-of-band administrative access to the router, an automated upgrade method using a Cisco IOS Embedded Event Manager (EEM) script is recommended. The EEM script upgrades the modem firmware and reloads the router with the IOS software image that is compatible with the new firmware release.

Downloading the Modem Firmware and Installing the EEM Scripts

Procedure

	Command or Action	Purpose
Step 1	Go to the Cisco Wireless WAN software download website at: http://software.cisco.com/download/navigator.html.	Provides access to Cisco Wireless WAN software downloads. Select firmware for Cisco 4G. **Note** This website is only available to registered Cisco.com users.
Step 2	On this page, select from the following options:**Products** -> **Cisco Interfaces and Modules** -> **Cisco High-Speed WAN Interface Cards**	After the **Cisco High-Speed WAN interface Cards** is selected, a list of available cards displays in the third column. Select your product in the third column and download the appropriate LTE firmware.
Step 3	Download the selected LTE firmware release.	Download the modem firmware file to flash memory on the router.
Step 4	**no boot system flash:***filename* **Example:** `Device(config)# no boot system flash:cxxx-universalk9-mz.SPA.152-4.M2`	Deletes any **boot system flash:** commands from the running configuration in global configuration mode.
Step 5	**terminal monitor** **Example:** `Device# terminal monitor`	Enables the logging console in privileged EXEC mode.
Step 6	**configure terminal** **Example:** `Device# configure terminal`	Enters global configuration mode.
Step 7	Copy EEM Script 1 and EEM Script 2 for your modem (see the following this section) and paste this text into the router's running configuration.	Installs the EEM scripts on the router. **Note** The EEM script is written assuming that the ISR is initially running the IOS interim image for LTE. If the router is running IOS 15.2(4)M2, replace the following line in the script before executing:

	Command or Action	Purpose

		`action 1.3.4 set old_IOS "c$platform-universalk9-mz.SSA.V152_4_M_LTE"`
		with:
		`action 1.3.4 set old_IOS "c$platform-universalk9-mz.SPA.152-4.M2"`

Step 8	**show event manager policy registered** **Example:** `Device# show event manager policy registered`	Verifies that the policy is registered. **Note** Ensure that every line of the script has registered properly.

Running the EEM Scripts on the Router to Upgrade the Modem

Procedure

	Command or Action	Purpose
Step 1	**event manager run fw** *slot-number* **Example:** `Device# event manager run fw 1`	Identifies the EHWIC-4G-LTE **slot number.** **Note** For 800 Series 4G LTE ISR platforms, the slot number is **0**. For the 1900, 2900, or 3900 platforms with EHWICs, the slot number identifies the ISR slot where EHWIC-4G-LTE is inserted.

Step 2	**show cellular** *slot* **hardware**
	Example:
	`Device# show cellular 0 hardware`
	Example:
	`Modem Firmware Version = SWI9200X_03.05.10.02`
	Example:
	`Modem Firmware built = 2012/02/25 11:58:38`
		Verifies that the upgrade was successful. If the upgrade was successful, a message similar to the one shown in the example should appear.

Removing EEM Scripts from the Router once the Modem Upgrades Successfully

Procedure

	Command or Action	Purpose
Step 1	**configure terminal** **Example:** `Device# configure terminal`	Enters global configuration mode.

Step 2	**no event manager applet** *applet-name*
	Example:
	`Device(config)# no event manager applet FW`
	Example:
	`Device(config)# no event manager applet router_reload`
		Deregisters the applet with the Embedded Event Manager (EEM) and enters applet configuration mode for this applet.

Step 3	**end** **Example:** `Device(config)# end`	Exits global configuration mode and enters privileged EXEC mode.
Step 4	**write memory** **Example:** `Device# write memory` **Example:**	Saves the running configuration to NVRAM on the ISR.

Upgrading the Modem Firmware Manually for MC7430 Modem

For MC74XX modems and the later versions, firmware will be provided as three separate files. The three files are firmware file with .cwe extension, carrier provisioning file (PRI) with .nvu extension, and Cisco (OEM) PRI file with .nvu extension. The supported Cisco IOS software for this firmware upgrade procedure is <release number?> and later versions.

Three types of firmware upgrades are possible depending on the requirements.

- Upgrading firmware file and carrier PRI file.
- Upgrading only the carrier provisioning file used to switch from one carrier to other.
- Upgrading only the Cisco OEM PRI file which is used to upgrade from the old Cisco OEM PRI file to the new Cisco OEM PRI file.

You should download only the required files for each firmware upgrade procedure. As part of the firmware upgrade, you need to create a directory in the router flash. The directory should contain only the required files

for the specific firmware upgrade procedure. For example, if you are upgrading only the carrier provisioning file, the directory should only contain the carrier provisioning file.

Note You should always execute the firmware upgrade command from flash. If you execute the firmware upgrade command inside a directory or folder the firmware upgrade may fail.

Note You should reload the router after the modem firmware upgrade.

Note When you create a directory in the flash for firmware upgrade, you shouldn't create any subdirectories under the directory.

Upgrading Firmware File and Carrier PRI file

Perform the following steps to manually upgrade the firmware file and carrier PRI file for MC7430 modem.

Procedure

Step 1 Go to the Cisco web page http://software.cisco.com/download/navigator.html to download the latest certified firmware for your carrier which can be found under the path: **Products -> Cisco Interfaces and Modules -> LTE Wireless WAN Interfaces**

Step 2 Download the firmware files to the router flash over Ethernet or cellular or any other WAN interface. This can be done by hosting the firmware files on a FTP or TFTP server and reaching to that server via any WAN interface on the router.

Step 3 Create a directory in the flash.

Example:

```
Router# mkdir Package_02.14.03.00_Telstra_002.013_000
Create directory filename [Package_02.14.03.00_Telstra_002.013_000] Y?
Created dir flash:/Package_02.14.03.00_Telstra_002.013_000
```

Step 4 Copy the firmware files to the created directory in the flash. Before you copy the firmware, make sure that the files are available in a TFTP server.

Example:

```
Router# copy tftp flash:/Package_02.14.03.00_Telstra_002.013_000
```

Step 5 Ensure that the firmware file (CWE) and carrier PRI file (NVU) have the same version and both files are available under the same directory.

Example:

```
Router# dir flash:Package_02.14.03.00_Telstra_002.013_000
Directory of flash:/Package_02.14.03.00_Telstra_002.013_000/
25 -rw- 5942 Apr 22 2016 18:11:48 +00:00
```

```
7430_02.14.03.00
_Telstra_002.013_000.nvu
26 -rw- 64316979 Apr 22 2016 18:15:52 +00:00 74XX_02.14.03.00
.cwe
```

Note For example, *74XX_02.14.03.00.cwe* and *7430_02.14.03 _TELSTRA_001.nvu* is a valid combination, but *74XX_02.14.03.00.cwe* and *7430_02.08.02.000_TELSTRA_001.nvu* is not a valid combination. Similarly, *74XX_02.14.03.00.cwe* and *7430_02.14.03 _GENERIC_001.nvu* is also a valid combination

Step 6 Initiate the firmware upgrade process using the **microcode reload cellular** command. When you use this command, provide the directory name instead of firmware file name.

For EHWIC-LTE-LA, EHWIC-LTE-JN, and EHWIC-LTE-CI

Example:

```
Router# microcode reload cellular 0
slot_number
 modem-provision flash:/
directory
For C898EAG-LTE-LA-K9, C897VAG-LTE-LA-K9, C899G-LTE-LA-K9, C819G-LTE-LA-K9
Router# microcode reload cellular 0 0 modem-provision flash:/
directory
```

For C819GW-LTE-LA-CK9, C819GW-LTE-LA-QK9, C819GW-LTE-LA-NK9

Example:

```
Router# microcode reload cellular 0 lte modem-provision flash:/
directory
```

Step 7 Once the firmware upgrade begins, wait for a few minutes. The firmware upgrade may take upto 7 minutes. The following message will be displayed if the firmware upgrade is successful.

For EHWIC-LTE-LA, EHWIC-LTE-JN, EHWIC-LTE-CI, C898EAG-LTE-LA-K9, and C897VAG-LTE-LA-K9, C899G-LTE-LA-K9, C819G-LTE-LA-K9

Example:

```
F/W Upgrade: Firmware Upgrade has Completed Successfully
```

For C819GW-LTE-LA-CK9, C819GW-LTE-LA-QK9, C819GW-LTE-LA-NK9

Example:

```
Firmware download successful!
Please wait for the modem to come up, this may take few minutes.
```

Step 8 Once the message indicates a successful upgrade, wait for 2 minutes till modem comes up.

Step 9 After the firmware upgrade, reload the router and verify that you have the latest firmware.

Example:

```
Router# show cellular 0 hardware
Modem Firmware Version = SWI9X30C_02.14.03.00
Modem Firmware built = 2016/03/28 14:34:14
Hardware Version = 0.2
Device Model ID: MC7430
International Mobile Subscriber Identity (IMSI) = 123456700003983
International Mobile Equipment Identity (IMEI) = 359074060002450
Integrated Circuit Card ID (ICCID) = 8952530076180183983
```

```
Mobile Subscriber Integrated Services
Digital Network-Number (MSISDN) =
Modem Status = Modem Online
Current Modem Temperature = 49 deg C
PRI SKU ID = 9904934, PRI version = 002.013, Carrier = Telstra
OEM PRI version = 000.007
```

Note You should reload the router after the modem firmware upgrade, regardless of the upgrade is a success or failure.

Step 10 After the firmware upgrade as well as after the router reload, the modem status should be online. Check whether the modem status is online.

Example:

```
Router# show cellular 0 radio
Radio power mode = online
LTE Rx Channel Number = 9410
LTE Tx Channel Number = 27410
LTE Band = 28
LTE Bandwidth = 20 MHz
Current RSSI = -61 dBm
Current RSRP = -95 dBm
Current RSRQ = -11 dB
Current SNR = 4.8 dB
Radio Access Technology(RAT) Preference = AUTO
Radio Access Technology(RAT) Selected = LTE
```

Upgrading only the Carrier Provisioning File

Perform the following steps to manually upgrade the carrier PRI file for MC7430 modem.

Procedure

Step 1 Perform the steps from 1 to 4 in Upgrading Firmware File and Carrier PRI file , on page 75.

Step 2 Ensure that the currently running firmware version in the modem has the same version as the carrier PRI file going to be upgraded.

Example:

```
Router# dir flash: 02.14.03.00_Docomo_000.010_000_NVU
Directory of flash0:/02.08.02.00_Gen/
13 -rw- 5696 Feb 2 2016 04:36:28 +00:00
7430_02.14.03.00
_DoCoMo_000.010_000.nvu
Router# show cellular 0 hardware
Modem Firmware Version = SWI9X30C_02.14.03.00
Modem Firmware built = 2016/03/28 14:34:14
Hardware Version = 0.2
Device Model ID: MC7430
International Mobile Subscriber Identity (IMSI) = 123456700003983
International Mobile Equipment Identity (IMEI) = 359074060002450
Integrated Circuit Card ID (ICCID) = 8952530076180183983
Mobile Subscriber Integrated Services
Digital Network-Number (MSISDN) =
Modem Status = Modem Online
```

```
Current Modem Temperature = 49 deg C
PRI SKU ID = 9904934, PRI version = 002.013, Carrier = Telstra
OEM PRI version = 000.007
```

Step 3 Initiate the firmware upgrade process using the **microcode reload cellular** command. When you use this command, provide the directory name instead of firmware file name.

For EHWIC-LTE-LA, EHWIC-LTE-JN, and EHWIC-LTE-CI

Example:

```
Router# microcode reload cellular 0
slot_number
 modem-provision flash:/
directory
For C898EAG-LTE-LA-K9, C897VAG-LTE-LA-K9, C899G-LTE-LA-K9, C819G-LTE-LA-K9
Router# microcode reload cellular 0 0 modem-provision flash:/
directory
```

For C819GW-LTE-LA-CK9, C819GW-LTE-LA-QK9, C819GW-LTE-LA-NK9

Example:

```
Router# microcode reload cellular 0 lte modem-provision flash:/
directory
```

Step 4 Once the firmware upgrade begins, wait for a few minutes. The firmware upgrade may take upto 7 minutes. The following message will be displayed if the firmware upgrade is successful.

For EHWIC-LTE-LA, EHWIC-LTE-JN, EHWIC-LTE-CI, C898EAG-LTE-LA-K9, C897VAG-LTE-LA-K9, C899G-LTE-LA-K9 and C819G-LTE-LA-K9

Example:

```
F/W Upgrade: Firmware Upgrade has Completed Successfully
```

For C819GW-LTE-LA-CK9, C819GW-LTE-LA-QK9, C819GW-LTE-LA-NK9

Example:

```
Firmware download successful!
Please wait for the modem to come up, this may take few minutes.
```

Step 5 Once the message indicates a successful upgrade, wait for 2 minutes till the modem comes up.

Step 6 After the firmware upgrade, reload the router to verify that you have the latest firmware.

Example:

```
Router# show cellular 0/0/0 hardware
Modem Firmware Version = SWI9X30C_02.14.03.00
Modem Firmware built = 2016/03/28 14:34:14
Hardware Version = 0.2
Device Model ID: MC7430
International Mobile Subscriber Identity (IMSI) = 123456000009809
International Mobile Equipment Identity (IMEI) = 359074060002039
Integrated Circuit Card ID (ICCID) = 8952530076180099809
Mobile Subscriber Integrated Services
Digital Network-Number (MSISDN) =
Modem Status = Modem Online
Current Modem Temperature = 0 deg C
```

```
PRI SKU ID = 1102644, PRI version = 000.010, Carrier = NTT docomo
OEM PRI version = 000.007
```

Note You should reload the router after the modem firmware upgrade, regardless of the upgrade is a success or failure.

Step 7 After the firmware upgrade, as well as after the modem reload, the modem status should be online. Check whether the modem status is online.

Example:

```
Router# show cellular 0/0/0 radio
Radio power mode = online
LTE Rx Channel Number = 9410
LTE Tx Channel Number = 27410
LTE Band = 28
LTE Bandwidth = 20 MHz
Current RSSI = -61 dBm
Current RSRP = -95 dBm
Current RSRQ = -11 dB
Current SNR = 4.8 dB
Radio Access Technology(RAT) Preference = AUTO
Radio Access Technology(RAT) Selected = LTE
```

Upgrading only the Cisco OEM PRI File

Perform the following steps to manually upgrade the Cisco OEM PRI file for MC7430 modem.

Procedure

Step 1 Perform the steps from 1 to 4 in Upgrading Firmware File and Carrier PRI file , on page 75.

Step 2 Check the versions of old OEM PRI and the new OEM PRI and ensure that the old PRI is available. Use the **show cell** *slot* **hardware** command to check the OEM PRI version.

Example:

```
Router# dir flash:OEM_PRI_Cisco_000.007
Directory of flash:/OEM_PRI_Cisco_000.007/
33 -rw- 8852 Jun 23 2016 10:19:14 -07:00
MC7430_1102644_9904934_02.14.03.00_00_Cisco_000.007_000.nvu
1048281088 bytes total (554991616 bytes free)
```

Step 3 Initiate the firmware upgrade process using the **microcode reload cellular** command. When you use this command, provide the directory name instead of firmware file name.

For EHWIC-LTE-LA, EHWIC-LTE-JN, and EHWIC-LTE-CI

Example:

```
Router# microcode reload cellular 0
slot_number
 modem-provision flash:/
directory
For C898EAG-LTE-LA-K9, C897VAG-LTE-LA-K9, C899G-LTE-LA-K9, and C819G-LTE-LA-K9
Router# microcode reload cellular 0 0 modem-provision flash:/
directory
```

For C819GW-LTE-LA-CK9, C819GW-LTE-LA-QK9, C819GW-LTE-LA-NK9

Example:

```
Router# microcode reload cellular 0 lte modem-provision flash:/
directory
```

Step 4 Once the firmware upgrade begins, wait for a few minutes. The firmware upgrade may take upto 7 minutes. The following message will be displayed if the firmware upgrade is successful.

For EHWIC-LTE-LA, EHWIC-LTE-JN, EHWIC-LTE-CI, C898EAG-LTE-LA-K9, C897VAG-LTE-LA-K9, C899G-LTE-LA-K9, and C819G-LTE-LA-K9

Example:

```
F/W Upgrade: Firmware Upgrade has Completed Successfully
```

For C819GW-LTE-LA-CK9, C819GW-LTE-LA-QK9, C819GW-LTE-LA-NK9

Example:

```
Firmware download successful!
Please wait for the modem to come up, this may take few minutes.
```

Step 5 Once the message indicates a successful upgrade, wait for 2 minutes till the modem comes up.

Step 6 After the firmware upgrade, reload the router and verify that you have the latest firmware.

Example:

```
Router# show cellular 0 hardware
Modem Firmware Version = SWI9X30C_02.14.03.00
Modem Firmware built = 2016/03/28 14:34:14
Hardware Version = 0.2
Device Model ID: MC7430
International Mobile Subscriber Identity (IMSI) = 123456700002704
International Mobile Equipment Identity (IMEI) = 359074060002542
Integrated Circuit Card ID (ICCID) = 8952530076180182704
Mobile Subscriber Integrated Services
Digital Network-Number (MSISDN) =
Modem Status = Modem Online
Current Modem Temperature = 55 deg C
PRI SKU ID = 1102644, PRI version = 002.012, Carrier = Generic
OEM PRI version = 000.007
```

Note You should reload the router after the modem firmware upgrade, regardless of the upgrade is a success or failure.

Step 7 After the firmware upgrade, as well as after the reload, the modem status should be online. Check whether the modem status is online.

Example:

```
Router# show cellular 0/0/0 radio
Radio power mode = online
LTE Rx Channel Number = 9410
LTE Tx Channel Number = 27410
LTE Band = 28
LTE Bandwidth = 20 MHz
Current RSSI = -61 dBm
Current RSRP = -95 dBm
```

```
Current RSRQ = -11 dB
Current SNR = 4.8 dB
Radio Access Technology(RAT) Preference = AUTO
Radio Access Technology(RAT) Selected = LTE
```

Cisco Network PnP Discovery Over 4G Interface

Cisco Network Plug and Play (PnP) over 4G interface is available on platforms that have 4G NIMs and running Cisco IOS Release 15.7M&T or later releases. When you boot a device with an activated SIM card, the 4G interface is activated and used for the Cisco Network PnP cloud discovery process. When you boot a device without an activated SIM card, the non-4G interfaces are preferred for the discovery process. Cisco Network PnP cloud discovery over 4G interfaces is attempted when the non-4G interfaces are not available or if the Cisco Network PnP discovery does not succeed on the non-4G interfaces. When the device has multiple 4G interfaces with active SIM cards, the Cisco Network PnP will try the cloud discovery on all the 4G interfaces one after the other until one of them succeeds.

By default, Cisco Network PnP Cloud discovery over 4G interfaces works when all the 4G interfaces are activated during the device bootup. In the absence of a startup configuration, the device attempts to bring up the 4G interface by default and attempts Cisco PnP over cloud. After the device is redirected, the device connects to the Cisco Network PnP server and downloads the appropriate image and configuration to the device.

Note PnP Discovery over 4G Interface supports only IPv4.

Note Image upgrade on Cisco IR800 and Cisco CGR1000 is not supported. Only configuration upgrade is supported.

Note Ensure that the configuration pushed through the Cisco Network PnP server contains a route to the Cisco Network PnP server over the 4G interface. This route can be a default route and should retain the Cisco Network PnP agent and server communication to continue to work over the 4G interface, after the provisioning is completed.

Prerequisites for Cisco Network PnP Discovery Over 4G Interface

- 4G NIMs have an activated SIM card inserted in it.
- The modem has the correct firmware. If the firmware on the modem is generic, you have to configure the Access Point Name (APN) manually.
- Antennas are properly installed and radio signal is good.
- You have to program the PnP Connect (the cloud redirect server) to its appropriate server. Using your smart account credentials, you can do it at **software.cisco.com** portal. For more information on how to do it, see https://www.youtube.com/watch?v=EOTK6Sb5gRQ&list=PLGqSRuvZkXDcw0lCR-vBPNIos05kMsagu&index=4

How PnP over 4G LTE Works

The following workflow shows how PnP works over 4G LTE:

Table 8: PnP over 4G LTE Workflow

Steps	Process
Step 1	4G modem attaches to the base station and obtains a DHCP IP address.
Step 2	DHCP allocates an IP address to the cellular interface. After that, the PnP discovery process starts.
Step 3	The router connects to Cisco Plug and Play Connect portal at **devicehelper.cisco.com** over a secure HTTPS channel. The portal redirects the device to its appropriate PnP Server or Controller.
Step 4	The APIC-EM server securely provisions the configuration and image.

The following figure illustrates the workflow:

Figure 8: PnP Over 4G LTE Workflow Diagram

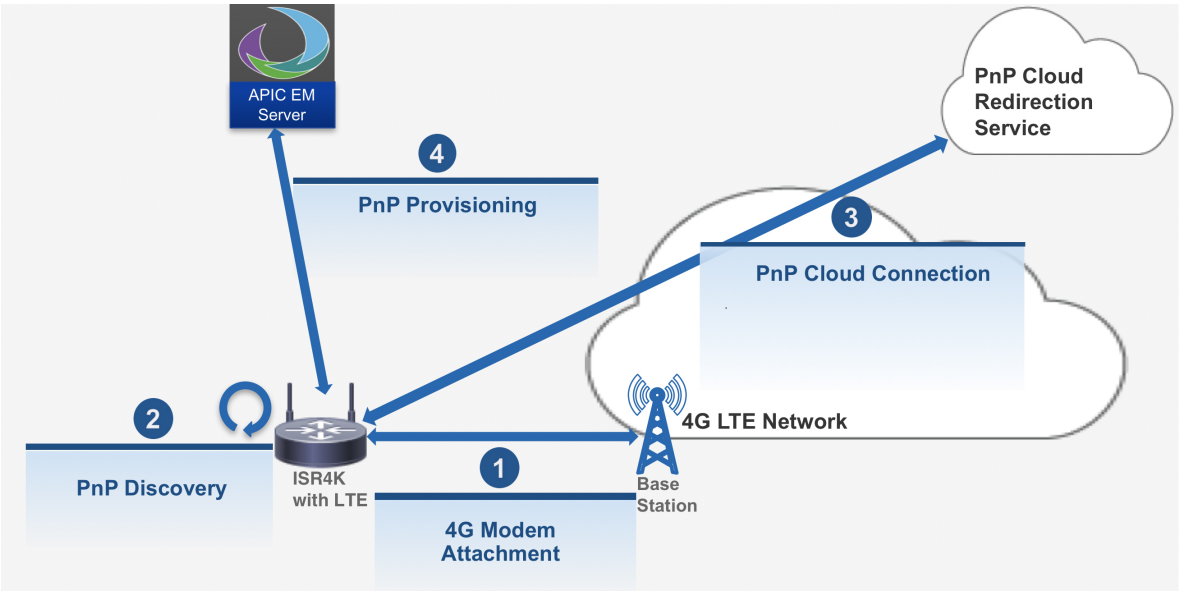

Troubleshooting

You do not need to manually enable PnP. PnP is enabled automatically when the router boots up.

Note PnP is not invoked if the startup configuration is present in the router.

The following log file shows a successful scenario of the PnP boot-up:

```
*May 22 17:34:45.011: %PNP-6-PNP_4G_DISCOVERY_STARTING: PnP Discovery over 4G
Starting..Please Wait

*May 22 17:49:15.638: %PNP-6-HTTP_CONNECTING: PnP Discovery trying to connect to
 PnP server https://72.163.11.184/pnp/HELLO

May 22 17:49:22.917: %PNP-6-HTTP_CONNECTED: PnP Discovery connected to PnP server
 https://72.163.11.184/pnp/HELLO

May 22 17:53:34.556: %PNP-6-PNP_DISCOVERY_DONE: PnP Discovery done successfully
```

The following log file shows a failure scenario when the startup configuration is present in the router:

```
*Jun 14 20:51:04.037: %PNP-6-PNP_DISCOVERY_STOPPED: PnP Discovery stopped (Startup
 Config Present)
```

The following log file shows a failure scenario when a user interrupts the PnP discovery process:

```
*Jun 14 21:23:16.059: %PNP-6-PNP_DISCOVERY_STOPPED: PnP Discovery stopped (Config
 Wizard)
```

Enabling Serviceability

Serviceability or Non-Access Stratum (NAS) is a set of protocols in the Evolved Packet System. The NAS is used to convey non-radio signaling between the User Equipment (UE) and the Mobility Management Entity (MME). The serviceability feature collects the NAS messages during a network outage and helps you to narrow down the issues on the network or UE side.

Restrictions

Follow these restrictions and usage guideline while configuring serviceability .

- This feature is not supported on the C819GW router and 4G CGM module.

Enabling Serviceability

The following example shows how to enable serviceability:

```
Router#config terminal
Router(config)#controller cellular 0/0/0
Router(config-controller)#lte modem svb-log enable
Router(config-controller)#end
```

The following example shows how to specify the log size and the file size of the log file:

```
Router#config terminal
Router(config)#controller cellular 0/0/0
Router(config-controller)#lte modem svb-log size 0
Router(config-controller)#lte modem svb-log filesize 1
Router(config-controller)#lte modem svb-log enable
Router(config-controller)#end
```

Viewing Log File

Use the **show cellular** *slot* **logs svb-log** command to display the log file.

```
Router#show cellular 0/0/0 logs svb-log
Modem SVB logging is on
output path = flash:
maximum log size = none
maximum file size = 1048576
log rotation = disabled

70 packets received from the modem, 12746 bytes, 0 input drops
70 packets stored in file system, 12746 bytes, 0 errors, 0 aborts
6 max rcv queue size

current file size = 43244
current log size = 43244
total log size = 43244
SVB log files: (14 files)
        flash:svblog20170712-205107slot128.bin size 8504
        flash:svblog20170720-223315slot128.bin size 196
        flash:svblog20170720-223542slot128.bin size 196
        flash:svblog20170720-224009slot128.bin size 196
        flash:svblog20170720-224157slot128.bin size 688
        flash:svblog20170720-224915slot128.bin size 196
        flash:svblog20170720-225110slot128.bin size 688
        flash:svblog20170720-230316slot128.bin size 196
        flash:svblog20170720-231407slot128.bin size 196
        flash:svblog20170721-171844slot128.bin size 196
        flash:svblog20170721-172034slot128.bin size 688
        flash:svblog20170721-172534slot128.bin size 492
        flash:svblog20170721-205042slot128.bin size 13078
        flash:svblog20170727-211335slot128.bin size 17734
Router#
Router#dir flash:svb*
Directory of bootflash:/svb*

Directory of bootflash:/

40970  -rw-         196  Jul 20 2017 22:33:15 +00:00  svblog20170720-223315slot128.bin
40975  -rw-         196  Jul 20 2017 22:35:42 +00:00  svblog20170720-223542slot128.bin
40978  -rw-         196  Jul 20 2017 22:40:09 +00:00  svblog20170720-224009slot128.bin
40979  -rw-         688  Jul 20 2017 22:46:48 +00:00  svblog20170720-224157slot128.bin
40980  -rw-         196  Jul 20 2017 22:49:18 +00:00  svblog20170720-224915slot128.bin
40981  -rw-         688  Jul 20 2017 22:53:45 +00:00  svblog20170720-225110slot128.bin
40982  -rw-         196  Jul 20 2017 23:03:16 +00:00  svblog20170720-230316slot128.bin
40983  -rw-         196  Jul 20 2017 23:14:07 +00:00  svblog20170720-231407slot128.bin
40984  -rw-         196  Jul 21 2017 17:18:44 +00:00  svblog20170721-171844slot128.bin
40985  -rw-         688  Jul 21 2017 17:23:46 +00:00  svblog20170721-172034slot128.bin
40986  -rw-         492  Jul 21 2017 17:25:34 +00:00  svblog20170721-172534slot128.bin
40987  -rw-       13078  Jul 27 2017 12:15:15 +00:00  svblog20170721-205042slot128.bin
40988  -rw-       17734   Aug 2 2017 00:10:15 +00:00  svblog20170727-211335slot128.bin
7169642496 bytes total (76120064 bytes free)
Router#
```

Configuring and Verifying Maximum Transmission Unit

This section explains how to configure the Maximum Transmission Unit (MTU) on a cellular interface.

Note You can set a MTU of 2K on the cellular interface if your service provider's network can support it.

Prerequisites for Configuring MTU

- The network of the Service Provider support Maximum Transmission Unit (MTU) of 2K.
- Before you configure the feature, you have to upgrade the OEM PRI file of the modem.

Restrictions

Follow these restrictions and usage guideline while configuring MTU.

- This feature (MTU of 2K) is supported only on the EM7455, MC7304, and MC7354MNA modems.

Configuring MTU

The supported MTU value is determined only after a call is established between the modem and the network. The cellular interface can accept an MTU value up to 2000 bytes.

The following example shows how to set the MTU value to 2000:

```
Router#config terminal
Router(config)#interface cellular 0/0/0
Router(config-if)#mtu 2000
Router(config-if)#end
```

Verifying MTU Configuration

Use the **show cellular** *slot* **network** command to verify the MTU configuration. Note that the MTU value is available only after a call is established between the modem and the network.

The following example shows the output of the command before a call:

```
Router#show cellular 1 network
Current System Time = Sun Jan 6 0:1:39 1980
Current Service Status = Normal
Current Service = Packet switched
Current Roaming Status = Roaming
Network Selection Mode = Automatic
Network = 123 456
Mobile Country Code (MCC) = 123
Mobile Network Code (MNC) = 456
Packet switch domain(PS) state = Attached
LTE Carrier Aggregation state = Deconfigured
Registration state(EMM) = Registered
EMM Sub State = Normal Service
Tracking Area Code (TAC) = 1
Cell ID = 256
Network MTU is not Available
Router#
```

The following example shows the output of the command after a call:

Note For 73XX modems, the below output always shows negotiated network MTU value as 2000.

```
Router#show cellular 1 network
Current System Time = Sun Jan 6 0:1:2 1980
Current Service Status = Normal
Current Service = Packet switched
```

```
Current Roaming Status = Roaming
Network Selection Mode = Automatic
Network = Test1-1
Mobile Country Code (MCC) = 1
Mobile Network Code (MNC) = 1
Packet switch domain(PS) state = Attached
LTE Carrier Aggregation state = Deconfigured
Registration state(EMM) = Registered
EMM Sub State = Normal Service
Tracking Area Code (TAC) = 1
Cell ID = 256
Negotiated network MTU is 2000
Router#
```

Troubleshooting

This section provides the necessary background information and resources available for troubleshooting the Cisco 4G-LTE Wireless WAN EHWIC.

For LED descriptions, see Cisco 4G LTE Wireless WAN EHWIC .

Verifying Data Call Setup

To verify the data call setup, follow these steps:

1. After you create a modem data profile using the cellular profile create command and configuring DDR on the cellular interface, send a ping from the router to a host across the wireless network.
2. If the ping fails, debug the failure by using the following debug and show commands:
   - **debug chat**
   - **debug modem**
   - **debug dialer**
   - **show cellular all**
   - **show interface cellular**
   - **show running-config**
   - **show ip route**
3. Save the output from these commands and contact your system administrator.

Checking Signal Strength

If the Received Signal Strength Indication (RSSI) level is very low (for example, if it is less than –110 dBm), follow these steps:

Procedure

Step 1 Check the antenna connection. Make sure the TNC connector is correctly threaded and tightened.

Step 2 If you are using a remote antenna, move the antenna cradle and check if the RSSI has improved.

Step 3 Contact your wireless service provider to verify if there is service availability in your area.

Verifying Service Availability

The following is a sample output for the **show cellular all** command for a scenario where the antenna is disconnected and a modem data profile has not been created. The errors in this case have been highlighted with >>>>>>> .

```
Device# show cellular 0/0/0 all
Hardware Information
====================
Modem Firmware Version = SWI9600M_01.00.09.03
Modem Firmware built = 2011/07/01 19:31:09
Hardware Version = 20460000
International Mobile Subscriber Identity (IMSI) = <specific sim number>
International Mobile Equipment Identity (IMEI) = <specific modem number>
Electronic Serial Number (ESN) = <specific ESN in Hex> [specific ESN in Dec]
Integrated Circuit Card ID (ICCID) = <specific ICCID number>
Mobile Subscriber International Subscriber
IDentity Number (MSISDN) = <specific phone number>
Profile Information
====================
 * - Default profile
>>>>>>>>

no profile here.
Data Connection Information
===========================
Profile 1, Packet Session Status = INACTIVE
        Inactivity Reason = Normal inactivate state
Profile 2, Packet Session Status = INACTIVE
        Inactivity Reason = Normal inactivate state
Profile 3, Packet Session Status = INACTIVE
        Inactivity Reason = Normal inactivate state
Profile 4, Packet Session Status = INACTIVE
        Inactivity Reason = Normal inactivate state
Profile 5, Packet Session Status = INACTIVE
        Inactivity Reason = Normal inactivate state
Profile 6, Packet Session Status = INACTIVE
        Inactivity Reason = Normal inactivate state
Profile 7, Packet Session Status = INACTIVE
        Inactivity Reason = Normal inactivate state
Profile 8, Packet Session Status = INACTIVE
        Inactivity Reason = Normal inactivate state
Profile 9, Packet Session Status = INACTIVE
        Inactivity Reason = Normal inactivate state
Profile 10, Packet Session Status = INACTIVE
        Inactivity Reason = Normal inactivate state
Profile 11, Packet Session Status = INACTIVE
        Inactivity Reason = Normal inactivate state
Profile 12, Packet Session Status = INACTIVE
        Inactivity Reason = Normal inactivate state
Profile 13, Packet Session Status = INACTIVE
        Inactivity Reason = Normal inactivate state
Profile 14, Packet Session Status = INACTIVE
        Inactivity Reason = Normal inactivate state
Profile 15, Packet Session Status = INACTIVE
        Inactivity Reason = Normal inactivate state
Profile 16, Packet Session Status = INACTIVE
        Inactivity Reason = Normal inactivate state

Network Information
===================
Current Service Status = No service, Service Error = None
>>>>>>> no service means not connected to the network.
```

```
Current Service = Packet Switched
Current Roaming Status = Home
Network Selection Mode = Automatic
Country = , Network =
Mobile Country Code (MCC) = 0
Mobile Network Code (MNC) = 0
Radio Information
=================
Radio power mode = Online
Current RSSI = -125 dBm
>>>>>>> either no antenna, or bad antenna or out of network.
Radio power mode = Online
LTE Technology Selected = LTE
Modem Security Information
==========================
Card Holder Verification (CHV1) = Disabled
SIM Status = OK
SIM User Operation Required = None
Number of CHV1 Retries remaining = 3
```

Successful Call Setup

The following is a sample output when a call is set up using a chat script. It shows a received IP address from the network. Call setup is successful and data path is open.

```
debugs
debug modem
debup chat
Device#
Aug 25 18:46:59.604: CHAT0/0/0: Attempting async line dialer script
Aug 25 18:46:59.604: CHAT0/0/0: Dialing using Modem script: lte & System script: none
Aug 25 18:46:59.604: CHAT0/0/0: process started
Aug 25 18:46:59.604: CHAT0/0/0: Asserting DTR
Aug 25 18:46:59.604: CHAT0/0/0: Chat script lte started
Aug 25 18:46:59.604: CHAT0/0/0: Sending string: AT!CALL
Aug 25 18:46:59.604: CHAT0/0/0: Expecting string: OK
Aug 25 18:47:00.641: CHAT0/0/0: Completed match for expect: OK
Aug 25 18:47:00.641: CHAT0/0/0: Chat script lte finished, status = Success
Aug 25 18:47:00.641: TTY0/0/0: no timer type 1 to destroy
Aug 25 18:47:00.641: TTY0/0/0: no timer type 0 to destroy
Aug 25 18:47:00.641: TTY0/0/0: no timer type 2 to destroy
Aug 25 18:47:02.642: %LINK-3-UPDOWN: Interface Cellular0/0/0, changed state to up
Aug 25 18:47:02.642: %DIALER-6-BIND: Interface Ce0/0/0 bound to profile Di1
Aug 25 18:47:03.642: %LINEPROTO-5-UPDOWN: Line protocol on Interface Cellular0/0/0, changed
 state to up (69.78.96.14) [OK]
```

Modem Troubleshooting Using Integrated Modem DM Logging

As part of the 3G and 4G serviceability enhancement in Cisco IOS Release 15.2(4)M2 and Cisco IOS Release 15.3(1)T, DM log collection has been integrated into Cisco IOS, eliminating the need for an external PC and simplifying the DM log collection process. The lte modem dm-log command can be used in controller cellular configuration mode to configure integrated DM logging to monitor traffic on the modem. See the Cisco 3G and 4G Serviceability Enhancement User Guide for more information on configuring Integrated DM Logging parameters.

Modem Settings for North America and Carriers Operating on 700 MHz Band

For HWIC-3G deployments in North America and for carriers operating in the 700 MHz band, the following changes to the modem settings are required to prevent long network attach times.

The output of show cellular x/x/x all command shows the following:

- Current RSSI is –125 dBM
- LTE Technology Preference = No preference specified (AUTO)

Changing Modem Settings

To change the modem settings to force the modem to scan different technologies, use the following Cisco IOS command:

```
Device# cellular 0/0/0 lte technology
auto         Automatic LTE Technology Selection
cdma-1xrtt   CDMA 1xRTT
cdma-evdo    CDMA EVDO Rev A
cdma-hybrid  HYBRID CDMA
gsm          GSM
lte          LTE
umts         UMTS
```

Electronic Serial Number (ESN)

The ESN number is located directly on the modem label in hexadecimal notation. It can also be retrieved using the Cisco IOS CLI using the show cellular *slot/port/hwic* **hardware** command.

The sample output below shows the ESN number:

```
Hardware Information
====================
Electronic Serial Number (ESN) = 0x603c9854 [09603971156]
Electronic Serial Number (ESN) = <specific ESN in hexadecimal> [specific ESN in decimal]
```

Configuration Examples for 4G LTE

Example: Basic Cellular Interface Configuration: Cisco EHWIC-4G-LTE

The following example shows how to configure the cellular interface to be used as a primary and is configured as the default route:

```
Device# show running-config
chat-script lte "" "AT!CALL" TIMEOUT 20 "OK"
interface Cellular0/0/0
ip address negotiated
encapsulation slip
dialer in-band
dialer string lte
dialer-group 1
async mode interactive
ip route 172.22.1.10 255.255.255.255 cellular 0/0/0
dialer-list 1 protocol ip permit
line 0/0/0
script dialer lte
modem InOut
```

Example: Basic Cellular Interface Configuration: Cisco 819 4G LTE ISR

The following example shows how to configure the cellular interface to be used as primary and is configured as the default route:

```
chat-script lte "" "AT!CALL1" TIMEOUT 20 "OK"
!
!
controller Cellular 0
!
!
interface Cellular0
 ip address negotiated
 encapsulation slip
 load-interval 30
 dialer in-band
 dialer idle-timeout 0
 dialer string lte
 dialer-group 1
 no peer default ip address
 async mode interactive
 routing dynamic
!
ip route 172.22.1.10 255.255.255.255 cellular 0/0/0
!
dialer-list 1 protocol ip permit
!
line 3
 script dialer lte
 modem InOut
 no exec
 transport input all
 transport output all
!
```

Example: Creating, Modifying, or Deleting Modem Data Profiles

The following example shows how to change a default profile on EHWIC-4G-LTE-A:

```
router(config-controller)# lte sim data-profile 2 attach-profile 1
router(config-controller)# end
router#
router# sh run
Building configuration...
controller Cellular 0/1
 lte sim profile 2
router# ping 8.8.4.4 rep 10
Type escape sequence to abort.
Sending 10, 100-byte ICMP Echos to 8.8.4.4, timeout is 2 seconds:
!!!!!!!!!!
Success rate is 100 percent (10/10), round-trip min/avg/max = 284/364/600 ms
router#
```

The following example shows the output of the **show cellular** command:

```
router# show cellular 0/1/0 profile
Profile 1 = INACTIVE **
--------
PDP Type = IPv4
Access Point Name (APN) = Broadband
Profile 2 = ACTIVE*
--------
PDP Type = IPv4
PDP address = 10.176.207.8
Access Point Name (APN) = Broadband
        Primary DNS address = 172.26.38.1
```

```
        Secondary DNS address = 172.26.38.2
  * - Default profile
 ** - LTE attach profile
```

The following example shows the output of the **show cellular** command before you enable the debug command:

```
router# show cellular 0/0/0 profile
Profile 1 = INACTIVE **
--------
PDP Type = IPv6
Access Point Name (APN) = vzwims
Profile 2 = INACTIVE
--------
PDP Type = IPv4v6
Access Point Name (APN) = vzwadmin
Profile 3 = ACTIVE*
--------
PDP Type = IPv4v6
PDP address = 10.187.130.3
Access Point Name (APN) = VZWINTERNET
        Primary DNS address = 198.224.173.135
        Secondary DNS address = 198.224.174.135
Profile 4 = INACTIVE
--------
PDP Type = IPv4v6
Access Point Name (APN) = vzwapp

  * - Default profile    /* Note
 ** - LTE attach profile  /* note
```

The following example shows the output of the **show cellular** command after you enable the debug command:

```
router# debug cellular 0/0/0 messages profile
PROFILE_3GPP2 debugging is on
router#
router #show cellular 0/0/0 profile
Profile 1 = INACTIVE **
--------
PDP Type = IPv6
Access Point Name (APN) = vzwims
Profile 2 = INACTIVE
--------
PDP Type = IPv4v6
Access Point Name (APN) = vzwadmin
Profile 3 = ACTIVE*
--------
PDP Type = IPv4v6
PDP address = 10.187.130.3
Access Point Name (APN) = VZWINTERNET
        Primary DNS address = 198.224.173.135
        Secondary DNS address = 198.224.174.135
Profile 4 = INACTIVE
--------
PDP Type = IPv4v6
Access Point Name (APN) = vzwapp
3GPP2 Profiles:
==============
Profile 1 = INACTIVE
--------
PDN Type = IPv6
Access Point Name (APN) = vzwims
Profile 2 = INACTIVE
--------
```

```
PDN Type = IPv4v6
Access Point Name (APN) = vzwadmin
Profile 3 = INACTIVE*
--------
PDN Type = IPv4v6
Access Point Name (APN) = VZWINTERNET
Profile 4 = INACTIVE
--------
PDN Type = IPv4v6
Access Point Name (APN) = vzwapp

Profile 5 = INACTIVE
--------
PDN Type = IPv4v6
Access Point Name (APN) =
Profile 6 = INACTIVE
--------
PDN Type = IPv4v6
Access Point Name (APN) =
  * - Default profile
 ** - LTE attach profile
```

Example: Configuring a Dual SIM

The following example shows how to configure a dual SIM:

```
router# configure terminal
router(config)# controller Cellular 0
router(config-controller)# lte sim
data-profile
1 attach-profile
 1 slot 0
router(config-controller)# lte sim
data-profile
2 attach-profile
 2 slot 1
router(config-controller)# lte sim primary slot 1
router(config-controller)# lte sim max-retry 20
router(config-controller)# lte sim failovertimer 5
```

The following example shows how to display an active profile on a SIM:

```
router# show cellular 0 profile
Profile Information
====================
Profile 1 = INACTIVE
--------
PDP Type = IPv4
Access Point Name (APN) = internet.telenor.se
Profile 2 = ACTIVE* **
--------
PDP Type = IPv4
PDP address = 78.78.16.214
Access Point Name (APN) = telia.online.se
        Primary DNS address = 195.67.199.18
        Secondary DNS address = 195.67.199.19
  * - Default profile
 ** - LTE attach profile
Configured default profile for active SIM 1 is profile 2.
```

The following example shows how to display the status of a dual SIM:

```
router# show cellular 0 security
Active SIM = 0
SIM switchover attempts = 0
Card Holder Verification (CHV1) = Disabled
SIM Status = OK
SIM User Operation Required = None
Number of CHV1 Retries remaining = 3
router#
```

The following example shows how to display the status of a dual SIM:

```
router# show controller cellular 0
Interface Cellular0
4G WWAN Modem - Global Multimode LTE/DC-HSPA+/HSPA+/HSPA/UMTS/EDGE/GPRS
Cellular modem configuration
=====================================
Modem is recognized as valid
manufacture id:  0x00001199     product id: 0x000068A2
Power status: Active
Sierra Wireless Direct IP MC7710 modem
:
:
Cellular Dual SIM details:
---------------------------
SIM 0 is present
SIM 1 is present
SIM 0 is active SIM
```

Cellular Interface Configuration for Always-On Connection

Dialer-Watch Configuration without External Dialer Interface

The following example shows how to configure dialer-watch without external dialer interface. The bold text is used to indicate important commands that are specific to dialer-watch.

```
chat-script lte "" "AT!CALL" TIMEOUT 20 "OK"
interface Cellular0/0/0
 ip address negotiated
 encapsulation slip
 dialer in-band
 dialer string LTE
 dialer watch-group 1
 async mode interactive
!
dialer watch-list 1 ip 5.6.7.8 0.0.0.0
dialer watch-list 1 delay route-check initial 60
dialer watch-list 1 delay connect 1
!
ip route 0.0.0.0 0.0.0.0 cellular 0/0/0
line 0/0/0
 script dialer LTE
 modem InOut
 no exec
 transport input all
 transport output all
```

Dialer-Persistent Configuration with External Dialer Interface

The following example shows how to configure dialer-persistent with external dialer interface. The bold text is used to indicate important commands that are specific to dialer-persistent.

```
chat-script lte "" "AT!CALL" TIMEOUT 20 "OK"
interface Cellular0/0/0
 ip address negotiated
  encapsulation slip
 dialer in-band
 dialer pool-member 1
 async mode interactive
 routing dynamic
interface Dialer1
ip address negotiated
encapsulation slip
 dialer pool 1
 dialer idle-timeout 0
 dialer string lte
 dialer persistent
 dialer-group 1
!
dialer-list 1 protocol ip permit
ip route 0.0.0.0 0.0.0.0 dialer 1
line 0/0/0
 script dialer lte
 modem InOut
 no exec
 transport input all
 transport output all
```

Example: GRE Tunnel over Cellular Interface Configuration

The following example shows how to configure the static IP address when a GRE tunnel interface is configured with **ip address unnumbered** *cellular interface*:

Note The GRE tunnel configuration is supported only if the service providers provide a public IP address on the LTE interface.

Note For service providers using a private IP address, the point-to-point static GRE tunnel cannot be set up with a private IP address at one end and a public IP address on the other end.

```
interface Tunnel2
ip unnumbered **internal LAN interface GE0/0 etc.**
tunnel source Cellular0
tunnel destination a.b.c.d
interface Cellular0
ip address negotiated
encapsulation slip
no ip mroute-cache
dialer in-band
dialer string lte
dialer-group 1
async mode interactive
```

4G-LTE Wireless WAN as Backup with NAT and IPSec

The following example shows how to configure the 4G-LTE wireless WAN on the router as backup with NAT and IPSec:

Note The receive and transmit speeds cannot be configured. The actual throughput depends on the cellular network service.

```
ip dhcp excluded-address 10.4.0.254
!
ip dhcp pool lan-pool
   network 10.4.0.0 255.255.0.0
   dns-server 10.4.0.254
   default-router 10.4.0.254
!
!
chat-script lte "" "AT!CALL" TIMEOUT 20 "OK"
crypto isakmp policy 1
 encr 3des
 authentication pre-share
crypto isakmp key  address a.b.c.d
!
!
crypto ipsec transform-set  ah-sha-hmac esp-3des
!
crypto map gsm1 10 ipsec-isakmp
 set peer a.b.c.d
 set transform-set
 match address 103
!
!
interface ATM0/0/0
 no ip address
 ip virtual-reassembly
 load-interval 30
 no atm ilmi-keepalive
 dsl operating-mode auto
!
interface ATM0/0/0.1 point-to-point
 backup interface Cellular0/3/0
 ip nat outside
 ip virtual-reassembly
 no snmp trap link-status
 pvc 0/35
  pppoe-client dial-pool-number 2
 !
!
interface Cellular0/3/0
 ip address negotiated
 ip nat outside
 ip virtual-reassembly
 encapsulation slip
 no ip mroute-cache
 dialer in-band
 dialer idle-timeout 0
 dialer string lte
 dialer-group 1
 async mode interactive
 crypto map gsm1
```

```
!
interface Vlan104
 description used as default gateway address for DHCP clients
 ip address 10.4.0.254 255.255.0.0
 ip nat inside
 ip virtual-reassembly
!
interface Dialer2
 ip address negotiated
 ip mtu 1492
 ip nat outside
 ip virtual-reassembly
 encapsulation ppp
 load-interval 30
 dialer pool 2
 dialer-group 2
 ppp authentication chap callin
 ppp chap hostname cisco@dsl.com
 ppp chap password 0 cisco
 ppp ipcp dns request
 crypto map gsm1
!
ip local policy route-map track-primary-if
ip route 0.0.0.0 0.0.0.0 Dialer2 track 234
ip route 0.0.0.0 0.0.0.0 Cellular0/3/0 254
!
!
ip nat inside source route-map nat2cell interface Cellular0/3/0 overload
ip nat inside source route-map nat2dsl interface Dialer2 overload
!
ip sla 1
 icmp-echo 2.2.2.2 source-interface Dialer2
 timeout 1000
 frequency 2
ip sla schedule 1 life forever start-time now
access-list 1 permit any
access-list 101 deny ip 10.4.0.0 0.0.255.255 10.0.0.0 0.255.255.255
access-list 101 permit ip 10.4.0.0 0.0.255.255 any
access-list 102 permit icmp any host 2.2.2.2
access-list 103 permit ip 10.4.0.0 0.0.255.255 10.0.0.0 0.255.255.255
dialer-list 1 protocol ip list 1
dialer-list 2 protocol ip permit
!
!
route-map track-primary-if permit 10
 match ip address 102
 set interface Dialer2
!
route-map nat2dsl permit 10
 match ip address 101
 match interface Dialer2
!
route-map nat2cell permit 10
 match ip address 101
 match interface Cellular0/3/0
!
line 0/3/0
 exec-timeout 0 0
 script dialer lte
 login
 modem InOut
```

Note For service providers using a private IP address, use the **crypto ipsec transform-set esp** command (that is, esp-aes esp-sha256-hmac...).

SIM Configuration: Examples

Locking the SIM Card: Example

The following example shows how to lock the SIM. The italicized text in this configuration example is used to indicate comments and are not be seen when a normal console output is viewed.

```
Device# sh cellular 0/0/0 security
Card Holder Verification (CHV1) = Disabled
SIM Status = OK
SIM User Operation Required = None
Number of CHV1 Retries remaining = 3
Device#!! SIM is in unlocked state.!Device# cellular 0/0/0 lte sim lock 1111
!!!WARNING: SIM will be locked with pin=1111(4).
Do not enter new PIN to lock SIM. Enter PIN that the SIM is configured with.
Call will be disconnected!!!
Are you sure you want to proceed?[confirm]
Device#
Apr 26 19:35:28.339: %CELLWAN-2-MODEM_DOWN: Modem in HWIC slot 0/0 is DOWN
Apr 26 19:35:59.967: %CELLWAN-2-MODEM_UP: Modem in HWIC slot 0/0 is now UP
Device#
Device# sh cellular 0/0/0 security
Card Holder Verification (CHV1) = Enabled
SIM Status = Locked
SIM User Operation Required = Enter CHV1
Number of CHV1 Retries remaining = 3
Device#!! SIM is in locked state.!
```

Unlocking the SIM Card: Example

The following example shows how to unlock the SIM. The italicized text throughout this configuration example is used to indicate comments and will not be seen when a normal console output is viewed.

```
Device# sh cellular 0/0/0 security
Card Holder Verification (CHV1) = Enabled
SIM Status = Locked
SIM User Operation Required = Enter CHV1
Number of CHV1 Retries remaining = 3
Device#!! SIM is in locked state.!Device# cellular 0/0/0 lte sim unlock 1111
!!!WARNING: SIM will be unlocked with pin=1111(4).
Do not enter new PIN to unlock SIM. Enter PIN that the SIM is configured with.
Call will be disconnected!!!
Are you sure you want to proceed?[confirm]
Device#
Device# sh cellular 0/0/0 security
Card Holder Verification (CHV1) = Disabled
SIM Status = OK
SIM User Operation Required = None
Number of CHV1 Retries remaining = 3
Device#!! SIM is in unlocked state.!
```

Automatic SIM Authentication: Example

The following example shows how to configure automatic SIM authentication. The italicized text throughout this configuration example is used to indicate comments and will not be seen when a normal console output is viewed.

```
Device# show cellular 0/0/0 security
Card Holder Verification (CHV1) = Disabled
SIM Status = OK
SIM User Operation Required = None
Number of CHV1 Retries remaining = 3
Device#!! SIM is in unlocked state.!Device# cellular 0/0/0 lte sim lock 1111
!!!WARNING: SIM will be locked with pin=1111(4).
Do not enter new PIN to lock SIM. Enter PIN that the SIM is configured with.
Call will be disconnected!!!
Are you sure you want to proceed?[confirm]
Device#
Apr 26 21:22:34.555: %CELLWAN-2-MODEM_DOWN: Modem in HWIC slot 0/0 is DOWN
Apr 26 21:23:06.495: %CELLWAN-2-MODEM_UP: Modem in HWIC slot 0/0 is now UP
Device#
Device# sh cellular 0/0/0 security
Card Holder Verification (CHV1) = Enabled
SIM Status = Locked
SIM User Operation Required = Enter CHV1
Number of CHV1 Retries remaining = 3
Device#!! SIM is in locked state. SIM needs to be in locked state for SIM authentication
to ! work.!Device#
Device# conf term
Enter configuration commands, one per line.  End with CNTL/Z.
Device(config)# controller cellular 0/0
Device(config-controller)# lte sim authenticate 0 1111
CHV1 configured and sent to modem for verification
Device(config-controller)# end
Device#
Apr 26 21:23:50.571: %SYS-5-CONFIG_I: Configured from console by console
Device#
Device# sh cellular 0/0/0 security
Card Holder Verification (CHV1) = Enabled
SIM Status = OK
SIM User Operation Required = None
Number of CHV1 Retries remaining = 3
Device#!! SIM is now in locked state but it can be used for connectivity since authentication
 is ! good. Authentication can be saved in the router configuration so that when you boot
up ! the router with the same locked SIM, connection can be established with the correct !
 Cisco IOS configuration.!
```

Changing the PIN Code: Example

The following example shows how to change the assigned PIN code. The italicized text throughout this configuration example is used to indicate comments and will not be seen when a normal console output is viewed.

```
Device# sh cellular 0/0/0 security
Card Holder Verification (CHV1) = Disabled
SIM Status = OK
SIM User Operation Required = None
Number of CHV1 Retries remaining = 3
Device#!! SIM is in unlocked state.!Device#
Device# cellular 0/0/0 lte sim lock 1111
!!!WARNING: SIM will be locked with pin=1111(4).
Do not enter new PIN to lock SIM. Enter PIN that the SIM is configured with.
```

```
Call will be disconnected!!!
Are you sure you want to proceed?[confirm]
Device#
Apr 26 21:58:11.903: %CELLWAN-2-MODEM_DOWN: Modem in HWIC slot 0/0 is DOWN
Apr 26 21:58:43.775: %CELLWAN-2-MODEM_UP: Modem in HWIC slot 0/0 is now UP
Device#
Device# sh cellular 0/0/0 security
Card Holder Verification (CHV1) = Enabled
SIM Status = Locked
SIM User Operation Required = Enter CHV1
Number of CHV1 Retries remaining = 3
Device#!! SIM is in locked state. SIM needs to be in locked state to change its PIN.!Device#
Device# cellular 0/0/0 lte sim change-pin 1111 0000
!!!WARNING: SIM PIN will be changed from:1111(4) to:0000(4)
Call will be disconnected. If old PIN is entered incorrectly in 3 attempt(s), SIM will be
blocked!!!
Are you sure you want to proceed?[confirm]
Resetting modem, please wait...
CHV1 code change has been completed. Please enter the new PIN in controller configuration
for verfication
Device#
Apr 26 21:59:16.735: %CELLWAN-2-MODEM_DOWN: Modem in HWIC slot 0/0 is DOWN
Apr 26 21:59:48.387: %CELLWAN-2-MODEM_UP: Modem in HWIC slot 0/0 is now UP
Device#
Device#
Device# sh cellular 0/0/0 security
Card Holder Verification (CHV1) = Enabled
SIM Status = Locked
SIM User Operation Required = Enter CHV1
Number of CHV1 Retries remaining = 3
Device#!! SIM stays in locked state, as expected, but with new PIN.!Device# cellular 0/0/0
 lte sim unlock 0000
!!!WARNING: SIM will be unlocked with pin=0000(4).
Do not enter new PIN to unlock SIM. Enter PIN that the SIM is configured with.
Call will be disconnected!!!
Are you sure you want to proceed?[confirm]
Device#
Device# show cellular 0/0/0 security
Card Holder Verification (CHV1) = Disabled
SIM Status = OK
SIM User Operation Required = None
Number of CHV1 Retries remaining = 3
Device#!! Unlock with new PIN is successful. Hence, changing PIN was successful.!
```

Configuring an Encrypted PIN: Example

The following example shows how to configure automatic SIM authentication using an encrypted PIN. The italicized text throughout this configuration example is used to indicate comments and will not be seen when a normal console output is viewed.

```
Device# configure terminal
Enter configuration commands, one per line.  End with CNTL/Z.
Device(config)# service password-encryption
Device(config)# username SIM privilege 0 password 1111
Device(config)# do sh run | i SIM
username SIM privilege 0 password 7 055A575E70.!! Copy the encrypted level 7 PIN. Use this
 scrambled PIN in the SIM authentication ! command.!Device(config)#
Device(config)# controller cellular 0/0
Device(config-controller)# lte sim authenticate 7 055A575E70
CHV1 configured and sent to modem for verification
Device(config-controller)# exit
Device(config)# no username SIM
```

```
Device(config)# end
May 14 20:20:52.603: %SYS-5-CONFIG_I: Configured from console by console
```

SMS Initiated Call Back Configuration: Example

The following example shows how to configure SMS initiated data callback feature on a dialer interface to set up a data connection by sending a text message to the modem and securing the data connection by using the originating (caller's) number to eliminate unauthorized callback requests.

Note The "14001234567" phone number in the example below is the incoming caller's number.

```
chat-script lte "" "AT!CALL" TIMEOUT 20 "OK"
interface Cellular0/0/0
ip address negotiated
encapsulation slip
dialer in-band
dialer pool-member 1
async mode interactive
routing dynamic
!
interface Dialer1
ip address negotiated
encapsulation slip
dialer pool 1
dialer idle-timeout 0
dialer string lte
dialer caller 14001234567 callback
dialer-group 1
!
ip route 172.22.1.10 255.255.255.255 Cellular0/0/0
dialer-list 1 protocol ip permit
!
       line 0/0/0
       script dialer LTE
       modem InOut
       no exec
       transport input all
       transport output all
```

Dialer-Watch Configuration without External Dialer Interface: Example

The following example shows how to configure the dialer-watch without external dialer interface. The bold text is used to indicate important commands that are specific to the dialer-watch:

```
chat-script lte "" "AT!CALL1" TIMEOUT 20 "OK"
interface Cellular0
ip address negotiated
encapsulation slip
dialer in-band
dialer string LTE
dialer watch-group 1
async mode interactive
!
dialer watch-list 1 ip 5.6.7.8 0.0.0.0
dialer watch-list 1 delay route-check initial 60
dialer watch-list 1 delay connect 1
```

```
!
ip route 0.0.0.0 0.0.0.0 cellular 0
line 3
script dialer LTE
modem InOut
no exec
transport input all
transport output all
```

Dialer-Persistent Configuration with External Dialer Interface: Example

The following example shows how to configure the dialer-persistent with external dialer interface. The bold text is used to indicate important commands that are specific to the dialer-persistent:

```
interface Cellular0
ip address negotiated
encapsulation slip
dialer in-band
dialer pool-member 1

async mode interactive
routing dynamic
interface Dialer1
ip address negotiated
encapsulation slip
dialer pool 1
dialer idle-timeout 0
dialer string lte
dialer persistent
dialer-group 1
!
dialer-list 1 protocol ip permit
ip route 0.0.0.0 0.0.0.0 dialer 1
line 3
script dialer lte
modem InOut
no exec
transport input all
transport output all
```

Example: Configuring Multiple PDN

The following example shows how to configure multiple PDN:

```
chat-script lte "" "AT!CALL" TIMEOUT 20 "OK"
!
interface Cellular0
ip address negotiated
encapsulation slip
dialer in-band
dialer idle-timeout 0
dialer string lte
dialer-group 1
no peer default ip address
async mode interactive
routing dynamic
!
interface Cellular1
ip address negotiated
encapsulation slip
```

```
dialer in-band
dialer idle-timeout 0
dialer string lte
dialer-group 1
!
ip route 141.141.141.141 255.255.255.255 Cellular1
ip route 192.169.187.254 255.255.255.255 Cellular0
!
line 3
exec-timeout 0 0 script dialer lte
modem InOut
no exec
transport input all
transport output all
rxspeed 100000000
txspeed 50000000
!
line 8
script dialer lte
modem InOut
no exec
transport input all
transport output all
rxspeed 100000000
txspeed 50000000
```

The following show commands can be used to verify the status of the multiple PDN calls:

```
C800-router#sh cellular 0 profile
Profile 1 = ACTIVE* **
--------
PDP Type = IPv4
PDP address = 21.21.21.204
Access Point Name (APN) = basic
Authentication = None
Primary DNS address = 171.70.168.183
Secondary DNS address = 173.36.131.10
Profile 2 = ACTIVE
--------
PDP Type = IPv4
PDP address = 22.22.22.111
Access Point Name (APN) = mpdn
Authentication = None
Primary DNS address = 171.70.168.183
Secondary DNS address = 173.36.131.10
Profile 3 = INACTIVE
--------PDP Type = IPv4
Access Point Name (APN) = aaaauth
Authentication = None
Profile 4 = INACTIVE
--------
PDP Type = IPv4
Access Point Name (APN) = basic2
Authentication = None
 * - Default profile
 ** - LTE attach profile
Configured default profile for active SIM 0 is profile 1.
C800-router#sh cellular 0 connection
Profile 1, Packet Session Status = ACTIVE
Cellular0:
Data Transmitted = 600 bytes, Received = 500 bytes
IP address = 21.21.21.204
Primary DNS address = 171.70.168.183
Secondary DNS address = 173.36.131.10
```

```
Profile 2, Packet Session Status = ACTIVE
Cellular1:
Data Transmitted = 1800 bytes, Received = 1800 bytes
IP address = 22.22.22.111
Primary DNS address = 171.70.168.183
Secondary DNS address = 173.36.131.10
Profile 3, Packet Session Status = INACTIVE
Profile 4, Packet Session Status = INACTIVE
Profile 5, Packet Session Status = INACTIVE
Profile 6, Packet Session Status = INACTIVE
Profile 7, Packet Session Status = INACTIVE
Profile 8, Packet Session Status = INACTIVE
Profile 9, Packet Session Status = INACTIVE
Profile 10, Packet Session Status = INACTIVE
Profile 11, Packet Session Status = INACTIVE
Profile 12, Packet Session Status = INACTIVE
Profile 13, Packet Session Status = INACTIVE
Profile 14, Packet Session Status = INACTIVE
Profile 15, Packet Session Status = INACTIVE
Profile 16, Packet Session Status = INACTIVE
C800-router#sh ip interface brief
Interface             IP-Address      OK? Method Status          Protocol
Cellular0               21.21.21.204   YES IPCP   up               up
Cellular1               22.22.22.111   YES IPCP   up               up
FastEthernet0        unassigned      YES unset  up               up
FastEthernet1        unassigned      YES unset  down           down
FastEthernet2        unassigned      YES unset  down           down
FastEthernet3        unassigned      YES unset  down           down
GigabitEthernet0    unassigned     YES NVRAM  down        down
Loopback0            1.1.1.1             YES NVRAM  up             up
Serial0                  unassigned       YES NVRAM  administratively down down
Vlan1                      5.13.1.22       YES NVRAM  up              up
Vlan2                      72.119.152.9 YES NVRAM  down          down

C800-router#show ip dns view
DNS View default parameters:
Logging is off
DNS Resolver settings:
  Domain lookup is disabled
  Default domain name:
  Domain search list:
  Lookup timeout: 3 seconds
  Lookup retries: 2
  Domain name-servers:
171.70.168.183
173.36.131.10
 DNS Server settings:
   Forwarding of queries is disabled
   Forwarder timeout: 3 seconds
   Forwarder retries: 2 C800-router#sh cellular 0 profile
Profile 1 = ACTIVE* **
--------
PDP Type = IPv4
PDP address = 21.21.21.204
Access Point Name (APN) = basic
Authentication = None
Primary DNS address = 171.70.168.183
Secondary DNS address = 173.36.131.10
Profile 2 = ACTIVE
--------
PDP Type = IPv4
PDP address = 22.22.22.111
Access Point Name (APN) = mpdn
Authentication = None
```

```
Primary DNS address = 171.70.168.183
Secondary DNS address = 173.36.131.10
Profile 3 = INACTIVE
--------PDP Type = IPv4
Access Point Name (APN) = aaaauth
Authentication = None
Profile 4 = INACTIVE
--------
PDP Type = IPv4
Access Point Name (APN) = basic2
Authentication = None
 * - Default profile
 ** - LTE attach profile
Configured default profile for active SIM 0 is profile 1.
C800-router#sh cellular 0 connection
Profile 1, Packet Session Status = ACTIVE
Cellular0:
Data Transmitted = 600 bytes, Received = 500 bytes
IP address = 21.21.21.204
Primary DNS address = 171.70.168.183
Secondary DNS address = 173.36.131.10
Profile 2, Packet Session Status = ACTIVE
Cellular1:
Data Transmitted = 1800 bytes, Received = 1800 bytes
IP address = 22.22.22.111
Primary DNS address = 171.70.168.183
Secondary DNS address = 173.36.131.10
Profile 3, Packet Session Status = INACTIVE
Profile 4, Packet Session Status = INACTIVE
Profile 5, Packet Session Status = INACTIVE
Profile 6, Packet Session Status = INACTIVE
Profile 7, Packet Session Status = INACTIVE
Profile 8, Packet Session Status = INACTIVE
Profile 9, Packet Session Status = INACTIVE
Profile 10, Packet Session Status = INACTIVE
Profile 11, Packet Session Status = INACTIVE
Profile 12, Packet Session Status = INACTIVE
Profile 13, Packet Session Status = INACTIVE
Profile 14, Packet Session Status = INACTIVE
Profile 15, Packet Session Status = INACTIVE
Profile 16, Packet Session Status = INACTIVE
C800-router#sh ip interface brief
Interface             IP-Address      OK? Method Status          Protocol
Cellular0               21.21.21.204   YES IPCP   up               up
Cellular1               22.22.22.111   YES IPCP   up               up
FastEthernet0        unassigned      YES unset  up               up
FastEthernet1        unassigned      YES unset  down           down
FastEthernet2        unassigned      YES unset  down           down
FastEthernet3        unassigned      YES unset  down           down
GigabitEthernet0    unassigned     YES NVRAM  down        down
Loopback0            1.1.1.1             YES NVRAM  up             up
Serial0                  unassigned       YES NVRAM  administratively down down
Vlan1                      5.13.1.22       YES NVRAM  up              up
Vlan2                      72.119.152.9 YES NVRAM  down          down

C800-router#show ip dns view
DNS View default parameters:
Logging is off
DNS Resolver settings:
  Domain lookup is disabled
  Default domain name:
  Domain search list:
  Lookup timeout: 3 seconds
  Lookup retries: 2
```

```
  Domain name-servers:
171.70.168.183
173.36.131.10
 DNS Server settings:
   Forwarding of queries is disabled
   Forwarder timeout: 3 seconds
   Forwarder retries: 2
   Forwarder addresses:
 Forwarder addresses:
```

MC7700 Manual Modem Firmware Upgrade: Example

```
Device# microcode reload cellular 0 0 modem-provision flash:MC7700_ATT_03.05.10.02_00.cwe

Reload microcode? [confirm]
Log status of firmware download in router flash?[confirm]
Firmware download status will be logged in flash:fwlogfile
Microcode Reload Process launched for Cellular 37946756; hw type = 0x6F3
Device#
****************************************************
 The interface will be Shut Down for Firmware Upgrade
 This will terminate any active data connections.
****************************************************
Modem radio has been turned off
****************************************************
 Modem will be upgraded!
 Upgrade process will take up to 15 minutes. During
 this time the modem will be unusable.
 Please do not remove power or reload the router during
 the upgrade process.
****************************************************
Sending F/W[MC7700_ATT_03.05.10.02_00.cwe] to the card [41569157 bytes]:
Firmware file: MC7700_ATT_03.05.10.02_00.cwe sent to the card
The current modem F/W App Version: SWI9200X_01.00.03.01AP R2492 CARMD-EN-10526 2011/07/01
19:31:09
The current modem F/W Boot Version: SWI9200X_01.00.03.01BT R2492 CARMD-EN-10526 2011/07/01
 19:28:52
The current modem Carrier String: 5
The current modem Device ID: MC7700
The current modem Package Identifier: MC7700_01.00.03.01_00_vzw_020.006_001
The current modem SKU ID: 1584083
FW UPgrade: In the progress.
*Feb 21 23:39:35.407: %CISCO800-2-MODEM_DOWN: Cellular0 modem is now DOWN.
F/W Upgrade: Complete Successfully
*Feb 21 23:42:00.475: %CISCO800-2-MODEM_UP: Cellular0 modem is now UP.
*Feb 21 23:42:00.475: %CISCO800-2-MODEM_DOWN: Cellular0 modem is now DOWN.
*Feb 21 23:42:05.475: %CISCO800-2-MODEM_UP: Cellular0 modem is now UP.
Modem radio has been turned on
Device#show cellular 0 hardware | incl Modem Firmware Version
Modem Firmware Version = SWI9200X_03.05.10.02
```

MC7710 Manual Modem Firmware Upgrade: Example

```
Device# microcode reload cellular 0 0 modem-provision  flash:MC7710_Global_03.05.19.04_00.cwe
Reload microcode? [confirm] <hit enter key>
Log status of firmware download in router flash?[confirm] <hit enter key>
Firmware download status will be logged in flash:fwlogfile
Microcode Reload Process launched for Cellular 37946756; hw type = 0x6F3
Device#
****************************************************
 The interface will be Shut Down for Firmware Upgrade
```

```
 This will terminate any active data connections.
****************************************************
Modem radio has been turned off
****************************************************
 Modem will be upgraded!
 Upgrade process will take up to 15 minutes. During
 this time the modem will be unusable.
 Please do not remove power or reload the router during
 the upgrade process.
****************************************************
Sending F/W[MC7710_Global_03.05.19.04_00.cwe] to the card [41569157 bytes]:
Firmware file: MC7710_Global_03.05.19.04_00.cwe sent to the card
The current modem F/W App Version: SWI9200X_03.00.11.00AP R2492 CARMD-EN-10526 2011/07/01
19:31:09
The current modem F/W Boot Version: SWI9200X_03.00.11.00BT R2492 CARMD-EN-10526 2011/07/01
 19:28:52
The current modem Carrier String: 5
The current modem Device ID: MC7710
The current modem Package Identifier: MC7710_03.00.11.00_00_vzw_020.006_001
The current modem SKU ID: 1584083
FW UPgrade: In the progress.
*Feb 21 23:39:35.407: %CISCO800-2-MODEM_DOWN: Cellular0 modem is now DOWN.
F/W Upgrade: Complete Successfully
*Feb 21 23:42:00.475: %CISCO800-2-MODEM_UP: Cellular0 modem is now UP.
*Feb 21 23:42:00.475: %CISCO800-2-MODEM_DOWN: Cellular0 modem is now DOWN.
*Feb 21 23:42:05.475: %CISCO800-2-MODEM_UP: Cellular0 modem is now UP.
Modem radio has been turned on
Device# show cellular 0 hardware | incl Modem Firmware Version
Modem Firmware Version = SWI9200X_03.05.19.04
```

MC7750 Manual Modem Firmware Upgrade: Example

```
Device# microcode reload cellular 0 0 modem-provision  flash:MC7750_VZW_03.05.10.06_00.cwe

Reload microcode? [confirm] <hit enter key>
Log status of firmware download in router flash?[confirm] <hit enter key>
Firmware download status will be logged in flash:fwlogfile
Microcode Reload Process launched for Cellular 37946756; hw type = 0x6F3
Device#
****************************************************
 The interface will be Shut Down for Firmware Upgrade
 This will terminate any active data connections.
****************************************************
Modem radio has been turned off
****************************************************
 Modem will be upgraded!
 Upgrade process will take up to 15 minutes. During
 this time the modem will be unusable.
 Please do not remove power or reload the router during
 the upgrade process.
****************************************************
Sending F/W[MC7750_VZW_03.05.10.06_00.cwe] to the card [41569157 bytes]:
Firmware file: MC7750_VZW_03.05.10.06_00.cwe sent to the card
The current modem F/W App Version: SWI9600M_01.00.09.03AP R2492 CARMD-EN-10526 2011/07/01
19:31:09
The current modem F/W Boot Version: SWI9600M_01.00.09.03BT R2492 CARMD-EN-10526 2011/07/01
 19:28:52
The current modem Carrier String: 5
The current modem Device ID: MC7750
The current modem Package Identifier: MC7750_01.00.09.03_00_vzw_020.006_001
The current modem SKU ID: 1584083
FW UPgrade: In the progress.
```

```
*Feb 21 23:39:35.407: %CISCO800-2-MODEM_DOWN: Cellular0 modem is now DOWN.
F/W Upgrade: Complete Successfully
*Feb 21 23:42:00.475: %CISCO800-2-MODEM_UP: Cellular0 modem is now UP.
*Feb 21 23:42:00.475: %CISCO800-2-MODEM_DOWN: Cellular0 modem is now DOWN.
*Feb 21 23:42:05.475: %CISCO800-2-MODEM_UP: Cellular0 modem is now UP.
Modem radio has been turned on
Device#show cellular 0 hardware | incl Modem Firmware Version
Modem Firmware Version = SWI9600M_03.05.10.06
```

EEM Script 1 for MC7700 Modem

```
event manager applet FW authorization bypass
event none maxrun 1200
action 1.0 if $_none_argc ne "1"
action 1.0.1  syslog msg "Incorrect number of arguments passed. Please check and try again"
action 1.0.2 exit
action 1.0.3 end
action 1.1 cli command "enable"
action 1.2 set slot_number "$_none_arg1"
action 1.3 cli command "show version | incl System image file"
action 1.3.1 regexp "(.*)c(.*)-universalk9-(.*)\"" "$_cli_result" _match _sub1 _sub2 _sub3
action 1.3.2 set platform "$_sub2"
action 1.3.3 set current_IOS "c$_sub2-universalk9-$_sub3"
action 1.3.4 set old_IOS "c$platform-universalk9-mz.SPA.152-4.M2"
action 1.3.5 set new_IOS "c$platform-universalk9-mz.SPA.152-4.M3"
action 1.3.6 set firmware "MC7700_ATT_03.05.10.02_00.cwe"
action 1.3.7 set old_firmware "SWI9200X_01.00.03.01"
action 1.3.8 set new_firmware "SWI9200X_03.05.10.02"
action 1.4 if $platform eq "800"
action 1.4.1 set cellular_interface 0
action 1.5 else
action 1.5.1 set cellular_interface "0/$slot_number/0"
action 1.5.2 end
action 1.6 cli command "show cellular $cellular_interface hardware | incl Modem Firmware
Version"
action 1.7 string first "$new_firmware" "$_cli_result"
action 1.8 if $_string_result ge 0
action 1.8.1 syslog msg "Modem is already on new firmware $new_firmware. Exiting upgrade!!"
action 1.8.2 exit
action 1.8.3 end
action 2.1 if $current_IOS ne $old_IOS
action 2.1.1 syslog msg "Current IOS version is incorrect. Please run $old_IOS before
starting upgrade. Exiting upgrade!!"
action 2.1.2 exit
action 2.2 end
action 2.3 cli command "show flash: | incl $new_IOS"
action 3.0 string first "$new_IOS" "$_cli_result"
action 3.1 if $_string_result lt 0
action 3.1.1 syslog msg "$new_IOS is not present in flash. Exiting upgrade!!"
action 3.1.2 exit
action 3.2 end
action 3.3 cli command "show flash: | incl $firmware"
action 5.0  string first "$firmware" "$_cli_result"
action 5.1 if $_string_result lt 0
action 5.1.1 syslog msg "$firmware is not present in flash. Exiting upgrade!!"
action 5.1.2 exit
action 5.2 end
action 5.3 cli command "configure terminal"
action 5.4 cli command "no boot system"
action 5.5 cli command "end"
action 6.1 cli command "microcode reload cellular 0 $slot_number modem-provision
flash:$firmware" pattern "confirm"
```

```
action 6.2 cli command "y"
action 6.3 wait 400
action 6.4 cli command "event manager run router_reload $old_IOS $new_IOS $old_firmware
$cellular_interface"
action 6.5 wait 120
action 6.6 exit
```

EEM Script 2 for MC7700 Modem

```
event manager applet router_reload authorization bypass
event none maxrun 120
action 1.0 set old_IOS "$_none_arg1"
action 1.1 set new_IOS "$_none_arg2"
action 1.2 set old_firmware "$_none_arg3"
action 1.3 set cellular_interface "$_none_arg4"
action 1.4 cli command "enable"
action 2.0 cli command "show cellular $cellular_interface hardware | inc Modem Firmware
Version"
action 2.1 set _string_result "0"
action 2.2 string first "$old_firmware" "$_cli_result"
action 2.3 if $_string_result ge "0"
action 2.3.1 set boot_IOS "$old_IOS"
action 2.3.2 syslog msg "Firmware did not Upgrade successfully. Please try again after
reload"
action 2.4 else
action 2.4.1 set boot_IOS "$new_IOS"
action 2.4.2 syslog msg "Firmware upgraded successfully. value= $_string_result"
action 2.4.3 end
action 2.5 cli command "configure terminal"
action 2.5.1 cli command "boot system flash:$boot_IOS"
action 2.5.2 cli command "config-register 0x2102"
action 2.5.3 cli command "interface cellular $cellular_interface"
action 2.5.4 cli command "no shut"
action 2.5.5 cli command "end"
action 2.5.6 cli command "write memory"
action 2.5.7 reload
```

EEM Script 1 for MC7710 Modem

```
event manager applet FW authorization bypass
event none maxrun 1200
action 1.0 if $_none_argc ne "1"
action 1.0.1  syslog msg "Incorrect number of arguments passed. Please check and try again"
action 1.0.2 exit
action 1.0.3 end
action 1.1 cli command "enable"
action 1.2 set slot_number "$_none_arg1"
action 1.3 cli command "show version | incl System image file"
action 1.3.1 regexp "(.*)c(.*)-universalk9-(.*)\"" "$_cli_result" _match _sub1 _sub2 _sub3
action 1.3.2 set platform "$_sub2"
action 1.3.3 set current_IOS "c$_sub2-universalk9-$_sub3"
action 1.3.4 set old_IOS "c$platform-universalk9-mz.SPA.152-4.M2"
action 1.3.5 set new_IOS "c$platform-universalk9-mz.SPA.152-4.M3"
action 1.3.6 set firmware "MC7710_Global_03.05.19.04_00.cwe"
action 1.3.7 set old_firmware "SWI9200X_03.00.11.00"
action 1.3.8 set new_firmware "SWI9200X_03.05.19.04"
action 1.4 if $platform eq "800"
action 1.4.1 set cellular_interface 0
action 1.5 else
action 1.5.1 set cellular_interface "0/$slot_number/0"
action 1.5.2 end
```

```
action 1.6 cli command "show cellular $cellular_interface hardware | incl Modem Firmware
Version"
action 1.7 string first "$new_firmware" "$_cli_result"
action 1.8 if $_string_result ge 0
action 1.8.1 syslog msg "Modem is already on new firmware $new_firmware. Exiting upgrade!!"
action 1.8.2 exit
action 1.8.3 end
action 2.1 if $current_IOS ne $old_IOS
action 2.1.1 syslog msg "Current IOS version is incorrect. Please run $old_IOS before
starting upgrade. Exiting upgrade!!"
action 2.1.2 exit
action 2.2 end
action 2.3 cli command "show flash: | incl $new_IOS"
action 3.0 string first "$new_IOS" "$_cli_result"
action 3.1 if $_string_result lt 0
action 3.1.1 syslog msg "$new_IOS is not present in flash. Exiting upgrade!!"
action 3.1.2 exit
action 3.2 end
action 3.3 cli command "show flash: | incl $firmware"
action 5.0  string first "$firmware" "$_cli_result"
action 5.1 if $_string_result lt 0
action 5.1.1 syslog msg "$firmware is not present in flash. Exiting upgrade!!"
action 5.1.2 exit
action 5.2 end
action 5.3 cli command "configure terminal"
action 5.4 cli command "no boot system"
action 5.5 cli command "end"
action 6.1 cli command "microcode reload cellular 0 $slot_number modem-provision
flash:$firmware" pattern "confirm"
action 6.2 cli command "y"
action 6.3 wait 400
action 6.4 cli command "event manager run router_reload $old_IOS $new_IOS $old_firmware
$cellular_interface"
action 6.5 wait 120
action 6.6 exit
```

EEM Script 2 for MC7710 Modem

```
event manager applet router_reload authorization bypass
event none maxrun 120
action 1.0 set old_IOS "$_none_arg1"
action 1.1 set new_IOS "$_none_arg2"
action 1.2 set old_firmware "$_none_arg3"
action 1.3 set cellular_interface "$_none_arg4"
action 1.4 cli command "enable"
action 2.0 cli command "show cellular $cellular_interface hardware | inc Modem Firmware
Version"
action 2.1 set _string_result "0"
action 2.2 string first "$old_firmware" "$_cli_result"
action 2.3 if $_string_result ge "0"
action 2.3.1 set boot_IOS "$old_IOS"
action 2.3.2 syslog msg "Firmware did not Upgrade successfully. Please try again after
reload"
action 2.4 else
action 2.4.1 set boot_IOS "$new_IOS"
action 2.4.2 syslog msg "Firmware upgraded successfully. value= $_string_result"
action 2.4.3 end
action 2.5 cli command "configure terminal"
action 2.5.1 cli command "boot system flash:$boot_IOS"
action 2.5.2 cli command "config-register 0x2102"
action 2.5.3 cli command "interface cellular $cellular_interface"
action 2.5.4 cli command "no shut"
```

```
action 2.5.5 cli command "end"
action 2.5.6 cli command "write memory"
action 2.5.7 reload
```

EEM Script 1 for MC7750 Modem

```
event manager applet FW authorization bypass
event none maxrun 1200
action 1.0 if $_none_argc ne "1"
action 1.0.1  syslog msg "Incorrect number of arguments passed. Please check and try again"
action 1.0.2 exit
action 1.0.3 end
action 1.1 cli command "enable"
action 1.2 set slot_number "$_none_arg1"
action 1.3 cli command "show version | incl System image file"
action 1.3.1 regexp "(.*)c(.*)-universalk9-(.*)\"" "$_cli_result" _match _sub1 _sub2 _sub3
action 1.3.2 set platform "$_sub2"
action 1.3.3 set current_IOS "c$_sub2-universalk9-$_sub3"
action 1.3.4 set old_IOS "c$platform-universalk9-mz.SSA.V152_4_M_LTE"
action 1.3.5 set new_IOS "c$platform-universalk9-mz.SPA.152-4.M3"
action 1.3.6 set firmware "MC7750_VZW_03.05.10.06_00.cwe"
action 1.3.7 set old_firmware "SWI9600M_01.00.09.03"
action 1.3.8 set new_firmware "SWI9600M_03.05.10.06"
action 1.4 if $platform eq "800"
action 1.4.1 set cellular_interface 0
action 1.5 else
action 1.5.1 set cellular_interface "0/$slot_number/0"
action 1.5.2 end
action 1.6 cli command "show cellular $cellular_interface hardware | incl Modem Firmware
Version"
action 1.7 string first "$new_firmware" "$_cli_result"
action 1.8 if $_string_result ge 0
action 1.8.1 syslog msg "Modem is already on new firmware $new_firmware. Exiting upgrade!!"
action 1.8.2 exit
action 1.8.3 end
action 2.1 if $current_IOS ne $old_IOS
action 2.1.1 syslog msg "Current IOS version is incorrect. Please run $old_IOS before
starting upgrade. Exiting upgrade!!"
action 2.1.2 exit
action 2.2 end
action 2.3 cli command "show flash: | incl $new_IOS"
action 3.0 string first "$new_IOS" "$_cli_result"
action 3.1 if $_string_result lt 0
action 3.1.1 syslog msg "$new_IOS is not present in flash. Exiting upgrade!!"
action 3.1.2 exit
action 3.2 end
action 3.3 cli command "show flash: | incl $firmware"
action 5.0  string first "$firmware" "$_cli_result"
action 5.1 if $_string_result lt 0
action 5.1.1 syslog msg "$firmware is not present in flash. Exiting upgrade!!"
action 5.1.2 exit
action 5.2 end
action 5.3 cli command "configure terminal"
action 5.4 cli command “no boot system”
action 5.5 cli command “end”
action 6.1 cli command "microcode reload cellular 0 $slot_number modem-provision
flash:$firmware" pattern "confirm"
action 6.2 cli command "y"
action 6.3 wait 400
action 6.4 cli command "event manager run router_reload $old_IOS $new_IOS $old_firmware
$cellular_interface"
```

```
action 6.5 wait 120
action 6.6 exit
```

EEM Script 2 for MC7750 Modem

```
event manager applet router_reload authorization bypass
event none maxrun 120
action 1.0 set old_IOS "$_none_arg1"
action 1.1 set new_IOS "$_none_arg2"
action 1.2 set old_firmware "$_none_arg3"
action 1.3 set cellular_interface "$_none_arg4"
action 1.4 cli command "enable"
action 2.0 cli command "show cellular $cellular_interface hardware | inc Modem Firmware
Version"
action 2.1 set _string_result "0"
action 2.2 string first "$old_firmware" "$_cli_result"
action 2.3 if $_string_result ge "0"
action 2.3.1 set boot_IOS "$old_IOS"
action 2.3.2 syslog msg "Firmware did not Upgrade successfully. Please try again after
reload"
action 2.4 else
action 2.4.1 set boot_IOS "$new_IOS"
action 2.4.2 syslog msg "Firmware upgraded successfully. value= $_string_result"
action 2.4.3 end
action 2.5 cli command "configure terminal"
action 2.5.1 cli command "boot system flash:$boot_IOS"
action 2.5.2 cli command "config-register 0x2102"
action 2.5.3 cli command “interface cellular $cellular_interface”
action 2.5.4 cli command “no shut”
action 2.5.5 cli command "end"
action 2.5.6 cli command "write memory"
action 2.5.7 reload
```

Example: Upgrading MC7430 Modem Firmware File and Carrier PRI file

This example shows the firmware and carrier file upgrade of MC7430 modem the using the **microcode reload cellular** command. In this example, firmware files are downloaded to the Package_02.14.03.00_Telstra_002.013_000 directory.

```
Router_2951# microcode reload cellular 0 0 modem-provision flash:
Package_02.14.03.00_Telstra_002.013_000
Reload microcode? [confirm]
Log status of firmware download in router flash?[confirm]
Firmware download status will be logged in flash0:fwlogfile
Microcode Reload Process launched for hwic slot=0; hw type=0x721
Router_2951#
****************************************************
 The interface will be Shut Down for Firmware Upgrade
 This will terminate any active data connections.
****************************************************
Sending cmd=ifconfig eth0 20.20.20.2 up to Linux
****************************************************
 Modem will be upgraded!
 Upgrade process will take up to 15 minutes. During
 this time the modem will be unusable.
 Please do not remove power or reload the router during
 the upgrade process.
****************************************************
Router_2951#
*Jan 28 09:51:05.577 PST: %LINK-3-UPDOWN: Interface Ethernet0/0, changed state to up
```

```
UA_2951#
*Jan 28 09:51:06.577 PST: %LINEPROTO-5-UPDOWN: Line protocol on Interface Ethernet0/0,
changed state to up
*Jan 28 09:51:07.561 PST: %LINK-5-CHANGED: Interface Cellular0/0/0, changed state to
administratively down
*Jan 28 09:51:07.565 PST: %LINK-5-CHANGED: Interface Cellular0/0/1, changed state to
administratively down
*Jan 28 09:51:07.565 PST: %LINK-5-CHANGED: Interface Cellular0/0/3, changed state to
administratively down
Router_2951#
The current modem F/W App Version: SWI9X30C_02.05.07.00
The current modem F/W Boot Version: SWI9X30C_02.05.07.00
The current modem Carrier String: 1
The current modem Device ID: MC7430
The current modem Package Identifier:
The current modem SKU ID: 1102644
Router_2951#
Firmware Upgrade is in Progress...
Router_2951#
*Jan 28 09:51:27.105 PST: %CELLWAN-2-MODEM_DOWN: Modem in HWIC slot 0/0 is DOWN
Router_2951#
F/W Upgrade: Firmware Upgrade has Completed Successfully
```

Example: Upgrading MC7430 Modem Carrier PRI File

This example shows the carrier PRI file upgrade of MC7430 modem the using the **microcode reload cellular** command. In this example, firmware files are downloaded to the Package_02.14.03.00_Telstra_002.013_000 directory.

```
C897# microcode reload cellular 0 0 modem-provision flash:02.08.02_FW_Telstra
Reload microcode? [confirm]
Log status of firmware download in router flash?[confirm]
Firmware download status will be logged in flash:fwlogfile
Microcode Reload Process launched for Cellular 284460980; hw type = 0x6F3
C897#
*****************************************************
 The interface will be Shut Down for Firmware Upgrade
 This will terminate any active data connections.
*****************************************************
*Jan 28 10:16:13.751 PST: %LINK-5-CHANGED: Interface Cellular0, changed state to reset
*Jan 28 10:16:14.751 PST: %LINEPROTO-5-UPDOWN: Line protocol on Interface Cellular0, changed
 state to down
C897#
*Jan 28 10:16:18.759 PST: %LINK-5-CHANGED: Interface Cellular0, changed state to
administratively down
C897#
*****************************************************
 Modem will be upgraded!
 Upgrade process will take up to 15 minutes. During
 this time the modem will be unusable.
 Please do not remove power or reload the router during
 the upgrade process.
*****************************************************
The current modem F/W App Version: SWI9X30C_02.08.02.00
The current modem F/W Boot Version: SWI9X30C_02.08.02.00
The current modem Carrier String: 1
The current modem Device ID: MC7430
The current modem Package Identifier:
The current modem SKU ID: 1102644
C897#
*Jan 28 10:16:21.759 PST: %CELLWAN-2-BEARER_DELETED: Instance id=0, Default bearer
(bearer_id=5) in Cellular0 is now deleted.
```

```
Firmware Upgrade is in Progress...
C897#
*Jan 28 10:16:23.759 PST: %LINK-5-CHANGED: Interface Cellular1, changed state to
administratively down
C897#
*Jan 28 10:16:40.035 PST: %CISCO800-2-MODEM_DOWN: Cellular0 modem is now DOWN.
C897#
*Jan 28 10:16:44.535 PST: %USB_HOST_STACK-5-USB_ENUM_UNSUPPORTED_DEVICE: Unsupported device
 inserted. Host id 1, Device Addr 33722880.
C897#
*Jan 28 10:16:45.387 PST: %CISCO800-2-MODEM_DOWN: Cellular0 modem is now DOWN.
C897#
F/W Upgrade: Firmware Upgrade has Completed Successfully
```

SNMP 4G LTE Configuration: Example

The following example describes how to configure SNMP capability on the router:

```
snmp-server group neomobilityTeam v3 auth notify 3gView
snmp-server view 3gView ciscoWan3gMIB included
snmp-server community neomobility-test RW
snmp-server community public RW
snmp-server enable traps c3g
snmp-server host 172.19.153.53 neomobility  c3g
snmp-server host 172.19.152.77 public  c3g
snmp-server host 172.19.152.77 public udp-port 6059
```

The following example describes how to configure an external host device to communicate with the router through SNMP:

```
setenv SR_MGR_CONF_DIR /users/<userid>/mibtest
setenv SR_UTIL_COMMUNITY neomobility-test
setenv SR_UTIL_SNMP_VERSION -v2c
setenv SR_TRAP_TEST_PORT 6059
```

Additional References

Related Documents

Related Topic	Document Title
Cisco IOS commands	• Cisco IOS Master Commands List, All Releases • Configuring Cisco EHWIC and 880G for 3G (EV-DO Rev A) • Configuring 3G Wireless WAN on Modular and Fixed ISRs (HWIC-3G-CDMA, HWIC-3G-CDMA-x, and PCEX-3G-CDMA-x)
4G LTE EHWIC and Cisco 1110 series commands	Cisco IOS Dial Technologies Command Reference
Hardware Overview and Installation	• Cisco 4G-LTE Wireless WAN EHWIC

Related Topic	Document Title
Supported Cisco antennas and cables	• Installing Cisco Interface Cards in Cisco Access Routers • Cisco 4G/3G Omnidirectional Dipole Antenna (4G-LTE-ANTM-D) • Cisco 4G Indoor Ceiling-Mount Omnidirectional Antenna (4G-ANTM-OM-CM) • Cisco Outdoor Omnidirectional Antenna for 2G/3G/4G Cellular (ANT-4G-OMNI-OUT-N) • Cisco Integrated 4G Low-Profile Outdoor Saucer Antenna (ANT-4G-SR-OUT-TNC) • Cisco Single-Port Antenna Stand for Multiband TNC Male-Terminated Portable Antenna (Cisco 4G-AE015-R, Cisco 4G-AE010-R) • Cisco 4G Lightning Arrestor (4G-ACC-OUT-LA) • Lightning Arrestor for the Cisco 1240 Connected Grid Router • Cisco 4G Indoor/Outdoor Active GPS Antenna (GPS-ACT-ANTM-SMA)

MIBs

MIB	MIBs Link
• IF-MIB • CISCO-ENTITY-VENDORTYPE-OID-MIB • CISCO-WAN-3G-MIB	To locate and download MIBs for selected platforms, Cisco software releases, and feature sets, use Cisco MIB Locator found at the following URL: http://www.cisco.com/go/mibs

RFCs

RFC	Title
RFC 3025	*Mobile IP Vendor/Organization-Specific Extensions*

Technical Assistance

Description	Link
The Cisco Support and Documentation website provides online resources to download documentation, software, and tools. Use these resources to install and configure the software and to troubleshoot and resolve technical issues with Cisco products and technologies. Access to most tools on the Cisco Support and Documentation website requires a Cisco.com user ID and password.	http://www.cisco.com/cisco/web/support/index.html

Feature Information for Cisco 4G LTE

The following table provides release information about the feature or features described in this module. This table lists only the software release that introduced support for a given feature in a given software release train. Unless noted otherwise, subsequent releases of that software release train also support that feature.

Use Cisco Feature Navigator to find information about platform support and Cisco software image support. To access Cisco Feature Navigator, go to www.cisco.com/go/cfn. An account on Cisco.com is not required.

Table 9: Feature Information for Cisco 4G LTE

Feature Name	Releases	Feature Information
Dual-mode LTE Support for Cisco 1110?	Cisco IOS Release 16.5.1	Cisco 4G LTE WWAN EHWICs (EHWIC-4G-LTE-V for Verizon Wireless networks) support 4G-LTE cellular and 3G cellular networks. 4G-LTE mobile specification provides multi-megabit bandwidth, more efficient use of the radio network, latency reduction, and improved mobility. The following commands were introduced or modified: **cellular**, **controller cellular**, **default lte**, **lte event**,**lte radio**, **lte sim**, **lte**.
Enhancements for Dual-mode LTE Support forCisco 1110	Cisco IOS Release 16.5.1	Bug Fixes. See *Release Notes for Cisco 4G LTE Wireless WAN EHWIC 1.0* at: http://www.cisco.com/en/US/docs/routers/access/interfaces/Release/Notes/RN_MM4G3GWAN.pdf http://www.cisco.com/en/US/docs/routers/access/interfaces/Release/Notes/RN_MM4G3GWAN.pdf
Multimode 4G LTE Support for Cisco 1110?	Cisco IOS Release 16.5.1	This feature is supported on the Cisco 1110 series routers. The following 4G LTE WWAN EHWICs were released: • EHWIC-4G-LTE-A—Dedicated multimode LTE for AT&T Wireless networks • EHWIC-4G-LTE-G—Dedicated multimode LTE for global wireless networks Multimode LTE EHWIC is backwards compatible with HSPA+, HSPA, UMTS, EDGE, and GPRS.
4G LTE GPS NMEA, SMS, and Dual SIM support	Cisco IOS Release 16.5.1	The Cisco 1110 series and 4G LTE EHWIC MC77xx modems support the following features: • Active and passive antenna-based Global Positioning System (GPS) • 4G Short Message Service (SMS) feature for the receiving, transmitting, archiving, and deleting of SMS messages • Dual SIM support The following commands were introduced or modified: **cellular lte profile**, **cellular lte sms**, **debug cellular messages**, **lte failovertimer**, **lte gps**, **lte sim**, **lte sms archive path**, **show cellular**.

© 2012–2017 Cisco Systems, Inc. All rights reserved.