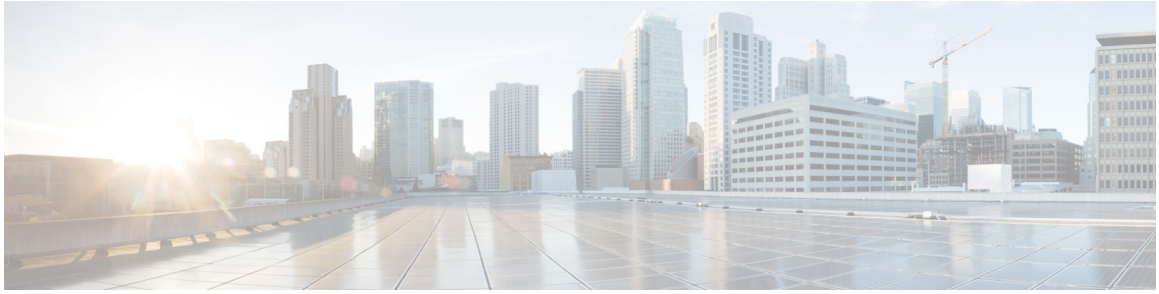

Cisco Connected Grid Cellular 3G CDMA Module for CGR 1000 Series Installation and Configuration Guide (Cisco IOS)

First Published: January 2014
Last Updated: July 2014
OL-31236-02

This document provides an overview of hardware and Cisco IOS configuration information for the 3G CDMA single-wide, high-speed, connected grid router WAN interface card.

The Third Generation (3G) Code Division Multiple Access (CDMA) module is a multiband, multiservice WAN module for use over CDMA Radio Access Networks (RAN). You can use the 3G CDMA module as the backup for critical applications as well as the primary WAN connection.

You can install the 3G CDMA module in both versions of the Cisco 1000 Series Connected Grid Routers: the CGR 1240 and the CGR 1120.

This document includes the following sections:

- Kit Contents, page 2
- Features, page 3
- Hardware Overview, page 4
- Installing and Removing the 3G CDMA Module, page 13
- Regulatory and Compliance Information, page 16
- CDMA Network Overview, page 16
- 3G Cellular WAN MIB, page 17
- Configuring the 3G CDMA Module, page 23
- Configuration Examples, page 31
- Troubleshooting, page 33
- Additional References, page 36
- Command Reference, page 38

Cisco Systems, Inc.
www.cisco.com

- Technical Assistance, page 70

Warning **Only trained and qualified personnel should be allowed to install, replace, or service this equipment.** Statement 1030

Kit Contents

Your 3G CDMA module kit contains the CDMA module listed in Table 1.

Note The Cisco Connected Grid 3G Module is a field-replaceable unit.

Figure 1 Cisco Connected Grid 2G/3G Wireless Connected Grid Module

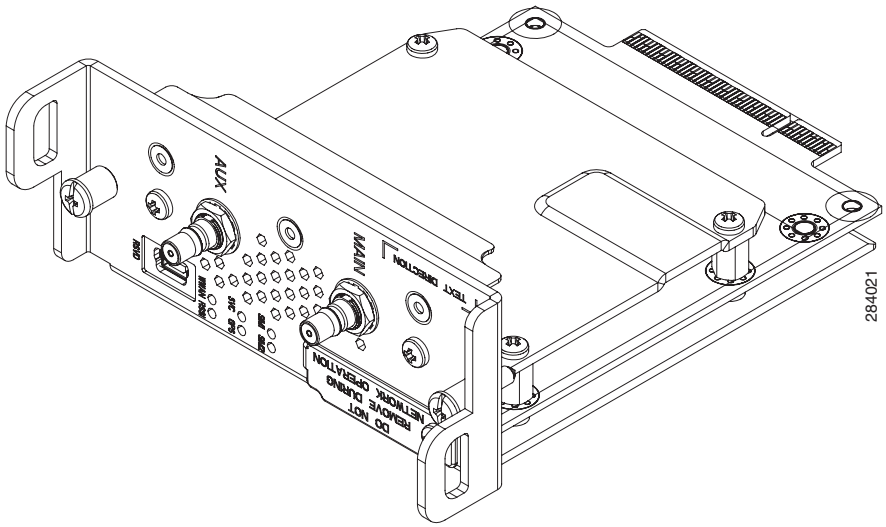

Table 1 Kit Contents for the 3G CDMA Module

Cisco Part Number	Region	Frequency Band
CGM-3G-EVDO-V	North America: Verizon Wireless	CDMA/EVDO: 800-900 MHz Cellular Band and 1800-1900 MHz PCS Band

For system requirements, important notes, limitations, open and resolved bugs, and last-minute documentation updates, see the Release Notes on Cisco.com. For translations of the warnings that appear in this document, see the Regulatory Compliance and Safety Information for Cisco Connected Grid Router 1000 Series Routers.

When using the online publications, see the documents that match the Cisco system software version running on the 2G/3G wireless module. (To display the software version, run the **show version** command.)

Features

The 3G wireless module provides the following functionality:

- Broadband WAN connectivity using high speed cellular data technology.
- Support for the following technologies:
  - CDMA2000 Evolution-Data Optimized (EVDO) Revision (Rev) A.
  - CDMA2000 EVDO Rev 0.
  - CDMA Single channel Radio Transmission Technology (1xRTT).
- Automatic best network selection.
- Always-on capability.
- Multiple antenna and cable options:
  - Diversity antenna.
  - Indoor and outdoor external antennas.
  - Radio Frequency Ultra Low Loss (RF-ULL) cable length from 10 ft to 75 ft.
- Static and dynamic IP addressing.
- Modem-based support for mobile IP.
- Cellular interface based on the async interface in Cisco IOS.
- Mobile IP profile management for CDMA.
- Security features such as firewall, intrusion-detection systems (IDS), and intrusion-prevention systems (IPS).
- Diagnostic and monitoring capability.
- Modem activation—You can activate the modem either by using over-the-air service provisioning (OTASP).
- Modem management—You can access modem software and hardware information, radio and network status, and data profile information by using Cisco IOS commands and SNMP MIBs.
- Dial on Demand Routing (DDR)—This allows you to set up a data call when there is data traffic to be sent over the wireless network.
- Fallback connection (DDR backup)—The 3G CDMA module allows you to configure the cellular modem to initiate a dialup connection when connection to a primary service is lost.
- Teardown after fallback (part of fallback DDR)—After a primary connection has failed and the cellular connection is in fallback mode, the 3G CDMA module tears down the fallback-mode connection when the primary connection is available.
- Automatic teardown—After a configurable timeout, the 3G CDMA module automatically tears down a connection if there has been no activity.
- Firmware upgrade—You can upgrade the firmware on the modem by using Cisco IOS commands.
- Comprehensive Cisco IOS MIB support including Interface (IF) MIBs and Entity MIBs.
- 3G cellular MIB support.

Hardware Overview

The 3G CDMA module is a wireless module with a mini-card cellular modem (PCI-e mini-card form factor). The module connects to the host router board of the CGR 1120 or CGR 1240.

This section covers the following topics:

- Front Panel, page 4
- Ports and LEDs, page 6
- Supported Cisco Antennas, page 7
- Supported Cisco Cables, page 9
- Interfaces, page 9
- Radio Frequency Interface, page 10
- Environmental Specifications, page 10
- Power Specifications, page 10
- Modem, page 11
- Voltage Monitoring State Machine, page 11
- Temperature Monitoring State Machine, page 11
- Data Rate, page 12
- Memory Specifications, page 12
- Module Power States, page 12

Front Panel

The front panel of the 3G CDMA module has the following components:

- Auxiliary port—QMA connector for the RX diversity antenna. (The connector is not used for GPS because the GPS of the host router is used.)
- QMA connector for antenna—transmits and receives RF.
- Mini-USB port—Can be used as a diagnostic port.
- LEDs:
  - Wireless WAN (WWAN)
  - Received Signal Strength Indication (RSSI)
  - Service (SVC)
  - SIM0 and SIM1 (for GSM version)

Figure 2 shows the front panel components of the 3G CDMA module.

Figure 2 Front Panel of the 3G CDMA module

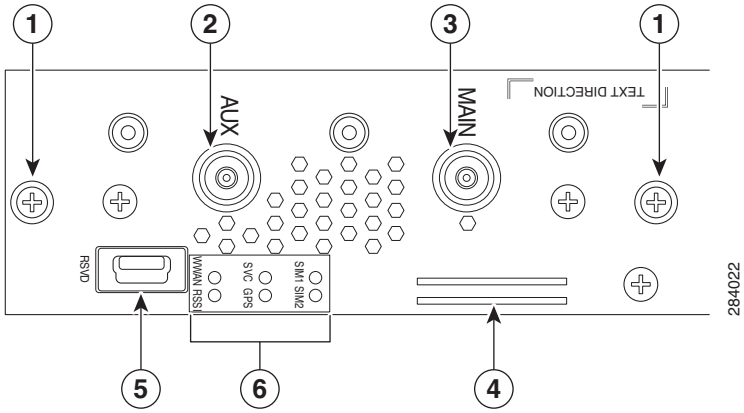

1	Captive screws (2)	**2**	Auxiliary port—QMA connector for antenna for RX diversity antenna. (Connector is not used for GPS since the GPS of host router is used).
3	Main port—QMA connector for antenna—transmits and receives RF.	**4**	SIM card slots—Only SIM card slot x is currently supported by software.
5	RSVD—Mini-USB port (can be diagnostic port).	**6**	LEDs—WWAN, RSSI, SVC, SIM0, and SIM1.

Ports and LEDs

Figure 3 shows the LEDs of the Cisco Connected Grid 3G Module.

Figure 3 2G/3G Connected Grid Module LEDs

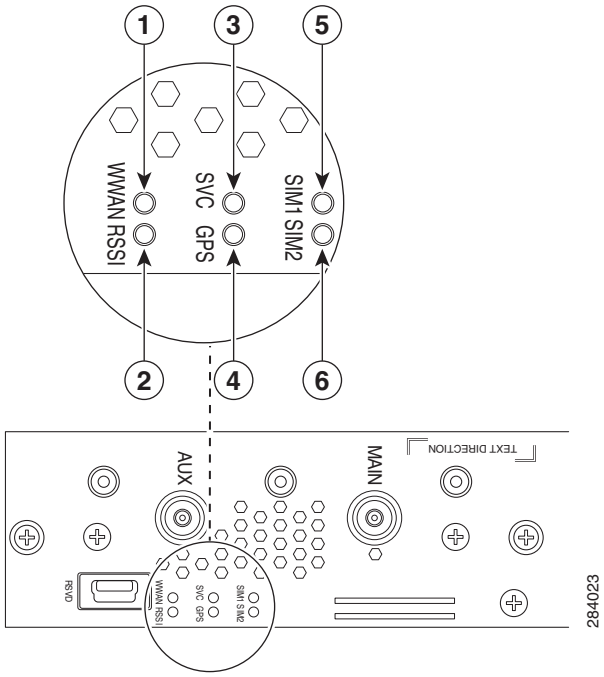

1	WWAN LED	**2**	RSSI LED
3	SVC LED	**4**	GPS LED (not used)
5	SIM0 LED (for GSM version)	**6**	SIM1 LED (for GSM version)

Table 2 lists the ports and the LED indicators and describes their behavior. The LEDs provide a visual indication of the available services.

Table 2 LED Definitions

Port or LED Name	Color	Description
WWAN	Green	Indicates the modem status. Driven by the modem, not under software control except for diagnostic purposes. Functionality may be changed by configuring modem. • **Off**: Module not powered • **On**: Module is powered on and connected but not transmitting or receiving • **Slow blink**: Module is powered on and searching for connection • **Fast blink**: Module is transmitting or receiving For information on modem settings, see Modem, page 11.
RSSI	Bi-color, green/amber	Indicates the level of signal strength received by the software: • **Off**: RSSI ≤–110 • **Solid amber**: –110 < RSSI ≤–90 • **Fast green blink:** –90 < RSSI ≤–75 • **Slow green blink**: –75 < RSSI ≤–60 • **Solid green**: RSSI > –60
SVC	Bi-color, green/amber	Service LED indicates the following: • **Off**: No service • **Solid amber**: 1xRTT • **Green slow blink**: EVDO Rev 0 • **Solid green**: EVDO Rev A

Supported Cisco Antennas

The antenna is connected to the QMA, panel-mount, 50-ohm connector located on the faceplate of the module. The modem mini-card antenna connector is a U.FL, 50-ohm, with a short 50-ohm coaxial cable to the QMA connector.

Note The antennas have either N or TNC connectors (not QMA connectors). This means that either an adapter (ANT-4G-SR-OUT-TNC) or lightning arrestor (omni or panel) is required.

For more information about antennas, including installation procedures, see the Connected Grid Antennas Installation Guide.

Table 3 lists the Cisco antennas that are supported for use with the 3G CDMA module and the Cisco 1120 Connected Grid Router.

Table 3 CGR 1120—Supported Antennas and Cables for Use With the 3G CDMA module

Cisco 1120 Connected Grid Router				
Case Description	**Indoor Cable**	**Lightning Arrestor**	**Outdoor Cable**	**Antenna**
Case 1: 2G/3G Connected Grid Module, 10’, 15’ or 20’ cable through conduit or building entry panel passthrough, Stick Omni or Directional Flat Panel antenna, 2 QMA(f) on faceplate	RA-QMA(m) to N(m), LMR-240-DB, 10’, qty 2 • CAB-L240-10-QMA-N	None	Same cable as indoor cable, that is, a single cable runs from inside to outside, through conduit.	4G omni stick, N(f), qty 2 • ANT-4G-OMNI-OUT-N
	RA-QMA(m) to N(m), LMR-240-DB, 15’, qty 2 • CAB-L240-15-QMA-N			3G, 806-960 MHz, 1710-2170 MHz, flat panel antenna, 10/11 dBi, qty 1 • ANT-4G-PNL-OUT-N
	RA-QMA(m) to N(m), LMR-240-DB, 20’, qty 2 • CAB-L240-20-QMA-N			
Case 2: 2G/3G Connected Grid Module, Indoor Cable, Lightning Arrestor, Outdoor Cable, Stick Omni or Directional Flat Panel antenna, 2 QMA(f) on faceplate	RA-QMA(m) to N(m), LMR-240-DB, 10’, qty 2 • CAB-L240-10-QMA-N	Lightning Arrestor, N(f)-N(f), qty 2 • CGR-LA-N-N	RA-N(m) to N(m), LMR-400-DB, 20’, qty 2 • CAB-L400-20-N-N	4G omni stick, N(f), qty 2 • ANT-4G-OMNI-OUT-N
			RA-N(m)-N(m), LMR-600-DB, 30’ • CAB-L600-30-N-N	3G, 806-960 MHz, 1710-2170 MHz, flat panel antenna, 10/11 dBi, qty 2 • ANT-4G-PNL-OUT-N
Case 3. 2G/3G Connected Grid Module, Low Profile Antenna with Integrated 15” coax cable, Mounted to top of Utility Cabinet Roof, 2 QMA(f) on faceplate	None	Connector Adaptor, QMA(m)-TNC(f), qty 2 • ANT-ADPTR-Q -TNC	None	4G Low Profile, Integrated, 15’ LMR-195 cable with TNC(m), qty 2 • ANT-4G-SR-OUT-TNC

(f) denotes female connector

(m) denotes male connector

Table 4 lists the Cisco antennas that are supported for use with the 3G CDMA module and the Cisco 1240 Connected Grid Router.

Table 4 CGR 1240—Supported Antennas and Cables for Use With the 3G CDMA Module

Cisco 1240 Connected Grid Router				
Case Description	**Internal Cable**	**Adapter or Lightning Arrestor**	**Outdoor Cable**	**Antenna**
Case 1: Integrated Antenna, 2G/3G Connected Grid Module, 2 QMA(f) on faceplate	RA-QMA(m) to RA-MCX(m), LMR-100, 10.5”, qty 2 • CAB-L100-10-Q-M	None	None	900 MHz, 3G, 806-960 MHz, 1710-2700 MHz, Monopole Antenna, Chassis Mounted, Omni-directional, qty 2 • ANT-MP-INT-OUT-M
Case 2: External Antenna, 2G/3G Connected Grid Module, 2 QMA(f) on faceplate	RA-QMA(m) to RA-MCX(m), LMR-100, 10.5”, qty 2 • CAB-L100-10-Q-M	Bulkhead Adapter, MCX(f) receptacle – N(f), qty 2 • CGR-N-CONN *and* Lightning Arrestor, DC Pass, N(m)-N(f), qty 2 • CGR-LA-NM-NF	RA-N(m)-N(m), LMR-400-DB, 20’, qty 2 • CAB-L400-20-N-N	4G omni stick, N(f), qty 2 • ANT-4G-OMNI-OUT-N
			RA-N(m)-N(m), LMR-600-DB, 30’, qty 2 • CAB-L600-30-N-N	3G, 806-960 MHz, 1710-2170 MHz, flat panel antenna, qty 2 • ANT-4G-PNL-OUT-N

Supported Cisco Cables

Table 5 lists insertion loss information and operating frequency levels for the Ultra Low Loss (ULL) LMR cables, and LMR 400 cables available from Cisco for use with the 2G/3G Connected Grid module.

You can use the RG-174/U type cables to adapt the modem external antenna connection to any of the modules cables and antennas.

Table 5 Cisco Extension Cable Assemblies for 3G CDMA Module

Cisco Product Number	Cable Length	Maximum Insertion Loss	Frequency (MHz)
CAB-L240-10-Q-N	10 ft (3.1 m)	1.3 dB max. at 2000 MHz	700 to 2700 MHz
CAB-L240-15-Q-N	15 ft (4.6 m)	1.9 dB max. at 2000 MHz	700 to 2700 MHz
CAB-L240-20-Q-N	20 ft (6.1 m)	2.5 dB max. at 2000 MHz	700 to 2700 MHz
CAB-L400-20-N-N	20 ft (6.1 m)	1.4 dB max. at 2000 MHz	700 to 2700 MHz
CAB-L400-30-N-N	30 ft (9.1 m)	1.0 dB max. at 2000 MHz	700 to 2700 MHz

Interfaces

The module includes the following physical interfaces to the host:

- **Power**—Supplied to the module by the host
- **Wireless disable**—As described in the PCI-Express Mini Card specification
- **LED output**—As described in the PCI-Express Mini Card specification
- **Antenna**—QMA (f) RF connector for the Rx/Tx path.

- **USIM**—Supported through the interface connector. The USIM cavity/connector needs to be placed on the host device for this feature
- **USB**—Only communication interface to the host for data, control, and status information

Radio Frequency Interface

The Radio Frequency (RF) interface consists of two QMA connectors on the faceplate labeled *MAIN* and *AUX*. The main antenna is mandatory; it both transmits and receives RF. The *AUX* QMA connector is for the RX Diversity.

Environmental Specifications

Table 6 lists the environmental specifications for the 3G CDMA module.

Table 6 Module Environmental Specifications

Environmental—Operational	Specifications
Operating temperature (CGR 1120)	-13°F to 140°F (-25°C to 60°C)
Operating temperature (CGR 1240)	-40 to +158°F (-40 to +70°C)
Altitude	Up to 1500 meters
Humidity	RH95% non condensed
Vibration	1.0 g from 1.0 to 150 Hz
Shock	30 G half sine 6 ms and 11 ms
Seismic	GR63-Core, Zone 4

Power Specifications

There are two switching DC-DC power supplies on the Cisco Connected Grid 2G/3G Wireless Connected Grid Module. The module 12V-to-3.3V DC-DC switcher and modem 12V-to-3.3V DC-DC switcher can both be power margined through CLI commands.

Note Power cables are self-shielded; no additional shielding is required.

The 2G/3G Connected Grid module has a 12V power rail and 3.3V stand-by power provided by the host system. It has two 3.3V DC-DC converters on the 12V power rail: one for the module and the other for the modem.

Table 7 Power Specifications

Power Source	Description
12V power rail	Max 1A (based on current draw from 2 DC-DC converters below)

Table 7 Power Specifications (continued)

Power Source	Description
3.3V modem	Peak current 3.75A, average power: 3W (based on average current of ~0.8A)
3.3V module	Peak current 500mA typical: 200mA (for LEDs and integrated circuitry)
3.3V standby	Peak current 500mA (for quack2/temp sensor)

Modem

The MC5728V PCI Express Mini Card modem provides voice, features, and CDMA and 1xEVDO wireless radio connectivity technologies with dual-band diversity radio supporting the following frequency bands:

- 800 MHz cellular
- 1900 MHz PCS

MC5728V includes two RF connector jacks for use with host antennas. (It does not have integrated antennas.) One connector is used for the main Rx/Tx path.

MC5728V supports the following RF features:

- Dual-band for 800 MHz cellular and 1.9 GHz PCS bands
- Diversity support for the 800 MHz cellular and 1.9 GHz PCS bands
- CDMA authentication as specified in CDMA 1X
- IS-95A/B and CDMA 1X Release 0/A
- IS-856 1xEVDO Revision A

The MC5728V Mini Card supports communication with the host through the USB. The USB interface can be dynamically configured to operate in one of two modes:

- Non-MUX mode
- MUX mode

The MC5728V Mini Card supports three logical interfaces:

- Data channel—Supports AT command and Point-to-Point (PPP) packet exchange during data calls
- Control channel—Supports modem control and status, call processing, and event notification
- Diagnostic channel—Supports the QUALCOMM Diagnostic Monitoring protocol used by support tools

Voltage Monitoring State Machine

A state machine in the 3G CDMA module monitors the VCC supply and the voltage conditions that trigger state changes.

Temperature Monitoring State Machine

The state machine in the Cisco Connected Grid 2G/3G Wireless Connected Grid Module monitors the embedded module temperature.

Data Rate

The actual throughput rates depend on many different factors, but the theoretical rate for EVDO Rev A is 3.1 Mbps down; 1.8 Mbps up.

Memory Specifications

The memory specifications of the module are listed in Table 8.

Table 8 Memory Specifications for the 3G CDMA Module

Memory Type	Minimum	Maximum
DDR2 SDRAM	1Gb (128 Mb)	NA (1Gb is sufficient for the Linux SDK design and modem firmware upgrade)
DDR2 SDRAM for fixed platforms	512 Mb (384 Mb for IOS and 128 Mb for the Linux)	—

Module Power States

The module has the following power states:

- **Normal mode** (default mode)—Module is active. Receive and Transmit modes are possible. In this state:
  - The module is fully powered.
  - The module is capable of placing/receiving calls or establishing data connections on the wireless network.
  - The USB interface is fully active.

  Note The module unit defaults to the Normal state when VCC is first applied.

- **Low power mode** (*airplane mode*)—The module is active, but RF is disabled. In this state, RF (both Rx and Tx) is disabled on the module, but the USB interface is still active. This state is controlled though the host interface by the following software commands:
  - **AT!PCSTATE=0** command (AT Command Set for User Equipment (UE) (Release 6))
  - CNS_RADIO_POWER [0x1075] (CDMA CnS Reference (Document 2130754))

  Note The module goes from normal mode into low-power mode to suspend RF activity. This occurs when the module's supply voltage exceeds either the high or low limits. The module returns to normal mode to resume RF activity. It occurs when the module's supply voltage returns from critical to normal limits.

- **Disconnected mode**—No power to the module. The host power source is disconnected from the module and all voltages associated with the module are at 0 V.

CGR 1120 and CGR 1240 control the power to the module, therefore the host can stay powered on and cut the power in order to put the module into the disconnected state.

The module begins a shutdown sequence and powers off if it has been in a powered-on state for more than 10.5 seconds and the host device drives the W_Disable# signal low for:

- MC5728V: ≥ 50 ms
- Other devices: ≥ 500 ms

Installing and Removing the 3G CDMA Module

Some Cisco Connected Grid 2G/3G Wireless Connected Grid Modules are installed into the host router at the factory.

Before You Begin Installation

Before installing the module, verify that the following guidelines have been met:

- Clearance to the I/O-side view is such that the LEDs can be easily read.
- Cabling is away from sources of electrical noise, such as radios, power lines, and fluorescent lighting fixtures. Make sure that the cabling is away from other devices that might damage the cables.
- Airflow around the switch module and through the vents is unrestricted.
- Temperature around the unit does not exceed 140°F (60° C). If the switch module is installed in a closed or multi-rack assembly, the temperature around it might be higher than normal room temperature.
- Relative humidity around the switch module does not exceed 95 percent (non-condensing).
- Altitude at the installation site is not higher than 4921 feet (1500 meters).
- For 10/100 and 10/100/1000 fixed ports, cable lengths from the switch module to connected devices are not longer than 328 feet (100 meters).

Installation Warning Statements

This section includes the basic installation warning statements. Translations of these warning statements appear in the Regulatory Compliance and Safety Information for Cisco Connected Grid Router 1000 Series Routers document.

Warning **This unit is intended for installation in restricted access areas. A restricted access area can be accessed only through the use of a special tool, lock and key, or other means of security.**
Statement 1017

Warning **Only trained and qualified personnel should be allowed to install, replace, or service this equipment.**
Statement 1030

Warning **To prevent the system from overheating, do not operate it in an area that exceeds the maximum recommended ambient temperature of:**
140°F (60°C) Statement 1047

Warning **This equipment is intended to be grounded to comply with emission and immunity requirements. Ensure that the switch functional ground lug is connected to earth ground during normal use.**
Statement 1064

Warning **To prevent airflow restriction, allow clearance around the ventilation openings to be at least: 1.75 in. (4.4 cm)** Statement 1076

Installing the 3G Module

Install the 3G CDMA module into slot 3 of the Cisco 1120 Connected Grid Router and the Cisco 1240 Connected Grid Router.

To install the module into the router:

Caution The module cannot be hot swapped—to install the module, you must first power down the host router.

Step 1 Before you install the Cisco Connected Grid 3G Module into the host router, read the instructions about installing and removing modules in the *Hardware Installation Guide* of your router.

Step 2 Insert the module into the slot. (CGR 1120 and CGR 1240 shown.)

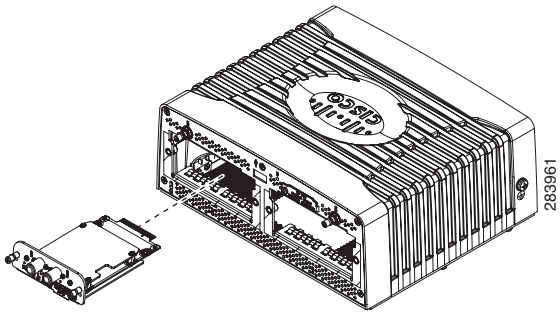

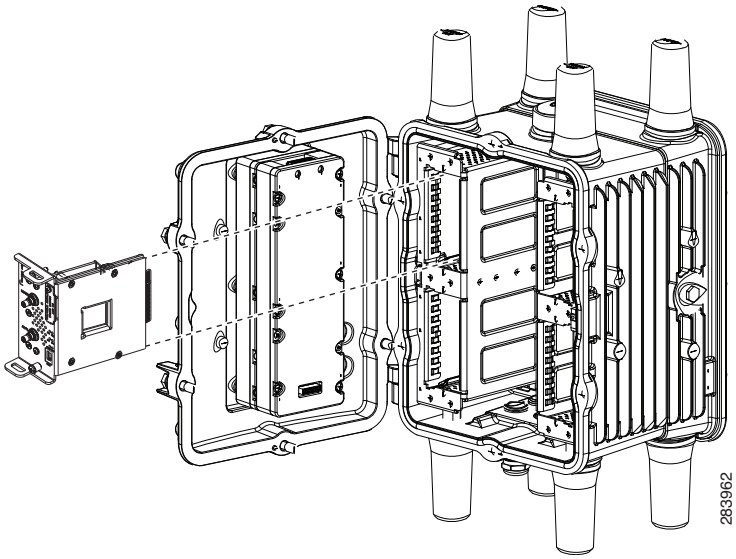

Step 3 Using a screwdriver, secure the two captive screws. Tighten to 5 to 8 pound-force inches (lbf-in.).

Removing the Module

To remove the module from a router:

Caution The module cannot be hot swapped—to remove the module, you must first power down the host router.

Step 1 Before you remove the Cisco Connected Grid 3G Module from the host router, power down the router as described in the *Hardware Installation Guide* of your router.

Step 2 Using a screwdriver, loosen the two captive screws on the Cisco Connected Grid 3G Module.

Step 3 Gently pull the module out of the slot.

Regulatory and Compliance Information

For regulatory compliance and safety information for the module, refer to Regulatory Compliance and Safety Information for the Cisco 1000 Series Connected Grid Routers.

CDMA Network Overview

CDMA is a standard for mobile communication. A typical CDMA network includes terminal equipment, mobile termination, base transceiver station (BTS), base station controller (BSC), packet data serving node (PDSN), and other data network entities. The PDSN is the interface between a BSC and an internet gateway.

Figure 4 shows the relationship of the components of a typical CDMA network, including a PDSN and a branch office with the 3G CDMA module.

As the figure shows, the branch office connects to a radio tower and a BTS. The BTS connects to a BSC, which contains a component called the packet control function (PCF). The PCF communicates with the Cisco PDSN for data communication and with the mobile switching center (MSC) for voice.

Figure 4 Overview of the CDMA Network

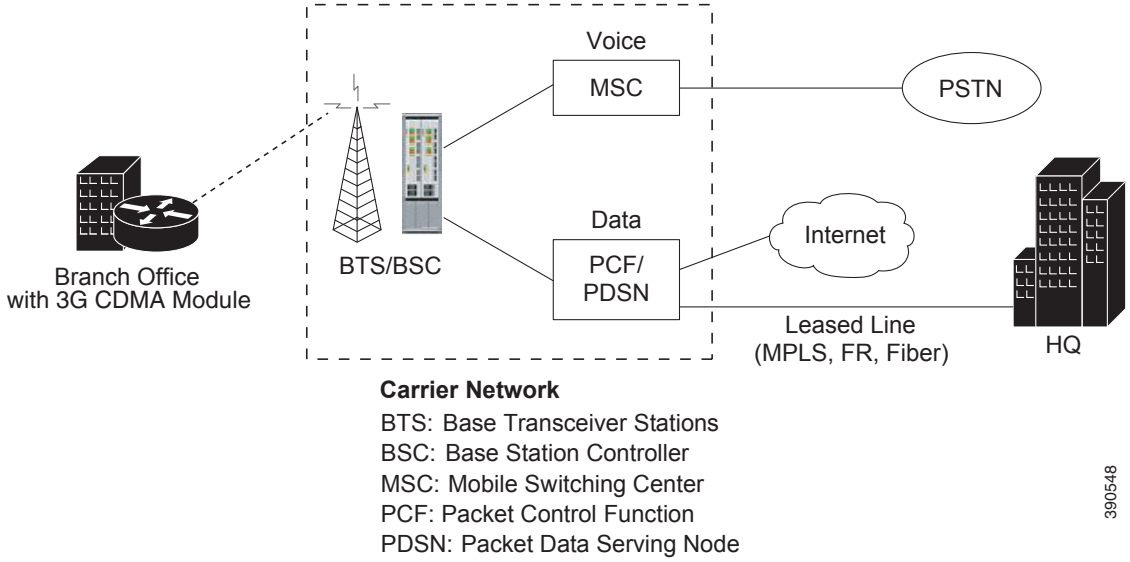

CDMA2000 is a family of standards for 3G mobile communication based on CDMA. The 3G CDMA module supports these CDMA2000 standards:

- 3G Evolution-Data Optimized (EVDO) is a 3G telecommunications standard for the wireless transmission of data through radio signals, typically for broadband Internet access. EVDO uses multiplexing techniques including Code Division Multiple Access (CDMA), as well as Time Division Multiple Access (TDMA), to maximize both individual users' throughput and the overall system throughput.
- Single Carrier Radio Transmission Technology (1xRTT) is a precursor to EVDO that was designed to replace the IS-95 CDMA standard. 1xRTT offers voice and data transmission.

3G Cellular WAN MIB

This section describes the MIB definition and implementation support for Cisco cellular 3G WAN products on the customer premises equipment (CPE) end.

The 3G Cellular WAN MIB supports both CDMA and GSM set of cellular standards and includes the following technologies:

- GSM—GPRS/EDGE/UMTS/HSPA
- CDMA—1xRTT/EVDO RevA/EVDO Rev0

The 3G cellular MIB uses indexes from the cellular interface and from the modem. You can obtain the interface index using IF-MIBs and the modem index using the ENTITY MIBs.

The 3G MIB definition includes the following major sub-trees:

- Common objects
- CDMA objects
- GSM objects
- Notifications

You can use MIB object c3gStandard defined in the c3gWanCommonTable to distinguish between CDMA or GSM and implementing the MIB for CDMA or GSM.

Note Cisco 3G MIB supports all SNMP versions including V1, V2, V2C, and V3. For more information about SNMP, see the *SNMP Software Configuration Guide for Cisco 1000 Series Connected Grid Routers (Cisco IOS)*.

At a high level, the Cisco 3G WAN MIBs are divided into two groups and have the following structure:

1. ciscoWan3gMIBObjects—this group defines all the MIB objects for Cisco 3G WAN MIBs
2. ciscoWan3gMIBNotifs—this group defines all the notification events for Cisco 3G WAN MIBs

ciscoWan3gMIBObjects

The ciscoWan3gMIBObjects group has three sub-groups:

- c3gWanCommonTable—defines the common MIB objects for both CDMA and GSM
- c3gWanCdma—defines the MIB objects specific for CDMA 2000 standards (3GPP2)
- c3gWanGsm—defines the MIB objects specific for GSM/UMTS standards (3GPP)

Under c3gWanCdma, there are seven sub-groups:

- c3gCdmaSessionTable for session related objects
- c3gCdmaConnectionTable for connection related objects
- c3gCdmaIdentityTable for user identity related objects
- c3gCdmaNetworkTable for network related objects
- c3gCdmaProfile for user profile related objects
- c3gCdmaRadio for radio related objects
- c3gCdmaSecurityTable for security related objects

ciscoWan3gMIBNotifs

Cisco Cellular 3G WAN MIB implementation supports SNMP GET (read operation) for all MIB objects, and SNMP SET (write operation) for the following RW (read-write) objects, including:

- c3gRssiOnsetNotifThreshold
- c3gRssiAbateNotifThreshold
- c3gEcIoOnsetNotifThreshold
- c3gEcIoAbateNotifThreshold
- c3gModemTemperOnsetNotifThreshold
- c3gModemTemperAbateNotifThreshold
- c3gModemReset
- c3gModemUpNotifEnabled
- c3gModemDownNotifEnabled
- c3gServiceChangedNotifEnabled
- c3gNetworkChangedNotifEnabled
- c3gConnectionStatusChangedNotifFlag
- c3gRssiOnsetNotifFlag
- c3gRssiAbateNotifFlag
- c3gEcIoOnsetNotifFlag
- c3gEcIoAbateNotifFlag
- c3gModemTemperOnsetNotifEnabled
- c3gModemTemperAbateNotifEnabled

Note By default, all notifications are disabled. To receive notifications, you must enable these notifications (see Table 10).

Note The IF MIBs also have traps for the cellular interface objects that are used in conjunction with the notification type. When you get a notification, you must check the associated objects.

Table 9 shows various notifications and what they mean.

Table 9 Traps and Notifications

Traps	Details
ModemUpNotification	Modem successfully recognized.
ModemDown	A crash or power-cycle occurred.
Change Notification	Notifies about changes in service objects related to this notification—previous service type to current service type.
ConnectionStatus	Shows the connection status. Service type is included in this notification.

Table 10 lists the commands to enable CISCO-WAN-3G-MIB notifications for CDMA events.

Table 10 Commands for CISCO-WAN-3G-MIB CDMA Event Notifications

Command	Description
cdma event connection-status mib-trap *state*	Enables the generation of c3gConnectionStatusChangedNotif traps when connection changes occur. • **all-cdma**–Trap is generated for all CDMA states. • **connected**–Trap is generated when Connected state occurs. • **connecting**–Trap is generated when Connecting state occurs. • **disconnected**–Trap is generated when Disconnected state occurs. • **dormant**–Trap is generated when Dormant state occurs. • **error**–Trap is generated when Error state occurs. • **idle**–Trap is generated when Idle state occurs. • **unknown**–Trap is generated for any state not mentioned above, that is, an unknown state.
cdma event ecio abate {mib-trap ***mibtrap*** **| threshold** *threshold-value***}**	Enables generation of the ECIO abate trap (c3gEcIoAbateNotif) for a particular CDMA service. The trap is sent when the current ECIO value goes above the abate threshold. • *mibtrap*–Specifies the mib-trap technology: – **1xrtt**–1xRTT Service – **all-cdma**–All the CDMA Services – **evdoRel0**–EVDO Revision 0 Service – **evdoRelA**–EVDO Revision A Service – **evdoRelB**–EVDO Revision B Service • **threshold** *threshold-value*–Sets the threshold for sending MIB trap events to the specified value. When the ECIO abate value is greater than the specified threshold, a MIB trap event is sent to the administrator. The range of the threshold value is from -150 to 0 dBm.

Table 10 Commands for CISCO-WAN-3G-MIB CDMA Event Notifications (continued)

Command	Description
cdma event ecio onset mib-trap {mib-trap *mibtrap* | **threshold** *threshold-value*}	Enables generation of the ECIO onset trap (c3gEcIoOnsetNotif) for a particular CDMA service. The trap is sent when the current ECIO value goes below the onset threshold. • *mibtrap*–Specifies the mib-trap technology: – **1xrtt**–1xRTT Service – **all-cdma**–All the CDMA Services – **evdoRel0**–EVDO Revision 0 Service – **evdoRelA**–EVDO Revision A Service – **evdoRelB**–EVDO Revision B Service • **threshold** *threshold-value*–Sets the threshold for sending MIB trap events to the specified value. When the ECIO onset value is less than the specified threshold, a MIB trap event is sent to the administrator. The range of the threshold value is from -150 to 0 dBm.
cdma event modem-state mib-trap {**all** | **up** | **down**}	Enables the generation of trap events for modem states. • **all**–Enables the generation of traps for modem up and down states. • **up**–Enables the generation of traps for modem up state. • **down**–Enables the generation of traps for modem down state.
cdma event network mib-trap	Enables generation of the c3gNetworkChangedNotif trap when network changes occur.
cdma even service mib-trap	Enables generation of the c3gServiceChangedNotif trap when service changes occur.

Table 10 Commands for CISCO-WAN-3G-MIB CDMA Event Notifications (continued)

Command	Description
cdma event temperature abate {**mib-trap** | **threshold** *threshold-value*}	Sets the temperature abate threshold value for sending the c3gModemTemperAbateNotif trap. • **mib-trap**–Enables or disables temperature abate MIB trap events. • **threshold** *threshold-value*–Sets the threshold in Celsius for sending MIB trap events to the specified value. When the temperature abate value is less than the specified threshold (lower temperature), a MIB trap event is sent to the administrator. The range of the threshold value is from -58 to 212°F (-50 to 100°C).
cdma event temperature onset {**mib-trap** | **threshold** *threshold-value*}	Sets the temperature onset threshold value for sending the c3gModemTemperOnsetNotif trap. • **mib-trap**–Enables or disables temperature onset MIB trap events. • **threshold** *threshold-value*–Sets the threshold in Celsius for sending MIB trap events to the specified value. When the temperature onset value is greater than the specified threshold (higher temperature), a MIB trap event is sent to the administrator. The range of the threshold value is from -58 to 212°F (-50 to 100°C).

Table 10 Commands for CISCO-WAN-3G-MIB CDMA Event Notifications (continued)

Command	Description
cdma event rssi abate {**mib-trap** *mibtrap* | **threshold** *threshold-value*}	Enables generation of the RSSI abate trap (c3gRssiAbateNotif) for a particular CDMA service. The trap is sent when the current RSSI value goes above the abate threshold. • *mibtrap*–Specifies the mib-trap technology: – **1xrtt**–1xRTT Service – **all-cdma**–All the CDMA Services – **evdoRel0**–EVDO Revision 0 Service – **evdoRelA**–EVDO Revision A Service – **evdoRelB**–EVDO Revision B Service • **threshold** *threshold-value*–Sets the threshold for sending MIB trap events to the specified value. When the RSSI abate value is greater than the specified threshold (signal getting weaker), a MIB trap event is sent to the administrator. The range of the threshold value is from -150 to 0 dBm.
cdma event rssi onset {**mib-trap** *mibtrap* | **threshold** *threshold-value*}	Enables generation of the RSSI onset trap (c3gRssiAbateNotif) for a particular CDMA service. The trap is sent when the current RSSI value goes below the onset threshold. • *mibtrap*–Specifies the mib-trap technology: – **1xrtt**–1xRTT Service – **all-cdma**–All the CDMA Services – **evdoRel0**–EVDO Revision 0 Service – **evdoRelA**–EVDO Revision A Service – **evdoRelB**–EVDO Revision B Service • **threshold** *threshold-value*–Sets the threshold for sending MIB trap events to the specified value. When the RSSI onset value is less than the specified threshold (signal getting stronger), a MIB trap event is sent to the administrator. The range of the threshold value is from -150 to 0 dBm.

Configuring the 3G CDMA Module

The module is configured using the system software.

This section covers the following topics:

- Prerequisites, page 23
- Restrictions and Limitations, page 23
- Modem Activation and Provisioning, page 24
- Data Call Set up, page 25

Note The 3G CDMA module can be plugged into slot 3 of the Cisco 1120 Connected Grid Router and Cisco 1240 Connected Grid Router. Therefore, the interface name used to configure the module is 3/1. Interface 3/1 is used in the configuration examples in this section.

Prerequisites

The following are prerequisites to configuring the 3G CDMA module:

- You must have service availability from a wireless service provider, and you must have network coverage where your router will be physically located. For a complete list of supported carriers, see the data sheet at the following URL: http://www.cisco.com/go/3g
- You must subscribe to a service plan with a wireless service provider. For manual activation, you will need the following specific information from the provider:
  - Master Subsidy Lock (MSL) number
  - Mobile Directory number (MDN)
  - MSID

  The ESN number is on the modem label. Make sure that your service is registered with the ESN number. You can also obtain the ESN by using the **show cellular hardware** command. See "Retrieving the Electronic Serial Number" section on page 36 for more information.
- You must install the required antennas before you configure the 3G GSM module. See the Connected Grid Antennas Installation Guide for instructions on how to install the antennas.
- You must make sure to check your LEDs for signal reception as described in Table 2.
- You should be familiar with Cisco IOS.

Restrictions and Limitations

The following restrictions apply to the Cisco 3G CDMA module:

- Data connection can be originated only by the 3G CDMA module. Remote dial-in is not supported.
- Throughput—Because of the shared nature of wireless communications, the amount of throughput that is experienced varies, depending on the number of active users or congestion in a network.
- Cellular networks have higher latency, compared to wired networks. Latency rates depend on the technology and carrier. Latency can increase because of network congestion.
- Any restrictions that are a part of the terms of service from your carrier.

Modem Activation and Provisioning

To activate and provision your modem, follow these procedures:

- Verifying Signal Strength and Service Availability, page 24
- Activating the Modem, page 24

Verifying Signal Strength and Service Availability

To verify the signal strength and service availability on your modem, use the following commands in privileged EXEC mode.

BEFORE YOU BEGIN

Review the "Prerequisites" section on page 23 and "Restrictions and Limitations" section on page 23.

DETAILED STEPS

	Command or Action	Purpose
Step 1	**show cellular** *slot/port* **network**	Displays information about the carrier network, cell site, and available service.
Step 2	**show cellular** *slot/port* **radio**	Shows the radio signal strength. **Note** The RSSI should be better than -90 dBm for steady and reliable connection and better than -80 dBm for optimal data throughput.
Step 3	**show cellular** *slot/port* **hardware**	Shows the hardware details and modem type.
Step 4	**show cellular** *slot/port* **all**	Shows consolidated information about the modem, profiles created, radio signal strength, network security, and so on.

EXAMPLE

```
Router# show cellular 3/1 network
Router# show cellular 3/1 radio
Router# show cellular 3/1 hardware
Router# show cellular 3/1 all
```

Activating the Modem

The modem for the CGM-3G-EVDO-V module is activated using over-the-air service provisioning (OTASP).

- Activating Using OTASP, page 24

Activating Using OTASP

To activate a wireless account using over-the-air service provisioning (OTASP), use the following procedure.

BEFORE YOU BEGIN

- Obtain the phone number for use with this command from your carrier. The standard OTASP calling number is *22899.
- The modem must be attached to a 1xRTT/EVDO service.

DETAILED STEPS

	Command	Purpose
	cellular *slot/port* **cdma activate otasp** *phone_number*	Activates the modem using OTASP. *phone_number*—Phone number that you must dial to begin activation using OTASP. This number is specific to a wireless provider. For Verizon Wireless, it is *22899.

EXAMPLE

```
router# cellular 3/1 cdma activate otasp *22899

Beginning OTASP activation
OTASP number is *22899
router#
*Feb  6 23:18:45.393: OTA State = SPL unlock, Result = Success
*Feb  6 23:19:10.229: OTA State = PRL downloaded, Result = Success
*Feb  6 23:19:11.169: OTA State = Profile downloaded, Result = Success
*Feb  6 23:19:11.173: OTA State = MDN downloaded, Result = Success
*Feb  6 23:19:12.537: OTA State = Parameters commited to NVRAM, Result = Success
*Feb  6 23:19:14.613: Over the air provisioning complete; Result:Success
```

Data Call Set up

To set up a data call, use the following procedures:

- Configuring the Cellular Interface, page 26
- Configuring DDR, page 27
- Configuring DDR Backup, page 28
- Configuring Data Dedicated Transmission Mode (DDTM), page 30

Figure 5 shows a data call setup using the 3G CDMA module.

Figure 5 Data Call Setup with the 3G CDMA Module

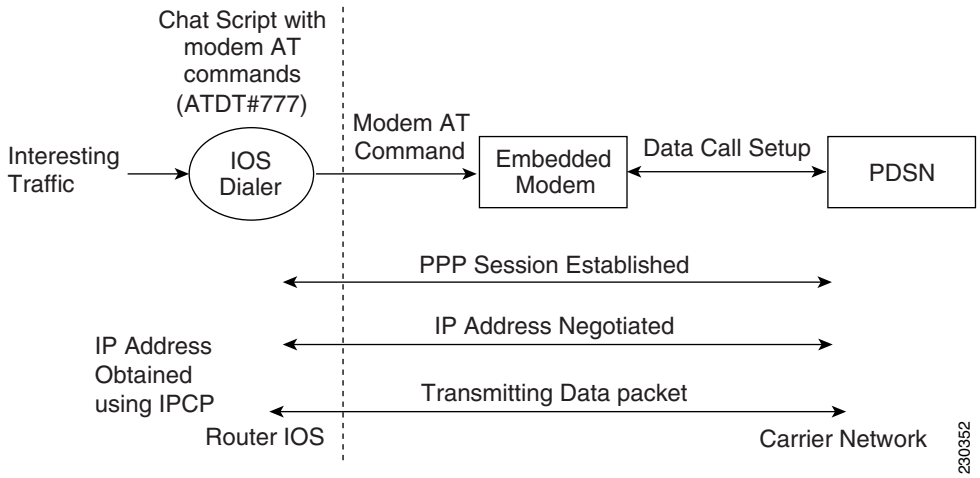

Configuring the Cellular Interface

To configure the cellular interface, perform the following procedure in the cellular interface mode.

BEFORE YOU BEGIN

- The modem supports both mobile IP (MIP) and simple IP (SIP). In both modes, the modem authenticates with the network. However, when the modem is configured in MIP-preferred mode (ask your carrier which mode is supported), if MIP authentication fails, the modem tries to set up a SIP call.

  The modem uses SIP authentication parameters derived during modem provisioning and passes the CHAP authentication challenge to the cellular interface. The purpose of the authentication challenge is to keep the cellular interface informed of Link Control Protocol (LCP) negotiations between the modem and the network.
- When a static IP address is required for the cellular interface, the address may be configured as **ip address negotiated**. During IPCP, the network ensures that the correct static IP address is allocated to the device. If a tunnel interface is configured with **ip address unnumbered** *type number*, it is necessary to configure the actual static IP address under the cellular interface, in place of **ip address negotiated**. For a sample cellular interface configuration, see the "Basic Cellular Interface Configuration: Example" section on page 31.

DETAILED STEPS

	Command or Action	Purpose
Step 1	**configure terminal**	Enters global configuration mode from the terminal.
Step 2	**interface cellular** *slot/port*	Specifies the cellular interface.

	Command or Action	Purpose
Step 3	**encapsulation ppp**	Specifies PPP encapsulation for an interface configured for dedicated asynchronous mode or dial-on-demand routing (DDR).
Step 4	**async mode interactive**	Returns a line that has been placed into dedicated asynchronous network mode to interactive mode, thereby enabling the **SLIP** and **PPP** commands in privileged EXEC mode.
Step 5	**ip address negotiated**	Specifies that the IP address for a particular interface is obtained via PPP/IPCP address negotiation.

EXAMPLE

```
Router# configure terminal
Router (config)# interface cellular 3/1
Router (config-if)# encapsulation ppp
Router (config-if)# async mode interactive
Router (config-if)# ip address negotiated
```

Configuring DDR

To configure dial-on-demand routing (DDR) for the cellular interface, follow these steps:

BEFORE YOU BEGIN

Review the "Prerequisites" section on page 23 and "Restrictions and Limitations" section on page 23.

DETAILED STEPS

	Command or Action	Purpose
Step 1	**configure terminal**	Enters global configuration mode from the terminal.
Step 2	**interface cellular** *slot/port*	Specifies the cellular interface.
Step 3	**dialer in-band**	Enables DDR and configures the specified serial interface to use in-band dialing.
Step 4	**dialer idle-timeout** *seconds*	Specifies the duration of idle time, in seconds, after which a line will be disconnected.
Step 5	**dialer string** *string*	Specifies the number or string to dial. Use the name of the CHAT script here.
Step 6	**dialer-group** *number*	Specifies the number of the dialer access group to which the specific interface belongs.
Step 7	**exit**	Enters the global configuration mode.

	Command or Action	Purpose
Step 8	**dialer-list** *dialer-group* **protocol** *protocol-name* **{permit | deny | list** *access-list-number* **|** *access-group***}**	Creates a dialer list for traffic of interest and permits access to an entire protocol.
Step 9	**ip access-list** *access list number* **permit** *ip source address*	Defines traffic of interest.
Step 10	**line** *number*	Specifies the line configuration mode.
Step 11	**script dialer** *regexp*	Specifies a default modem chat script.
Step 12	**exit**	Exits line configuration mode.
Step 13	**chat-script** *script name* **"" "ATDT#777" TIMEOUT** *timeout value* **CONNECT**	Defines the ATDT commands when the dialer is initiated.
Step 14	**ip route** *prefix mask interface-type interface-number*	Establishes a static route through the interface.

EXAMPLE

```
Router# configure terminal
Router (config)# interface cellular 3/1
Router (config-if)# dialer in-band
Router (config-if)# dialer idle-timeout 30
Router (config-if)# dialer string cdma
Router (config-if)# dialer-group 1
Router (config-if)# exit
Router (config)# dialer-list 1 protocol ip list 1
Router (config)# ip access list 1 permit any
Router (config-line)# line 3/1
Router (config-line)# script-dialer cdma
Router (config-line)# exit
Router (config)# chat-script cdma "" "ATDT#777" TIMEOUT 60 "CONNECT"
Router (config)# ip route 192.0.0.0 255.0.0.0 cellular 3/1
```

Configuring DDR Backup

To monitor the primary connection and initiate the backup connection when needed, the router can use one of the following methods:

- Backup Interface—The backup interface that stays in standby mode until the primary interface line protocol is detected as down and then is brought up.
- Floating Static Route—The route through the backup interface has an administrative distance that is greater than the administrative distance of the primary connection route and therefore would not be in the routing table until the primary interface goes down.
- Dialer Watch—Dialer watch is a backup feature that integrates dial backup with routing capabilities.

Configuring Interfaces to Use a Backup Interface

To configure one or more interfaces to use a backup interface, use the following commands, beginning in global configuration mode.

BEFORE YOU BEGIN

You cannot configure a backup interface for the cellular interface and any other asynchronous serial interface.

DETAILED STEPS

	Command or Action	Purpose
Step 1	**interface** *type number*	Specifies the interface to be backed up and begins interface configuration mode.
Step 2	**backup interface cellular** *number*	Specifies the cellular interface as backup.
Step 3	**backup delay** *enable-delay-period disable-delay-period*	Specifies delay between the physical interface going down and the backup interface being enabled, and between the physical interface coming back up and the backup being disabled.

EXAMPLE

```
Router(config)# interface Gi 2/1
Router(config-if)# backup interface cellular 3/1
Router(config-if)# backup delay 0 10
```

Configuring DDR Backup Using Dialer Watch

To enable dialer watch on the backup interface and create a dialer list, perform the following procedure in interface configuration mode.

BEFORE YOU BEGIN

Configure the interface to perform DDR and backup as described in the "Configuring DDR" procedure on page 27 and "Configuring DDR Backup" procedure on page 28. Use traditional DDR configuration commands, such as dialer maps, for DDR capabilities.

DETAILED STEPS

	Command or Action	Purpose
Step 1	**configure terminal**	Enters global configuration mode from the terminal.
Step 2	**interface** *type number*	Specifies the interface.
Step 3	**dialer watch-group** *group-number*	Enables dialer watch on the backup interface.
Step 4	**dialer watch-list** *group-number* **ip** *ip-address address-mask*	Defines a list of all IP addresses to be watched.
Step 5	**dialer-list** *dialer-group* **protocol** *protocol-name* {**permit** | **deny** | **list** *access-list-number* | *access-group*}	Creates dialer list for traffic of interest and permits access to an entire protocol.
Step 6	**ip access-list** *access list number* **permit** *ip source address*	Defines traffic of interest. **Note** Do not use the **access list permit all** command to avoid sending traffic to the IP network. This may result in call termination.

	Command or Action	Purpose
Step 7	**interface cellular** *slot/port*	Specifies the cellular interface.
Step 8	**dialer-group** *dialer group number*	Maps a dialer list to the dialer interface.

EXAMPLE

```
Router# configure terminal
Router (config)# interface Gi 2/1
Router(config-if)# dialer watch-group 2
Router(config-if)# dialer watch-list 2 ip 10.4.0.254 255.255.0.0
Router(config)# dialer-list 2 protocol ip permit
Router(config)# access list 2 permit 10.4.0.0
Router (config)# interface cellular 3/1
Router(config-if)# dialer-group 2
```

Configuring DDR Backup Using Floating Static Route

To configure a floating static default route on the secondary interface beginning in the global configuration mode, perform the following tasks.

BEFORE YOU BEGIN

Make sure that you have **ip classless** enabled on your router.

DETAILED STEPS

	Command or Action	Purpose
Step 1	**configure terminal**	Enters global configuration mode from the terminal.
Step 2	**ip route** *network-number network-mask* {*ip-address* | *interface*} [*administrative distance*] [**name** *name*]	Establishes a floating static route with the configured administrative distance through the specified interface. **Note** A higher administrative distance should be configured for the route through the backup interface, so that it is used only when the primary interface is down.

EXAMPLE

```
Router# configure terminal
Router (config)# ip route 0.0.0.0 Dialer 2 track 234
```

Configuring Data Dedicated Transmission Mode (DDTM)

On CDMA modems, data transmission is disrupted by incoming voice calls if data dedicated transmission mode (DDTM) is disabled. You can enable DDTM mode so the modem will ignore incoming voice calls.

To enable dedicated data transmission mode (DDTM) on a CDMA modem, use the **cdma ddtm** command in configuration mode

This command is enabled by default. You can disable this feature by using the **no cdma ddtm** command.

Note When DDTM is enabled, only voice calls will be blocked for the MC5728v modem.

Configuration Examples

This section provides the following configuration examples:

- Basic Cellular Interface Configuration: Example
- Tunnel over Cellular Interface Configuration: Example

Basic Cellular Interface Configuration: Example

The following is an example configuration where the cellular interface is used as a primary and is configured as the default route:

```
chat-script cdma "" "ATDT#777" TIMEOUT 60 "CONNECT"

!
interface Cellular3/1
 ip address negotiated
 encapsulation ppp
 dialer in-band
 dialer string cdma
 dialer-group 1
 async mode interactive
 ppp ipcp dns request
!

!
!
ip route 74.0.0.0 255.0.0.0 Cellular3/1
access-list 1 permit any
dialer-list 1 protocol ip list 1
!
line 3/1
 script dialer cdma
 modem InOut
 no exec
 transport input all
 transport output all
```

Tunnel over Cellular Interface Configuration: Example

The following sample configuration shows the configuration of the static IP address when a tunnel interface is configured using the **ip address unnumbered** <*cellular interface*> command:

```
interface Tunnel2
 ip address unnumbered cellular 3/1
 tunnel source Cellular3/1
```

```
 tunnel destination 128.107.248.254

interface Cellular3/1
!
 ip address negotiated

 encapsulation ppp

 dialer in-band
 dialer idle-timeout 0
 dialer string cdma
 dialer-group 1
 async mode interactive

 ppp ipcp dns request

! traffic of interest through the tunnel/cellular interface
ip route 10.10.0.0 255.255.0.0 Tunnel2
ip route 74.0.0.0 255.0.0.0 Cellular3/1
access-list 1 permit any
dialer-list 1 protocol ip list 1
```

Troubleshooting

If you are encountering issues with 3G CDMA module operation, this section can help you troubleshoot and pinpoint the cause of failure.

Verifying Configuration

To verify your configuration and to make sure that your connection is up and running, follow these step:

Step 1 After creating a profile with the **create cellular profile** command, send a ping from a router or attached host.

Step 2 If you do not get any response, to find where failure is occurring, run the following debug commands:

- **debug chat**
- **debug PPP negotiation**
- **debug dialer**
- **debug cellular** *slot/port* **messages callcontrol**
- **show cellular** *slot/port* **all**
- **show interface cellular** *slot/port*
- **show running-config**
- **show controllers cellular** *slot/port*

Step 3 Save the output from all these commands and contact your system administrator.

Checking Signal Strength

If the RSSI level is very low, for example, less than -110 dBm, it means one of the following:

- Your antenna is not connected
- The antenna is not working properly
- There is no service in your area

If all the above are connected and working as they should, contact your system administrator.

Call Setup Using CHAT Script

The following is a sample output for a call that is set up using CHAT script. It shows a received IP address from the network and indicates that the call setup is successful and the data path is open:

```
Debugs enabled:
debug modem
debug chat
debug ppp negotiation
debug ppp event
debug ppp error
```

```
router# ping www.yahoo.com

Translating "www.yahoo.com"...domain server (255.255.255.255)
*Mar  1 23:42:57.398: CHAT3/1: Attempting async line dialer script
*Mar  1 23:42:57.398: CHAT3/1: Dialing using Modem script: verizon & System script: none
*Mar  1 23:42:57.402: CHAT3/1: process started
*Mar  1 23:42:57.402: CHAT3/1: Asserting DTR
*Mar  1 23:42:57.402: CHAT3/1: Chat script verizon started
*Mar  1 23:42:57.402: CHAT3/1: Sending string: atdt#777
*Mar  1 23:42:57.402: CHAT3/1: Expecting string: CONNECT
*Mar  1 23:42:58.710: CHAT3/1: Completed match for expect: CONNECT
*Mar  1 23:42:58.710: CHAT3/1: Chat script verizon finished, status = Success
*Mar  1 23:42:58.878: TTY3/1: no timer type 1 to destroy
*Mar  1 23:42:58.878: TTY3/1: no timer type 0 to destroy
*Mar  1 23:42:58.878: TTY3/1: no timer type 2 to destroy
*Mar  1 23:43:00.878: %LINK-3-UPDOWN: Interface Cellular3/1, changed state to up
*Mar  1 23:43:00.878: Ce3/1 PPP: Using dialer call direction
*Mar  1 23:43:00.878: Ce3/1 PPP: Treating connection as a callout
*Mar  1 23:43:00.878: Ce3/1 PPP: Session handle[CD00000E] Session id[5]
*Mar  1 23:43:00.878: Ce3/1 PPP: Phase is ESTABLISHING, Active Open
*Mar  1 23:43:00.878: Ce3/1 PPP: No remote authentication for call-out
*Mar  1 23:43:00.878: Ce3/1 LCP: O CONFREQ [Closed] id 5 len 20
*Mar  1 23:43:00.878: Ce3/1 LCP:    ACCM 0x000A0000 (0x0206000A0000)
*Mar  1 23:43:00.878: Ce3/1 LCP:    MagicNumber 0x4597FB75 (0x05064597FB75)
*Mar  1 23:43:00.878: Ce3/1 LCP:    PFC (0x0702)
*Mar  1 23:43:00.878: Ce3/1 LCP:    ACFC (0x0802)
*Mar  1 23:43:00.878: Ce3/1 LCP: I CONFREQ [REQsent] id 12 len 20
*Mar  1 23:43:00.882: Ce3/1 LCP:    ACCM 0x00000000 (0x020600000000)
*Mar  1 23:43:00.882: Ce3/1 LCP:    MagicNumber 0x7F576333 (0x05067F576333)
*Mar  1 23:43:00.882: Ce3/1 LCP:    PFC (0x0702)
*Mar  1 23:43:00.882: Ce3/1 LCP:    ACFC (0x0802)
*Mar  1 23:43:00.882: Ce3/1 LCP: O CONFACK [REQsent] id 12 len 20
*Mar  1 23:43:00.882: Ce3/1 LCP:    ACCM 0x00000000 (0x020600000000)
*Mar  1 23:43:00.882: Ce3/1 LCP:    MagicNumber 0x7F576333 (0x05067F576333)
*Mar  1 23:43:00.882: Ce3/1 LCP:    PFC (0x0702)
*Mar  1 23:43:00.882: Ce3/1 LCP:    ACFC (0x0802)
*Mar  1 23:43:00.882: Ce3/1 LCP: I CONFACK [ACKsent] id 5 len 20
*Mar  1 23:43:00.882: Ce3/1 LCP:    ACCM 0x000A0000 (0x0206000A0000)
*Mar  1 23:43:00.882: Ce3/1 LCP:    MagicNumber 0x4597FB75 (0x05064597FB75)
*Mar  1 23:43:00.882: Ce3/1 LCP:    PFC (0x0702)
*Mar  1 23:43:00.882: Ce3/1 LCP:    ACFC (0x0802)
*Mar  1 23:43:00.882: Ce3/1 LCP: State is Open
*Mar  1 23:43:00.882: Ce3/1 PPP: Phase is FORWARDING, Attempting Forward
*Mar  1 23:43:00.882: Ce3/1 PPP: Phase is ESTABLISHING, Finish LCP
*Mar  1 23:43:00.882: Ce3/1 PPP: Phase is UP
*Mar  1 23:43:00.882: Ce3/1 IPCP: O CONFREQ [Closed] id 1 len 22
*Mar  1 23:43:00.882: Ce3/1 IPCP:    Address 0.0.0.0 (0x030600000000)
*Mar  1 23:43:00.882: Ce3/1 IPCP:    PrimaryDNS 0.0.0.0 (0x810600000000)
*Mar  1 23:43:00.882: Ce3/1 IPCP:    SecondaryDNS 0.0.0.0 (0x830600000000)
*Mar  1 23:43:00.882: Ce3/1 PPP: Process pending ncp packets
*Mar  1 23:43:00.882: Ce3/1 IPCP: I CONFREQ [REQsent] id 4 len 10
*Mar  1 23:43:00.886: Ce3/1 IPCP:    Address 68.28.57.69 (0x0306441C3945)
*Mar  1 23:43:00.886: Ce3/1 IPCP: O CONFACK [REQsent] id 4 len 10
*Mar  1 23:43:00.886: Ce3/1 IPCP:    Address 68.28.57.69 (0x0306441C3945)
*Mar  1 23:43:00.886: Ce3/1 IPCP: I CONFNAK [ACKsent] id 1 len 22
*Mar  1 23:43:00.886: Ce3/1 IPCP:    Address 70.12.159.189 (0x0306460C9FBD)
*Mar  1 23:43:00.886: Ce3/1 IPCP:    PrimaryDNS 68.28.58.11 (0x8106441C3A0B)
*Mar  1 23:43:00.886: Ce3/1 IPCP:    SecondaryDNS 68.28.50.11 (0x8306441C320B)
*Mar  1 23:43:00.886: Ce3/1 IPCP: O CONFREQ [ACKsent] id 2 len 22
*Mar  1 23:43:00.886: Ce3/1 IPCP:    Address 70.12.159.189 (0x0306460C9FBD)
*Mar  1 23:43:00.886: Ce3/1 IPCP:    PrimaryDNS 68.28.58.11 (0x8106441C3A0B)
*Mar  1 23:43:00.886: Ce3/1 IPCP:    SecondaryDNS 68.28.50.11 (0x8306441C320B)
*Mar  1 23:43:00.886: Ce3/1 IPCP: I CONFACK [ACKsent] id 2 len 22
```

```
*Mar  1 23:43:00.886: Ce3/1 IPCP:    Address 70.12.159.189 (0x0306460C9FBD)
*Mar  1 23:43:00.886: Ce3/1 IPCP:    PrimaryDNS 68.28.58.11 (0x8106441C3A0B)
*Mar  1 23:43:00.886: Ce3/1 IPCP:    SecondaryDNS 68.28.50.11 (0x8306441C320B)
*Mar  1 23:43:00.886: Ce3/1 IPCP: State is Open
*Mar  1 23:43:00.886: Ce3/1 IPCP: Install negotiated IP interface address 70.12.159.189
*Mar  1 23:43:00.890: Ce3/1 IPCP: Install route to 68.28.57.69
*Mar  1 23:43:00.890: Ce3/1 IPCP: Add link info for cef entry 68.28.57.69
*Mar  1 23:43:01.878: %LINEPROTO-5-UPDOWN: Line protocol on Interface Cellular3/1, changed
state to up
*Mar  1 23:43:01.890: %LINEPROTO-5-UPDOWN: Line protocol on Interface Tunnel1, changed
state to up (68.28.50.11) [OK]

Type escape sequence to abort.
Sending 5, 100-byte ICMP Echos to 209.131.36.158, timeout is 2 seconds:
!!!!!
Success rate is 100 percent (5/5), round-trip min/avg/max = 188/196/204 ms
```

Additional References

Consult the following resources for related information about the 3G CDMA module or for technical assistance.

Release Notes

- Cisco 1000 Series Connected Grid Routers Release Notes

Hardware Overview and Installation Documents

- Cisco Connected Grid Modules
- Cisco CGR 1240 Hardware Installation Guide
- Cisco CGR 1120 Hardware Installation Guide

Supported Cisco Antennas and Accessories Documents

- Cisco Connected Grid Antennas Installation Guide

Cisco System Software Commands Documents

- Cisco Connected Grid Device Manager Installation and User Guide
- Cisco System Software
- Cisco 1000 Series Connected Grid Routers Software Configuration Guides

Regulatory, Compliance, and Safety Information

- Cisco Network Modules, Server Modules, and Interface Cards Regulatory Compliance and Safety Information

Retrieving the Electronic Serial Number

If your network provider requests the 11-digit decimal equivalent of your Electronic Serial Number (ESN), you must retrieve your ESN, then convert it to decimal notation. See Converting Hexadecimal ESN to Decimal Notation, page 37.

The ESN number is located directly on the modem label in hexadecimal notation. It can also be retrieved using the Cisco IOS CLI using the **show cellular 3/1 all** command.

The sample output below shows the IMEI number:

```
Router# show cellular 3/1 all

Hardware Information
====================
Modem Firmware Version = T1_0_3_2AP R361 CNSZXD00000061 2011/04/15 17:40:48
```

```
Modem Firmware Built = 04/15/11
Modem Hardware Version = 1.0
International Mobile Subscriber Identity (IMSI) = 0123456063
International Mobile Equipment Identity (IMEI) = 353567040032469 <-- Unique identifier for module
Factory Serial Number (FSN) = CC3291006141001
Modem status = Online
Current Modem Temperature = 33 deg C
Current Temperature State = Normal
```

Converting Hexadecimal ESN to Decimal Notation

If your network provider requests the 11-digit decimal equivalent of your Electronic Serial Number (ESN), you must retrieve your ESN, then convert it to decimal notation. See Retrieving the Electronic Serial Number, page 36.

To convert the ESN number from hexadecimal notation to decimal notation, follow this procedure:

Step 1 Start with the 8-digit HEX ESN # obtained from the label or using CLI, for example 0x603C9854. This number consists of two parts:

- 0x60—Serial number
- 3C9854—Manufacturer's code

Step 2 Convert manufacturer's code to decimal as shown:

Hexadecimal 0x60 equals decimal 96.

If decimal value is two digits only, prepend it with a zero to expand it to three digits.

Manufacturer's code is thus 096

Step 3 Convert the serial number to decimal, as shown in the example below:

Hexadecimal 0x3C9854 equals decimal 3971156

If decimal value is less than 8 digits, add enough zeros to make it into an 8 digit number.

Serial number is thus 03971156

Step 4 To obtain complete 11-digit decimal ESN notation, combine manufacturer code and serial number:

Manufacturer code: 096

Serial #: 03971156

Decimal ESN: 09603971156

Command Reference

This reference contains Cisco IOS commands for the 3G CDMA module.

For commands to enable CDMA event notifications, see Table 10.

- cdma ddtm
- cellular cdma activate otasp
- cellular cdma mode
- debug cellular messages all
- debug cellular messages async
- debug cellular messages callcontrol
- debug cellular messages data
- debug cellular messages dm
- debug cellular messages management
- show cellular all
- show cellular connection
- show cellular connection personality
- show cellular hardware
- show cellular network
- show cellular profile
- show cellular radio
- show cellular security
- show controllers cellular
- show interfaces cellular
- show run interface cellular

cdma ddtm

On CDMA modems, data transmission is disrupted by incoming voice calls if data dedicated transmission mode (DDTM) is disabled. You can enable DDTM mode so the modem will ignore incoming voice calls.

To enable DDTM on a CDMA modem, use the **cdma ddtm** command in configuration mode.

cdma ddtm

To disable DDTM, use the no form of this command.

Command Default

DDTM is enabled by default.

Command Modes

Configuration.

Command History

Release	Modification
15.1(4)M1	This command was introduced.

Usage Guidelines

Disable this feature only if you require the voice-initiated data callback feature.

Examples

The following example shows the configuration to enable the **cdma ddtm** command:

```
Router(config)#controller cellular 3/1
Router(config-controller)#cdma ddtm
```

The following example shows how to configure the **no cdma ddtm** command:

```
Router(config)#controller cellular 3/1
Router(config-controller)#no cdma ddtm
Router(config-controller)#end
```

The following output for the **show cellular connection** command shows that DDTM is enabled:

```
Router#show cellular 3/1 connection
Phone number of outgoing call =
HDR AT State = Inactive, HDR Session State = Close
HDR Session Info:
    UATI (Hex) = 0000:0000:0000:0000:0000:0000:0000:0000
    Color Code = 0, RATI = 0x0
    Session duration = 0 msecs, Session start = 0 msecs
    Session end = 0 msecs, Authentication Status = Not authenticated
HDR DRC Value = 0, DRC Cover = 0, RRI = Pilot only
Current Transmitted = 0 bytes, Received = 0 bytes
Total Transmitted = 0 KB, Received = 0 KB
Current Call Status = None
Current Call Duration = 0 secs
Total Call Duration = 376179855 seconds
Current Call Type =
Last Call Disconnect Reason = Modem offline
```

```
Last Connection Error = None
HDR DDTM (Data Dedicated Transmission Mode) Preference = On
Mobile IP Error Code (RFC-2002) = 0 (Registration accepted)
```

cellular cdma activate otasp

To activate a wireless account using over-the-air service provisioning (OTASP), use the **cellular cdma activate otasp** command in privileged EXEC mode.

Note The modem activation process is specific to the carrier. Check with your carrier if they support manual activation—using MDN, MSID, and MSN—or activation using OTASP.

cellular *slot/port* **cdma activate otasp** *phone_number*

Syntax Description

slot/port	Numeric values that indicate the router slot and port.
phone_number	Phone number that you must dial to begin activation using OTASP. This number is specific to a wireless provider. For Verizon Wireless, it is *22899.

Command Default

None.

Command Modes

Privileged EXEC

Command History

Release	Modification
12.4(11)XV	This command was introduced.
12.4(15)T	This command was integrated into Cisco IOS Release 12.4(15)T.

Usage Guidelines

You can verify the modem activation using the **show cellular** *slot/port* **all** command.

Note Use this command only if you are using an CGM-3G-CDMA-V interface card.

Examples

The following example shows output for the **cellular cdma activate otasp** command:

```
router# cellular 3/1 cdma activate otasp *22899

Beginning OTASP activation
OTASP number is *22899
router#
*Feb  6 23:18:45.393: OTA State = SPL unlock, Result = Success
*Feb  6 23:19:10.229: OTA State = PRL downloaded, Result = Success
*Feb  6 23:19:11.169: OTA State = Profile downloaded, Result = Success
*Feb  6 23:19:11.173: OTA State = MDN downloaded, Result = Success
*Feb  6 23:19:12.537: OTA State = Parameters commited to NVRAM, Result = Success
*Feb  6 23:19:14.613: Over the air provisioning complete; Result:Success
```

The following is a sample output from the **show cellular profile** command after the modem has been activated:

```
router#show cellular 3/1 profile 0

Profile Information
====================
Electronic Serial Number (ESN) = 0x603C6426
Modem activated = YES

Account Information:
=====================
Activation Date: 20070221
Phone Number (MDN) : 2029976763
Mobile Station Identifier (MSID) : 2029976763

Data Profile Info:
====================
Number of data profiles configured : 1
Current active data profile : 0

Data Profile 0 Information (Active)
=================================
NAI (Network Access Identifier) = 2029976763@vzw3g.com
MN-HA SS = Set
MN-HA SPI = 300
MN-AAA SS = Set
MN-AAA SPI = 2
Reverse Tunneling Preference = Set
Home Address = 0.0.0.0
Primary Home Agent Address = 255.255.255.255
Secondary Home Agent Address = 255.255.255.255
```

Related Commands

Command	Description
show cellular profile	Displays the cellular profile information.

cellular cdma mode

To configure the modem mode to connect to 1xRTT, EVDO or hybrid services, use the **cellular cdma mode** command in privileged EXEC mode.

cellular *slot/port* **cdma mode <hybrid | EVDO-only | 1xRTT-only>**

Syntax Description

slot/port	Numeric values that indicate the router slot and port.
hybrid	Connect to EVDO/1xRTT services (Default Mode)
EVDO-only	Connect only to EVDO service
1xRTT-only	Connect only to 1xRTT service

Command Default

Hybrid

Command Modes

Privileged EXEC

Command History

Release	Modification
12.4(22)YB1	This command was introduced.

Usage Guidelines

This command is executed only upon confirmation from the user. A service mode change is followed by a modem reset.

Examples

The following example shows output for the **cellular** *slot/port* **cdma mode** command:

```
Router#cellular 3/1 cdma mode ?
  1xRTT   Modem will connect to 1xRTT only service
  evdo    Modem will connect to EVDO only service
  hybrid  Modem will connect to EVDO and 1xRTT service (default behavior)
```

Table 11 Output Description for cellular cdma mode Command

Field	Description
1xRTT	Modem will connect to 1xRTT only service
EVDO	Modem will connect to EVDO only service
Hybrid	Modem will connect to EVDO and 1xRTT service (default)

Related Commands

Command	Description
cellular cdma activate otasp	Activates a cellular account using the over the air service provisioning (OTASP).

debug cellular messages all

To print all Cisco IOS driver debug messages, use the **debug cellular messages all** command in EXEC mode.

debug cellular *slot/port* **messages all**

Syntax Description

slot/port	Numeric values that indicate the router slot and port.

Command Default

None

Command Modes

EXEC

Command History

Release	Modification
12.4(11)XV	This command was introduced.
12.4(15)T	This command was integrated into Cisco IOS Release 12.4(15)T.

Usage Guidelines

Use this command for debugging purposes only.

Related Commands

Command	Description
debug cellular messages async	Debugs cellular async.
debug cellular messages data	Prints Cisco IOS data path debug messages.
debug cellular messages management	Prints management path messages, such as CnS.
debug cellular messages dm	Prints diagnostics monitor (DM) messages from the Qualcomm CDMA chipset.

debug cellular messages async

To debug cellular async, use the **debug cellular messages async** command in EXEC mode.

debug cellular *slot/port* **messages async**

Syntax Description

slot/port	Numeric values that indicate the router slot and port.

Command Default

None

Command Modes

EXEC

Command History

Release	Modification
12.4(11)XV	This command was introduced.
12.4(15)T	This command was integrated into Cisco IOS Release 12.4(15)T.

Usage Guidelines

Use this command for debugging purposes only.

Related Commands

Command	Description
debug cellular messages all	Prints all Cisco IOS driver debug messages.
debug cellular messages data	Prints Cisco IOS data path debug messages.
debug cellular messages management	Prints management path messages, such as CnS.
debug cellular messages dm	Prints diagnostics monitor (DM) messages from the Qualcomm CDMA chipset.

debug cellular messages callcontrol

To debug cellular direct IP call control, use the **debug cellular messages callcontrol** command in privileged EXEC mode.

debug cellular *slot/port* **messages callcontrol**

Syntax Description

slot/port	Numeric values that indicate the router slot and port.

Command Default

None

Command Modes

Privileged EXEC

Command History

Release	Modification
12.4(11)XV	This command was introduced.
12.4(15)T	This command was integrated into Cisco IOS Release 12.4(15)T.

Usage Guidelines

Use this command for debugging purposes only.

Related Commands

Command	Description
debug cellular messages all	Prints all Cisco IOS driver debug messages.
debug cellular messages async	Debugs cellular async.
debug cellular messages management	Prints management path messages, such as CnS.

debug cellular messages data

To print Cisco IOS data path debug messages, use the **debug cellular messages data** command in EXEC mode.

show cellular *slot/port* **messages data**

Syntax Description

slot/port	Numeric values that indicate the router slot and port.

Command Default

None

Command Modes

EXEC

Command History

Release	Modification
12.4(11)XV	This command was introduced.
12.4(15)T	This command was integrated into Cisco IOS Release 12.4(15)T.

Usage Guidelines

Use this command for debugging purposes only.

Related Commands

Command	Description
debug cellular messages all	Prints all Cisco IOS driver debug messages.
debug cellular messages async	Debugs cellular async.
debug cellular messages management	Prints management path messages, such as CnS.
debug cellular messages dm	Prints diagnostics monitor (DM) messages from the Qualcomm CDMA chipset.

debug cellular messages dm

To print Diagnostics Monitor (DM) messages from the Qualcomm CDMA chipset, use the **debug cellular messages dm** command in EXEC mode.

debug cellular *slot/port* **messages dm**

Syntax Description

slot/port	Numeric values that indicate the router slot and port.

Command Default

There is no default for this command.

Command Modes

EXEC

Command History

Release	Modification
12.4(11)XV	This command was introduced.
12.4(15)T	This command was integrated into Cisco IOS Release 12.4(15)T.

Usage Guidelines

Use this command for debugging purposes only.

Related Commands

Command	Description
debug cellular messages all	Prints all Cisco IOS driver debug messages.
debug cellular messages async	Debugs cellular async.
debug cellular messages data	Prints Cisco IOS data path debug messages.
debug cellular messages management	Prints management path messages, such as CnS.

debug cellular messages management

To print management path messages, such as CnS, use the **debug cellular messages management** command in EXEC mode.

debug cellular *slot/port* **messages management**

Syntax Description

slot/port	Numeric values that indicate the router slot and port.

Command Default

None

Command Modes

EXEC

Command History

Release	Modification
12.4(11)XV	This command was introduced.
12.4(15)T	This command was integrated into Cisco IOS Release 12.4(15)T.

Usage Guidelines

Use this command for debugging purposes only.

Related Commands

Command	Description
debug cellular messages all	Prints all Cisco IOS driver debug messages.
debug cellular messages async	Debugs cellular async.
debug cellular messages data	Prints Cisco IOS data path debug messages.

show cellular all

To display all the modem information in one listing, use the **show cellular all** command in privileged EXEC mode.

show cellular *slot/port* **all**

Syntax Description

slot/port	Numeric values that indicate the router slot and port.

Command Default

None

Command Modes

Privileged EXEC

Command History

Release	Modification
12.4(11)XV	This command was introduced.
12.4(15)T	This command was integrated into Cisco IOS Release 12.4(15)T.

Usage Guidelines

The command usage is the same for Global System for Mobile Communications (GSM) and code division multiple access (CDMA), although the output is different for each.

Examples

The following example shows output for the **show cellular all** command:

```
router# show cellular 3/1 all

Hardware Information
====================
Modem Firmware Version = p2813301
Modem Firmware built = 06-24-10
Hardware Version = MC5728V Rev 1.0
Electronic Serial Number (ESN) = 0x60D22720 [09613772576]
Preferred Roaming List (PRL) Version = 53316
PRI SKU ID = 535477
Carrier ID = 5  Carrier Name = Verizon
Current Modem Temperature = 39 degrees Celsius
Endpoint Port Map = 75

Profile Information
====================
Electronic Serial Number (ESN) = 0x6032688F
Modem activated = YES

Account Information:
=====================
Activation Date: Not available
Phone Number (MDN) : 9135938079
Mobile Station Identifier (MSID) : 9135938079
```

```
Data Profile Info:
=====================
Number of data profiles configured : 2
Current active data profile : 1

Data Profile 0 Information
==================================
NAI (Network Access Identifier) = 6032688F@hcm.verizon.com
MN-HA SS = Set
MN-HA SPI = 1234
MN-AAA SS = Set
MN-AAA SPI = 1234
Reverse Tunneling Preference = Set
Home Address = 0.0.0.0
Primary Home Agent Address = 68.28.15.12
Secondary Home Agent Address = 68.28.31.12

Data Profile 1 Information (Active)
==================================
NAI (Network Access Identifier) = productmarketing432@verizon.com
MN-HA SS = Set
MN-HA SPI = 1234
MN-AAA SS = Set
MN-AAA SPI = 1234
Reverse Tunneling Preference = Set
Home Address = 0.0.0.0
Primary Home Agent Address = 68.28.81.76
Secondary Home Agent Address = 68.28.89.76


Data Connection Information
===========================
Phone number of outgoing call =
HDR AT State = Idle, HDR Session State = Open
HDR Session Info:
    UATI (Hex) = 0084:0AC0:0000:0000:000A:05DC:A821:DCFC
    Color Code = 32, RATI = 0xFFFFFFFF
    Session duration = 0 msecs, Session start = 0 msecs
    Session end = 0 msecs, Authentication Status = Not authenticated
HDR DRC Value = 11, DRC Cover = 0, RRI = Pilot only
Current Transmitted = 0 bytes, Received = 0 bytes
Total Transmitted = 0 KB, Received = 0 KB
Current Call Status = DISCONNECTED
Current Call Duration = 30 secs
Total Call Duration = 4482879 seconds
Current Call State =
Last Call Disconnect Reason = Base station release (No reason)
Last Connection Error = None
HDR DDTM (Data Dedicated Transmission Mode) Preference = Off
Mobile IP Error Code (RFC-2002) = 0 (Registration accepted)

Network Information
===================
Current Service = 1xEV-DO (Rev A) and 1xRTT
Current Roaming Status(1xRTT) = HOME, (HDR) = HOME
Current Idle Digital Mode = HDR
Current System Identifier (SID) = 4183
Current Network Identifier (NID) = 87
Current Call Setup Mode = Mobile IP only
Serving Base Station Longitude = 0 deg 0 min 0 sec
Serving Base Station Latitude = 0 deg 0 min 0 sec
Current System Time = Tue Feb 6 15:12:18 2007

Radio Information
```

```
=================
1xRTT related info
------------------
Current RSSI = -94 dBm, ECIO = -8 dBm
Current Channel Number = 50
Current Channel State = Acquired
Current Band Class = Band Class 1

HDR (1xEVDO) related info
-------------------------
Current RSSI = -83 dBm, ECIO = -0 dBm
Current Channel Number = 25
Current Band Class = Band Class 1
Sector ID (Hex) = 0084:0AC0:0000:0000:000A:05DC:A801:1202
Subnet Mask = 104, Color Code = 32, PN Offset = 240
Rx gain control(Main) = 0 dBm, Diversity = Unavailable
Tx total power = -2 dBm, Tx gain adjust = 1536 dBm
Carrier to interference (C/I) ratio = 7

Modem Security Information
==========================
Modem PIN Security UNLOCKED
Power-up lock DISABLED
router#
```

Related Commands

Command	Description
cellular cdma activate otasp	Activates a cellular account using the over the air service provisioning (OTASP).
show cellular hardware	Displays the cellular modem hardware information.
show cellular network	Displays the cellular network (base station) information.
show cellular profile	Displays the cellular profile information.
show cellular radio	Displays the cellular modem radio statistics.
show cellular security	Displays the modem lock state.
show controllers cellular	Displays the SMS messages received by the cellular modem.

show cellular connection

To display the current active connection state and data statistics, use the **show cellular connection** command in privileged EXEC mode.

show cellular *slot/port* **connection**

Syntax Description

slot/port	Numeric values that indicate the router slot and port.

Command Default

None

Command Modes

Privileged EXEC

Command History

Release	Modification
12.4(11)XV	This command was introduced.
12.4(15)T	This command was integrated into Cisco IOS Release 12.4(15)T.
15.1(1)T	This command was integrated into Cisco IOS Release 15.1(1)T.

Usage Guidelines

The command usage is the same for Global System for Mobile Communications (GSM) and code division multiple access (CDMA), although the output is different for each.

Examples

The following example shows output for the **show cellular connection** command:

```
router# show cellular 3/1 connection

Phone number of outgoing call =
HDR AT State = Idle, HDR Session State = Open
HDR Session Info:
    UATI (Hex) = 0084:0AC0:0000:0000:000A:05DC:A821:DCFC
    Color Code = 32, RATI = 0xFFFFFFFF
    Session duration = 0 msecs, Session start = 0 msecs
    Session end = 0 msecs, Authentication Status = Not authenticated
HDR DRC Value = 11, DRC Cover = 0, RRI = Pilot only
Current Transmitted = 0 bytes, Received = 0 bytes
Total Transmitted = 0 KB, Received = 0 KB
Current Call Status = DISCONNECTED
Current Call Duration = 30 secs
Total Call Duration = 4482879 seconds
Current Call State =
Last Call Disconnect Reason = Base station release (No reason)
Last Connection Error = None
HDR DDTM (Data Dedicated Transmission Mode) Preference = Off
Mobile IP Error Code (RFC-2002) = 0 (Registration accepted)
router#
```

Table 12 describes each output field.

Table 12 Output Description for show cellular connection Command

Field	Description
Phone number of outgoing call	Shows the phone number of the data call dialed.
HDR AT State	Indicates the AT state. Will show as CONNECTED when the CONNECT is received from the modem while dialing out. This is valid only for 1xEVDO.
HDR Session State	Will indicate as OPEN once the HDR session is established. This is valid only for 1xEVDO
UATI	Unicast Access Terminal Identifier (UATI) obtained by the modem or access terminal (AT) from the base station during session establishment.
Color Code	HDR session color code for the sector.
RATI	HDR Random Access Terminal Identifier used for opening a session.
Session Duration	HDR session duration in milliseconds.
Session Start	Phone uptime in units of milliseconds at session start.
Session End	Phone uptime in units of milliseconds at session end.
Authentication Status	Modem or access terminal authentication status with the base station.
HDR DRC Value	The data rate channel value specified by the access terminal. The access terminal uses DRC value to specify the requested transmission rate
DRC Cover	DRC cover value used by the access terminal to specify the transmitting sector.
RRI	Indicates the rate of the reverse traffic data channel.
Current Transmitted	Number of bytes transmitted by the modem to the base station. This will be cleared when the call is disconnected.
Current Received	Number of bytes received by the modem from the base station. This will be cleared when the call is disconnected.
Current call status	Current call status of the modem, such as CONNECTED, DISCONNECTED, DORMANT, CONNECTING, or ERROR.
Privacy Mode	Current privacy status of the call in progress.
Service Option	Service option for the call in progress.
Current Call Duration	Duration of the call in progress. A call status of DISCONNECTED displays the call duration of the last call.

Table 12 Output Description for show cellular connection Command (continued)

Field	Description
Total Transmitted	Total number of kilobytes transmitted from the modem. This will be cleared by the **clear counters** command.
Total Received	Total number of kilobytes received by the modem. This will be cleared by the **clear counters** command.
Total Call Duration	Total duration of calls made from the modem. This will be updated when the current call in progress is disconnected.
Current Call State	Indicates the type of call made.
Last Call Disconnect Reason	Indicates why the last call was disconnected.
Last Connection Error	Indicates the error code if the call status indicates an error.
Mobile IP Error Code	Indicates the error code in accordance with RFC-2002 if the call is a mobile IP call. **Note** The current call setup mode is in Simple IP only. In this case **show cellular connection** will not display Mobile IP Error Code. Mobile IP error code is displayed when call setup mode is either "Mobile IP only" mode or "Mobile IP Preferred with SIP fallback" mode.

Related Commands

Command	Description
show cellular hardware	Displays the cellular modem hardware information.
show cellular network	Displays the cellular network (base station) information.
show cellular profile	Displays the cellular profile information.
show cellular radio	Displays the cellular modem radio statistics.
show cellular security	Displays the modem lock state.
show controllers cellular	Displays CGM hardware- and driver-specific information.

show cellular connection personality

To display the negotiated personalities when the 1xEVDO-Rev A service is acquired by the modem, use the **show cellular connection personality** command in EXEC mode.

show cellular *slot/port* **connection personality**

Syntax Description

slot/port	Numeric values that indicate the router slot and port.

Command Default

There is no default for this command.

Command Modes

EXEC

Usage Guidelines

None

Examples

The following example shows output for the **show cellular connection personality** command:

```
c2800#show cellular 3/1 connection personality
No Active Personalities Negotiated
c2800#
```

Related Commands

Command	Description
cellular cdma activate otasp	Activates a cellular account using the over the air service (OTA) procedure or over the air service provisioning (OTASP).
debug cellular messages all	Displays the cellular modem hardware information.
debug cellular messages data	Displays the cellular network (base station) information.
debug cellular messages management	Displays the cellular profile information.
show cellular radio	Displays the cellular modem radio statistics.
show cellular security	Displays the modem lock state.
show controllers cellular	Displays the SMS messages received by the cellular modem.

show cellular hardware

To display the cellular modem hardware information, use the **show cellular hardware** command in privileged EXEC mode.

show cellular *slot/port* **hardware**

Syntax Description

slot/port	Numeric values that indicate the router slot and port.

Command Default

None

Command Modes

Privileged EXEC

Command History

Release	Modification
12.4(11)XV	This command was introduced.
12.4(15)T	This command was integrated into Cisco IOS Release 12.4(15)T.

Usage Guidelines

The command usage is the same for Global System for Mobile Communications (GSM) and code division multiple access (CDMA), although the output is different for each.

Examples

The following example shows output for the **show cellular hardware** command:

```
router# show cellular 3/1 hardware

router# show cellular 2/1 hardware
Modem Firmware Version = p2813301
Modem Firmware built = 06-24-10
Hardware Version = MC5728V Rev 1.0
Electronic Serial Number (ESN) = 0x60D22720 [09613772576]
Preferred Roaming List (PRL) Version = 53316
PRI SKU ID = 535477
Carrier ID = 5  Carrier Name = Verizon
Current Modem Temperature = 39 degrees Celsius
Endpoint Port Map = 75
```

Table 13 describes each output field.

Table 13 Output Description for show cellular hardware command

Field	Description
Modem Firmware Version	Firmware version of the modem.
Modem Firmware Built	Date firmware was built in *mm-dd-yy* format.
Hardware Version	Modem hardware version.
Electronic Serial Number	Unique serial number of the modem.

Table 13 Output Description for show cellular hardware command (continued)

Field	Description
Preferred Roaming List (PRL) Version	PRL version is unique to a service provider. This indicates to the modem which channels the modem should scan.
PRI SKU ID	Product identifier for the modem.
Carrier ID	Number assigned to the service provider.
Current Modem Temperature	Radio temperature of the modem in degrees Celsius.
Endpoint Port Map	Modem USB endpoint port map information. This information is used between the modem and host software (Cisco IOS).

Related Commands

Command	Description
show cellular radio	Displays the cellular modem radio statistics.
show cellular security	Displays the modem lock state.
show controllers cellular	Displays 3G CDMA module hardware- and driver-specific information.

show cellular network

To display information about the carrier network and service, use the **show cellular network** command in privileged EXEC mode.

show cellular *slot/port* **network**

Syntax Description

slot/port	Numeric values that indicate the router slot and port.

Command Default

None

Command Modes

Privileged EXEC

Command History

Release	Modification
12.4(11)XV	This command was introduced.
12.4(15)T	This command was integrated into Cisco IOS Release 12.4(15)T.

Usage Guidelines

The command usage is the same for Global System for Mobile Communications (GSM) and code division multiple access (CDMA), although the outputs differ.

Examples

The following example shows output for the **show cellular network** command:

```
router# show cellular 3/1 network

Current Service = 1xEV-DO (Rev A) and 1xRTT
Current Roaming Status(1xRTT) = HOME, (HDR) = HOME
Current Idle Digital Mode = HDR
Current System Identifier (SID) = 4183
Current Network Identifier (NID) = 87
Current Call Setup Mode = Mobile IP only
Serving Base Station Longitude = 0 deg 0 min 0 sec
Serving Base Station Latitude = 0 deg 0 min 0 sec
Current System Time = Tue Feb 6 15:16:9 2013
```

Table 14 Output Description for show cellular network Command

Field	Description
Current Service	Service attached by the modem.
Current Roaming Status	Indicates whether the modem is in the home network or roaming.
Current Idle Digital Mode	Idle mode of the modem.
Current System Identifier	SID received by the modem (applicable only for 1xRTT).

Table 14 Output Description for show cellular network Command

Field	Description
Current Network Identifier	NID received by the modem (applicable only for 1xRTT).
Current BSS Longitude/Latitude	Geographic location of the BSS (if this information is received from the BSS).
Current System Time	System time received from the base station.

Related Commands

Command	Description
show cellular radio	Displays the cellular modem radio statistics.
show cellular security	Displays the modem lock state.
show controllers cellular	Displays 3G CDMA module hardware and driver-specific information.

show cellular profile

To display the cellular profile information, use the **show cellular profile** command in privileged EXEC mode.

show cellular *slot/port* **profile** <*profile number*> | **all**

Syntax Description

slot/port	Numeric values that indicate the router slot and port.
profile number	Profile number for the profile to be displayed.
all	Displays information of all profiles in the modem. The maximum number of supported profiles is 6. **Note** For CGM-3G-CDMA-V, only one profile is supported, so only one profile is displayed.

Command Default

None

Command Modes

Privileged EXEC

Command History

Release	Modification
12.4(11)XV	This command was introduced.
12.4(15)T	This command was integrated into Cisco IOS Release 12.4(15)T.
12.4(22)YB1	This command was modified to display all profiles in the modem.

Usage Guidelines

The command usage is the same for Global System for Mobile Communications (GSM) and code division multiple access (CDMA), although the output is different for each.

Examples

The following example shows output for the **show cellular profile** command:

```
router# show cellular 3/1 profile

Electronic Serial Number (ESN) = 0x6032688F [09603303567]
Modem activated = YES

Account Information:
=====================
Activation Date: Not available
Phone Number (MDN) : 1234567890
Mobile Station Identifier (MSID) : 1234567890

Data Profile Info:
====================
Number of data profiles configured : 2
Current active data profile : 1

Data Profile 0 Information
```

```
==================================
NAI (Network Access Identifier) = 6032688F@hcm.verizon.com
MN-HA SS = Set
MN-HA SPI = 1234
MN-AAA SS = Set
MN-AAA SPI = 1234
Reverse Tunneling Preference = Set
Home Address = 0.0.0.0
Primary Home Agent Address = 68.28.15.12
Secondary Home Agent Address = 68.28.31.12

Data Profile 1 Information (Active)
==================================
NAI (Network Access Identifier) = productmarketing432@verizon.com
MN-HA SS = Set
MN-HA SPI = 1234
MN-AAA SS = Set
MN-AAA SPI = 1234
Reverse Tunneling Preference = Set
Home Address = 0.0.0.0
Primary Home Agent Address = 68.28.81.76
Secondary Home Agent Address = 68.28.89.76
```

"*" Indicates the default profile.

Table 15 describes the output fields from the command.

Table 15 Output Description for show cellular profile Command

Field	Description
Electronic Serial Number	A unique serial number for the CDMA modem displayed in decimal and hexadecimal formats.
Modem Activated	Indicates the activation status of the modem. Yes indicates that the modem is activated on the carrier network.
Data Profile	A data profile consists of the mobile IP (MIP) settings for the data connection. These settings are populated on the modem by the network using OTASP.
ProvDate	Date the modem was provisioned, in *yyyy/mm/dd* format.
MDN	Mobile Directory Number assigned to the modem by the carrier during provisioning.
MIN	Mobile Identity Number assigned to the modem by the carrier during provisioning

Related Commands

Command	Description
cellular cdma activate otasp	Activates a cellular account using the over the air service provisioning (OTASP).

show cellular radio

To display the cellular modem radio statistics, use the **show cellular radio** command in user privileged EXEC mode.

show cellular *slot/port* **radio [history <all | per-hour | per-min | per-sec>]**

Syntax Description

slot/port	Numeric values that indicate the router slot and port.
history	Displays the RSSI history.
all	Complete RSSI history.
per-hour	Per-hour RSSI history.
per-min	Per-minute RSSI history.
per-sec	Per-second RSSI history.

Command Default

None

Command Modes

Privileged EXEC

Command History

Release	Modification
12.4(11)XV	This command was introduced.
12.4(15)T	This command was integrated into Cisco IOS Release 12.4(15)T.

Usage Guidelines

The command usage is the same for Global System for Mobile Communications (GSM) and code division multiple access (CDMA), although the output is different for each.

Examples

The following example shows output for the **show cellular radio** command:

```
router#show cellular 3/1 radio
1xRTT related info
------------------
Current RSSI = -95 dBm, ECIO = -6 dBm
Current Channel Number = 50
Current Channel State = Acquired
Current Band Class = Band Class 1

HDR (1xEVDO) related info
-------------------------
Current RSSI = -88 dBm, ECIO = -2 dBm
Current Channel Number = 25
Current Band Class = Band Class 1
Sector ID (Hex) = 0084:0AC0:0000:0000:000A:05DC:A801:1202
Subnet Mask = 104, Color Code = 32, PN Offset = 240
Rx gain control(Main) = 0 dBm, Diversity = Unavailable
Tx total power = -2 dBm, Tx gain adjust = 1536 dBm
Carrier to interference (C/I) ratio = 2
```

Table 16 Output Description for show cellular radio Command

Field	Description
Current RSSI	Current radio signal strength in dbm (-125 dbm indicates no signal).
Current ECIO	Current energy per chip (ECIO) in dbm.
Current Channel Number	Current channel number to which the modem is attached to the base station.
Current Channel State	Indicates whether the modem is scanning or has acquired the channel.
Current Band Class	Current band class that the modem is attached to.
Sector ID	Sector ID of the base station to which the modem is attached.
Subnet Mask	Subnet mask of the sector.
Color Code	Color code of the sector.
PN Offset	PN offset for the sector.
Rx Gain Control	Received gain control for the modem.
Tx Total Power	Transmitted power.

Related Commands

Command	Description
show cellular all	Displays the consolidated information about the modem.
show controllers cellular	Displays 3G CDMA modem hardware and driver-specific information.

show cellular security

To display the SIM status (only for CGM-3G-GSM) and modem lock state, use the **show cellular security** command in privileged EXEC mode.

show cellular *slot/port* **security**

Syntax Description

slot/port	Numeric values that indicate the router slot and port.

Command Default

None

Command Modes

Privileged EXEC

Command History

Release	Modification
12.4(11)XV	This command was introduced.
12.4(15)T	This command was integrated into Cisco IOS Release 12.4(15)T.

Usage Guidelines

The command usage is the same for Global System for Mobile Communications (GSM) and code division multiple access (CDMA), although the output is different for each.

Examples

The following example shows output for the **show cellular security** command:

```
router# show cellular 3/1 security
Modem PIN Security UNLOCKED
Power-up lock DISABLED
```

Table 17 describes the output for this command.

Table 17 Output Description for show cellular security Command

Field	Description
Modem PIN Security	If the modem is locked, you cannot make calls without unlocking.
Power-up Lock	Shows whether the modem will be locked on power-up.

Related Commands

Command	Description
show cellular all	Displays the consolidated information about the modem.

show controllers cellular

To display 3G CDMA module and driver-specific information, use the **show controllers cellular** command in privilege EXEC mode.

show controllers cellular *slot/port*

Syntax Description

slot/port	Numeric values that indicate the router slot and port.

Command Default

There is no default for this command.

Command Modes

Privilege EXEC

Command History

Release	Modification
12.4(11)XV	This command was introduced.
12.4(15)T	This command was integrated into Cisco IOS Release 12.4(15)T.

Usage Guidelines

Use this command to capture the output for debugging or troubleshooting purposes only.

Related Commands

Command	Description
show interfaces cellular	Displays statistics for the cellular interfaces.
show run interface cellular	Displays the current running configuration for the cellular interface.

show interfaces cellular

To display statistics for the cellular interface, use the **show interfaces cellular** command in EXEC mode.

show interfaces cellular *slot/port*

Syntax Description

slot/port	Numeric values that indicate the router slot and port.

Command Default

There is no default for this command.

Command Modes

EXEC

Command History

Release	Modification
12.4(11)XV	This command was introduced.
12.4(15)T	This command was integrated into Cisco IOS Release 12.4(15)T.

Usage Guidelines

When you enter this command, encapsulation should be PPP and all signals, such as DCD, DSR, DTR, RTS, and CTS, should be up during normal operation.

Examples

The following example shows the output for the **show interfaces cellular** command:

```
router#   show int cellular 3/1
Cellular3/1 is up (spoofing), line protocol is up (spoofing)
  Hardware is EVDO Rev A/Rel 0/1xRTT-800/1900MHz / SP
  Internet address will be negotiated using IPCP
  MTU 1500 bytes, BW 9 Kbit, DLY 100000 usec,
     reliability 255/255, txload 1/255, rxload 1/255
  Encapsulation PPP, LCP Closed, loopback not set
  Keepalive not set
  Last input never, output never, output hang never
  Last clearing of "show interface" counters never
  Input queue: 0/75/0/0 (size/max/drops/flushes); Total output drops: 0
  Queueing strategy: weighted fair
  Output queue: 0/1000/64/0 (size/max total/threshold/drops)
     Conversations  0/0/16 (active/max active/max total)
     Reserved Conversations 0/0 (allocated/max allocated)
     Available Bandwidth 6 kilobits/sec
  30 second input rate 0 bits/sec, 0 packets/sec
  30 second output rate 0 bits/sec, 0 packets/sec
     0 packets input, 0 bytes, 0 no buffer
     Received 0 broadcasts, 0 runts, 0 giants, 0 throttles
     0 input errors, 0 CRC, 0 frame, 0 overrun, 0 ignored, 0 abort
     0 packets output, 0 bytes, 0 underruns
     0 output errors, 0 collisions, 0 interface resets
     0 output buffer failures, 0 output buffers swapped out
     0 carrier transitions
     DCD=up  DSR=up  DTR=up  RTS=up  CTS=up
```

Related Commands

Command	Description
show cellular radio	Displays the cellular modem radio statistics.
show controllers cellular	Displays 3G CDMA module hardware and driver-specific information.
show run interface cellular	Displays the current running configuration for the cellular interface.

show run interface cellular

To see the current running configuration for the cellular interface, use the **show run interface cellular** command in privileged EXEC mode.

show run interface cellular *slot/port*

Syntax Description

slot/port	Numeric values that indicate the router slot and port.

Command Default

There is no default for this command.

Command Modes

Privileged EXEC

Command History

Release	Modification
12.4(11)XV	This command was introduced.
12.4(15)T	This command was integrated into Cisco IOS Release 12.4(15)T.

Examples

The following example shows the output of the **show run interface cellular** command:

```
router#show running-config interface cellular 3/1
interface Cellular3/1
 ip address negotiated
 ip access-group 10 out
 ip nat outside
 ip virtual-reassembly
 encapsulation ppp
 no ip mroute-cache
 load-interval 30
 dialer in-band
 dialer idle-timeout 2147483
 dialer string cdma
 dialer-group 2
 async mode interactive
 no peer default ip address
 fair-queue
 ppp ipcp dns request
 routing dynamic
end router#
```

Related Commands

Command	Description
show controllers cellular	Displays 3G CDMA module hardware and driver-specific information.
show interfaces cellular	Displays statistics for the cellular interfaces.

Technical Assistance

The Cisco Support and Documentation website provides online resources to download documentation, software, and tools. Use these resources to install and configure the software and to troubleshoot and resolve technical issues with Cisco products and technologies. Access to most tools on the Cisco Support and Documentation website requires a Cisco.com user ID and password.

http://www.cisco.com/cisco/web/support/index.html

Cisco and the Cisco Logo are trademarks of Cisco Systems, Inc. and/or its affiliates in the U.S. and other countries. A listing of Cisco's trademarks can be found at www.cisco.com/go/trademarks. Third party trademarks mentioned are the property of their respective owners. The use of the word partner does not imply a partnership relationship between Cisco and any other company. (1005R)

Any Internet Protocol (IP) addresses and phone numbers used in this document are not intended to be actual addresses and phone numbers. Any examples, command display output, network topology diagrams, and other figures included in the document are shown for illustrative purposes only. Any use of actual IP addresses or phone numbers in illustrative content is unintentional and coincidental.

No combinations are authorized or intended under this document.

© 2014 Cisco Systems, Inc. All rights reserved.