Ultrasonic Distance Sensor

EM400-UDL

User Guide

Safety Precautions

Milesight will not shoulder responsibility for any loss or damage resulting from not following the instructions of this operating guide.

- The device must not be disassembled or remodeled in any way.
- In order to protect the security of the device, please change the device password when first configuration. Default password is 123456.
- The device is not intended to be used as a reference sensor, and Milesight won't should responsibility for any damage which may result from inaccurate readings.
- Do not place the device close to objects with naked flames.
- Do not place the device in where the temperature is below/above the operating range.
- Make sure both batteries are newest when install, or battery life will be reduced.
- The device must never be subjected to shocks or impacts.

Declaration of Conformity

EM400-UDL is in conformity with the essential requirements and other relevant provisions of the CE, FCC, and RoHS.

Copyright © 2011-2023 Milesight. All rights reserved.

All information in this guide is protected by copyright law. Whereby, no organization or individual shall copy or reproduce the whole or part of this user guide by any means without written authorization from Xiamen Milesight IoT Co., Ltd.

For assistance, please contact

Milesight technical support:

Email: iot.support@milesight.com

Support Portal: support.milesight-iot.com

Tel: 86-592-5085280

Fax: 86-592-5023065

Address: Building C09, Software Park III, Xiamen 361024, China

Revision History

Date	Doc Version	Description
March 16, 2023	V 1.0	Initial version
June 15, 2023	V 1.1	Add EM400-UDL NB/Cat M Version

Contents

1. Product Introduction 4
1.1 Overview 4
1.2 Features 4
2. Hardware Introduction 4
2.1 Packing List 4
2.2 Hardware Overview 5
2.3 Dimensions (mm) 5
2.4 Power Button 5
3. SIM Installation (NB Version Only) 5
4. Operation Guide 6
4.1 NFC Configuration 6
4.2 Basic Settings 7
4.3 Communication Settings 8
4.3.1 LoRaWAN Settings (LoRaWAN® Version Only) 8
4.3.2 Application Mode Settings (NB Version Only) 11
4.4 Advanced Settings 12
4.4.1 Calibration Settings 12
4.4.2 Threshold Settings 13
4.5 Maintenance 14
4.5.1 Upgrade 14
4.5.2 Backup 14
4.5.3 Reset to Factory Default 15
5. Installation 16
6. Communication Protocol 17
6.1 LoRaWAN® Version 17
6.1.1 Uplink Data 17
6.1.2 Downlink Commands 19
6.2 NB Version 20
6.2.1 AWS/MQTT Topics 20
6.2.2 Uplink Data 20
6.2.3 Downlink Commands 23

1. Product Introduction

1.1 Overview

EM400-UDL is a designed non-contact ultrasonic distance sensor. With this low power consumption technology, EM400-UDL can work up to 10 years with two 9000 mAh batteries. With multiple probes optional and different detecting ranges, it can satisfy different requirements.

With high protection IP rating and waterproof enclosure, EM400-UDL is widely used for outdoor applications such as water level, fill level of tanks and silos, presence of objects or snow level. Combining with Milesight IoT Cloud solution, users can manage all sensor data remotely and visually.

1.2 Features

- Optional probes vary from 25 to 1000cm for multiple applications
- Equipped with NTC thermistor for the detection and alarm of burning
- Built-in 3-axis accelerometer sensor to monitor device tilt status
- Damp-proof coating inside and IP67 waterproof enclosure for outdoor applications
- Built-in two 9000 mAh replaceable batteries and work for 10 years without replacement
- Equipped with NFC for one touch configuration, support card emulation mode
- Equipped with GNSS positioning (NB version only)
- Function well with standard LoRaWAN® gateways and network servers (LoRaWAN® version only)
- Compatible with Milesight IoT Cloud

2. Hardware Introduction

2.1 Packing List

1 × EM400-UDL Device

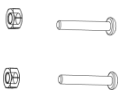

2 × Mounting Kits

1 × Warranty Card

1 × Quick Guide

If any of the above items is missing or damaged, please contact your sales representative.

2.2 Hardware Overview

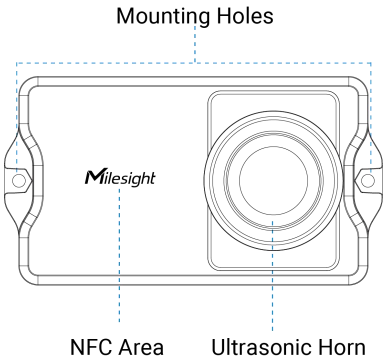

2.3 Dimensions (mm)

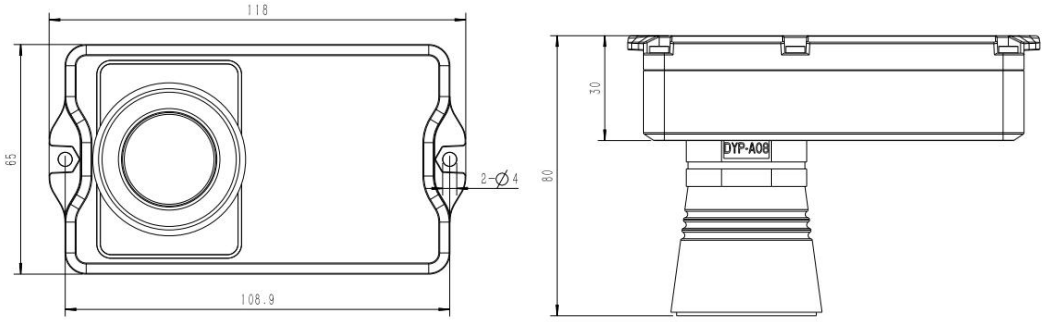

2.4 Power Button

EM400-UDL can be switched on/off via NFC. Besides, users can use power button to switch on/off and reset the device manually.

Function	Action	LED Indication
Switch On	Press and hold the button for more than 3 seconds.	Off → On
Switch Off	Press and hold the button for more than 3 seconds.	On → Off
Reset	Press and hold the button for more than 10 seconds.	Quickly Blinks
Check On/Off Status	Quickly press the power button.	Light On: Device is on Light Off: Device is off

3. SIM Installation (NB Version Only)

Release the screws and back cover, insert the SIM card (3FF), then replace the back cover to the device and fix the screws.

Note:

1) PSM (Power Saving Mode) is required for the SIM card.
2) The device does not support hot plugging (also called hot swapping), please reboot the device after inserting the SIM card.

3) When a new SIM card is inserted to the device for the first time, it will take about 2 minutes to register to network; next time the registration time will be shorten to 30s.
4) When the device does not send data, the device will go to sleep mode and the network status will be unregistered.

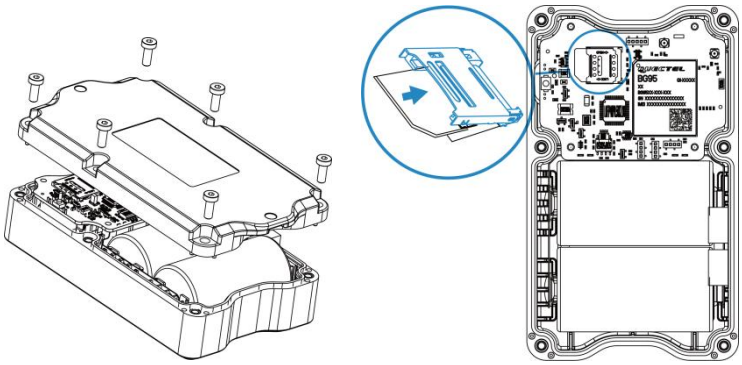

4. Operation Guide

4.1 NFC Configuration

EM400-UDL can be configured via NFC.

1. Download and install “Milesight ToolBox” App from Google Play or App Store.
2. Enable NFC on the smartphone and open “Milesight ToolBox” App.
3. Attach the smartphone with NFC area to the device to read the basic information.

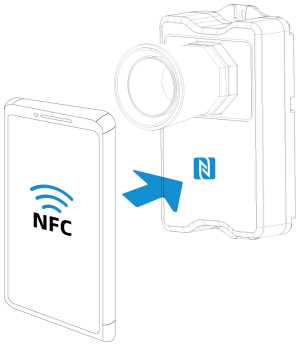

4. Basic information and settings of devices will be shown on ToolBox if it’s recognized successfully. You can switch on/off, read and write the device by tapping the button on the Apps. In order to protect the security of devices, password validation is required when configuring via unused phone. Default password is **123456**.

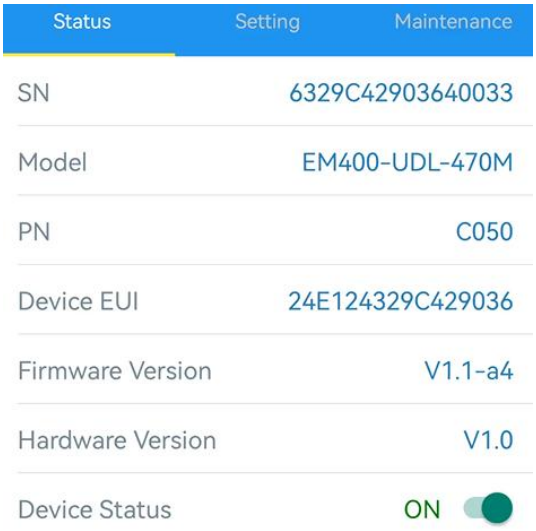

Note:

1) Ensure the location of smartphone NFC area and it's recommended to take off phone case.

2) If the smartphone fails to read/write configurations via NFC, keep the phone away and back to try again.

3) EM400-UDL can also be configured by dedicated NFC reader provided by Milesight IoT.

4.2 Basic Settings

Go to **Device > Setting > General Settings** to change the reporting interval, etc.

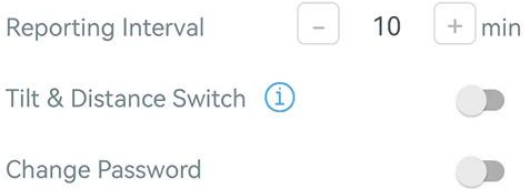

Parameters	Description
Reporting Interval	Reporting interval of transmitting data to server. **LoRaWAN® Version:** 10 minutes as default, range: 1~1080 minutes; **NB Version:** 30 minutes as default, range: 1~1440 minutes.
Tilt & Distance Switch	When detecting that the offset angle is greater than 20 degrees, turn off the distance sensor.
Change Password	Change the password for ToolBox App or software to access this device.
NB Version Only	
Cumulative Numbers	Store this number of periodic packets to report together.

Positioning Settings	Enable GNSS positioning. When the device is on motion status, it will only upload positioning data instead of distance data.
The duration of Motion	When device is detected to move beyond this duration, it will upload a GNSS data packet.
The duration of stationary	When device is detected to stop moving beyond this duration, it will upload a GNSS data packet.
Motion Report Interval/Min	The interval to report GNSS data during the motion.

4.3 Communication Settings

4.3.1 LoRaWAN Settings (LoRaWAN® Version Only)

Go to **Device > Setting > LoRaWAN Settings** of ToolBox App to configure join type, App EUI, App Key and other information. You can also keep all settings by default.

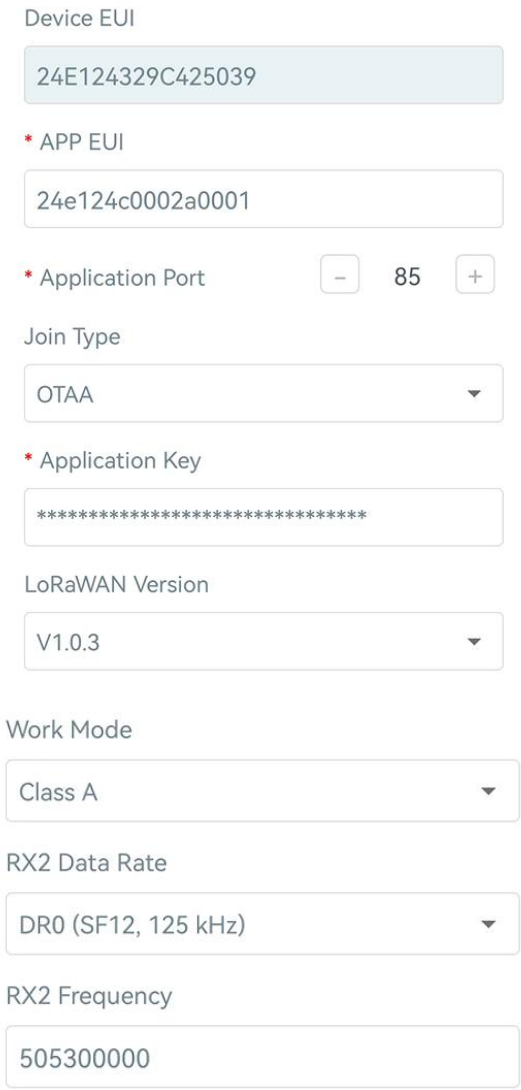

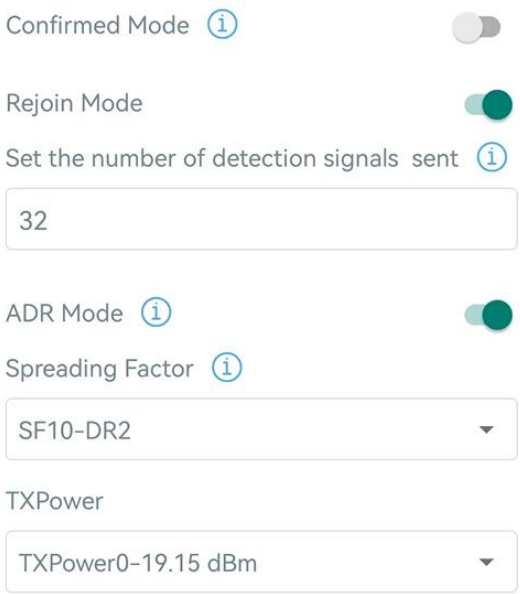

Parameters	Description
Device EUI	Unique ID of the device which can also be found on the label.
App EUI	Default App EUI is 24E124C0002A0001.
Application Port	The port used for sending and receiving data, default port is 85.
Join Type	OTAA and ABP mode are available.
Application Key	Appkey for OTAA mode, default is 5572404C696E6B4C6F52613230313823.
Device Address	DevAddr for ABP mode, default is the 5th to 12th digits of SN.
Network Session Key	Nwkskey for ABP mode, default is 5572404C696E6B4C6F52613230313823.
Application Session Key	Appskey for ABP mode, default is 5572404C696E6B4C6F52613230313823.
LoRaWAN Version	V1.0.2, V1.0.3 are available.
Work Mode	It's fixed as Class A.
RX2 Data Rate	RX2 data rate to receive downlinks.
RX2 Frequency	RX2 frequency to receive downlinks. Unit: Hz
Channel	Enable or disable the frequency to send uplinks.

	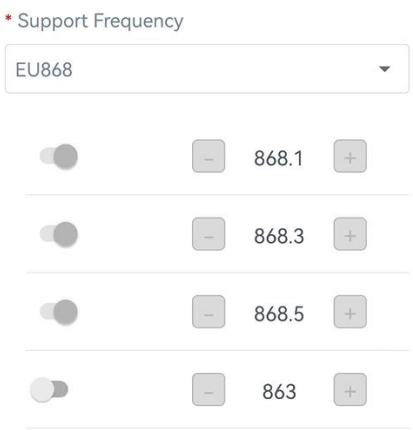 If frequency is one of CN470/AU915/US915, enter the index of the channel that you want to enable and make them separated by commas. **Examples:** 1, 40: Enabling Channel 1and Channel 40 1-40: Enabling Channel 1 to Channel 40 1-40, 60: Enabling Channel 1 to Channel 40 and Channel 60 All: Enabling all channels Null: Indicates that all channels are disabled 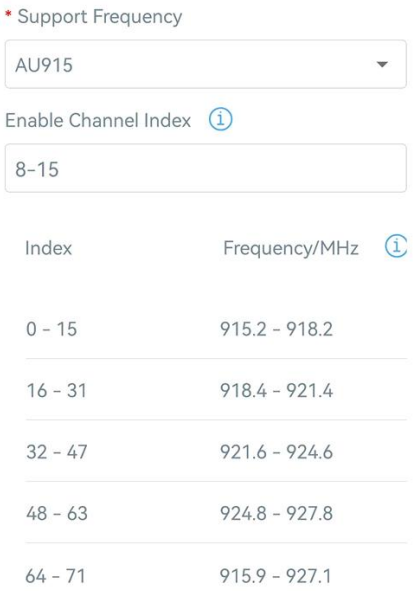
Spread Factor	If ADR is disabled, the device will send data via this spread factor.
Confirmed Mode	If the device does not receive ACK packet from network server, it will resend data once.
Rejoin Mode	Reporting interval ≤ 35 mins: the device will send a specific number of LinkCheckReq MAC packets to the network server every reporting interval or 2*reporting interval to validate connectivity; If there is no response, the device will re-join the network. Reporting interval > 35 mins: the device will send a specific number of

	LinkCheckReq MAC packets to the network server every reporting interval to validate connectivity; If there is no response, the device will re-join the network.
Set the number of packets sent	When rejoin mode is enabled, set the number of LinkCheckReq packets sent. Note: the actual sending number is **Set the number of packets sent** + 1.
ADR Mode	Allow network server to adjust datarate of the device.
Tx Power	Transmit power of device.

Note:

1) Please contact sales for device EUI list if there are many units.
2) Please contact sales if you need random App keys before purchase.
3) Select OTAA mode if you use Milesight IoT cloud to manage devices.
4) Only OTAA mode supports rejoin mode.

4.3.2 Application Mode Settings (NB Version Only)

Go to **Device > Setting > Application Mode Settings** of ToolBox App to configure the application mode and server information.

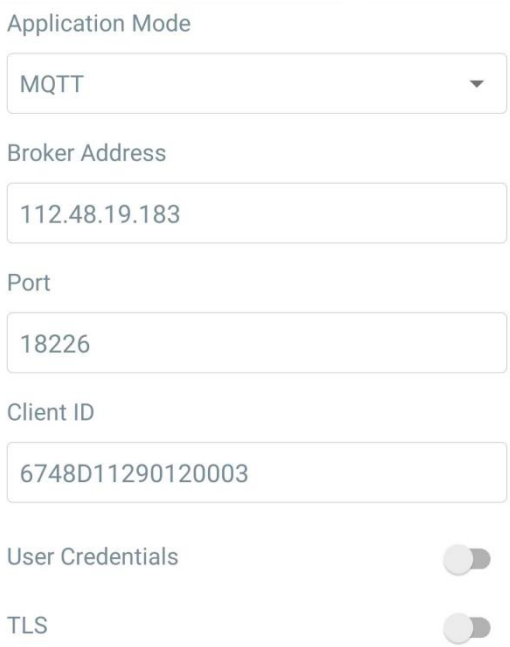

Parameters	Description
Application Mode	Select from Milesight IoT Cloud, AWS, TCP, UDP, and MQTT.
AWS	
Server Address	Fill in the AWS server domain name which the data sends to.
CA File	Import the CA.crt file.
Client Certificate	Import the client certificate.

Client Key	Import the client key.
TCP/UDP	
Server Address	Fill in the TCP/UDP server address (IP/domain name).
Server Port	Fill in the TCP/UDP server port. Range: 1-65535.
MQTT	
Broker Address	Fill in MQTT broker address to receive data.
Port	Fill in MQTT broker port to receive data.
Client ID	Client ID is the unique identity of the client to the server, it must be unique when all clients are connected to the same server.
User Credentials	
Enable	Enable user credentials.
Username	The username used for connecting to MQTT broker.
Password	The password used for connecting to MQTT broker.
TLS	
Enable	Enable the TLS encryption in MQTT communication.
Protocol	It's fixed as TLS v1.2.
CA File	Import the CA.crt file.
Client Certificate	Import the client certificate.
Client Key	Import the client key.

4.4 Advanced Settings

4.4.1 Calibration Settings

Go to **Device > Settings > Calibration Settings** to enable calibration. EM400-UDL supports two calibration types.

- **Numerical Calibration**: users can define calibration value to correct every distance.

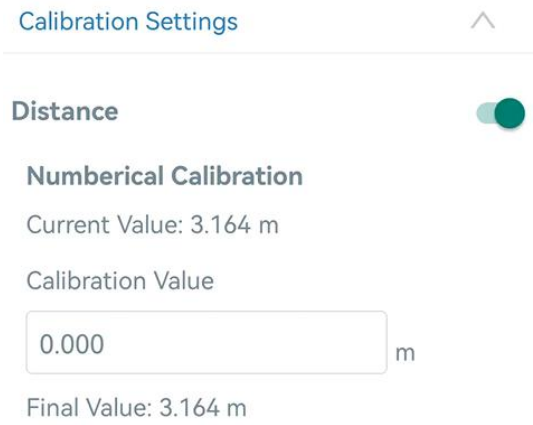

- **Measure Outlier Calibration**: users can define either outlier range or value. When the device distance value exceeds the outlier range (or range) comparing to last value, the device will measure the distance again.

4.4.2 Threshold Settings

Go to **Device > Setting > Threshold Settings** to enable the threshold settings and input the distance threshold. EM400-UDL will detect whether the distance reaches the threshold according to collecting interval. If threshold is triggered, it uploads the current data once instantly.

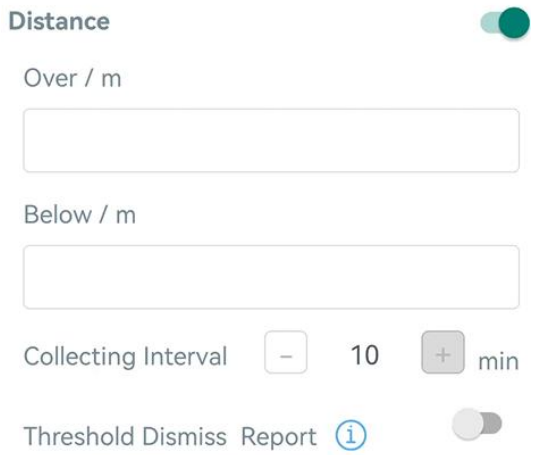

Parameters	Description
Collecting Interval	Collecting interval of ultrasonic sensor to detect distance. Range: 1~1080min
Threshold Dismiss Report	When the collected value changes from outside the threshold to within the threshold, a threshold release packet will be reported.

4.5 Maintenance

4.5.1 Upgrade

1. Download firmware from Milesight website to your smartphone.

2. Open Toolbox App, go to **Device > Maintenance** and click **Browse** to import firmware and upgrade the device.

Note:

1) Operation on ToolBox is not supported during a firmware upgrade.

2) Only Android version ToolBox supports the upgrade feature.

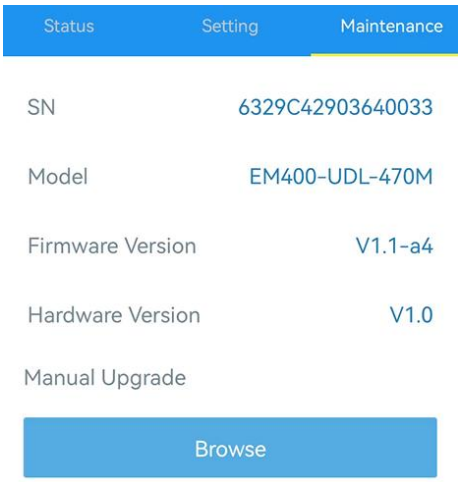

4.5.2 Backup

EM400-UDL support configuration backup for easy and quick device configuration in bulk. Backup is allowed only for devices with the same model and frequency band.

1. Go to **Template** page on the App and save current settings as a template. You can also edit the template file.

2. Select one template file which saved in the smartphone and click **Write**, then attach to another device to write configuration.

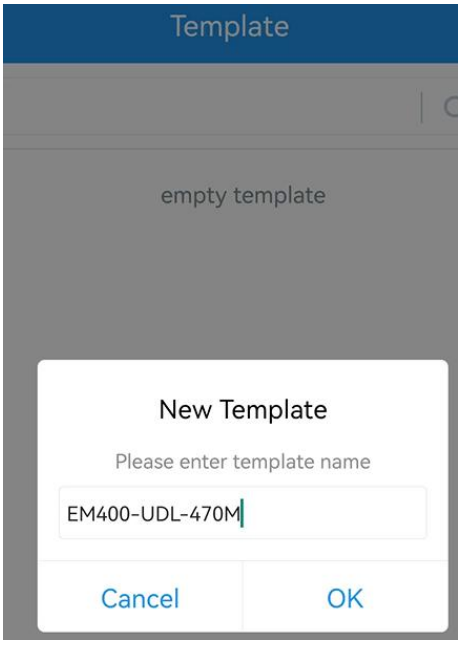

Note: Slide the template item left to edit or delete the template. Click the template to edit the configurations.

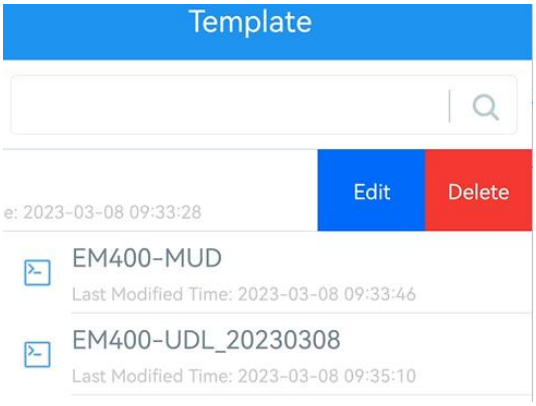

4.5.3 Reset to Factory Default

Please select one of following methods to reset device:

Via Hardware: Hold on power button (internal) for more than 10s.

Via ToolBox App: Go to **Device > Maintenance** to click **Reset**, then attach smartphone with NFC area to device to complete reset.

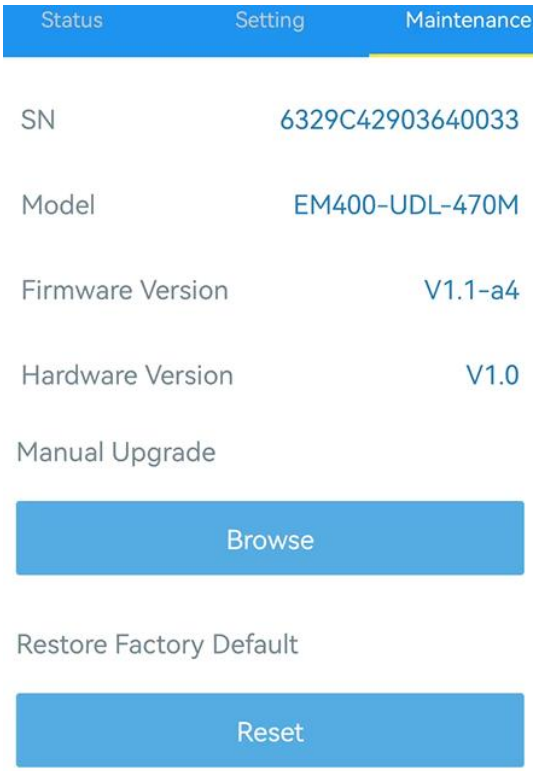

5. Installation

1. Drill two holes on the container cover according to the location of device mounting holes.
2. Put the device under container cover and align the holes in order to perfectly screw the bolts into the holes from the other side of the cover.

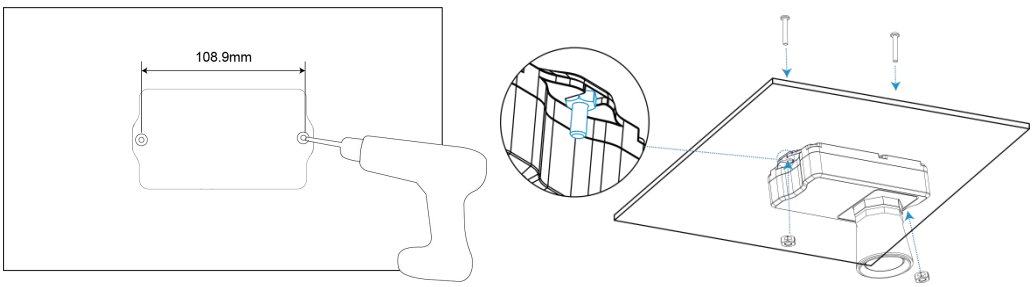

Besides, the device can also be fixed by two M4 mounting screws and wall plugs.

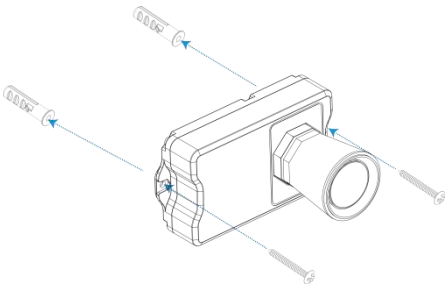

Installation Note:

- In order to provide the best data transmission, please ensure the device is deployed within the signal range of the LoRaWAN® gateway or base station and keep it away from metal objects and obstacles.
- The device must be placed in a horizontal position above the detected object so that it has a clear path to the object.
- The device should be installed at least 30cm away from the side-wall without obstructions blocking the ultrasonic signal If the device needs to be installed on the side wall, please ensure the ultrasonic horn is away from the side wall.
- Do not install the ultrasonic sensor above the influent stream to ensure the measured surface rather than the incoming stream.

6. Communication Protocol

For decoder examples please find files on https://github.com/Milesight-IoT/SensorDecoders.

6.1 LoRaWAN® Version

All data are based on following format (HEX):

Channel1	Type1	Data1	Channel2	Type2	Data2	Channel 3	...
1 Byte	1 Byte	N Bytes	1 Byte	1 Byte	M Bytes	1 Byte	...

6.1.1 Uplink Data

Channel	Type	Description
ff	01(Protocol Version)	01=>V1
	09 (Hardware Version)	01 40 => V1.4
	0a (Software Version)	01 14 => V1.14
	0b (Power On)	Device is on
	0f (Device Type)	00: Class A, 01: Class B, 02: Class C
	16 (Device SN)	16 digits
01	75(Battery Level)	UINT8, Unit: %
03	67 (Temperature)	INT16, Unit: °C
04	82 (Distance)	INT16, Unit: mm
05	00 (Device Position)	00: Normal (horizontal offset angle < 20°) 01: Tilt (horizontal offset angle ≥ 20°)
83	67(Temperature)	Temperature (2 Bytes) + Alarm Status(1 Byte) Temperature: unit -- °C Alarm Status:

		00 -Alarm dismiss 01 -Alarm
84	82(Distance)	Distance (2 Bytes) + Alarm Status (1 Byte) Distance: unit -- mm Alarm Status: 00 -Alarm dismiss 01 -Alarm

Examples:

1. Device information: report once whenever join the network.

ff0bff ff0101 ff166329c42903640033 ff090100 ff0a0101 ff0f00					
Channel	**Type**	**Value**	**Channel**	**Type**	**Value**
ff	0b (Power On)	ff (Reserved)	ff	01 (Protocol Version)	01 (V1)
Channel	**Type**	**Value**	**Channel**	**Type**	**Value**
ff	16 (Device SN)	6329c42903 640033	ff	09 (Hardware version)	0100 (V1.0)
Channel	**Type**	**Value**	**Channel**	**Type**	**Value**
ff	0a (Software version)	0101 (V1.1)	ff	0f (Device Type)	00 (Class A)

2. Periodic uplink: report according to reporting interval (10 mins by default).

017564 0367f800 04820101 050001					
Channel	**Type**	**Value**	**Channel**	**Type**	**Value**
01	75 (Battery)	64 => 100%	03	67 (Temperature)	f8 00 => 00 f8 = 248 * 0.1 =24.8 °C
Channel	**Type**	**Value**	**Channel**	**Type**	**Value**
04	82 (Distance)	01 01 => 01 01 =257mm =0.257m	05	00 (Device Position)	01=Tilt

3. Distance Threshold: report when distance reaches the threshold or returns back to normal value.

8482330701		
Channel	**Type**	**Value**
84	82 (Distance)	Distance: 33 07 =>07 33 = 1843mm = 1.843m Alarm Status: 01= Alarm

4. Temperature Threshold: report when the abrupt change of temperature is greater than 5 °C.

8367220101		
Channel	**Type**	**Value**
83	67 (Temperature)	Temperature: 22 01 =>01 22 = 290 * 0.1 = 29°C Alarm Status: 01= Alarm

6.1.2 Downlink Commands

EM400-UDL supports downlink commands to configure the device. Application port is 85 by default.

Channel	Type	Description
ff	10 (Reboot)	ff (Reserved)
	03 (Set Reporting Interval)	2 Bytes, unit: s
	3e (Set Tilt & Distance Switch)	00 = Disable; 01 = Enable
	06 (Set Threshold Alarm)	9 Bytes, CTRL(1B)+Min(2B)+Max(2B)+00000000(4B) CTRL: Bit2~Bit0: 000-disable 001-below 010-above 011-within 100-below or above Bit5~Bit3=001 Bit6=0 Bit7: 0 - disable threshold dismiss report 1 - enable threshold dismiss report

Example:

1. Set reporting interval as 20 minutes.

ff03b004		
Channel	**Type**	**Value**
ff	03 (Set Reporting Interval)	b0 04 => 04 b0 = 1200s = 20 minutes

2. Reboot the device.

ff10ff

Channel	Type	Value
ff	10 (Reboot)	ff (Reserved)

3. Enable "Tilt & Distance Switch" feature.

ff3e01		
Channel	**Type**	**Value**
ff	3e (Set Tilt & Distance Switch)	01 = Enable

4. When the distance is below 1 m or above 3 m, the sensor will trigger threshold alarm.

ff06 8c e803 b80b 0000 0000		
Channel	**Type**	**Value**
ff	06 (Set Threshold Alarm)	CTRL: 8c=10 001 100 100=below or above 10=enable threshold dismiss report Min: e8 03=> 03 e8 =1000mm =1m Max: b80b => 0b b8 =3000mm =3m

6.2 NB Version

6.2.1 AWS/MQTT Topics

When the device is connected to AWS/MQTT server, the bi-directional communication uses different topics.

Topic	Content
em/[SN]/status	Receive periodic reports, threshold alarms, etc.
em/[SN]/cmd/update	Send downlink commands
em/[SN]/cmd/update/accepted	Receive success ACK of downlink commands **Note:** users need to send downlink command to enable ACK feature first.

6.2.2 Uplink Data

All data are based on following format (HEX):

Start	ID	Packet Length	FLAG	Frame Counter	Protocol Version	Software Version	Hardware Version
02	0001	2 Bytes	00	0000	01	4 Bytes	4 Bytes
SN	**IMEI**	**IMSI**	**ICCID**	**Signal**	**Data Length**	**Data1**	...
16 Bytes	15 Bytes	15 Bytes	20 Bytes	1 Byte	2 Bytes	N Bytes	...

Example:

02 0001 005f 00 0000 01 30313031 30313030 36373438443131323930313230303033 38363835303830363139323435313334363030383338383338303636383638393836303462383130323263303435363638361 0 000E 01750103677D000482FDFF050000	
Type	**Content**
Start	02
ID	0001
Packet Length	00 5f=95 bytes
FLAG	00
Frame Counter	0000
Protocol Version	01=V1
Software Version	30 31 30 31 => 0101=V1.1
Hardware Version	30 31 30 30 => 0100=V1.0
SN	36 37 34 38 44 31 31 32 39 30 31 32 30 30 30 33=>6748d11290120003
IMEI	38 36 38 35 30 38 30 36 31 39 32 34 35 31 33 =>868508061924513
IMSI	34 36 30 30 38 33 38 38 33 38 30 36 36 38 36 => 460083883806686
ICCID	38 39 38 36 30 34 62 38 31 30 32 32 63 30 34 35 36 36 38 36 => 898604b81022c0456686
Network Signal	10=>16 asu
Data Length	0e=>14 Bytes
Data	See details below

Data part is based on Channel+Type+Data, the Data field should follow little-endian:

Channel	Type	Description
01	75(Battery Level)	UINT8, Unit: %
03	67 (Temperature)	INT16, Unit: °C
04	82 (Distance)	INT16, Unit: mm
05	00 (Device Position)	00: Normal (horizontal offset angle < 20°) 01: Tilt (horizontal offset angle ≥ 20°)
06	88 (Location)	Byte 1-4: latitude*1000000 Byte 5-8: longitude*1000000 Byte 9: motion status, 20=unknown, 21=start moving, 22=in motion, 23=stop moving **Note:** If the device fails to get GNSS data, the latitude or longitude will show FFFFFFFF.

83	67(Temperature)	Temperature (2 Bytes) + Alarm Status(1 Byte) Temperature: unit -- °C Alarm Status: 00 -Alarm dismiss 01 -Alarm
84	82(Distance)	Distance (2 Bytes) + Alarm Status (1 Byte) Distance: unit -- mm Alarm Status: 00 -Alarm dismiss 01 -Alarm

Examples:

1. Periodic uplink: report according to reporting interval*cumulative numbers (30 mins*12 by default) when the device is stationary.

017564 0367f800 04820101 050000					
Channel	**Type**	**Value**	**Channel**	**Type**	**Value**
01	75 (Battery)	64 => 100%	03	67 (Temperature)	f8 00 => 00 f8 = 248 * 0.1 =24.8 °C
Channel	**Type**	**Value**	**Channel**	**Type**	**Value**
04	82 (Distance)	01 01 => 01 01 =257mm =0.257m	05	00 (Device Position)	00=Normal

2. GNSS uplink: report when positioning setting is enabled and the device is in motion.

050001 068873c177019cff080722					
Channel	**Type**	**Value**	**Channel**	**Type**	**Value**
05	00 (Device Position)	01=Tilt	06	88(Location)	Latitude: 73c17701=>01 77 c1 73=24625523/1000000=24.625523 Longitude: 9cff0807=>07 08 ff 9c=118030236/1000000=118.030236 22=in motion

3. Distance Threshold: report when distance reaches the threshold or returns back to normal value. If the threshold triggering time is close to periodic report time, it will send with periodic uplink.

8482330701		
Channel	**Type**	**Value**
84	82 (Distance)	Distance: 33 07 =>07 33 = 1843mm = 1.843m 01= Alarm

4. Temperature Threshold: report once when the abrupt change of temperature is greater than 5 °C.

8367220101 0688FFFFFFFFFFFFFFFF20					
Channel	**Type**	**Value**	**Channel**	**Type**	**Value**
83	67 (Temperature)	Temperature: 22 01 =>01 22 = 290 * 0.1 = 29 °C 01= Alarm	06	88(Location)	Latitude/longitude : FFFFFFFF 20=unknown

6.2.3 Downlink Commands

EM400-UDL supports downlink commands to configure the device. Note that it can only receive downlink commands within the 10s after sending uplink packets.

Channel	Type	Description
ff	10 (Reboot)	ff (Reserved)
	03 (Reporting Interval)	4 Bytes, unit: s
	3e (Tilt & Distance Switch)	00 = Disable; 01 = Enable
	a0 (Position Setting)	00 = Disable; 01 = Enable
	58 (Duration of Motion and Stationary)	5 Bytes, Byte 1: duration of motion, unit: s Byte 2-5: duration of stationary, unit: s
	8e (Motion Report Interval)	5 Bytes, Byte 1: 00 = Disable; 01 = Enable Byte 2-5: report interval, unit: s
	9e (Cumulative Numbers)	2 Bytes, Byte 1: 00 = Disable; 01 = Enable Byte 2: Cumulative numbers
	9f (ACK of Downlink Command)	00 = Disable; 01 = Enable
	06 (Set Threshold Alarm)	9 Bytes, CTRL(1B)+Min(2B)+Max(2B)+00000000 (4 B) CTRL:

		Bit2~Bit0: 000-disable 001-below 010-above 011-within 100-below or above Bit5~Bit3: 001-Standard Mode 010-Bin Mode Bit6=0 Bit7: 0 - disable threshold dismiss report 1 - enable threshold dismiss report

Example:

1. Set reporting interval as 20 minutes.

ff03b0040000		
Channel	**Type**	**Value**
ff	03 (Set Reporting Interval)	b0 04 00 00 => 00 00 04 b0 = 1200s = 20 minutes

2. Reboot the device.

ff10ff		
Channel	**Type**	**Value**
ff	10 (Reboot)	ff (Reserved)

3. When the distance is below 1 m or above 3 m, the sensor will trigger threshold alarm.

ff06 8c e803 b80b 0000 0000		
Channel	**Type**	**Value**
ff	06 (Set Threshold Alarm)	CTRL: 8c=10 001 100 100=below or above 10=enable threshold dismiss report Min: e8 03=> 03 e8 =1000mm =1m Max: b80b => 0b b8 =3000mm =3m

4. Set duration of motion to 50s and duration of stationary to 180s.

ff5832b4000000		
Channel	**Type**	**Value**
ff	58(Duration of Motion and	Duration of motion: 32=50s

	Stationary)	Duration of stationary: b4 00 00 00=00 00 00 b4=180s

-END-