EUROFINS ELECTRICAL TESTING SERVICE (SHENZHEN) CO., LTD.

RADIO TEST - REPORT

Japan Compliance Test Report

Test Report Number: EFGX26060331-IE-02-E01

Content

1	**General Information**	**3**
1.1	Notes	3
1.2	Testing laboratory	4
1.3	Details of approval holder	4
1.4	Details of Manufacturer	4
1.5	Application details	5
1.6	Test item	5
1.7	Standards	6
2	**Technical test**	**7**
2.1	Summary of test results	7
2.2	Test environment	7
2.3	Measurement uncertainty	7
2.4	Test mode	7
2.5	Test equipment utilized	8
2.6	Auxiliary Equipment Used during Test:	8
2.7	Test software information:	8
2.8	Customized Configurations	8
2.9	Test Environments	8
2.10	Test results	9
3	**Technical Requirement**	**10**
3.1	Antenna Power and E.I.R.P	10
3.2	Tolerances for Antenna Power	12
3.3	Frequency Tolerance	14
3.4	Dwell Time	16
3.5	Occupied Frequency Bandwidth	18
3.6	Spread Bandwidth and Process Gain	20
3.7	Transmitter Spurious Emissions (Conducted) (For transmitter)	22
3.8	Secondary Radiated Emissions (Conducted) (For receiver)	24
3.9	Interference prevention function	26

1 General Information

1.1 Notes

The results of this test report relate exclusively to the item tested as specified in chapter “Description of test item” and are not transferable to any other test items.

Eurofins Electrical Testing Service (Shenzhen) Co., Ltd. is not responsible for any generalisations and conclusions drawn from this report. Any modification of the test item can lead to invalidity of test results and this test report may therefore be not applicable to the modified test item.

The test report may only be reproduced or published in full. Reproducing or publishing extracts of the report requires the prior written approval of the Eurofins Electrical Testing Service (Shenzhen) Co., Ltd.

This document is subject to the General Terms and Conditions and the Testing and Certification System of Eurofins Electrical Testing Service (Shenzhen) Co., Ltd., available on request or accessible at www.eurofins.com.

Operator:

2026-08-05		Bruce Zheng / Project Engineer	Bruce Zheng
Date	Eurofins-Lab.	Name / Title	Signature

Technical responsibility for area of testing:

2026-08-05		Albert Xu / Lab Manager	Albert Xu
Date	Eurofins-Lab.	Name / Title	Signature

1.2 Testing laboratory

Eurofins Electrical Testing Service (Shenzhen) Co., Ltd.
Room 20 of 2/F., 1/F., Building 2, Spring Block & Room 102, Building 8, Autumn Block,
Meishenghuigu Innovation Park, No.83, Dabao Road, Bao'an District, Shenzhen, Guangdong, China
Telephone : +86-755-82911867
Fax : +86-755-82910749
The Laboratory has passed the Accreditation by the American Association for Laboratory Accrediation (A2LA). The Accreditation number is 5376.01.
The Laboratory has been listed by industry Canada to perform electromagnetic emission measurements, The CAB identifier is CN0088.

1.3 Details of approval holder

Name	:	LITHON CO.,LTD.
Address	:	2-1-33 MIKURIYAMINAMI, HIGASHIOSAKA, OSAKA, JAPAN
Telephone	:	N/A
Fax	:	N/A

1.4 Details of Manufacturer

Name	:	DongGuan XingYue Electronic Co.,LTD.
Address	:	No.98, Industrial Zone of TianE Road, Liwu Village, Qiao Tou Town, Dong Guan City, Guang Dong Province, P.R. China
Telephone	:	N/A
Fax	:	N/A

1.5 Application details

Date of receipt of application	:	2026-06-10
Date of receipt of test item	:	2026-06-10
Date of test	:	2026-06-10 to 2026-08-05
Date of issue	:	2026-08-05

1.6 Test item

Product type	:	Bluetooth speaker
Model name	:	LITHON SP-090, NKM-SPCL01
Brand	:	N/A
Serial number	:	N/A
Sample ID	:	260610-14-002
Ratings	:	DC 3.7V
Test voltage	:	DC 3.7V
Additional information	:	./.

RadioTechnical data

Operating Frequency	:	Bluetooth BR+EDR:2402 MHz- 2480 MHz
Radio Tech.	:	Classic Bluetooth
Frequency channel	:	79Ch
Modulation	:	GFSK, π/4DQPSK, 8DPSK
Antenna type	:	Internal antenna
Antenna gain	:	1.70dBi

The above sample(s) and sample information was/were submitted and identified on behalf of the applicant.
Eurofins assures objectivity and impartiality of the test, and fulfills the obligation of confidentiality for applicant's commercial information and technical documents.

複製禁止

1.7 Standards

Standards	
Article 2 paragraph 1 item (19)	Low power data communications system in the 2.4GHz band
ARIB STD-T66 V3.7, 2014-10	SECOND GENERATION LOW POWER DATA COMMUNICATION SYSTEM/ WIRELESS LAN SYSTEM

2 Technical test

2.1 Summary of test results

No deviations from the technical specification(s) were ascertained in the course of the tests performed. ☒

Or

The deviations as specified were ascertained in the course of the tests performed. ☐

2.2 Test environment

Temperature	: 20	…	25°C
Relative humidity content	: 30	…	60%
Air pressure	: 100	…	101kPa

2.3 Measurement uncertainty

The uncertainty is calculated using the methods suggested in the “Guide to the Expression of Uncertainty in Measurement” (GUM) published by ISO.

System Measurement Uncertainty	
Test Items	Extended Uncertainty
Uncertainty for Conducted RF test	RF Power Conducted: 1.16Db Frequency test involved: 1.05×10-7 or 1%

2.4 Test mode

The EUT was set at continuously transmitting (CH0, CH39, CH78, Hopping) and receiving mode (CH0, CH39, CH78) during the test.

EUT test voltage requirement:
The RF unit is supplied by DC power. The fluctuation of input voltage to the circuit of RF unit of test equipment is under ±1%, when input voltage from DC 3.7V to the test equipment is fluctuated by ±10%, So, the DC 3.7V is choosed in the test report.

The measurement result of the voltage fluctuation at RF circuit when DC 3.7V +/- 10%.

DC Input	DC 3V
3.33V	3V
3.7V	3V
4.07V	3V

2.5 Test equipment utilized

EQUIPMENT ID	EQUIPMENT NAME	MODEL NO.	SN NO.	CAL. DUE DATE
23-2-13-12	Signal Analyzer	N9010B-544	MY57471523	2027-03-20
23-2-10-43	Switch and Control Unit	ERIT-E-JS0806-2	./.	2027-03-20
23-2-10-44	DC power supply	E3642A	MY58386620	2027-03-20
23-2-10-50	Temperature & Humidity Meter	COS-03	582951	2027-03-20

All calibration reports are from CCIC (Shenzhen) Metrology & Testing Service Co.,Ltd.

2.6 Auxiliary Equipment Used during Test:

DESCRIPTION	MANUFACTURER	MODEL NO.	S/N
Laptop	LENOVO	TP00096A	PF-1QH0LV

2.7 Test software information:

Test Software Version	FCC assist		
Modulation	Setting TX Power	TX Pattern	Packet Type
GFSK	10	Pn9	DH5
π/4DQPSK	10	Pn9	2DH5
8 DPSK	10	Pn9	3DH5

2.8 Customized Configurations

EUT Conf.	Signal Description	Operating Frequency	Duty Cycle
DH5	GFSK	CH0: 2402 CH39: 2441 CH78: 2480	77.60
2DH5	π/4DQPSK	CH0: 2402 CH39: 2441 CH78: 2480	77.60
3DH5	8 DPSK	CH0: 2402 CH39: 2441 CH78: 2480	77.60

\

2.9 Test Environments

Enviroment Parameter	Temperature	Voltage	Relative Humidity
101.5Kpa	25.2℃	3.7Vdc	56.3%

2.10 Test results

☒ 1st test ☐ test after modification ☐ production test

Conformance requirement according to Article 2 paragraph 1 item (19) and ARIB STD-T66 Version 3.7/2014-10		Result	Test site
Essential parameter	**Corresponding technical requirements**		
Transmitter requirements	**3.2 (2) Antenna Power**	**PASS**	**Site 1**
	3.2 (3) Tolerances for Antenna Power	**PASS**	**Site 1**
	3.2 (4) Frequency Tolerance	**PASS**	**Site 1**
	3.2 (5) Transmission Rate	**Note 2**	**N/A**
	3.2 (7) Occupied Frequency Bandwidth	**PASS**	**Site 1**
	3.2 (8) Spread Bandwidth	**PASS**	**Site 1**
	3.2 (9) Process Gain	**PASS**	**Site 1**
	3.2 (10) Number of Carriers	**Note 3**	**N/A**
	3.2 (11) Dwell Time	**PASS**	**Site 1**
	3.2 (6) Spurious Emissions	**PASS**	**Site 1**
Receiver requirements	**3.5 (1) Secondary Radiated Emissions**	**PASS**	**Site 1**
Controlling equipment	**3.4.1 (1) Interference prevention function**	**PASS**	**Site 1**
	3.4.2 Channel connection procedure	**Note 4**	**N/A**

Note 1: Measurement taken is within the measurement uncertainty of measurement system.
Note 2: Not Applicable, No signal transmission rate is regulated.
Note 3: Not Applicable, the test item only applicable to device with OFDM system.
Note 4: Not Applicable, Not particularly regulated.
Note 5: Test method: MIC Notice No.88 Appendix No.43

複製禁止

3 Technical Requirement

3.1 Antenna Power and E.I.R.P

3.1.1 Test Method

1. Connect EUT test port to RMS power sensor.
2. Set the EUT to transmit maximum output power at 2.4GHz.
3. Then set the EUT to transmit DH5, 2DH5,3DH5 Hopping mode and measure the conducted output power separately.
4. Repeat above procedures until all frequencies measured were complete.

3.1.2 Test Setup:

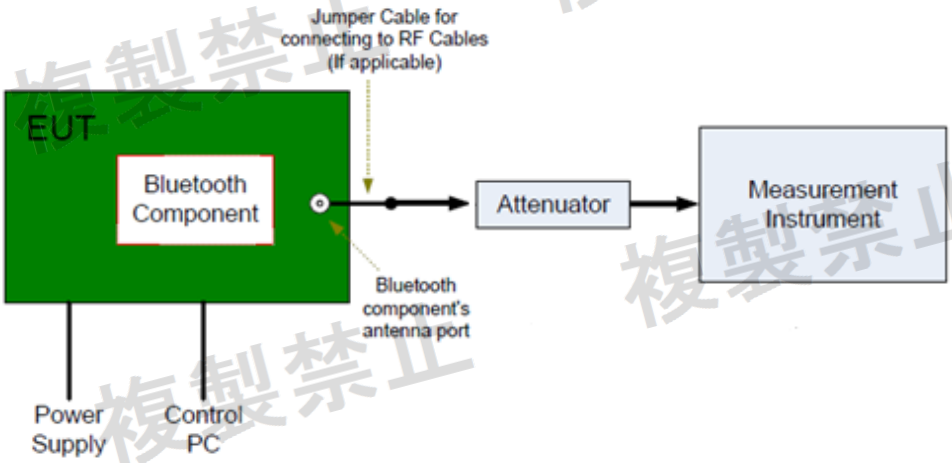

3.1.3 Limit (ARIB STD-T66, Clause 3.2 (2)-a)

a. The antenna power of a transmitting equipment (with a frequency band of 2,427 – 2,470.75 MHz, for spread spectrum systems using FH systems, hybrid systems of DS and FH, or hybrid systems of FH and OFDM) shall be such that the mean power within a bandwidth of 1 MHz is 3 mW or less in the case of modulation using a standard coding test signal with the same transmission rate as that of the modulation signal.

b. The antenna power of a transmitting equipment using a spread spectrum system other than any of those in “a” and the OFDM system shall be such that the mean power within a bandwidth of 1 MHz is 10 mW or less in the case of modulation using a standard coding test signal with the same transmission rate as that of the modulation signal.

3.1.4 Test result

Antenna Power										
Test Condition	TestMode	Antenna	Freq (MHz)	Result (dBm)	Result (mW)	Burst ratio	90% BW (MHz)	Result (mW /MHz)	Limit (mW /MHz)	Ver-dict
NTNV	DH5	Ant1	Hop	-1.11	0.7745	0.776	71.518	0.014	≤3	PASS
	2DH5	Ant1	Hop	-2.60	0.5495	0.776	71.538	0.009	≤3	PASS
	3DH5	Ant1	Hop	-2.61	0.5483	0.776	71.686	0.009	≤3	PASS

EIRP							
Test Condition	TestMode	Antenna	Freq (MHz)	Power (dBm/MHz)	EIRP (dBm/MHz)	Limit (dBm/MHz)	Ver-dict
NTNV	DH5	Ant1	Hop	-18.538	-16.838	≤6.91	PASS
	2DH5	Ant1	Hop	-20.969	-19.269	≤6.91	PASS
	3DH5	Ant1	Hop	-20.969	-19.269	≤6.91	PASS

Remark:Antenna Power=Average burst power (Mw) / burst ratio / spreading bandwidth
EIRP(dBm/MHz)=Antenna power(dBm/MHz)+gain(dBi)

複製禁止

3.2 Tolerances for Antenna Power

3.2.1 Test Method

1. Connect EUT test port to RMS power sensor.
2. Set the EUT to transmit maximum output power at 2.4GHz.
3. Then set the EUT to transmit DH5, 2DH5, 3DH5 Hopping mode and measure the conducted output power separately.
4. Repeat above procedures until all frequencies measured were complete.

3.2.2 Test Setup:

The Bluetooth component's antenna ports(s) of the EUT are connected to the measurement instrument per an appropriate attenuator. The EUT is controlled by PC/software to emit the specified signals for the purpose of measurements.

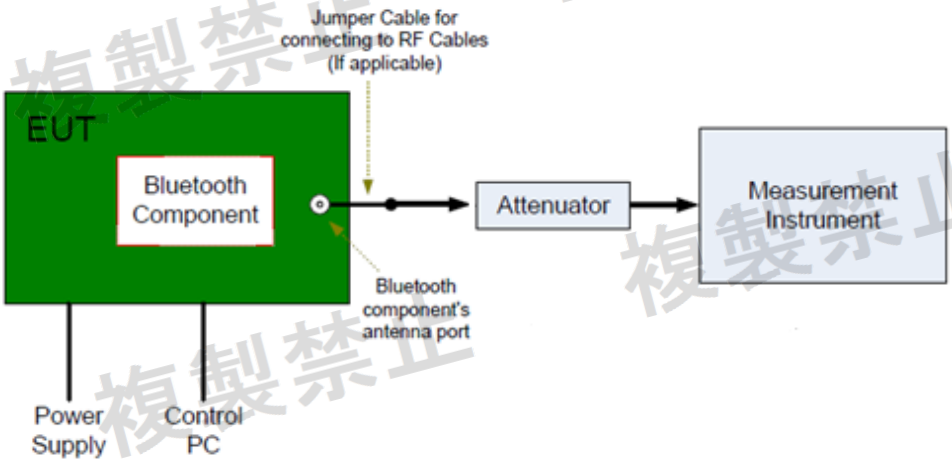

3.2.3 Limit (ARIB STD-T66, Clause 3.2 (3)

Upper limits of the tolerance for antenna power shall be 20%, respectively. Note that they represent the tolerance for the maximum rated antenna power and that no upper and lower limits of the tolerance are regulated in the case of antenna power reduction for communications reasons.

3.2.4 Test result

Modulation type	Output Power (Mw/MHz)	Declared Output Power (Mw/MHz)	Tolerances (%)	Limit
GFSK	0.014	0.03	-53.33	+20%
π/4DQPSK	0.009	0.03	-70.00	+20%
8 DPSK	0.009	0.03	-70.00	+20%

Note: Deviation = (Output power – Declared Output Power) / Declared Output Power * 100%

3.2.5 Result

The equipment met the requirement of this clause.

複製禁止

3.3 Frequency Tolerance

3.3.1 Test Method:

1. Connect EUT test port to spectrum analyzer.
2. Set the EUT to transmit maximum output power at 2.4GHz.
3. Then set the EUT to transmit at Highest, Middle, and Lowest frequency and measure the conducted output power separately.
4. RBW=10KHz, VBW=10KHz, Sweep = auto, Detector function = peak, Trace = max hold
5. Repeat above procedures until all frequencies measured were complete.

3.3.2 Test Setup:

The Bluetooth component's antenna ports(s) of the EUT are connected to the measurement instrument per an appropriate attenuator. The EUT is controlled by PC/software to emit the specified signals for the purpose of measurements.

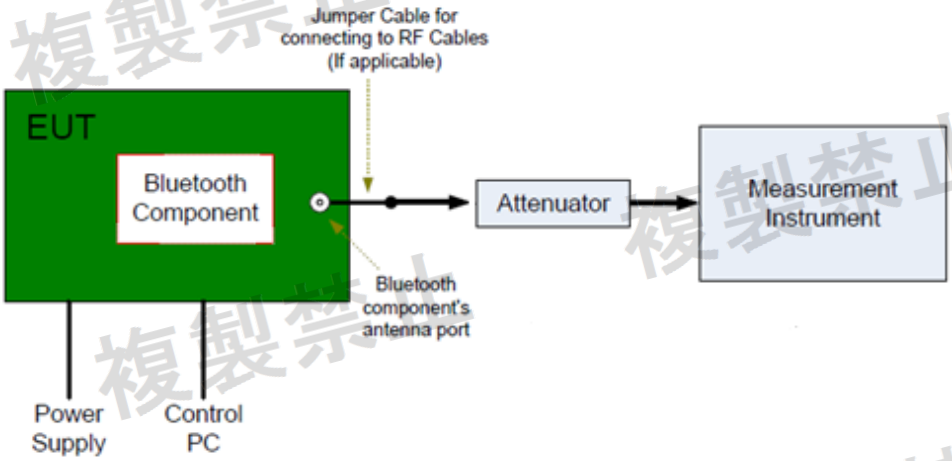

3.3.3 Limit (ARIB STD-T66, Clause 3.2 (4))

Tolerance of frequency: $\pm 50 \times 10^{-6}$.

3.3.4 Test Result

Test Condition	Antenna	Freq(MHz)	Measurement Frequency(MHz)	Result[ppm]	Limit[ppm]	Verdict
NTNV	Ant1	2402	2401.925	-31.22398	±50	PASS
		2441	2440.913	-35.64113	±50	PASS
		2480	2479.925	-30.24194	±50	PASS

Note: Frequency Tolerance (ppm) = [Measurement Frequency – Center Frequency] / Center Frequency*10^6

Test Result: Pass
Please refer to the appendix A for test plotsThe equipment met the requirement of this clause.

複製禁止

3.4 Dwell Time

3.4.1 Test Method:

1. Connect EUT test port to spectrum analyzer.
2. Set the EUT to transmit maximum output power at 2.4GHz.
3. Then set the EUT to transmit at DH5, 2DH5 with hopping mode separately.
4. Set RBW=1MHz , VBW ≥ RBW.
5. Set Sweep = Single.
6. Repeat above procedures until all frequencies measured were complete.

3.4.2 Test Setup:

The Bluetooth component's antenna ports(s) of the EUT are connected to the measurement instrument per an appropriate attenuator. The EUT is controlled by PC/software to emit the specified signals for the purpose of measurements.

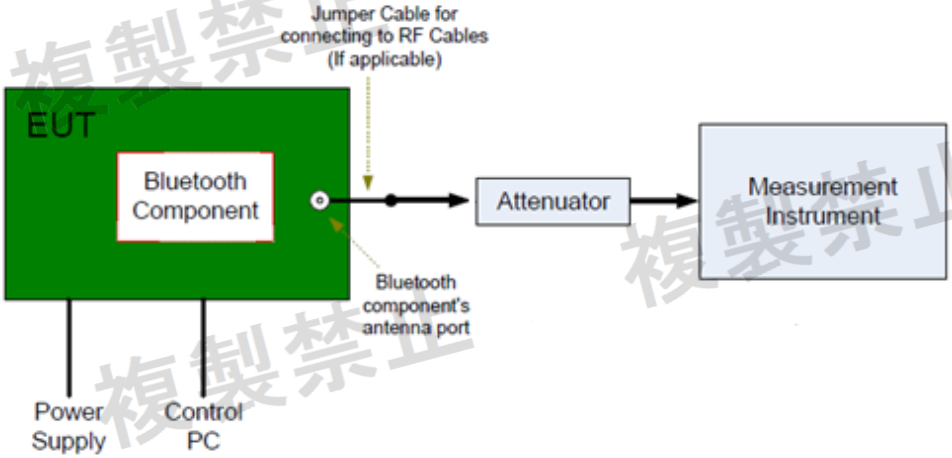

3.4.3 Limit (ARIB STD-T66, Clause 3.2 (11))

Frequency dwell time (time during which radio waves continue to be emitted at a specified frequency) of a transmitting equipment using the FH system shall be 0.4 seconds or less.

3.4.4 Test Result

The Dwell Time = Burst Width * Total Hops. The detailed calculations are showed as follows:
The observation time for dwell time calculation: 0.4 [s] * hopping number = 0.4 [s] * 79 = 31.6 [s];
The burst width, which is directly measured, refers to the duration on one channel hop.
The maximum number of hopping channels in 31.6s for
DH5=1600 / 6 / 79 *31.6=106.67
Test Result (Packet DH5, 2DH5 the worse result was reported to show compliance):

Type	Packet	Pulse Time (ms)	Number of chips	Accumulated Dwell time (ms)	Limit (ms)
GFSK	DH5	2.88	106.67	307.2096	400
π/4DQPSK	2DH5	2.89	106.67	308.2763	400
8 DPSK	3DH5	2.89	106.67	308.2763	400

Test Result: Pass

Please refer to the appendix G for test plots
The equipment met the requirement of this clause.

3.5 Occupied Frequency Bandwidth

3.5.1 Test Method:

7. Connect EUT test port to spectrum analyzer.
8. Set the EUT to transmit maximum output power at 2.4GHz.
9. Then set the EUT to transmit at Highest, Middle, and Lowest frequency separately.
10. Set Ocuppied bandwidth 99%
11. Set RBW=1MHz , VBW ≥ RBW.
12. Set Sweep = auto.
13. Set Detector function = peak.
14. Allow the trace to stabilize.
15. Repeat above procedures until all frequencies measured were complete.

3.5.2 Test Setup:

The Bluetooth component's antenna ports(s) of the EUT are connected to the measurement instrument per an appropriate attenuator. The EUT is controlled by PC/software to emit the specified signals for the purpose of measurements.

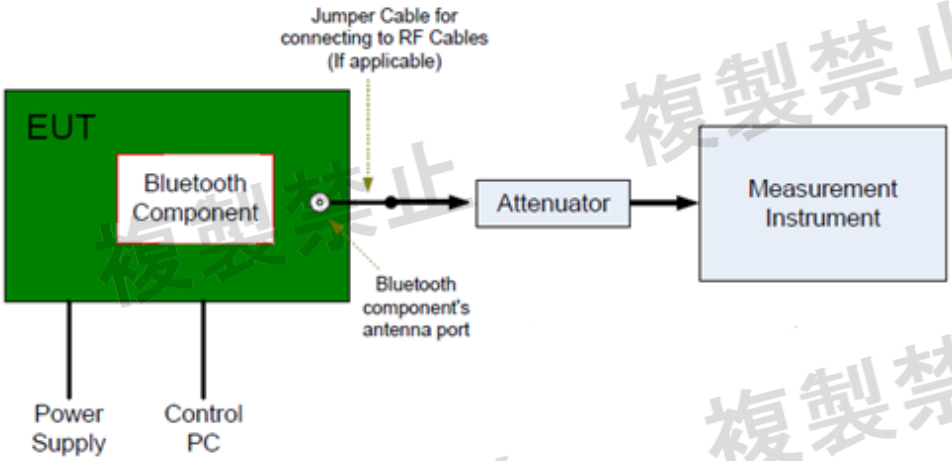

3.5.3 Limit (ARIB STD-T66, Clause 3.2 (7))

Permissible value for occupied bandwidth using the FH system, a hybrid system combining DS and FH systems, or a hybrid system combining FH and OFDM systems shall be 83.5 MHz or less, while necessary bandwidth (minimum occupied bandwidth sufficient to ensure information transmission of required quality at a required transmission rate for the system used under specified conditions for a given emission type) using a system other than any of the above shall be 26 MHz or less.

3.5.4 Test Result

NTNV

Type	Channel (MHz)	Result (MHz)	Limit (MHz)
GFSK	2402 - 2480	78.807	<83.5MHz
π/4DQPSK	2402 - 2480	78.915	<83.5MHz
8 DPSK	2402 - 2480	78.896	<83.5MHz

Test Result: Pass

Please refer to the appendix C for test plots
The equipment met the requirement of this clause.

複製禁止

3.6 Spread Bandwidth and Process Gain

3.6.1 Test Method:

1. Connect EUT test port to spectrum analyzer.
2. Set the EUT to transmit maximum output power at 2.4GHz.
3. Then set the EUT to transmit at Highest, Middle, and Lowest frequency separately.
4. Set Ocuppied bandwidth 90%
5. Set analyzer center frequency to channel center frequency.
6. Detector = peak.
7. Sweep time = auto couple.
8. Trace mode = max hold.
9. Allow trace to fully stabilize.
10. Repeat above procedures until all frequencies measured were complete.

3.6.2 Test Setup:

The Bluetooth component's antenna ports(s) of the EUT are connected to the measurement instrument per an appropriate attenuator. The EUT is controlled by PC/software to emit the specified signals for the purpose of measurements.

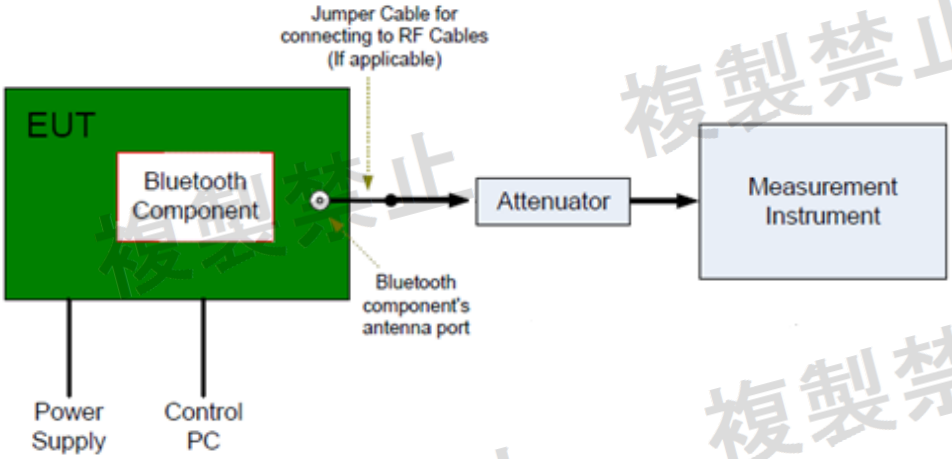

3.6.3 Limit (ARIB STD-T66, Clause 3.2 (8))

In spread spectrum systems, spread bandwidth (which refers to a frequency bandwidth with an upper limit and lower limit such that each of the mean powers radiated above the upper frequency limit and below the lower frequency limit is equal to 5 % of the total mean power radiated; this also applies hereafter) shall be 500 kHz or more

3.6.4 Test Result

Type	Channel (MHz)	Spread Bandwidth (MHz)	Limit (MHz)	Spread Factor	Spread Factor Limit
GFSK	2402 - 2480	71.518	≥0.5	71.518	>5
π/4DQPSK	2402 - 2480	71.538	≥0.5	71.538	>5
8 DPSK	2402 - 2480	71.686	≥0.5	71.686	>5

Note: Spread Factor=Spread Bandwidth/Modulation rate.
The modulation rate: MR=1Mbps (Declared by Manufacturer)

Test Result: Pass

Please refer to the appendix D for test plots
The equipment met the requirement of this clause.

複製禁止

3.7 Transmitter Spurious Emissions (Conducted) (For transmitter)

Test Method:

1. Connect EUT test port to spectrum analyzer.
2. Set the EUT to transmit maximum output power at 2.4GHz.
3. Then set the EUT to transmit at Highest, Middle, and Lowest frequency separately.
4. Set Freqeucny range and limit: 2,387MHz ≤ f ≤ 2,400MHz and 2,483.5MHz < f ≤ 2,496.5MHz 25 μW or less b. 2,387MHz > f and 2,496.5MHz < f 2.5 μW or less
5. Set RBW ≥ 100KHz for testing below 1GHz, 1MHz for testing above 1GHz, VBW ≥ RBW.
6. Set Sweep = auto.
7. Set Detector function = peak.
8. Allow the trace to stabilize.
9. Repeat above procedures until all frequencies measured were complete.

Test Setup:

The Bluetooth component's antenna ports(s) of the EUT are connected to the measurement instrument per an appropriate attenuator. The EUT is controlled by PC/software to emit the specified signals for the purpose of measurements.

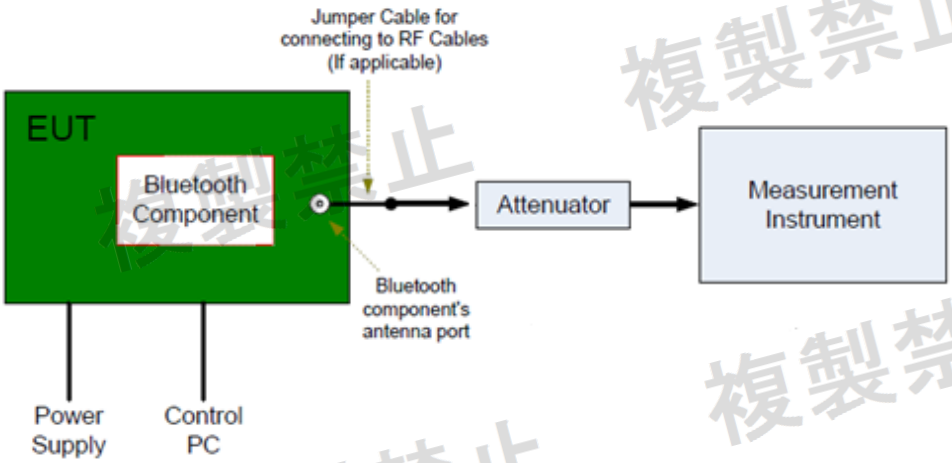

3.7.1 Limit (ARIB STD-T66, Clause 3.2 (6))

Permissible mean power of spurious emission of each frequency supplied to a feeder, that is, mean power of spurious emission in the 1 MHz bandwidth at frequency f other than frequency band used shall be as follows: a. 2,387MHz ≤ f ≤ 2,400MHz and 2,483.5MHz < f ≤ 2,496.5MHz 25 μW or less b. 2,387MHz > f and 2,496.5MHz < f 2.5 μW or less

3.7.2 Test Result

Test Condition	Test Mode	Antenna	Freq(MHz)	Freq.Range [MHz]	Freq. [MHz]	Result [dBm]	Limit [dBm]	Result [μW]	Limit [μW]	Verdict
NTNV	DH5	Ant1	2402	30~1000	288.26	-45.94	≤-26	0.02547	≤2.5	PASS
				1000~2387	2338.80	-42.87	≤-26	0.05164	≤2.5	PASS
				2387~2400	2399.96	-31.33	≤-16	0.73621	≤25	PASS
				2483.5~2496.5	2492.28	-36.53	≤-16	0.22233	≤25	PASS
				2496.5~13000	2528.01	-44.52	≤-26	0.03532	≤2.5	PASS
			2441	30~1000	287.78	-45.98	≤-26	0.02523	≤2.5	PASS
				1000~2387	2376.60	-41.08	≤-26	0.07798	≤2.5	PASS
				2387~2400	2388.82	-36.60	≤-16	0.21878	≤25	PASS
				2483.5~2496.5	2486.52	-36.78	≤-16	0.20989	≤25	PASS
				2496.5~13000	2505.95	-40.74	≤-26	0.08433	≤2.5	PASS
			2480	30~1000	287.78	-46.88	≤-26	0.02051	≤2.5	PASS
				1000~2387	2351.98	-46.00	≤-26	0.02512	≤2.5	PASS
				2387~2400	2392.04	-37.23	≤-16	0.18923	≤25	PASS
				2483.5~2496.5	2492.99	-35.99	≤-16	0.25177	≤25	PASS
				2496.5~13000	2544.82	-41.72	≤-26	0.06730	≤2.5	PASS
	2DH5	Ant1	2402	30~1000	287.78	-47.09	≤-26	0.01954	≤2.5	PASS
				1000~2387	2338.11	-43.29	≤-26	0.04688	≤2.5	PASS
				2387~2400	2400.00	-26.96	≤-16	2.01372	≤25	PASS
				2483.5~2496.5	2485.22	-36.40	≤-16	0.22909	≤25	PASS
				2496.5~13000	3859.33	-42.95	≤-26	0.05070	≤2.5	PASS
			2441	30~1000	287.78	-46.17	≤-26	0.02415	≤2.5	PASS
				1000~2387	2376.94	-42.09	≤-26	0.06180	≤2.5	PASS
				2387~2400	2393.48	-37.15	≤-16	0.19275	≤25	PASS
				2483.5~2496.5	2492.18	-36.46	≤-16	0.22594	≤25	PASS
				2496.5~13000	9757.57	-43.62	≤-26	0.04345	≤2.5	PASS
			2480	30~1000	288.02	-46.54	≤-26	0.02218	≤2.5	PASS
				1000~2387	2383.53	-45.93	≤-26	0.02553	≤2.5	PASS
				2387~2400	2389.81	-36.96	≤-16	0.20137	≤25	PASS
				2483.5~2496.5	2496.42	-36.11	≤-16	0.24491	≤25	PASS
				2496.5~13000	2544.82	-42.12	≤-26	0.06138	≤2.5	PASS
	3DH5	Ant1	2402	30~1000	287.78	-45.72	≤-26	0.02679	≤2.5	PASS
				1000~2387	2337.07	-42.14	≤-26	0.06109	≤2.5	PASS
				2387~2400	2399.99	-27.07	≤-16	1.96336	≤25	PASS
				2483.5~2496.5	2490.60	-36.46	≤-16	0.22594	≤25	PASS
				2496.5~13000	3796.83	-43.91	≤-26	0.04064	≤2.5	PASS
			2441	30~1000	287.78	-46.76	≤-26	0.02109	≤2.5	PASS
				1000~2387	2375.90	-42.15	≤-26	0.06095	≤2.5	PASS
				2387~2400	2393.06	-36.69	≤-16	0.21429	≤25	PASS
				2483.5~2496.5	2495.15	-36.47	≤-16	0.22542	≤25	PASS
				2496.5~13000	9757.57	-43.55	≤-26	0.04416	≤2.5	PASS
			2480	30~1000	288.02	-46.84	≤-26	0.02070	≤2.5	PASS
				1000~2387	2383.88	-46.55	≤-26	0.02213	≤2.5	PASS
				2387~2400	2391.76	-36.70	≤-16	0.21380	≤25	PASS
				2483.5~2496.5	2496.37	-35.45	≤-16	0.28510	≤25	PASS
				2496.5~13000	3827.82	-43.74	≤-26	0.04227	≤2.5	PASS

3.7.3 Result

Please refer to the appendix E for test plots
The equipment met the requirement of this clause.

複製禁止

3.8 Secondary Radiated Emissions (Conducted) (For receiver)

Test Method:
The test method was refered to the subclause 11.13.3.4 of ANSI C63.10-2013.

1. Connect EUT test port to spectrum analyzer.
2. Set the EUT to transmit maximum output power at 2.4GHz.
3. Then set the EUT to transmit at Highest, Middle, and Lowest frequency separately.
4. Set Frequency range and limit: 30MHz - 1 GHz and 20 nW or 1 GHz – 13GHz
5. Set RBW ≥ 100KHz for testing below 1GHz, 1MHz for testing above 1GHz, VBW ≥ RBW.
6. Set Sweep = auto.
7. Set Detector function = peak.
8. Allow the trace to stabilize.
9. Repeat above procedures until all frequencies measured were complete.

Test Setup:
The Bluetooth component's antenna ports(s) of the EUT are connected to the measurement instrument per an appropriate attenuator. The EUT is controlled by PC/software to emit the specified signals for the purpose of measurements.

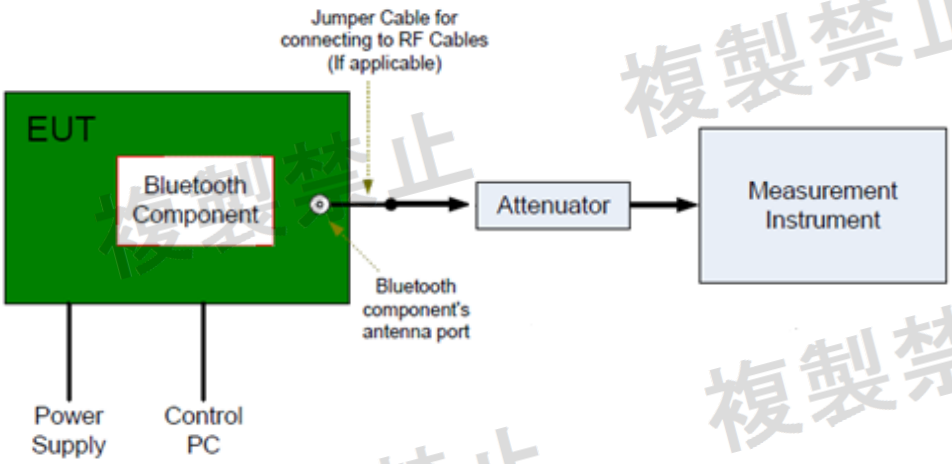

3.8.1 Limit (ARIB STD-T66, Clause 3.5 (1))

The limit on secondary emissions radiated from the receiving equipment within which the function of other radio equipment will not be impaired shall be, in terms of the power of a dummy antenna circuit that has the same electrical constant as the receiving antenna, 4 nW or less at a frequency below 1 GHz and 20 nW or less at a frequency of 1 GHz or higher as measured using the circuit.

3.8.2 Test Result

Test Condition	Test Mode	Antenna	Freq(MHz)	Freq.Range [MHz]	Freq. [MHz]	Result [dBm]	Limit [dBm]	Result [nW]	Limit [nW]	Verdict
NTNV	DH5	Ant1	2402	30~1000	849.65	-69.53	≤-54	0.11143	≤4	PASS
				1000~12500	3793.93	-64.74	≤-47	0.33574	≤20	PASS
			2441	30~1000	906.88	-70.20	≤-54	0.09550	≤4	PASS
				1000~12500	3803.13	-65.19	≤-47	0.30269	≤20	PASS
			2480	30~1000	787.09	-70.24	≤-54	0.09462	≤4	PASS
				1000~12500	3816.35	-64.95	≤-47	0.31989	≤20	PASS
	2DH5	Ant1	2402	30~1000	776.42	-70.45	≤-54	0.09016	≤4	PASS
				1000~12500	3750.23	-64.40	≤-47	0.36308	≤20	PASS
			2441	30~1000	971.87	-70.15	≤-54	0.09661	≤4	PASS
				1000~12500	3812.90	-64.68	≤-47	0.34041	≤20	PASS
			2480	30~1000	915.13	-70.58	≤-54	0.08750	≤4	PASS
				1000~12500	3841.65	-65.13	≤-47	0.30690	≤20	PASS
	3DH5	Ant1	2402	30~1000	860.32	-69.96	≤-54	0.10093	≤4	PASS
				1000~12500	3822.10	-64.58	≤-47	0.34834	≤20	PASS
			2441	30~1000	810.37	-69.72	≤-54	0.10666	≤4	PASS
				1000~12500	3794.50	-64.15	≤-47	0.38459	≤20	PASS
			2480	30~1000	802.12	-70.11	≤-54	0.09750	≤4	PASS
				1000~12500	3763.45	-64.30	≤-47	0.37154	≤20	PASS

3.8.3 Result

Please refer to the appendix F for test plots
The equipment met the requirement of this clause.

複製禁止

3.9 Interference prevention function

3.9.1 Limit

Item	Limits
Identification Code	≥48 bits

Measuring ID code Software
MAC IP List: MAC Scan

3.9.2 Test Procedure

1. In the case that the EUT has the function of automatically transmitting the identification code: a. Transmit the predetermined identification codes form EUT. b. Check the transmitted identification codes with the demodulator.
2. In the case of receiving the identification code: a. Transmit the predetermined identification codes form the counterpart. b . Check if communication is normal. c. Transmit the signals other than predetermined ID codes form the counterpart. d. check if the EUT stops the transmission, or if it displays that identification codes are different from the predetermined ones.

3.9.3 Conditions of Equipment under Test

Required normal mode of the applicable equipment (EUT)

3.9.4 TEST RESULTS

The radio equipment has an identification code. A verification of this code is done before a communication channel is established

MAC Address: 90B0EA613492

The equipment meet the requirement of this clause.

End