RE.41.LGTW
- L-gateway -
Modular IoT Base Station
Quick Installation Guide

Author	Ivo van Ling
Hardware Release	1.0
Quick Install Guide Version	**QIG_L-gateway_v1.20**
Date	29-08-2016
Covering Product code	**RE.41.LGTW**

Contents

1 Introduction 3
1.1 Check Your Package Contents 3
2 Safety Warnings 4
3 Identifying the L-gateway Unit 5
4 Connectors on the L-gateway Unit 6
4.1 Assembling the Power-over-Ethernet RJ-45 connector 6
4.2 Ethernet 0 (PoE) Pin Assignments 7
4.3 RS485 Pin Assignments 7
5 Installation Overview 8
6 Mounting Diagram 9
7 Connecting the L-gateway Unit to your network 10
8 Logging in to the Web Configuration Interface 11

Revision History

Revision	Reason	Author	Date
1.0	First version	Ivo van Ling	15-10-2015
1.1	Updated with fixed GPS coordinates option	Ivo van Ling	17-06-2016
1.11	Changed layout of the document	Ivo van Ling	20-06-2016

References

Reference	Description	Code
0		

Disclaimer

The specifications and information regarding the products in this manual are subject to change without notice. All statements, information, and recommendations in this manual are believed to be accurate but are presented without warranty of any kind, express or implied. Users must take full responsibility for their application of any products.

Notwithstanding any other warranty herein, all document files and software are provided "as is" with all faults. RFI Engineering B.V. disclaims all warranties, expressed or implied, including, without limitation, those of merchantability, fitness for a particular purpose and noninfringement or arising from a course of dealing, usage, or trade practice.

In no event shall RFI Engineering B.V. or its suppliers be liable for any indirect, special, consequential, or incidental damages, including, without limitation, lost profits or loss or damage to data arising out of the use or inability to use this manual, even if RFI Engineering B.V. or its suppliers have been advised of the possibility of such damages.

© RFI Engineering B.V. 2016

Modular IoT Base Station RE.41.LGTW Series Quick Installation Guide

The information contained in this document is subject to change. This document contains proprietary information, which is protected by copyright laws. All rights are reserved. No part of this document may be photocopied, reproduced or translated to another language or program language without prior written consent of RFI Engineering B.V.

1 Introduction

The L-gateway is a ruggedized modular outdoor gateway (base station) that enables versatile wireless connectivity to your Internet of Things (IoT) applications. With the modular 3 radio design, it can quickly be adapted to a variety of wireless sensor technologies at regional RF bands. Standard the L-gateway ships with one 868MHz LoRa® radio installed.

LoRa® RF technology has been pioneered by Semtech and is a 2-way wireless solution, operating in the license exempt ISM bands, that complements M2M cellular infrastructure. It provides a low-cost way to connect battery operated and mobile devices to the network infrastructure.

The L-gateway uses a web-based management system, but you can also configure the unit through the command line interface using SSH.

This document provides information on the following topics:

- L-gateway hardware identification.
- L-gateway hardware installation.
- L-gateway logging into the web user interface.

1.1 Check Your Package Contents

These are the items included with your L-gateway purchase:

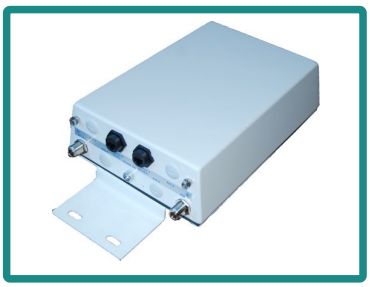

1x L-gateway unit

1x PoE Power Supply unit

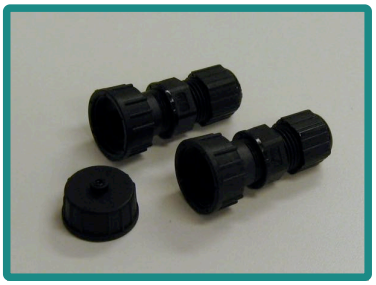

2x RJ45 plug assembly
1x RJ45 watertight cap

Mains Power cables
Dependent on the territory different power supplies will be supplied. In Europe a European style 220V/AC power cable is supplied. In Canada and the USA an 110V/AC power cable is supplied.

European 220V/AC cable

USA/Canadian 110V/AC cable

The information contained in this document is subject to change. This document contains proprietary information, which is protected by copyright laws. All rights are reserved. No part of this document may be photocopied, reproduced or translated to another language or program language without prior written consent of RFI Engineering B.V..

Multi function mounting kit
The multi function mounting bracket mounts on the back of the L-gateway unit housing. The two ubolts and clamps mount through the four mounting holes on the unit.

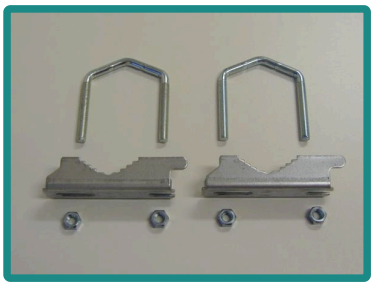

2x ubolt, 2x ubolt clamp and 4x M8 nut

2 Safety Warnings

This unit must be installed by a trained professional installer only. Please read all safety warning before commencing an installation.

Electrical Power Warning
Do not locate any antenna near overhead power lines or other electric light or power circuits, or where the antenna can come into contact with such circuits. When installing antennas, take extreme care not to come into contact with such electrical circuits, as they can cause serious injury or death.

A safe grounding system is necessary to protect your L-gateway from lightning strikes and the build-up of static electricity when installed in an outside environment. Direct grounding of the antenna mast and L-gateway is important. When mounting the L-gateway to an antenna mast, you have to connect the L-gateway to the same grounding system with the AC wall outlet.

The grounding system must comply with the National Electrical Code and safety standards that apply in your country. Always check with a qualified electrician if you are in doubt as to whether your outdoor installation is properly grounded.

Lightning Activity Warning
Do not work on the system or connect or disconnect cables during periods of lightning activity.

The L-gateway is designed to be installed in an outdoor environment, typically on a tower or a tall building. Plan your installation carefully and completely before you begin. Do not work on a wet or windy day. Do dress properly, use shoes with rubber soles and heels, long sleeved shirts or jackets to avoid the risk of coming in contact with live mains wiring.

The information contained in this document is subject to change. This document contains proprietary information, which is protected by copyright laws. All rights are reserved. No part of this document may be photocopied, reproduced or translated to another language or program language without prior written consent of RFI Engineering B.V..

3 Identifying the L-gateway Unit

On the back of the L-gateway radio unit and on the packaging you can find two labels uniquely identifying the radio unit. The first label contains the Serial Number and Production Date. The second label contains the GSM IMEI number, LoRa gateway ID and the MAC addresses of the installed Ethernet of the radio unit.

The L-gateway serial number label contains the following information:

- The L-gateway model number followed by the serial number, such as RE.41.LGTW.015977
- Production date, such as 2015-10-20 12:43:12
- GSM IMEI number, such as 357044060020028
- Gateway ID, such as 976C64DFD4A92617
- MAC addresses of the main Ethernet port, such as Ethernet 0 MAC Address (eth0): 40:28:14:00:03:D1

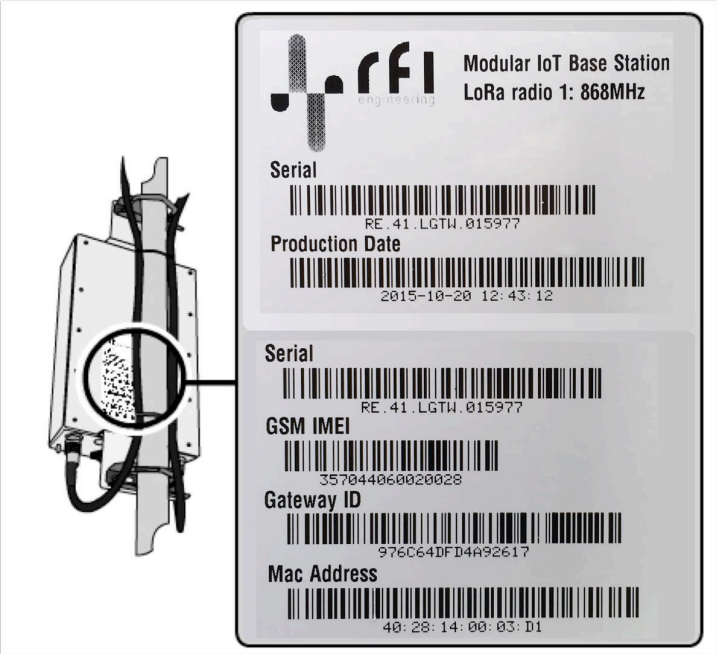

The serial number indicates what type of L-gateway unit this is, how many LoRa radio's are installed, what frequency the unit operates on and the revision of the hardware. Please note that you always need your product model and serial number when requesting support from RFI Engineering B.V..

The information contained in this document is subject to change. This document contains proprietary information, which is protected by copyright laws. All rights are reserved. No part of this document may be photocopied, reproduced or translated to another language or program language without prior written consent of RFI Engineering B.V..

4 Connectors on the L-gateway Unit

This section provides an overview of the connectors on the L-gateway unit.

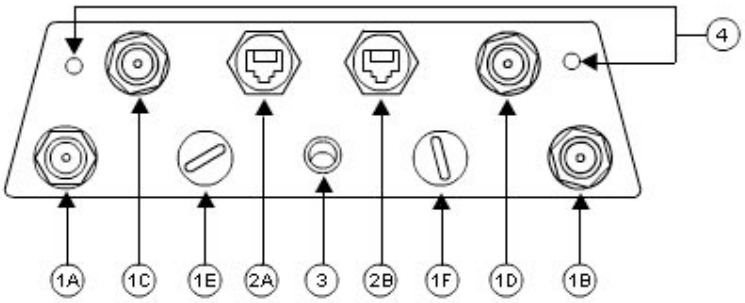

1A	LoRa Radio 0, N-connector female
1B	Optional LoRa Radio 1, N-connector female
1C	Optional LoRa Radio 2, N-Connector female
1D	Optional GPS connector, N-connector female
1E	Optional radio connector
1F	Optional radio connector
2A	RS485 console port
2B	Ethernet 0, including 802.3af PoE
3	Green power LED (on = power on)
4	Ground (earth) connectors

4.1 Assembling the Power-over-Ethernet RJ-45 connector

This section provides instructions for connecting the Power-over-Ethernet cable to the L-gateway enclosure. The port labeled "Ethernet 0 (PoE)" provides both the Ethernet data connection to the unit as well as the 48V/DC (802.3af compliant) power connection.

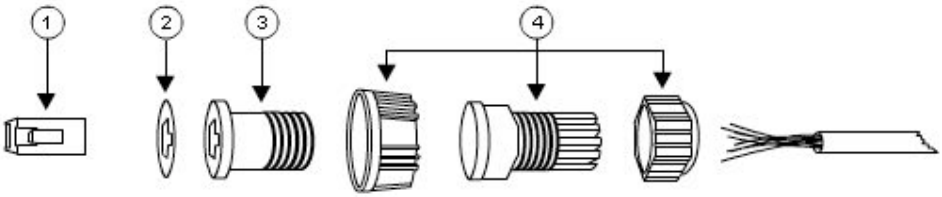

1	RJ45 plug
2	Gasket seal
3	Plug holder
4	Seal assembly

Assemble the water tight RJ-45 connector plug and connect the RJ-45 connector plug to the Ethernet cable.

The information contained in this document is subject to change. This document contains proprietary information, which is protected by copyright laws. All rights are reserved. No part of this document may be photocopied, reproduced or translated to another language or program language without prior written consent of RFI Engineering B.V..

4.2 Ethernet 0 (PoE) Pin Assignments

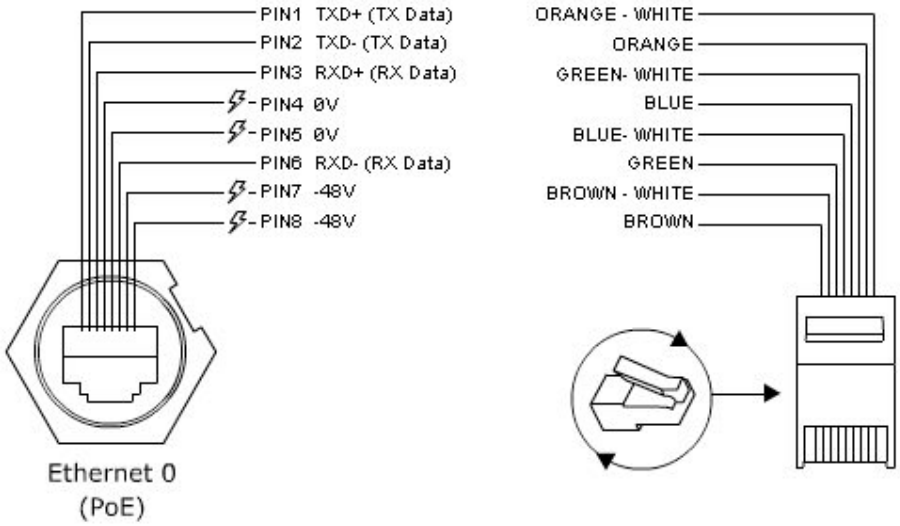

4.3 RS485 Pin Assignments

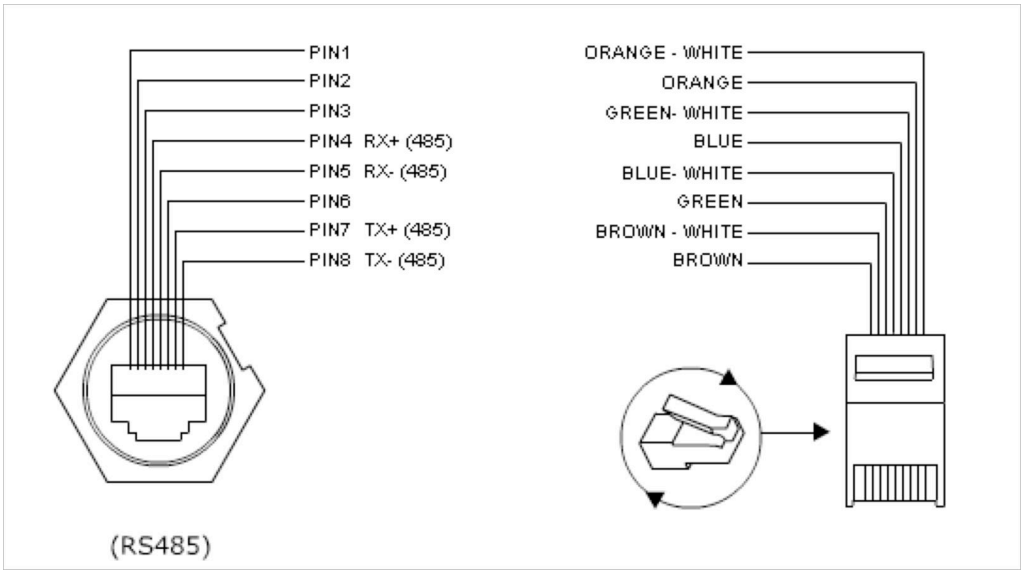

The information contained in this document is subject to change. This document contains proprietary information, which is protected by copyright laws. All rights are reserved. No part of this document may be photocopied, reproduced or translated to another language or program language without prior written consent of RFI Engineering B.V..

5 Installation Overview

The L-gateway is a radio device capable of transmitting in the following unlicensed frequency bands: 868MHz, 915MHz or 928MHz. Because the L-gateway unit operates in the unlicensed radio frequency bands it is susceptible to interference that can reduce throughput and range. Follow these simple guidelines to optimize product performance:

- Install the L-gateway in an area where structures, trees, or hills do not obstruct radio signals to and from the unit.
- Install the L-gateway at a height sufficient to provide a clear line-of-sight signal path.

The L-gateway can be mounted on an antenna tower or, with an optional wall-mounting bracket, to the side of a building. The optional wall-mounting bracket will provide a convenient mounting location when the roof overhang is not excessive and/or the location is high enough to provide a clear line of sight.

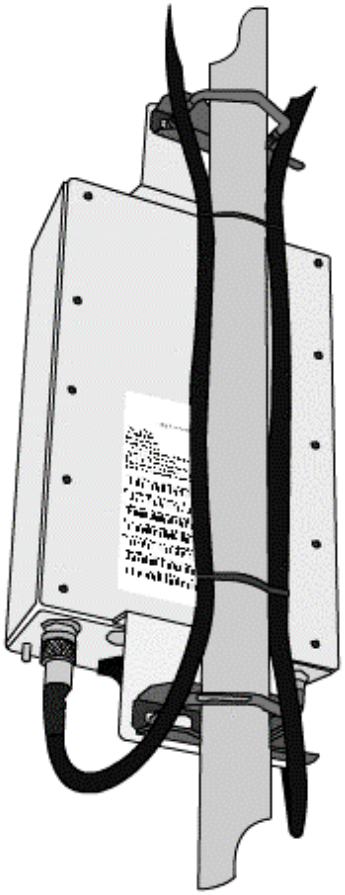

The information contained in this document is subject to change. This document contains proprietary information, which is protected by copyright laws. All rights are reserved. No part of this document may be photocopied, reproduced or translated to another language or program language without prior written consent of RFI Engineering B.V..

6 Mounting Diagram

To mount the L-gateway onto a vertical pole attach the U-bolts (no. 1) to the brackets (no. 2), then slide the completed enclosure assembly over the pole.

Adjust the L-gateway enclosure to the desired position on the pole (up and down or rotational).

Use a nut wrench to tighten the U-bolts (no.3) and secure the L-gateway enclosure in place. Tighten all four nuts. When tightening the U-bolts, ensure that the bolts are not twisted. The ends of each U-bolt should be protruding through the bracket evenly at the same distance.

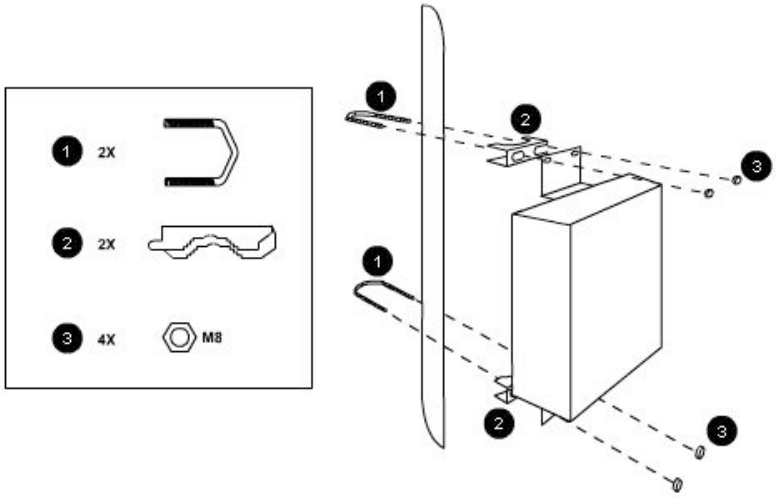

Figure 1: U-bolt assembly

Check that the U-bolts are tight and that the L-gateway enclosure is securely anchored to the pole.

The information contained in this document is subject to change. This document contains proprietary information, which is protected by copyright laws. All rights are reserved. No part of this document may be photocopied, reproduced or translated to another language or program language without prior written consent of RFI Engineering B.V..

7 Connecting the L-gateway Unit to your network

A. Connect an Ethernet cable to the port labeled "**Ethernet 0**" on the L-gateway.

B. Connect the other end of the Ethernet cable to the port labeled "**J1 Data & PWR**" on the Power-over-Ethernet (PoE) power supply.

C. Connect an Ethernet cable to the port labeled "**J2 data**" on the Power-over-Ethernet (PoE) power supply.

D. Connect the other end of the Ethernet cable to a router or a LAN.

E. Connect the power cable to the back of Power-over-Ethernet (PoE) and power the unit on.

When you have completed the above steps the power LED on the L-gateway should be lit and the connected network should look like this:

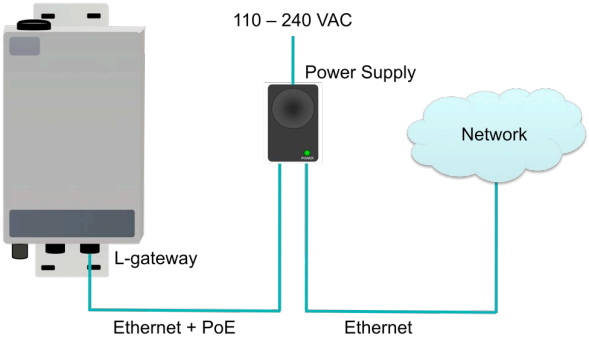

Figure 2: L-gateway Ethernet Connections

The L-gateways are capable of using all types of PoE power supplies and are also compatible with legacy (non 802.3af compliant) Cisco Power-over-Ethernet power supplies. The L-gateway PoE interoperability has been verified with the following PoE power supplies:

- RFI Engineering Single Port 20W Power Over Ethernet Adapter.
- Phihong Single Port 15.4W Power Over Ethernet Adapter.
- Cisco Catalyst 3560 Series 10/100 Switches.
- HP ProCurve 2600 series Switches.
- 3Com SuperStack 3 4400 PWR Switches.
- Gemtek Systems E-820 Managed PoE switch.
- PowerDsine 6500 series Ethernet midspan solution.
- Level-One FSW-1670TX 8+8 POE 10/100 Mbps Web Smart Switch.
- Repotec RP-PE168L PoE Switch 16x10/100 (8x PoE 802.3af).

The information contained in this document is subject to change. This document contains proprietary information, which is protected by copyright laws. All rights are reserved. No part of this document may be photocopied, reproduced or translated to another language or program language without prior written consent of RFI Engineering B.V..

8 Logging in to the Web Configuration Interface

You can connect to, and configure the L-gateway unit using a standard web browser. The unit ships with the following factory default settings:

- IP address: **192.168.168.1**.
- Netmask: **255.255.255.0**

- Username: **admin**
- Password: **rfi123**

In this Quick Installation Guide we assume your computer will be in the same IP address range as the L-gateway. Please note that the IP configuration might be different in your case, dependent on the setup of your LAN.

In order to log in you have to open your Web browser and type http://192.168.168.1 into the URL address box. Then press the Enter or Return key. A login screen will be displayed for logging into the web server pages. The default user name is **`admin`** and the default password is **`rfi123`**.

Figure 3: Connect to the IP address of the L-gateway (192.168.168.1)

The information contained in this document is subject to change. This document contains proprietary information, which is protected by copyright laws. All rights are reserved. No part of this document may be photocopied, reproduced or translated to another language or program language without prior written consent of RFI Engineering B.V..

After successful login the following status page will be displayed:

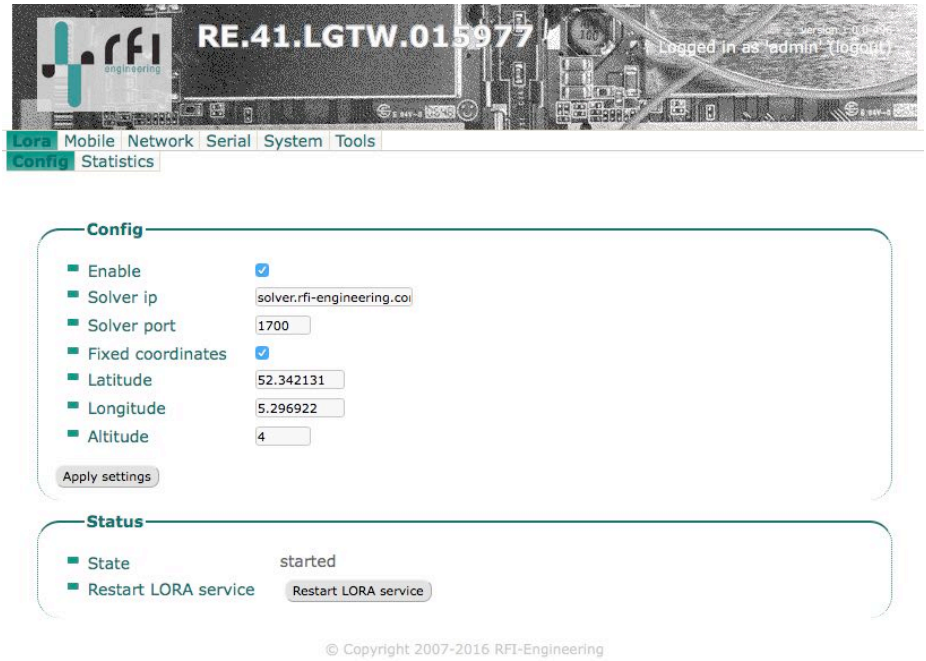

Figure 4: L-gateway LoRa status page

The LoRa configuration is disabled per default. By clicking 'Enable' the LoRa function is switched on.

LoRa sensor messages are received on the radio interface and are forwarded to your back office over a simple UDP interface on port 1700. This UDP protocol is the default transport mechanism as implemented by the Semtech packet forwarder as found here: https://github.com/Lora-net/packet_forwarder.

You can point the L-gateway to your back office by changing the 'Solver ip' and 'Solver port' setting to reflect your own back office settings.

As long as the L-gateway is deployed outdoors and has sufficient reception the location of the L-gateway is automatically reported based on the basis of GPS signals. If you find that you have no GPS reception it is possible to override this feature by enabling 'Fixed coordinates'. Once this feature is enabled the Latitude, Longitude and Altitude as defined by the user are sent to the back office.

The information contained in this document is subject to change. This document contains proprietary information, which is protected by copyright laws. All rights are reserved. No part of this document may be photocopied, reproduced or translated to another language or program language without prior written consent of RFI Engineering B.V..