erco&gener

L'esprit Modem

User Guide

GenPro 54e

Référence : EG_GenPro54e_1040M_UG_002_UK

Révision : 002

Date : 01/06/2015

Document History

Rev.	Modifications	Author	Date	Validation	Date
000	Creation	YST	20/01/2015		
001	New presentation. Update power consumption.	YST	20/05/2015	PBR	22/05/2015
002	Add consumption information § 3.10 Power supply V_{BAT}	PBR	01/06/2015	YST	01/06/2015

The main modifications of this document compared to the previous version are easily identifiable on a screen by the blue color of the text.

Descriptions and non-contractual illustrations in this document are given as an indication only.
ERCOGENER reserves the right to make any modification.

TABLE DES MATIERES

PRESENTATION 10
WARNING 11
COPYRIGHT 12
SYMBOLS 13
1 SECURITY RECOMMENDATIONS 14
1.1 GENERAL SECURITY 14
1.2 SECURITY IN A VEHICLE 15
1.3 CARE AND MAINTENANCE 15
1.4 YOUR RESPONSIBILITY 15
2 PRESENTATION 16
2.1 CONTENT 16
2.2 MODEM PACKAGING 16
2.3 MECHANICAL CHARACTERISTICS 17
2.3.1 Fixing brackets 17
2.4 CHARACTERISTICS AND SERVICES 18
2.4.1 Services 18
2.5 ENVIRONMENTAL CLIMATIQUES 20
3 INTERFACES 21
3.1 FRONT SIDE 21
3.2 BACK SIDE 22
3.3 FUNCTIONAL DESCRIPTION 23
3.3.1 General 23
3.3.2 Functional architecture of serial ports 23
3.4 POWER SUPPLY 24
3.4.1 Power supply cable 24
3.4.2 Power supply 7.2 – 32V_{DC} 24
3.4.2.1 Internal battery 25
3.4.2.2 Consumption of the GenPro 54e 26
3.4.2.3 Power Dimensioning 27
3.5 BUS ONE WIRE 28
3.5.1 Bus One Wire 28
3.5.2 Option Bus Multi 1- Wire S0470B 29
3.6 ANALOG INPUTS ANA1 AND ANA2 30
3.6.1 Analog input 0 – 10 V_{DC} 30
3.6.2 Option Analog inputs in current 4 – 20 mA S0475B 31
3.7 OPTO-COUPLED INPUTS 32

Descriptions and non-contractual illustrations in this document are given as an indication only.
ERCOGENER reserves the right to make any modification.

3.8 OPTO-COUPLED INPUTS INSULATED 33
3.9 OUTPUTS 34
3.10 POWER SUPPLY V_{BAT} 35
3.11 BUZZER 36
3.12 SERIAL LINK RS232_0 37
3.13 SERIAL LINK RS232_1 / RS485 38
3.13.1 Serial Link RS232_1 standard 38
3.13.2 RS485 option S0520A 39
3.14 SERIAL LINK RS232_2 / BUS CAN 41
3.14.1 Lien série RS232_2 standard 41
3.14.2 Bus CAN MCP2515 option S0467B 42
3.15 POWER SUPPLY POWER_OUT 43
3.16 BOOT SIGNAL 44
3.17 RESET SIGNAL 45
3.18 ACCELEROMETER 46
3.19 SIM CARD READER 46
3.20 DUAL SIM CARD READER 46
3.21 LED OF THE MODEM 47
3.21.1 GSM led of the modem 47
3.21.1.1 Without application 47
3.21.1.2 With standard library 47
3.21.1.3 The application ERCOGENER EasePro_Vx 47
3.21.1.4 Owner application 47
3.21.2 Led usager 48
3.22 INTERFACE AUDIO 49
3.22.1 Microphone inputs 49
3.22.2 Loudspeaker output (Speaker) 50

4 GSM 51

4.1 GSM EXTERNAL ANTENNA 51

5 USE OF THE MODEM 52

5.1 SPECIFIC RECOMMENDATIONS FOR THE USE OF THE MODEM IN VEHICLES 52
5.1.1 Recommended connection on the battery of a truck 52
5.2 TURNING OFF THE MODEM 53
5.3 STARTING WITH THE MODEM 54
5.3.1 Mounting of the modem 54
5.3.2 Install SIM card 54
5.4 USE OF THE MODEM 55
5.4.1 Checking the communication with the modem 55
5.4.1.1 Without application 55
5.4.1.2 Standard Library 56
5.4.1.3 The application ERCOGENER EasePro_Vx 56

Descriptions and non-contractual illustrations in this document are given as an indication only.
ERCOGENER reserves the right to make any modification.

5.4.1.4 Owner application 57
5.5 CHECKING THE QUALITY OF THE GSM RECEPTION SIGNAL 57
5.6 VERIFICATION OF THE PIN CODE 58
5.7 VERIFICATION OF THE MODEM REGISTRATION ON GSM NETWORK 58
5.8 VERIFICATION OF THE MODEM REGISTRATION ON GPRS NETWORK 59
5.9 RECOMMENDED ACCESSORIES 60
6 SUPPORT CLIENT 60
ANNEX 1 – 4 PINS MICRO-FIT CABLE (POWER) 61
ANNEX 2 – 14 PINS MICRO-FIT CABLE (INPUTS/OUTPUTS) 62
ANNEX 3 – 16 PINS MICRO-FIT CABLE (14 WIRES, SERIAL LINKS) 63
ANNEX 4 - 16-PINS MICRO-FIT CABLE (16-WIRES, SERIAL LINK, BOOT AND RESET) 64
ANNEXE 5 - ABRÉVIATIONS 65
DECLARATION OF CONFORMITY 69

Descriptions and non-contractual illustrations in this document are given as an indication only.
ERCOGENER reserves the right to make any modification.

Index des Tablex

Table 1 : Mechanical characteristics 17
Table 2 : Characteristics and services 18
Table 3 : Environmental characteristics 20
Table 4 : Front side connector 21
Table 5 : Effects of power supply defect 24
Table 6 : Characteristics of the polymer lithium battery 25
Table 7 : Power supply range 26
Table 8 : Consumption in Low Power mode @ 25 °C without battery charge 26
Table 9 : Consumption in Network Attached @ 25 °C without battery charge 26
Table 10 : Consumption in transfer data mode @ 25 °C without battery charge 26
Table 11 : Consumption of battery charge @ 25 °C 27
Table 12 : Description of the One Wire bus 28
Table 13 : Bus One Wire - Electrical characteristics 28
Table 14 : Description of the Multi 1- Wire bus 29
Table 15 : Bus Multi 1- Wire - Characteristics électriques 29
Table 16 : Description of the Analog input 0 – 10 V 30
Table 17 : Characteristics of the Analog input 0 – 10 V 30
Table 18 : Description of the Analog input 4 – 20 mA 31
Table 19 : Characteristics of analog inputs 4 – 20 mA 31
Table 20 : Description of the digital opto-coupled inputs 32
Table 21 : Characteristics of opto-coupled inputs 32
Table 22 : Description of the opto-coupled insulated 33
Table 23 : Characteristics des Entrées opto-couplées isolées 33
Table 24 : Description of the open-collector output 34
Table 25 : Characteristics of open-collector output 34
Table 26 : Description of power supply V_{BAT} 35
Table 27 : Conditions of use of the output power supply V_{BAT} 35
Table 28 : Description Sortie buzzer 36
Table 29 : Characteristics of buzzer output 36
Table 30 : Example of transducer tested with the GenPro 54e 36
Table 31 : Description of pins of serial link RS232_0 37
Table 32 : Characteristics of serial link RS232_0 37
Table 33 : Description of pins of serial link RS232_1 38
Table 34 : Characteristics of serial link RS232_1 38
Table 35 : Description of pins of serial link RS485 option S0520A 39
Tableau 36 : Characteristics of serial link RS485 option S0520A 39
Table 37 : Description of pins of serial link RS232_2 41
Table 38 : Characteristics of serial link RS232_2 41
Table 39 : Description of serial link CAN MCP2515 option S0467B 42
Table 40 : Characteristics du lien série Bus CAN MCP2515 option S0467B 42
Table 41 : Description of Power_Out 43

Descriptions and non-contractual illustrations in this document are given as an indication only.
ERCOGENER reserves the right to make any modification.

Table 42 : Characteristics of Power_Out 43
Table 43 : Description de l'entrée BOOT 44
Table 44 : Use condition of BOOT signal 44
Table 45 : Description of the RESET signal pin 45
Table 46 : Use condition of RESET signal 45
Table 47 : Characteristics of the SIM card reader 46
Table 48 : Characteristics of the 2nd SIM card reader 46
Table 49 : Status of GSM LED 47
Table 50 : Description of Microphone inputs 49
Table 51 : Characteristics of polarization for Microphone 49
Table 52 : Dynamic characteristics for Microphone 49
Table 53 : Description of loudspeaker outputs 50
Table 54 : Characteristics of loudspeaker output 50
Table 55 : Characteristics of the GSM external antenna 51
Table 56 : RSSI value 57
Table 57 : Verification of PIN code 58
Table 58 : Verification of modem registration on GSM network 58
Table 59 : Verification of the modem registration on GPRS network 59
Table 60 : Characteristics of power supply cable 61
Table 61 : 14-wire Inputs/Outputs cable 62
Table 62 : 14-wire Inputs/Outputs cable 62
Table 63 : Characteristic 16 pins, 14 wire serial link cable 63
Table 64 : Wiring of 16 pins, 14 wires serial links cable 63
Table 65 : Characteristic 16 pins serial link cable (Boot + Reset) 64
Table 66 : Wiring of 16 pins, 16 wires serial links cable (Boot + Reset) 64

Descriptions and non-contractual illustrations in this document are given as an indication only.
ERCOGENER reserves the right to make any modification.

Index des Figures

Figure 1 : Content 16
Figure 2 : Dimensions 17
Figure 3 : Back side 17
Figure 4 : Front side 21
Figure 5 : Back side 22
Figure 6 : Functional architecture 23
Figure 7 : Option functional serial ports 23
Figure 8 : Max consumption 27
Figure 9 : Internal electrical scheme of the One Wire bus 28
Figure 10 : Internal electrical scheme of analog input 0 – 10 V 30
Figure 11 : Internal electrical scheme of analog input 4 – 20 mA 31
Figure 12 : Internal electrical scheme of opto-coupled inputs 32
Figure 13 : Internal electrical scheme of insulated inputs 33
Figure 14 : Internal electric scheme of the output 34
Figure 15 : Example of relay control 34
Figure 16 : Example of transducer tested with the GenPro 54e 36
Figure 17 : Normalized signals of the serial link RS232_0 37
Figure 18 : Normalized signals of serial link standard RS232_1 38
Figure 19 : Normalized signals of serial link standard RS232_1 with S0520A option 38
Figure 20 : Length of Serial Link RS485 cable option S0520A 40
Figure 21 : Normalized signals of serial link RS485 option S0520A 40
Figure 22 : Normalized signals of serial link RS232_2 41
Figure 23 : Output signal of serial link CAN MCP2515 option S0467B 42
Figure 24 : Normalized signals of serial link CAN MCP2515 option S0467B 42
Figure 25 : Internal electrical scheme of the Power_Out 43
Figure 26 : Drop of voltage 43
Figure 27 : Wiring scheme of BOOT signal 44
Figure 28 : Wiring scheme of RESET signal 45
Figure 29 : Chronogram of RESET signal 45
Figure 30 : positioning of the accelerometer axis 46
Figure 31 : Leds of Back side 47
Figure 32 : Wiring scheme of microphone input 49
Figure 33 : Wiring scheme of speaker output 50
Figure 34 : GSM external antenna 51
Figure 35 : Recommended connection on the battery of a truck 52
Figure 36 : Mounting of the modem 54
Figure 37 : Install SIM card 54
Figure 38 : 4-pin power supply cable 61
Figure 39 : Fuse Mini Blade 61
Figure 40 : 14-wires Inputs/Outputs cable 62
Figure 41 : 16 pins serial link cable (Serial links) 63

Descriptions and non-contractual illustrations in this document are given as an indication only.
ERCOGENER reserves the right to make any modification.

Figure 42 :16-pins Micro-FIT cable (serial link, Boot and Reset) 64

Descriptions and non-contractual illustrations in this document are given as an indication only.
ERCOGENER reserves the right to make any modification.

Presentation

Entirely dedicated to geo-localization and embedded data services, the modem GenPro 54e combines the GSM / GPRS functions in the same robust casing.
The modem is Quad-Bands (850/900/1800/1900 MHz) GSM/GPRS Class 10.
The GenPro 54e provides 3 operating modes:

- External mode (standard): The control is done by an external application. The modem is used with the AT command set (see Commands List EG_EGM_CL_xxx_yy of ERCOGENER).
- Autonomous mode (optional): Once configured, the modem is autonomous, it cyclically registers the positions and tranmits them automatically to the client's application via different services: SMS, GSM Data, TCP socket GPRS (see EG_EasePro_Vx_CL_yyy_UK of ERCOGENER).
- Specific development mode: the EGM development tool allows a development of additional and customized applications. For more information about the tools and the training, please contact our sales department.

The GenPro 54e can be equipped with the options One Wire multi slave, Bus CAN and DUAL SIM.

Its protocols of IP connectivity integrated in the embedded application EasePro_Vx, are also available under EGM libraries for a specific development, allowing a quick installation of embedded telematics solutions with high added-value.

This document describes the modem and provides the following information:

- General presentation,
- Functional description,
- Available basic services,
- Installation and use of the modem (first level),
- Trouble shooting,
- Recommended accessories for the use of the modem.

For more information about this document, ERCOGENER puts at your disposal the following elements:

- Commands List
  - External Mode EG_EGM_CL_xxx_yy
  - Autonomous Mode EG_EasePro_Vx_CL_yyy_UK
- Application Note EG_GenPro54e_1040_AN_xxx_yy
- Release Note EG_GenPro54e_1040_RL_xxx_yy
- Client support (Hot-Line)

Descriptions and non-contractual illustrations in this document are given as an indication only.
ERCOGENER reserves the right to make any modification.

Warning

- ERCOGENER advises to read carefully all documents linked to the product GenPro 54e (User Guide, Application Notes, Command List). Download on your web site ercogener.com
- ERCOGENER cannot be held responsible for:
  - The problems due to an inappropriate use of the GenPro 54e.
  - The problems due to a wrong configuration
  - The problems due to a wrong use of an embedded software application developed or supplied by a third party.
  - The dysfunctions due to the absence or a bad coverage of the GSM, GPRS networks.
  - The dysfunctions if the product is used for the watching of physical persons where human life is engaged.
- ERCOGENER reserves the right to modify the functions of its products "GenPro 54e" and "EasePro" without previous notice.

- To avoid any risk of electrocution, do not open the casing.
- For any functioning, the casing must be closed.
- No internal part can be repaired by the user. The **GenPro 54e** must be returned to the factory for any repair.
- The **GenPro 54e** must be placed in a normally ventilated area, out of sources of heat.
- In order to guarantee the electromagnetic compatibility, the length of the serial cable, the power supply cable and the inputs/outputs cable must not exceed 3 meters.
- The **GenPro 54e** must not be connected directly to the mains supply; a voltage adapter must be used.

SCRAP THE WORN BATTERIES ACCORDING TO INSTRUCTIONS.

Copyright

The reproduction, transfer, distribution or storage of part or the totality of the contents of this document, in any form, without the prior written authorization of ERCOGENER is strictly prohibited.

GenPro 54e is a trademark of ERCOGENER.
Hayes is a registered trademark of Hayes Microcomputer Product Inc. The names of products and companies mentioned in this document may be names or trademarks of their respective holders.

The use of some products or services described in this document may require a paying subscription. The availability of some products or services described in this document may change, depending on the configurations and the materials.

In some countries, restrictions of use of the devices may be applied. For more information, thank you to contact your nearest legally qualified local government representative.

ERCOGENER follows a method of continuous development. Consequently, ERCOGENER reserves the right to change and improve any of its products described in this document, without notice.
The contents of this document are provided “as it is”. Except for the applicable obligatory laws, no guarantee in any form, explicit or implicit, including but without being limited to it the implicit guarantees of aptitude to marketing and of appropriateness to a particular use, is granted concerning the precision, the liability or the contents of this document. ERCOGENER reserves the right to revise or withdraw this document at any time and without notice.

ERCOGENER cannot be held responsible for any loss of data or income, as well as particular damage, incidental, consecutive or indirect.

Symbols

The following symbols are used to highlight the important information of this userguide.

A symbol for the essential information linked to the module integration and performance.

A warning symbol indicates the actions that could harm or damage the module

Descriptions and non-contractual illustrations in this document are given as an indication only.
ERCOGENER reserves the right to make any modification.

1 Security recommendations

1.1 General security

It is important to respect the specific regulations linked with the use of radio equipment, in particular with the possible risks of interference due to radio frequency (RF). Please respect carefully the following security advices.

Turn OFF your GSM modem:

- On an aircraft, the use of cellular telephone can endanger the plane operations; disturbing the cellular network is illegal. The non-observance of this instruction can lead to the suspension or the exclusion of the cellular phone services, or even to a trial, or both,
- At a refueling station,
- In any area with a potential explosive atmosphere that could cause an explosion or a fire,
- In hospitals and other places where medical equipment may be used.

Restrictions of use of radio equipments in:

- Fuel warehouses,
- Chemical factories,
- Places where destruction operations are in the running,
- Other places where signs indicate that the use of cellular phones is prohibited or dangerous.
- Other places where you should normally turn OFF the engine of your vehicle.

There can be a danger associated with the use of your GSM modem close to insufficiently protected medical equipments such as audio devices and pacemakers.

Consult the manufacturers of medical equipment to know if it is adequately protected.

Using your GSM modem close to other electronic equipments may also cause interferences if the equipment is insufficiently protected.

Pay attention to the warnings and the recommendations of the manufacturers.

The modem is designed to be used with "fixed" and "mobile" applications:

- “Fixed" application: The GSM modem is physically linked to a site and it is not possible to move it easily to another site.
- "Mobile" application: The GSM modem is designed to be used in various places (other than fixed) and is intended to be used in portable applications.
- The modem must be used at more than 20cm from the human body.

This equipment is supplied in Very Low Security Voltage and at non-dangerous energy level.

Descriptions and non-contractual illustrations in this document are given as an indication only.
ERCOGENER reserves the right to make any modification.

1.2 Security in a vehicle

Do not use your Modem whilst driving, unless equipped with a correctly installed ear-piece/hands-free kit.

Respect the national regulations linked with the use of cellular telephones in vehicles. Road safety is always a priority.

An incorrect installation of the GSM modem in a vehicle could cause an incorrect functioning of the vehicle's electronics. To avoid such problems, make sure that the installation was made by a qualified person. During the installation, a verification of the electronic protection system of the vehicle must be done.

The use of a warning equipment that activates the headlights or the horn of a vehicle on public highway is not authorized.

1.3 Care and maintenance

The following suggestions will help you to preserve this product for many years.

Do not expose the modem to the extreme environments, to high temperature or high humidity.

Do not use or store the modem in dusty or dirty places, it could be damaged.

Do not try to disassemble the modem, at the risk of cancelation of the guarantee.

Do not expose the modem to water, rain or spilled beverage, it is not impermeable.

Avoid dropping, striking, or shaking the modem violently. The lack of care can damage it.

Do not place the modem next to computer disks, credit or travel cards or other magnetic supports. The information contained on disks or cards can be affected by the modem.

The use of other equipments or accessories not made or not authorized by ERCOGENER can cancel the guarantee of the modem.

The battery is not under guarantee.

1.4 Your responsibility

This modem is under your responsibility. Treat it with care, it is not a toy. Keep it always in a secure place and out of the reach of children.

Try to remember your PIN and PUK codes. Familiarize yourself with the modem and use the security functions to lock it in case of non-authorized using or in case of theft.

Descriptions and non-contractual illustrations in this document are given as an indication only.
ERCOGENER reserves the right to make any modification.

2 Presentation

2.1 Content

The GenPro 54e is supplied with:

- a GenPro 54e cardboard packaging,
- a modem GenPro 54e,
- 2 fixing brackets,
- a 4-wire power supply cable, input/output (Red/Black/Yellow/Brown) stripped with fuse.
- a 14-wire stripped cable equipped with a 14-pin connector, Inputs/Outputs.
- a 14-wire cable equipped with a 16-pin connector, with a Sub- D 9 pins and stripped wires.
- a technical sheet (Instructions Sheet).

Figure 1 : Content

2.2 Modem packaging

The external dimensions of the modem packaging are:

- Width : 160 mm,
- Height : 280 mm,
- Length : 64 mm.
- Weight : 785 g

2.3 Mechanical characteristics

Table 1 : Mechanical characteristics

Dimensions	95 x 92 x 40 mm (excluding connectors)
Complete dimensions	104 x 92 x 40 mm
Weight	≈ 206 grams (modem only) < 618 grams (modem + brackets + cables)
Volume	≈ 382 cm³
Casing	Aluminium Profile
Waterproof level	IP31

The illustration below shows the dimensions of the modem including the clearances necessary for the installation of the modem.

Figure 2 : Dimensions

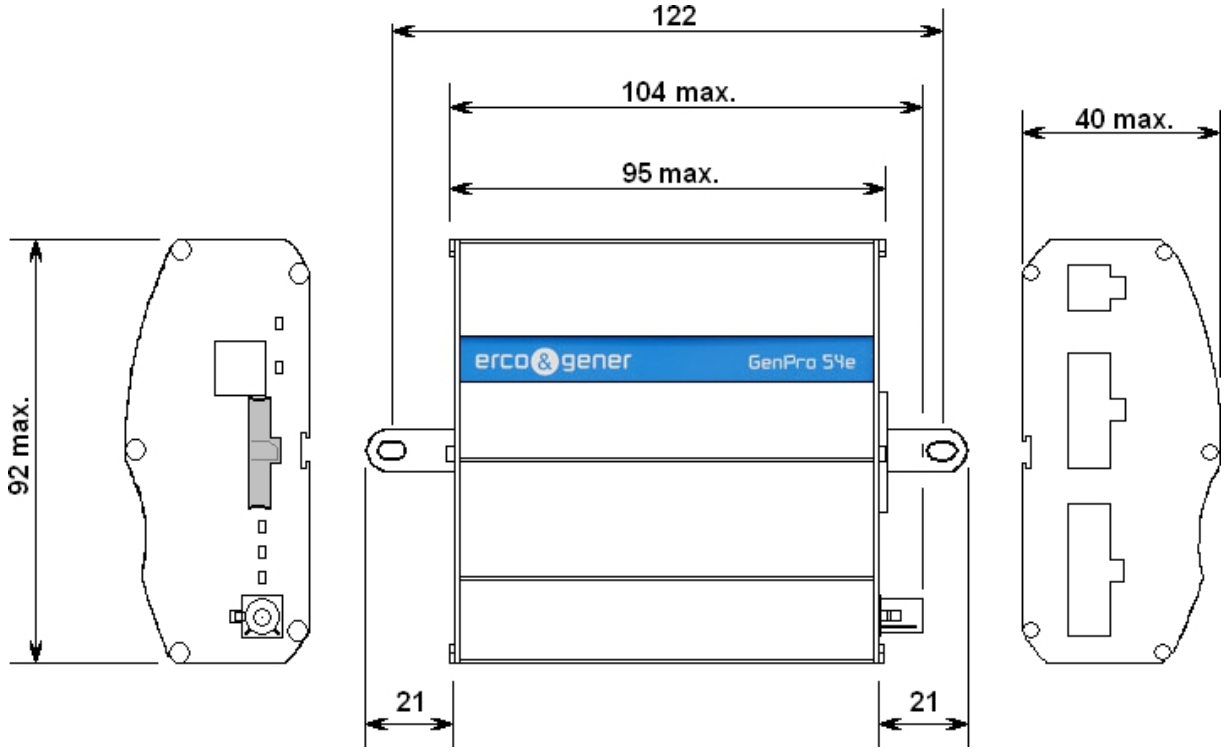

2.3.1 Fixing brackets

2 brackets to fix the modem on a support.

Figure 3 : Back side

2.4 Characteristics and Services

2.4.1 Services

The GenPro 54e is :

- A GSM/GPRS modem class10 dedicated to asynchronous binary data transmission, SMS and voice.

The modem characteristics and the available services are summarized in the table below.

Table 2 : Characteristics and services

Function 2G GSM / GPRS / EDGE		
•GSM/GPRS Protocol Stack		3GPP Release 99
• Mobile Station Class	Class B[1]	
• GSM/GPRS Bands	4 band GSM 850 E-GSM 900 DCS 1800 PCS 1900 MHz	
• GSM/GPRS Power Class	Class 4 (33 dBm) for 850/900 Class 1 (30 dBm) for 1800/1900	
Packet Switched Data Rate	GPRS multi-slot class 10 [2] Coding scheme CS1-CS [4] Up to 85.6 kb/s DL [3] Up to 42.8 kb/s UL [3]	
Circuit Switched	Data Rate Up to 9.6 kb/s DL/UL [3] Transparent mode Non transparent mode	
Network Operation Modes	I to III	
• SMS	MT/MO/CB PDU/Text mode SMS over PSD or CSD	
• Sensibility	GSM850/E-GSM900 @ 25 °C -110 dBm, Downlink RF level @ BER Class II < 2.4 % [5] DCS1800/PCS1900 @ 25 °C -109 dBm, Downlink RF level @ BER Class II < 2.4 % [5]	
• SIM Toolkit		
Function VOICE		
• HR / FR / EFR / AMR • Echo cancellation • Noise reduction		

[1] Device can be attached to both GPRS and GSM services (i.e. Packet Switch and Circuit Switch mode) using one service at a time.

[2] GPRS multi-slot class 10 implies a maximum of 4 slots in DL (reception) and 2 slots in UL (transmission) with 5 slots in total.

[3] The maximum bit rate of the module depends on the current network settings.

[4] These functionalities are supported via AT commands.

[5] Condition: 50 Ω output load

Descriptions and non-contractual illustrations in this document are given as an indication only.
ERCOGENER reserves the right to make any modification.

Interfaces
• Antenne GSM : Connector FAKRA-D
• Alimentation : +7.2 à +32 V_{DC} (Connector micro-FIT 4 points)
• 1 serial port RS232_0 (300 à 115200bds) Sub-D 9 points femelle
• 1 serial port RS232_1 (300 à 115200bds)
• 1 serial port RS232_2 (300 à 115200bds)
• Commandes AT : GSM 07.05 et 07.07
- SIM reader (SIM 3V – 1,8V)
• 3 Opto-couplées inputs • 2 Opto-couplées isolées inputs • 3 Collecteur OuGreen outputs • 2 analog inputs (0 – 10 Volts)
• External power supply V_{POWER} controllable (Micro-FIT 16-pin connector)
• Battery charge inhiber
• Buzzer output (Micro-FIT 14-pin connector)
• Backup battery
• 1 port ONE_WIRE
• power supply output V_{BAT}
• 3-axis accelerometer
• Audio

Options / Accessoires supplémentaires *	
• Bus CAN MCP2515	S0467B
• ONE WIRE Multi slaves	S0470B
• Double SIM card holder	S0471B
• 2 analog current inputs (4 – 20 mA)	S0475B
• 1 serial port RS485	S0520A
• Accessories: Antennas, cables, power supply... (consult our website)	

* These options are an addition or a replacement of some existing options, contact us. (See § **3.3.2 Functional architecture of serial ports**)

Descriptions and non-contractual illustrations in this document are given as an indication only.
ERCOGENER reserves the right to make any modification.

2.5 Environmental Climatiques

To ensure a correct functioning of the modem, the limits listed in the table below must be respected.

Table 3 : Environmental characteristics

Operating temperature range	
Battery charging	0 °C à +45 °C
Battery discharging	-20 °C à +45 °C
Storage temperature range	1 year of storage between -20°C to + 35°C 3 months of storage between -20°C to + 45°C 1 month of storage between -20°C to + 60°C
Relative humidity	65 ±20%
Atmospheric pressure	700 hPa à 1060 hPa (-400 m à 3000 m)

Above 45 °C inside the box, the protection of the battery management triggers. The battery will not be charged.

3 Interfaces

3.1 Front side

Figure 4 : Front side

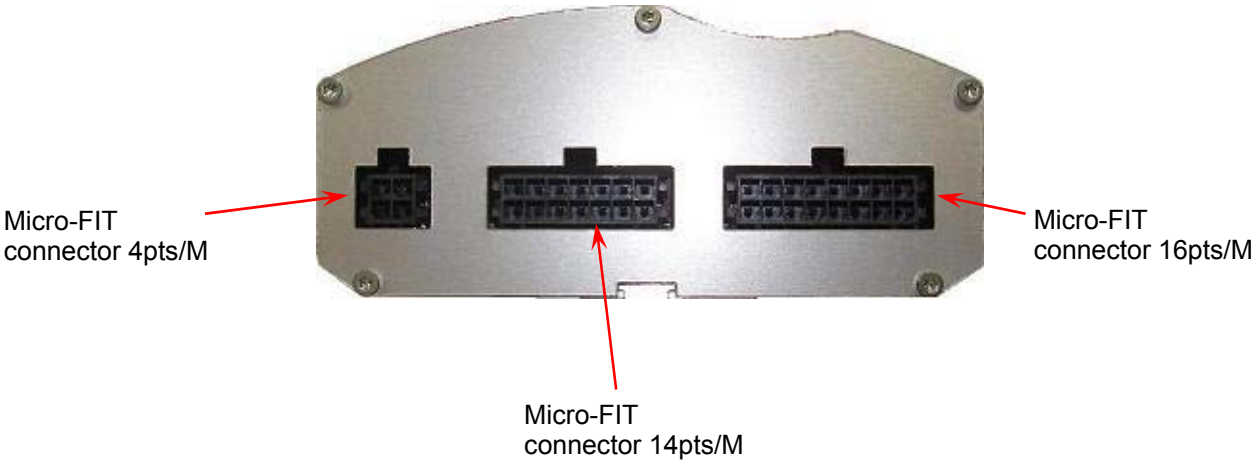

See ANNEX 1 – 4 pins Micro-FIT cable (Power), ANNEX 2 – 14 pins Micro-FIT cable (Inputs/Outputs), ANNEX 3 – 16 pins Micro-FIT cable (14 wires, Serial links) et ANNEX 4 - 16-pins Micro-FIT cable (16-wires, Serial link, Boot and Reset) for pin out of different connectors.

Table 4 : Front side connector

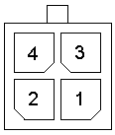

	Micro Fit 4 points
1	OUTPUT 1 (S1)
2	INPUT 1 (E1)
3	GND
4	$+V_{DC}$

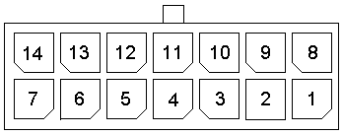

	Micro Fit 14 points
1	ONE_WIRE
2	ANA2
3	E5-
4	E5+
5	E4
6	S3
7	V_{BAT}
8	GND
9	ANA1
10	E3-
11	E3+
12	E2
13	S2
14	BUZZER

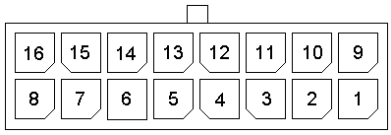

	Micro Fit 16 points
1	GND
2	TX_2
3	RX_2
4	GND
5	CTS_1
6	RTS_1
7	TX_1
8	RX_1
9	POWER_OUT
10	RESET
11	BOOT
12	GND
13	CTS_0
14	RTS_0
15	TX_0
16	RX_0

Descriptions and non-contractual illustrations in this document are given as an indication only.
ERCOGENER reserves the right to make any modification.

3.2 Back side

Figure 5 : Back side

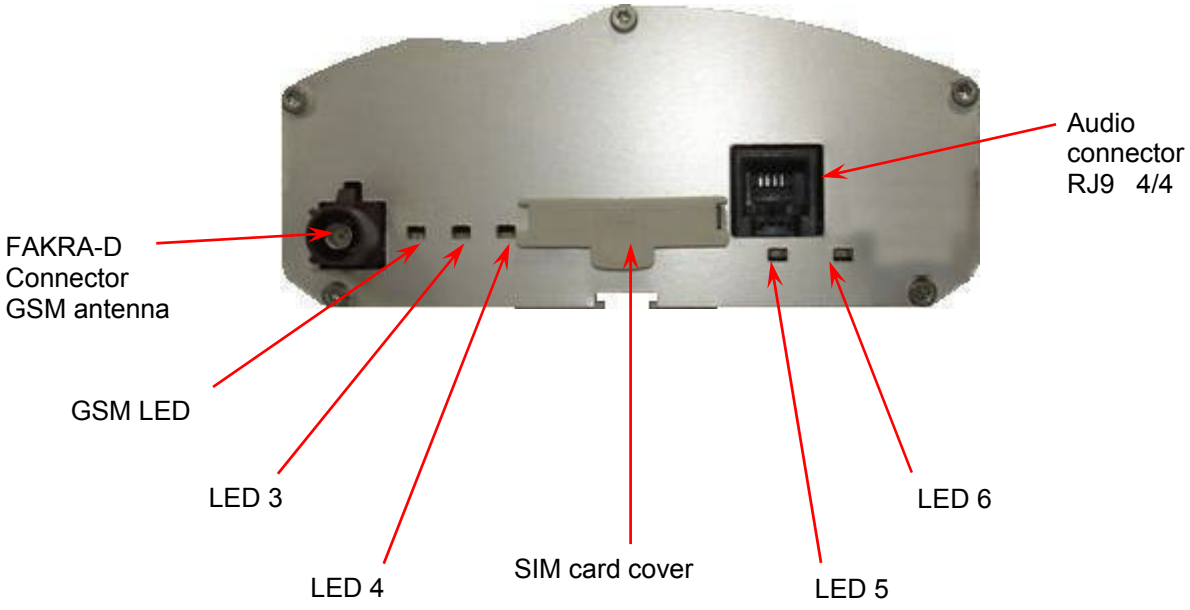

3.3 Functional description

3.3.1 General

Figure 6 : Functional architecture

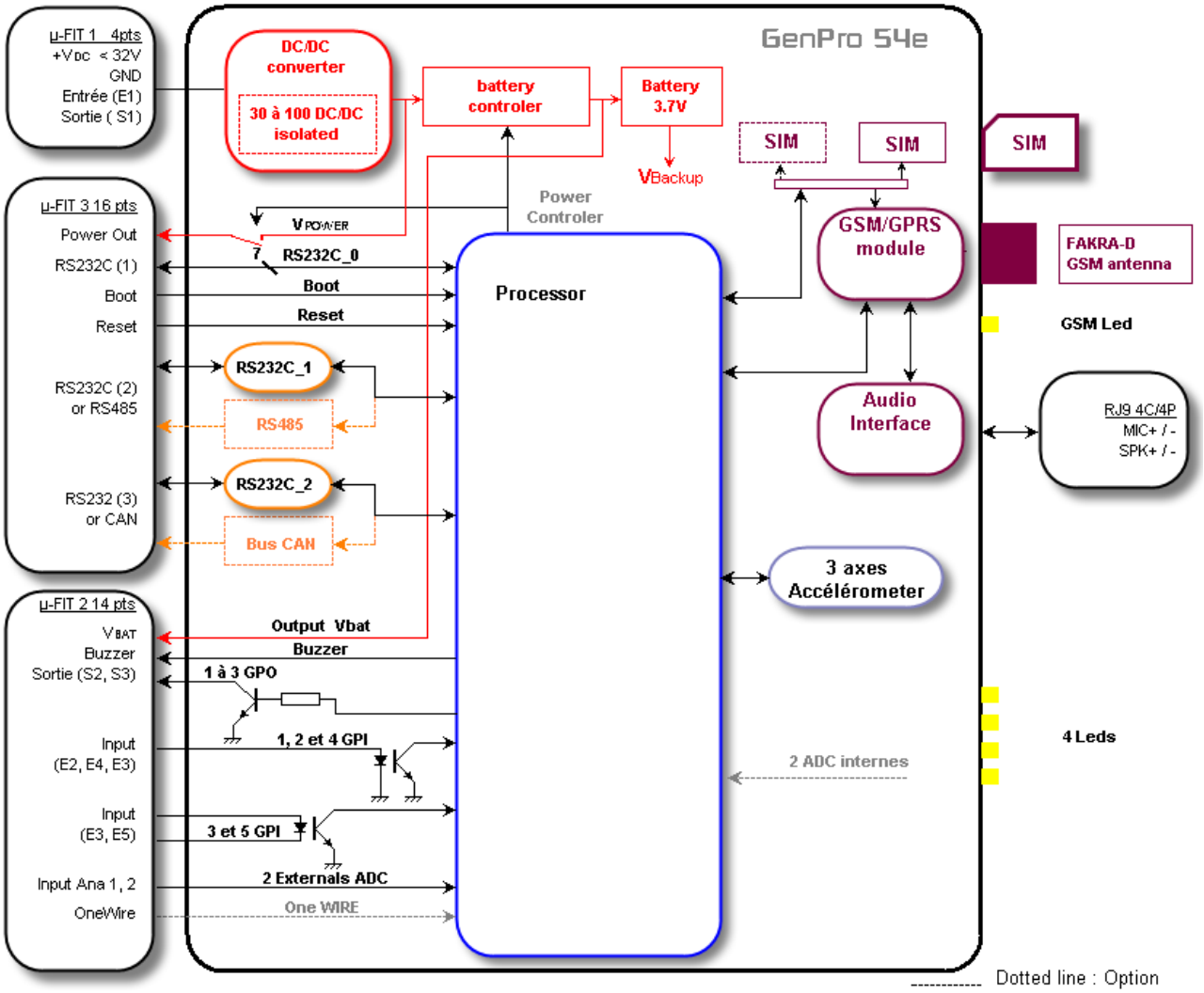

3.3.2 Functional architecture of serial ports

Contact us for the different option.

Figure 7 : Option functional serial ports

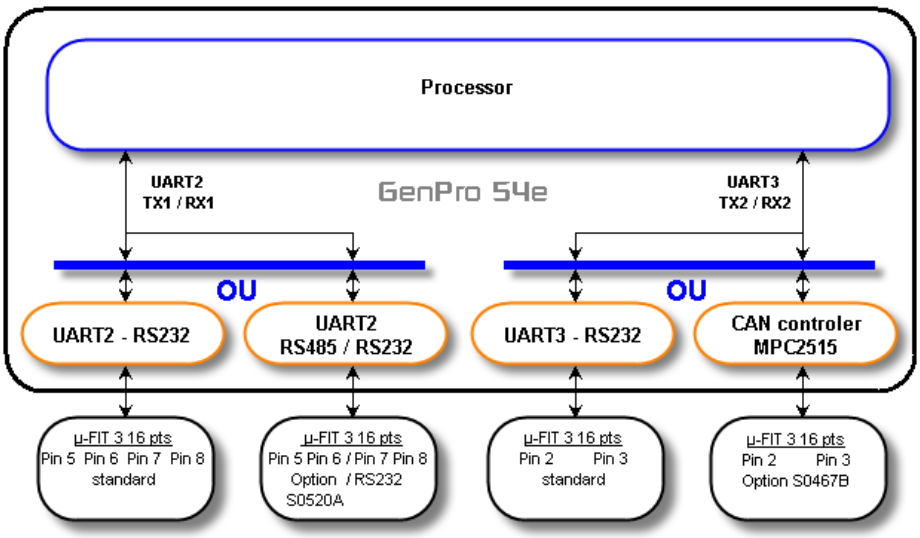

Descriptions and non-contractual illustrations in this document are given as an indication only.
ERCOGENER reserves the right to make any modification.

3.4 Power supply

When the battery is present, the act of removing the $+V_{DC}$ will not cut the modem. For this see § 5.2 Turning OFF the modem.

3.4.1 Power supply cable

Power is supplied with the cable provided with the equipment (reference ERCOGENER: 4402304215). (See ANNEX 1 – 4 pins Micro-FIT cable (Power))

The modem is protected by a F2 A / 32 V fuse directly assembled on the power supply cable supplied with the modem.

It is necessary to use the power supply cable delivered with the modem; otherwise the modem will not be protected.
Pins 1 and 2 are used for functions Input/Output. The modem's power can be achieved through pins 4 ($+V_{DC}$) and 3 (GND).

The modem must be powered by an external DC voltage (V+BATTERY) between +7.2V and +32V.

The regulation of the modem power supply is made with an internal DC/DC converter in order to supply all the necessary internal DC voltages.

The modem is also internally protected against voltage peaks of more than 32 V.

The following table describes the consequences of over-voltage or insufficient voltage on the modem.

3.4.2 Power supply 7.2 – 32V_{DC}

The following table describes the consequences of over-voltage or insufficient voltage on the modem.

Table 5 : Effects of power supply defect

	Then:
▪ Voltage falls below 7.2V	▪ The functioning and the GSM communication are not guaranteed when the remaining capacity of the battery is not sufficient.
▪ Voltage above 32V (Punctual peaks)	▪ The modem guarantees its own protection.
▪ Voltage above 32V (Continuous over-voltage)	▪ The modem is protected by the fuse mounted on the power supply cable.

Descriptions and non-contractual illustrations in this document are given as an indication only.
ERCOGENER reserves the right to make any modification.

3.4.2.1 Internal battery

The battery is fixed inside the GenPro 54e. It is connected to an additional charging circuit cabled on the motherboard of the GenPro 54e.

This battery allows to maintain the GenPro 54e functioning in case of absence of its external power supply (power supply connected on the Micro-FIT 4-pin female connector).

The internal charging circuit allows to keep permanently the charge of the battery from the external power supply.

When the battery is completely discharged, 4 h 30 mn are necessary to obtain a new complete charge. It is normal if the box is becoming a little bit hot in this case.

The autonomy of the battery essentially depends on the mode of use of the GenPro 54e (attachment in GSM/GPRS, Inputs/Outputs, RS232C connected...).

As an information, the autonomy is around:

- 1 h 45 mn with the following conditions GPRS communication 3Rx / 2TX, serial link not connected, no Input Output connected.
- 13 h with the following conditions GSM attached to GPRS network without data transfer, serial link not connected, no Input Output connected.

When the battery is connected and charged, it is not possible to do an ON/OFF of the device, only putting the Reset input (pin 10 of the 16-pin micro-FIT connector) to the ground or sending the command ***AT+EGMRST*** allows a reset of the modem.

When the temperature exceeds 45 °C inside the box, the protection of the battery management triggers. The battery will not be charged.

If the battery is present, prepare the modem for storage or transport conditions, in order to limit high discharges of the battery. For that, see § 5.2 Turning OFF the modem

Table 6 : Characteristics of the polymer lithium battery

Voltage (max.)	4.2V	
Type	Lithium Polymer (LiPolymer)	
Capacity	1000 mA/h typical	
Exp. cycle time	>300 cycles> 70% of the initial capacity	
Temperature range	Charge : 0°C to +45°C	Discharge : -20°C to +60°C
Protection (Resettable fuse)	Discharge voltage : 2.30V ±0.058V Maximum discharge current : 2A to 4A (1.0±0.3s)	

The battery cannot be replaced or modified by the user; the device must not be opened for any intervention on the battery: the device must be returned to the factory.
Do not throw the modem and the battery on the fire.

Descriptions and non-contractual illustrations in this document are given as an indication only.
ERCOGENER reserves the right to make any modification.

3.4.2.2 Consumption of the GenPro 54e

Table 7 : Power supply range

Power supply range	7.2 V_{DC} à 32V_{DC}

Table 8 : Consumption in Low Power mode @ 25 °C without battery charge

Low Power	$I_{MOY\ MAX.}$				**Unit.**
V_{IN}	**7.2**	**12**	**24**	**32**	**V**
	5.2	4	2.3	1.9	mA

The GenPro 54e is in Low Power mode with the command ***AT+EGLOP=1,xx***.

The Low Power mode is only with ***EasePro ≥ V2.20***.

Table 9 : Consumption in Network Attached @ 25 °C without battery charge

Mode attaché	$I_{MOY\ MAX.}$				**Unit.**
V_{IN}	**7.2**	**12**	**24**	**32**	**V**
GSM 900 / 1 800 MHz	65	60	25	20	mA
GPRS / EDGE	70	50	35	30	mA

The GenPro 54e is attached to the GSM network.

Table 10 : Consumption in transfer data mode @ 25 °C without battery charge

								Unit
V_{IN}				**7.2**	**12**	**24**	**32**	**V**
GSM		**900(1)**	$I_{MOY\ MAX}$	335	180	90	70	mA
			$I_{PIC\ MAX}$	1860	930	450	345	mA
		1 800(2)	$I_{MOY\ MAX}$	260	150	70	55	mA
			$I_{PIC\ MAX}$	1575	740	360	280	mA
GPRS	**4 Rx / 1 Tx**	**900(1)**	320	175	95	75	75	mA
			1895	910	440	340	340	mA
		1 800(2)	255	145	75	60	60	mA
			1575	735	360	280	280	mA
	3 Rx / 2 Tx	**900(1)**	465	255	130	105	105	mA
			1640	775	380	300	300	mA
		1 800(2)	370	210	110	85	85	mA
			1265	690	340	265	265	mA
EDGE	**4 Rx / 1 Tx**	**900(3)**	320	175	90	70	70	mA
			1855	905	440	345	345	mA
		1 800(4)	265	150	85	70	70	mA
			1550	750	370	290	290	mA
	3 Rx / 2 Tx	**900(3)**	470	255	130	100	100	mA
			1645	770	380	300	300	mA
		1 800(4)	385	215	115	90	90	mA
			1430	700	345	270	270	mA

Descriptions and non-contractual illustrations in this document are given as an indication only.
ERCOGENER reserves the right to make any modification.

(1) antenna adapted, RF power max. 33dBm.
(2) antenna adapted, RF power max. 30dBm.
(3) antenna adapted, RF power max. 27dBm.
(4) antenna adapted, RF power max. 26dBm.

Table 11 : Consumption of battery charge @ 25 °C

Charge batterie	$I_{MOY\ MAX.}$				Unit.
V_{IN}	7.2	12	24	32	V
	190	105	55	40	mA

3.4.2.3 Power Dimensioning

The graph below indicates the maximum peak current. The power supply must be able to supply this current during the GSM "***Burst***".

Figure 8 : Max consumption

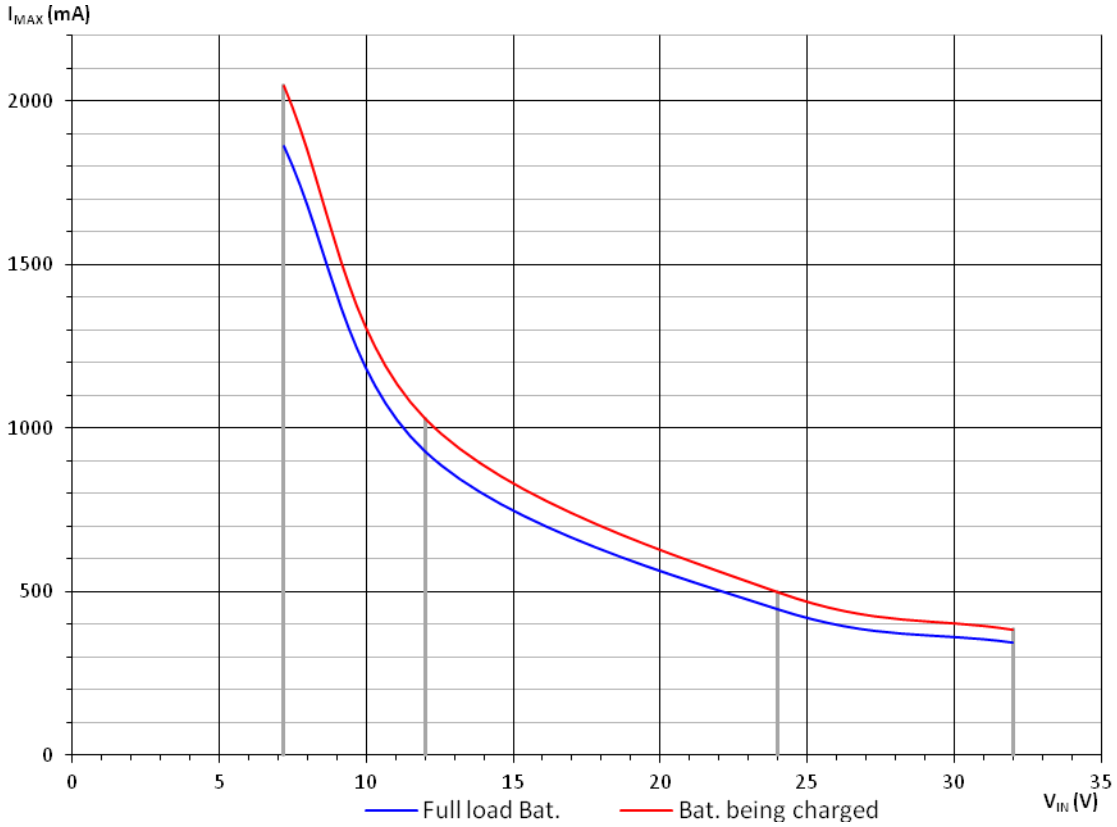

This consumption is not permanent. It corresponds to the consumption of burst at the GSM communications.

3.5 Bus One Wire

3.5.1 Bus One Wire

In standard One Wire Bus is managed by the processor and manages the type of readers "serial number" 64-bit read-only.

Table 12 : Description of the One Wire bus

Signal	Connector 14 pins Pin number	I/O	Type I/O	Description
Bus One Wire	1	I/O	Analog	Bus One Wire
GND	8			

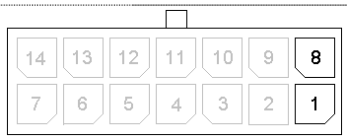

Wire color
White/green for Bus One Wire
Black for GND
see ANNEX 2 – 14 pins Micro-FIT cable (Inputs/Outputs)

Table 13 : Bus One Wire - Electrical characteristics

Characteristics	Symbols	Conditions	Min.	Typ.	Max.	Uni
Input Voltage – Low	V_{IL}		-0.3		0.8	V_{DC}
Input Voltage – High	V_{IH}		2		3.5	V_{DC}
Hystérésis Voltage	V_{Hys}		0.4		0.7	V_{DC}
Input Leakage Current	I_{LEAK}		-4		38	μA_{DC}
Input capacitance	C_{IN}				14	pF
Output Low-level Voltage	V_{OL}				0.4	V_{DC}
Output High-level Voltage	V_{OH}		2.8			V_{DC}
Output Current	I_o				±16	mA_{DC}

Figure 9 : Internal electrical scheme of the One Wire bus

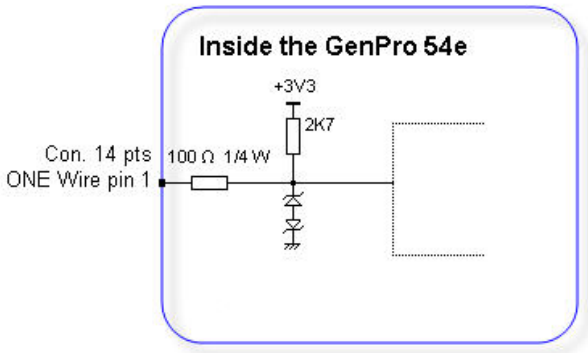

Assembly working with identification keys DS1990 i-button from the manufacturer MAXIM.

The integrator has the responsibility to protect the input from electrical perturbations and to respect the functioning parameters values.

3.5.2 Option Bus Multi 1- Wire S0470B

This option ***Multi 1-Wire*** specific ***S0470B*** allows you to read all 1-Wire devices with possibility to have multiple devices on the same bus.

This option Multi 1-wire can be used with ***EGM*** library.
Contact us for use with the ***EasePro*** application.

Table 14 : Description of the Multi 1- Wire bus

Signal	Connector 14 pins Pin number	I/O	Type I/O	Description
Bus One Wire	1	I/O	Analog	Bus Multi 1- Wire
GND	8			

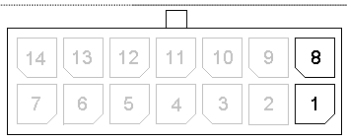

Wire color
White/green for Bus One Wire
Black for GND
see ANNEX 2 – 14 pins Micro-FIT cable (Inputs/Outputs)

Table 15 : Bus Multi 1- Wire - Characteristics électriques

Characteristics	Symbols	Conditions	Min.	Typ.	Max.	Uni
Input Voltage – Low	V_{IL}		-0.3		0.9	V_{DC}
Input Voltage – High	V_{IH}		1.9		3.3	V_{DC}
Input Leakage Current	I_{LEAK}		-10		10	μA_{DC}
Input capacitance	C_{IN}				10	pF
Output Low-level Voltage	V_{OL}	@ charge 4mA			0.4	V_{DC}
Output High-level Voltage	V_{OH}	@ charge 4mA	2.8		3.3	V_{DC}
Active Pullup On Time [4, 5]	t_{APUOT}		2.3	2.5	2.7	µs
Pulldown Slew Rate [6])	P_{DSRC}		1		4.2	V/µs
Pullup Slew Rate [6])	P_{USRC}		0.8		4	V/µs
Power-On Reset Trip Point	V_{POR}				2.2	V
Write-One/Read Low Time	t_{W1L}		7.6	8	8.4	µs
Read Sample Time	t_{MSR}		13.3	14	15	µs
1-Wire Time Slot	t_{SLOT}		65.8	69.3	72.8	µs
Fall Time High-to-Low [6, 7]	t_{F1}		0.54		3.0	µs
Write-Zero Low Time	t_{W0L}		60	64	68	µs
Write-Zero Recovery Time	t_{REC0}		5.0	5.3	5.6	µs
Reset Low Time	t_{RSTL}		570	600	630	µs
Presence-Detect Sample Time	t_{MSP}		66.5	70	73.5	µs
Sampling for Short and Interrupt	t_{SI}		7.6	8	8.4	µs
Reset High Time	t_{RSTH}		554.8	584	613.2	µs

[4] Active or resistive pullup choice is configurable.
[5] Except for t_{F1}, all 1-Wire timing specifications and t_{APUOT} are derived from the same timing circuit. Therefore, if one of these parameters is found to be off the typical value, it is safe to assume that all these parameters deviate from their typical value in the same direction and by the same degree.
[6] These values apply at full load, i.e., 1nF at standard speed and 0.3nF at overdrive speed. For reduced load, the pulldown slew rate is slightly faster.
[7] Fall time high-to-low (t_{F1}) is derived from P_{DSRC}, referenced from 2.97 V_{DC} to 0.33 V_{DC}.

See Figure 9 : Internal electrical scheme of the One Wire bus

3.6 Analog inputs ANA1 and ANA2

3.6.1 Analog input 0 – 10 V_{DC}

Table 16 : Description of the Analog input 0 – 10 V

Signal	Connector 14 pins Pin number	I/O	Type I/O	Description
ANA1 ANA2 GND	9 2 8	I	Analog	Analog input 0 – 10V

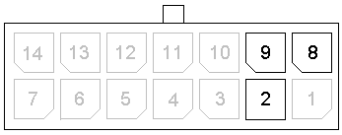

Wire color
Purple for ANA1
Grey for ANA2
Black for GND
see ANNEX 2 – 14 pins Micro-FIT cable (Inputs/Outputs)

Table 17 : Characteristics of the Analog input 0 – 10 V

Characteristics	Symbols	Conditions	Min.	Typ.	Max.	Uni
Analog input	ANA1 / 2		-0.3		12.8	V_{DC}
Conversion range			1.3 µ		10.33	V_{DC}
Polarization current		De 1.3 µV à 10.33 V	0.064		345	$µA_{DC}$
Resolution				10		bits
Linearity				±2		LSB

The integrator has the responsibility to protect the input from electrical perturbations and to respect the functioning parameters values.

Figure 10 : Internal electrical scheme of analog input 0 – 10 V

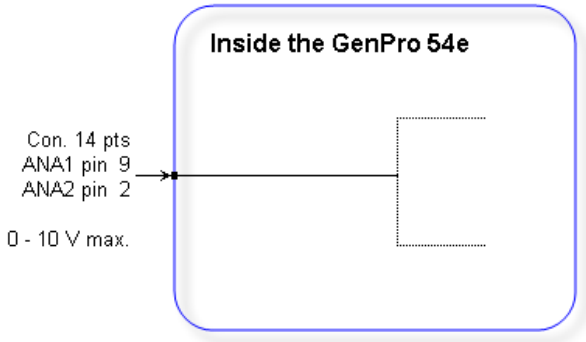

3.6.2 Option Analog inputs in current 4 – 20 mA S0475B

This option ***ANA 4-20mA*** specific ***S0475B*** allows current input.

Table 18 : Description of the Analog input 4 – 20 mA

Signal	Connector 14 pins Pin number	I/O	Type I/O	Description
ANA1 ANA2 GND	9 2 8	I	Analog	Analog input 4 – 20mA

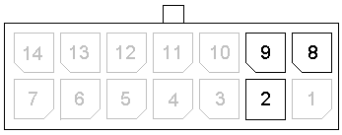

Wire color
Purple for ANA1
Grey for ANA2
Black for GND
see ANNEX 2 – 14 pins Micro-FIT cable (Inputs/Outputs)

Table 19 : Characteristics of analog inputs 4 – 20 mA

Characteristics	Symbols	Conditions	Min.	Typ.	Max.	Uni
Analog input	ANA1 / 2		-0.3		3.8	V_{DC}
Conversion range			0		22	mA_{DC}
Polarization current				20	200	nA_{DC}
Resolution				10		bits
Linearity				±2		LSB

The integrator has the responsibility to protect the input from electrical perturbations and to respect the functioning parameters values.

Figure 11 : Internal electrical scheme of analog input 4 – 20 mA

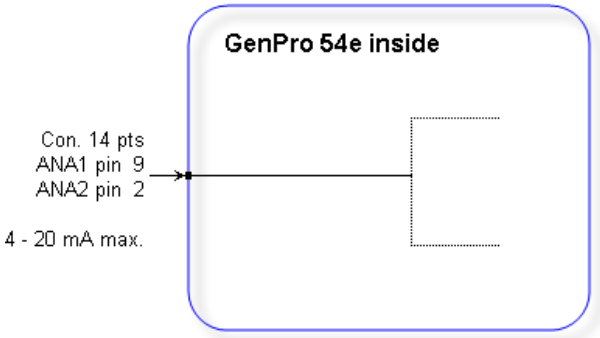

3.7 Opto-coupled inputs

Table 20 : Description of the digital opto-coupled inputs

Signal	Connector Pin number	I/O	Type I/O	Description
E1 GND E2 E4 GND	2 Connector 4 pins 3 Connector 4 pins 12 Connector 14 pins 5 Connector 14 pins 8 Connector 14 pins	I	Analog	Opto-coupled input 0 – 35 V
	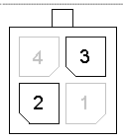	Wire color Yellow for E2 Black for GND see ANNEX 1 – 4 pins Micro-FIT cable (Power)		
	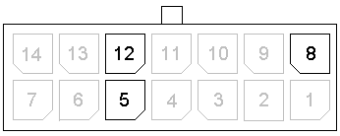	Wire color Brown for E2 Green for E4 Black for GND see ANNEX 2 – 14 pins Micro-FIT cable (Inputs/Outputs)		

Table 21 : Characteristics of opto-coupled inputs

Characteristics	Symbols	Conditions	Min.	Typ.	Max.	Uni
Courant max.	$I_{F\ (rms)}$				50	mA
Tension inverse max.	V_R				5	V
Tension directe	V_F	I_F = 10 mA	1.0	1.15	1.3	V
Courant inverse	I_R	V_R = 5 V			10	µA
Capacité	C_T	V=0, f = 1 MHz	---	30	---	pF
Ratio de transfert	I_C / I_F	I_F = 5 mA, V_{CE} = 5 V	50	---	600	%
Saturation du Ratio de transfert	I_C / $I_{F\ (SAT)}$	I_F = 1 mA, V_{CE} = 0.4 V		60		%
Tension de commande			3,5		35	V
Tension de repos					1	V

Figure 12 : Internal electrical scheme of opto-coupled inputs

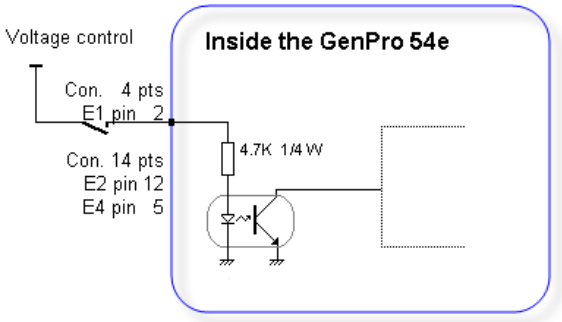

The minimum command voltage for the detection is: **3.5 V**

The maximum command voltage is: **35 V**

3.8 Opto-coupled inputs insulated

To allow all types of connection, the input E3 and E5 has no electrical reference with the card.

This allows more flexible control with respect to different configurations encountered.

Table 22 : Description of the opto-coupled insulated

Signal	Connector 14 pins Pin number	I/O	Type I/O	Description
E3+ E3- E5+ E5-	11 10 4 3	I	Analog	Opto-coupled input insulated 0 – 35 V
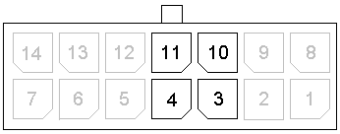	Wire color Yellow for E3+ Black for E3- Blue for E5+ Black for E5- see ANNEX 2 – 14 pins Micro-FIT cable (Inputs/Outputs)			

Table 23 : Characteristics des Entrées opto-couplées isolées

The electrical characteristics are the same as the ones in paragraph 3.7 Opto-coupled inputs.
See Table 21 : Characteristics of opto-coupled inputs

Figure 13 : Internal electrical scheme of insulated inputs

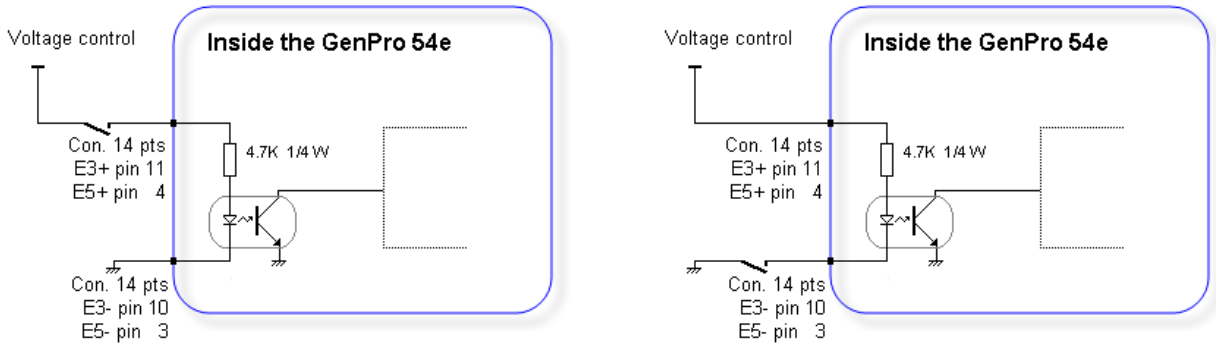

Control via the PLUS

Control by putting to the Ground

3.9 Outputs

Table 24 : Description of the open-collector output

Signal	Connector Pin number	I/O	Type I/O	Description
S1 S2 S3 GND	1 Connector 4 pins 13 Connector 14 pins 6 Connector 14 pins 8 Connector 14 pins	O	Logic	Open collector output
	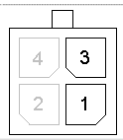	Wire color Brown for S2 Black for GND See ANNEX 1 – 4 pins Micro-FIT cable (Power)		
	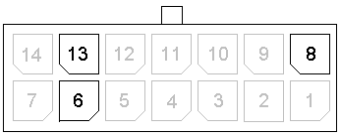	Wire color White/Brown for S2 White/Yellow for S3 Black for GND See ANNEX 2 – 14 pins Micro-FIT cable (Inputs/Outputs)		

Table 25 : Characteristics of open-collector output

Characteristics	Symbols	Conditions	Min.	Typ.	Max.	Uni
Max. voltage	V_{CE0}	Open transmitter			48	V_{DC}
Max. voltage	V_{CES}	V_{BE} = 0 V			48	V_{DC}
Collector current	I_C				0.5	A_{DC}
Saturation voltage	V_{CEsat}	I_C = 500 mA			1.3	V_{DC}
Dissipation	P_{Ttot}	$T_{amb} \leq 25$ °C, T_j = 110 °C			0.78	W

Figure 14 : Internal electric scheme of the output

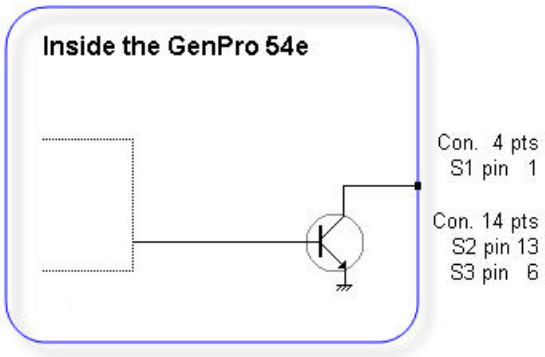

No protection is provided. The user must respect the values of the table above.

Figure 15 : Example of relay control

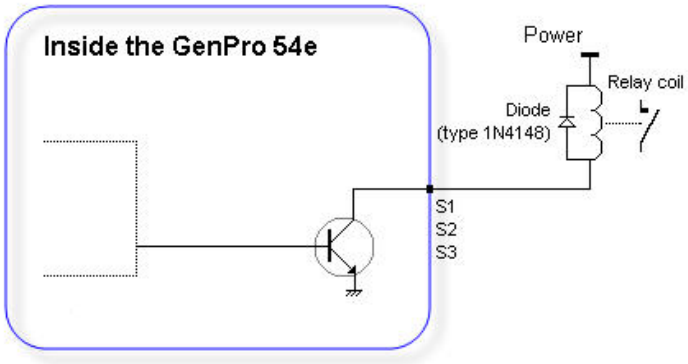

3.10 Power supply V_{BAT}

Table 26 : Description of power supply V_{BAT}

Signal	Connector 14 pins Pin number	I/O	Type I/O	Description
V_{BAT} GND	7 8	O	Analog	Voltage output 3.45 $V_{DC} \leq V_{BAT} \leq 4.5\ V_{DC}$.
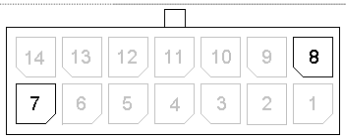	Wire color Orange for V_{BAT} Black for GND See ANNEX 2 – 14 pins Micro-FIT cable (Inputs/Outputs)			

Table 27 : Conditions of use of the output power supply V_{BAT}

Parameters	Condition	Min.	Typ.	Max.	Unit
V_{BAT}	Without Input power [1]	3.45		4.0	V_{DC}
	With Input power 7.2V - 32V	4.2		4.4	V_{DC}
I_{OUT}	Max.			100 [2]	mA_{DC}

[1] The GenPro 54e works with its battery only. In the case where the voltage V_{BAT} falls below 3.45V, the product cannot communicate anymore via the network.

[2] In the case where the software management of the battery guarantees that the voltage V_{BAT} does not fall below 3.45V. In case of low battery (V_{BAT} < 3.45V) or high discharge (V_{BAT} = 2.8V), and in order to guarantee a restart of the product, the consumption on this output must not exceed 50 mA.

2.8V is the self-protection limit of the battery. From this moment, the battery puts itself under protection, and the output voltage V_{BAT} becomes null.
When the battery is not connected, the output voltage is 4.2V ≤ V_{BAT} ≤ 4.4 V as long as the power supply $+V_{DC}$ is present;

3.11 Buzzer

By default, the GenPro 54e provides a Buzzer output on the output 14 of the 14-pin connector. This PWM output type provides a frequency, it is dedicated to drive a **Transducer**.

Table 28 : Description Sortie buzzer

Signal	Connector 14 pins Pin number	I/O	Type I/O	Description
BUZZER GND	14 8	O	Analog	Buzzer output

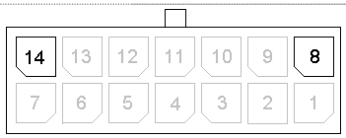

Wire color
Red for BUZZER
Black for GND
See ANNEX 2 – 14 pins Micro-FIT cable (Inputs/Outputs)

Table 29 : Characteristics of buzzer output

Characteristics	Symbols	Conditions	Min.	Typ.	Max.	Uni
collector-base voltage	V_{CB0}	Emetteur ouGreen			48	V_{DC}
collector-emitter voltage	V_{CE0}	Open base			40	V_{DC}
collector current (DC)	I_C				600	mA_{DC}
peak collector current	I_{CM}				800	mA_{DC}
Collector Cutoff Current	I_{CB0}	IE = 0; VCB = 60 V; Tj = 25 °C			10	nA_{DC}
		IE = 0; VCB = 60 V; Tj = 125 °C			10	μA_{DC}
collector-emitter saturation voltage	V_{CEsat}	IC = 150 mA; IB = 15 mA *			300	mV_{DC}
		IC = 500 mA; IB = 50 mA *			1	V_{DC}
transition frequency	f_T	IC = 20 mA; VCE = 20 V; f = 100 MHz			300	MHz
collector capacitance	C_C	$I_E = I_e = 0$; VCB = 10 V; f = 1 MHz			8	pF
total power dissipation	P_{Ttot}	$T_{amb} \leq 25$ °C			225	mW

* Pulse test: tp ≤ 300 µs; δ ≤ 0.02.

Table 30 : Example of transducer tested with the GenPro 54e

Characteristics Buzzer	Values
Type	Transducer AT-2720-T-R
Consumptions	1-30V peak/3.5mA max.
Resonance frequency	2.048Hz ±500HZ
Sound pressure level (SPL)	Min.88dBA @10cm

Figure 16 : Example of transducer tested with the GenPro 54e

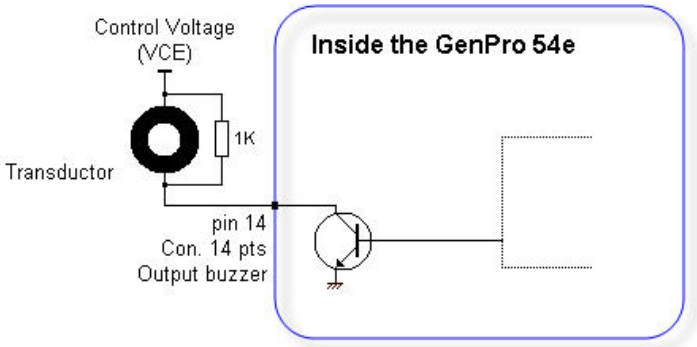

3.12 Serial link RS232_0

Table 31 : Description of pins of serial link RS232_0

Signal	Connector Micro FIT 16 points Pin number	I/O	Norme RS232	Description	Connector Sub D 9 points Pin number
CT103 / TX_0	15	I	TX	Transmit serial data	3
CT104 / RX_0	16	O	RX	Receive serial data	2
CT105 / RTS_0	14	I	RTS	Request To Send	7
CT106 / CTS_0	13	O	CTS	Clear To Send	8
GND	12			Ground	5

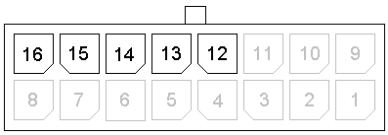

Wire color
Green for TX
Blue for RX
Yellow for RTS
Brown for CTS
Black for GND
See ANNEX 3 – 16 pins Micro-FIT cable (14 wires, Serial links)

Table 32 : Characteristics of serial link RS232_0

Characteristics	Symbols	Conditions	Min.	Typ.	Max.	Unit
Input Voltage – Range	V_{INPUT}	Input Voltage – Range	-25		+25	V_{DC}
Input Voltage – Low	V_{IL}	Input Voltage – Low	0.6	1.1		V_{DC}
Input Voltage – High	V_{IH}	Input Voltage – High		1.5	24	V_{DC}
Input Hysteresis	V_{Hys}	Input Hysteresis		0.5		V_{DC}
Input Resistance	R_{in}	Input Resistance	3	5	7	KΩ
Output Voltage	V_{OUT}	All transmitter outputs loaded with 3 kΩ to ground	±5	±5.4		V_{DC}
Transmitter Output Resistance	R_{OUT}		300	50k		Ω
RS-232 Output Short-Circuit Current	I_{CC}				±60	mA

Figure 17 : Normalized signals of the serial link RS232_0

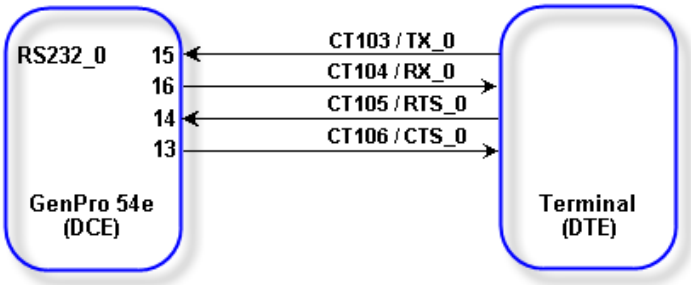

3.13 Serial link RS232_1 / RS485

3.13.1 Serial Link RS232_1 standard

Table 33 : Description of pins of serial link RS232_1

Signal	Connector Micro FIT 16 points Pin number	I/O	Norme RS232	Description
CT103 / TX_1	7	I	TX	Transmit serial data
CT104 / RX_1	8	O	RX	Receive serial data
CT105 / RTS_1	6	I	RTS	Request To Send
CT106 / CTS_1	5	O	CTS	Clear To Send
GND	4			Ground

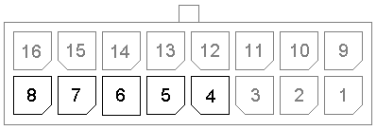

Wire color
White/green for TX
White/Blue for RX
White/Yellow for RTS
White/Brown for CTS
Black for GND
See ANNEX 3 – 16 pins Micro-FIT cable (14 wires, Serial links)

Table 34 : Characteristics of serial link RS232_1

Characteristics	Symbols	Conditions	Min.	Typ.	Max.	Uni
See Table 32 : Characteristics of serial link RS232_0						

Figure 18 : Normalized signals of serial link standard RS232_1

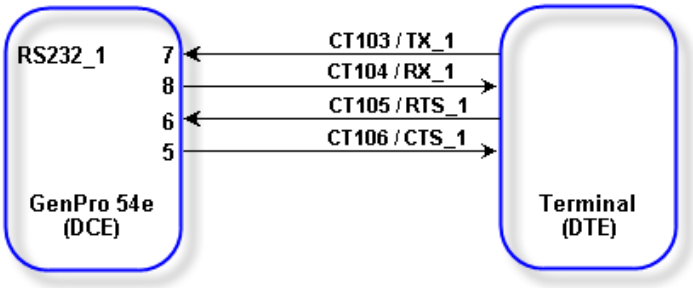

When the S0520A option (RS485) is present the RTS and CTS signals are not available.

Figure 19 : Normalized signals of serial link standard RS232_1 with S0520A option

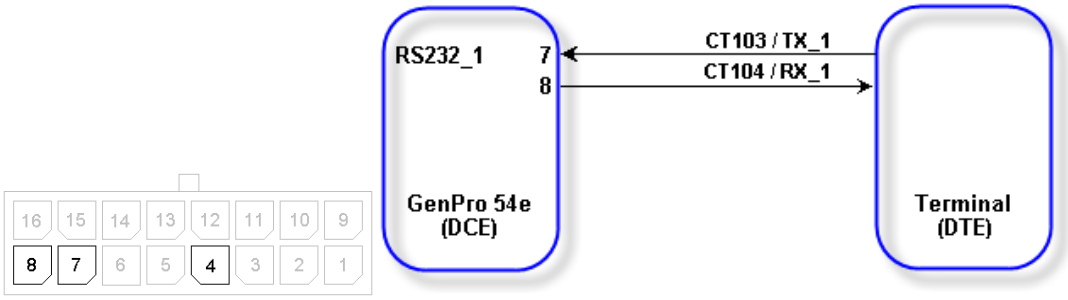

3.13.2 RS485 option S0520A

Table 35 : Description of pins of serial link RS485 option S0520A

Signal	Connector Micro FIT 16 points Pin number	I/O	Norme RS485	Description
A+	6	I/O	A/Y	I/O no inverted
B-	5	I/O	B/Z	I/O inverted
GND	4			Ground

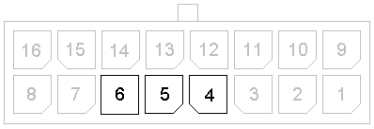

Wire color
White /Yellow for A+
White/Brown for B-
Black for GND
See ANNEX 3 – 16 pins Micro-FIT cable (14 wires, Serial links)

Tableau 36 : Characteristics of serial link RS485 option S0520A

Characteristics	Symbols	Conditions	Min.	Typ.	Max.	Unit
Interface voltage (A or B)	V_{IO}		-8		13	V_{DC}
Differential Voltage (A or B)	ΔV_{IO}		-5		+5	V_{DC}
Driver						
Differential Output Voltage	V_{OD}		1,5	2,2	3	V_{DC}
Differential Output Voltage for Complementary Output States	ΔV_{OD}				0,2	V_{DC}
Driver Common Mode Output	V_{OC}			2	3	V_{DC}
Common Mode Output Voltage for Complementary Output States	ΔV_{OC}				0,2	V_{DC}
Short-Circuit Current	I_{OSD}	–7V ≤ (A or B) ≤ 12V			±250	mA
Receiver						
Input Current (A, B)	I_{IN}	–7V ≤ (V_{IN}) ≤ 12V	-100		125	µA
Differential Input Threshold Voltage	V_{TH}	–7V ≤ (V_{IN}) ≤ 12V			±0,2	V_{DC}
Input Hysteresis	ΔV_{TH}	B = 0V		15		mV_{DC}
Output High Voltage	V_{OH}	I_O = –4mA, A-B = 200mV		2,4		V_{DC}
Output Low Voltage	V_{OL}	I_O = –4mA, A-B = 200mV			0,4	V_{DC}

Figure 20 : Length of Serial Link RS485 cable option S0520A

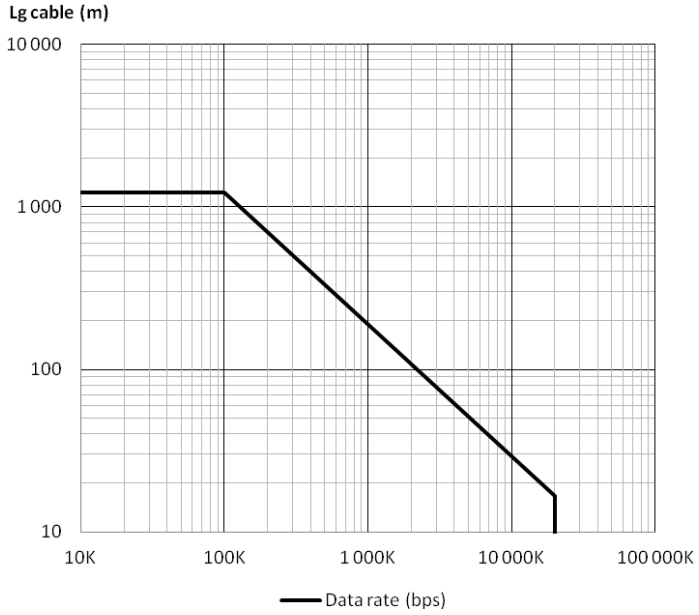

Figure 21 : Normalized signals of serial link RS485 option S0520A

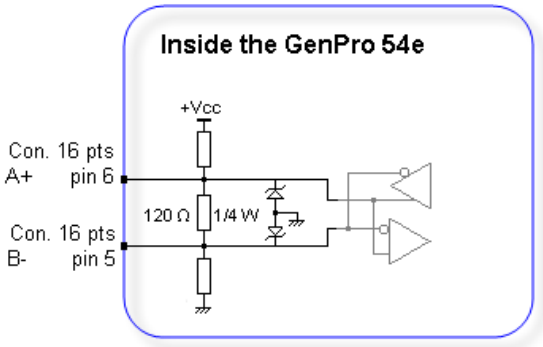

3.14 Serial link RS232_2 / Bus CAN

The third serial link is:

- RS232C - ***standard***.
- CAN Bus - Option ***MCP2515 CAN Bus***, specific ***S0467B***.

These two options cannot be implemented simultaneously.

3.14.1 Lien série RS232_2 standard

Table 37 : Description of pins of serial link RS232_2

Signal	Connector Micro FIT 16 points Pin number	I/O	Norme RS232	Description
CT103 / TX_2	2	I	TX	Transmit serial data
CT104 / RX_2	3	O	RX	Receive serial data
GND	1			Ground

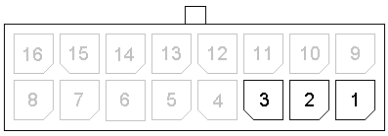

Wire color
Purple for TX
White/Purple for RX
Black for GND
See ANNEX 3 – 16 pins Micro-FIT cable (14 wires, Serial links)

Table 38 : Characteristics of serial link RS232_2

Characteristics	Symbols	Conditions	Min.	Typ.	Max.	Uni
See Table 32 : Characteristics of serial link RS232_0						

Figure 22 : Normalized signals of serial link RS232_2

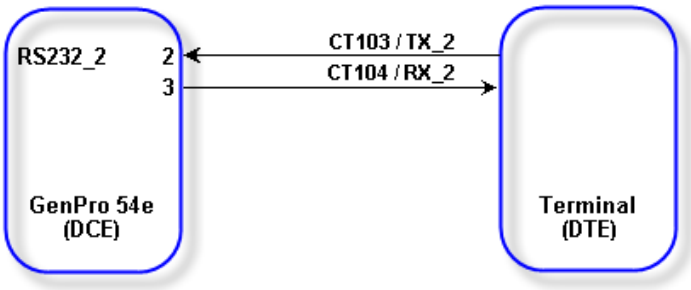

3.14.2 Bus CAN MCP2515 option S0467B

The data transmission is performed on a differential pair wire. The line is made up of two wire.

Table 39 : Description of serial link CAN MCP2515 option S0467B

Signal	Connector Micro FIT 16 points Pin number	I/O	Norme CAN	Description
CANH	2	I/O	CAN High	Positive differential line
CANL	3	I/O	CAN Low	Negative differential line
GND	1			Ground

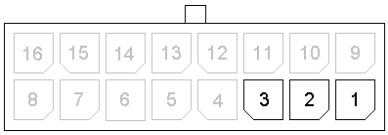

Wire color
Purple for CANH
White/Purple for CANL
Black for GND
See ANNEX 3 – 16 pins Micro-FIT cable (14 wires, Serial links)

Table 40 : Characteristics du lien série Bus CAN MCP2515 option S0467B

Characteristics	Symbols	Conditions	Min.	Typ.	Max.	Uni
Input Voltage – Low	V_{IL}	Input Voltage – Low	0.6	1.1		V_{DC}
Input Voltage – High	V_{IH}	Input Voltage – High		1.5	3.3	V_{DC}
Input Hysteresis	V_{Hys}	Input Hysteresis		0.1		V_{DC}
Leak current	I_L		±30			µA
Output Short-Circuit Current	I_{OS}				±250	mA
Output voltage	V_{OH}	CANH Dominant	2.45		3.3	V_{DC}
		CANL Dominant	0.5		1.25	V_{DC}
	V_{OL}	CANH Recessive		2.3		V_{DC}
		CANL Recessive		2.3		V_{DC}

Figure 23 : Output signal of serial link CAN MCP2515 option S0467B

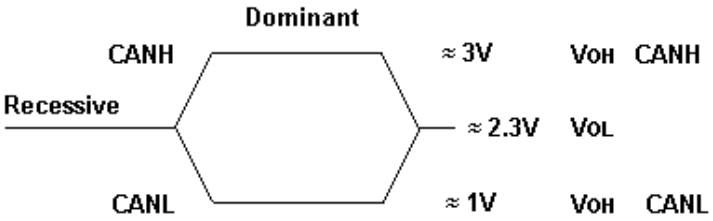

Figure 24 : Normalized signals of serial link CAN MCP2515 option S0467B

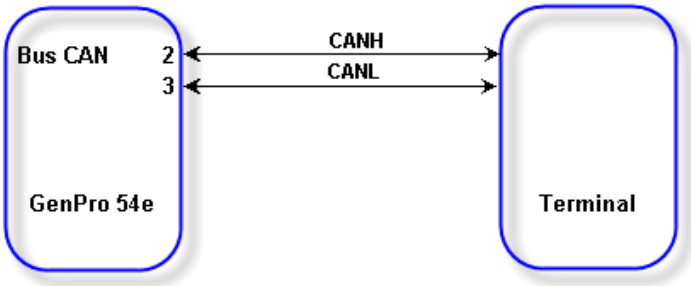

3.15 Power supply Power_Out

This Power_Out is controllable by software.

Table 41 : Description of Power_Out

Signal	Connector 16 pins Pin number	I/O	Type I/O	Description
Power_Out GND	9 12	O	Analog	
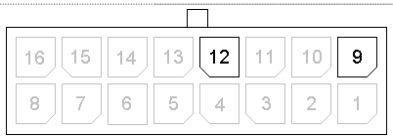		Wire color White Black See ANNEX 3 – 16 pins Micro-FIT cable (14 wires, Serial links)	Power_Out for GND	

Table 42 : Characteristics of Power_Out

Parameters	Condition	Min.	Typ.	Max.	Unit
V_{OUT}	With power 7.2V - 32V @ 1A	6.2		30.5	V_{DC}
R_{OUT}			45	70	mΩ
I_{OUT}				1	A

Figure 25 : Internal electrical scheme of the Power_Out

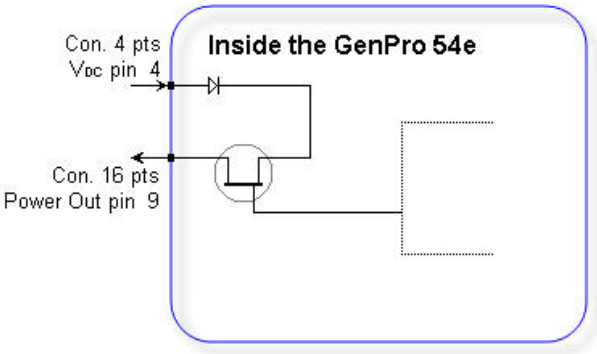

Below the graph of voltage drop due to the serial diode and the transistor.

Figure 26 : Drop of voltage

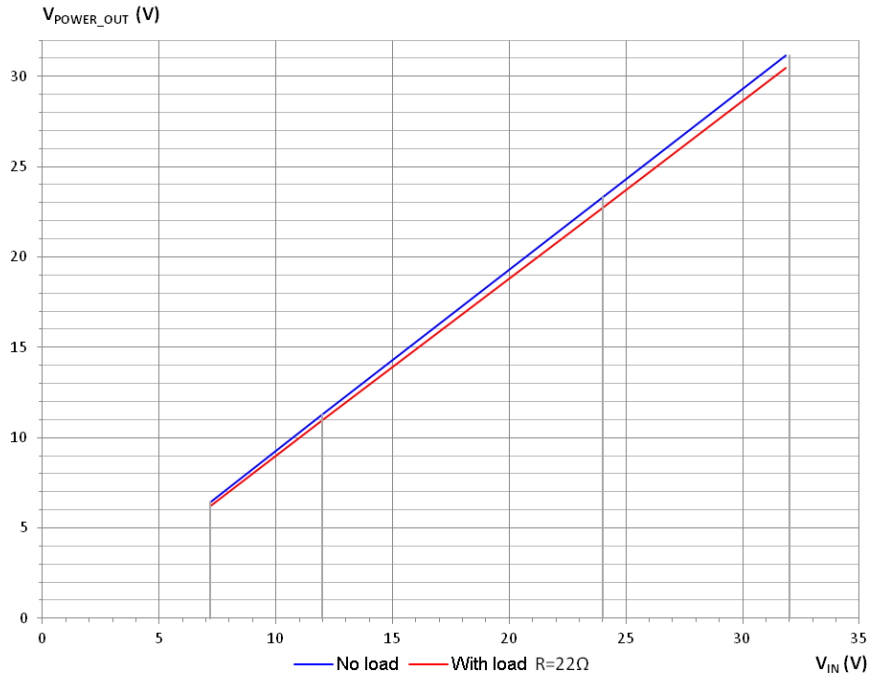

3.16 BOOT signal

This signal must NOT be connected, NOT used. Its use is strictly reserved for the manufacturer and distributors.

Table 43 : Description de l'entrée BOOT

Signal	Connector 16 pins Pin number	I/O	Type I/O	Description
BOOT GND	11 4	I	SCHMITT	Boot modem

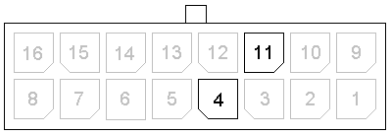

Wire color
Green for BOOT
Black for GND
See ANNEX 4 - 16-pins Micro-FIT cable (16-wires, Serial link, Boot and Reset)

Table 44 : Use condition of BOOT signal

Parameters	Conditions	Min.	Typ.	Max.	Uni
V_{IL}	Input Voltage – Low	-0.3		0.8	V_{DC}
V_{IH}	Input Voltage – High	2		3.3	V_{DC}
R_{IPU}	Internal Pull-Up Resistor		5.38K		Ω

Figure 27 : Wiring scheme of BOOT signal

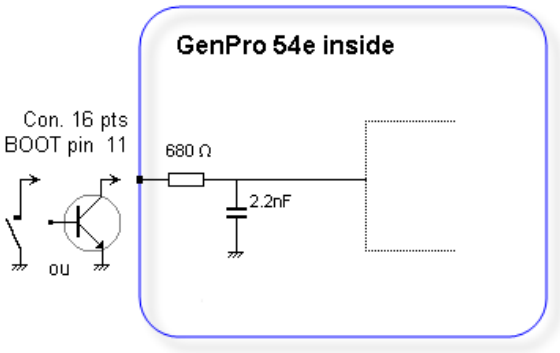

The use of the BOOT signal must pass through a transistor assembly or a logic contact.
The integrator has the responsibility to protect the input from electrical perturbations and to respect the functioning parameters values.

3.17 RESET signal

This signal must be used only in case of emergency RESET. A software RESET is always preferable to a Hardware RESET. It is strongly unadvised to execute this function whilst in communication or dialog, without having previously detached it from the operator network. Using the RESET does not restore the factory parameters.

Table 45 : Description of the RESET signal pin

Signal	Connector 16 pins Pin number	I/O	Type I/O	Description
RESET GND	10 4	I	SCHMITT	Reset modem

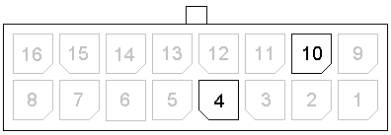

Wire color
Orange for RESET
Black for GND
See ANNEX 4 - 16-pins Micro-FIT cable (16-wires, Serial link, Boot and Reset)

Table 46 : Use condition of RESET signal

Parameters	Conditions	Min.	Typ.	Max.	Uni
V_{IL}	Input Voltage – Low	-0.3		0.8	V_{DC}
V_{IH}	Input Voltage – High	2		3.3	V_{DC}
R_{IPU}	Internal Pull-Up Resistor		5.38K		Ω

Figure 28 : Wiring scheme of RESET signal

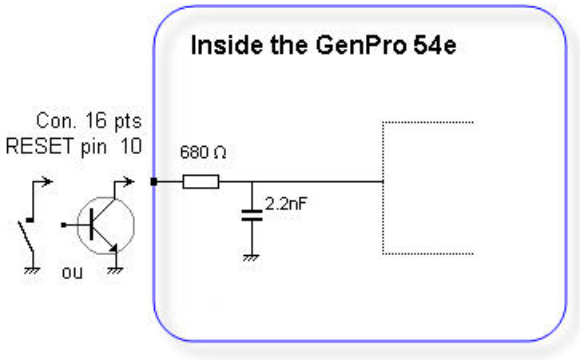

The use of the RESET signal must pass through a transistor assembly or a logic contact. The integrator has the responsibility to protect the input from electrical perturbations and to respect the functioning parameters values.

Figure 29 : Chronogram of RESET signal

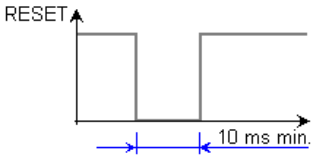

3.18 Accelerometer

The GenPro 54e provides an accelerometer with 3 axis of sensitivity ±2G or ±8G controllable by software.

Figure 30 : positioning of the accelerometer axis

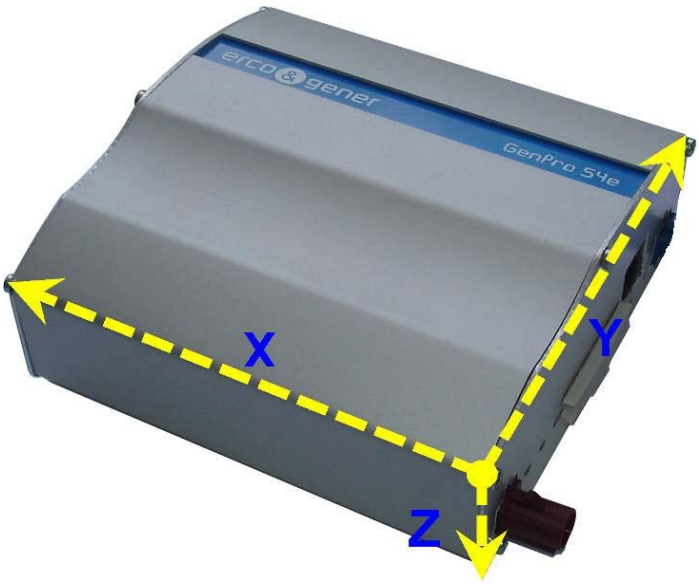

3.19 SIM card reader

Table 47 : Characteristics of the SIM card reader

Carte SIM	3 V ou 1.8 V

3.20 Dual SIM card reader

As an option it is possible to have a 2nd SIM reader.

- Option ***DUAL SIM*** reference ***S0471B***.

This SIM card is internal only.
The access can be done after removing the rear panel.
See Information Note EG_GenLocPro54e_1040_IN000_xxx_yy.

Table 48 : Characteristics of the 2nd SIM card reader

Carte SIM	3 V ou 1.8 V

3.21 Led of the modem

Figure 31 : Leds of Back side

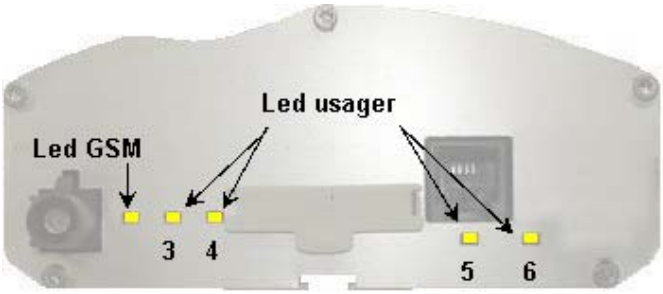

3.21.1 GSM led of the modem

3.21.1.1 Without application

The GenPro 54e contains the standard library. The led is OFF.

3.21.1.2 With standard library

The GenPro 54e contains the standard library. The Led is OFF.

3.21.1.3 The application ERCOGENER EasePro_Vx

The status of the GSM module is indicated by the status of the YELLOW GSM LED situated on the back side of the modem. This is the yellow LED situated on the left.

Table 49 : Status of GSM LED

Status of GSM LED	LED activity	GSM status
OFF	LED OFF	The module is not activated or OFF.
ON	LED permanent	The module is attaching to GSM network.
LED flashing	0.5s ON / 1.5s OFF	The module is attached to the GSM network.
LED flashing	0.2s ON / 0.6s OFF	The module is in communication data, voice or GPRS.

3.21.1.4 Owner application

The GenPro 54e contains your application. The led status depends on your parameters.

Descriptions and non-contractual illustrations in this document are given as an indication only.
ERCOGENER reserves the right to make any modification.

3.21.2 Led usager

These Leds are free. They are left at the disposal of the user.

If the GenPro 54e has the standard EGM library (see the documents "EG_EGM_CL_xxx_yy" of ERCOGENER), they can be controlled via AT command.

	n	AT+GPIOEXTSET=n,1	AT+GPIOEXTSET=n,0
Led 3	57	Led ON	Led OFF
Led 4	56		
Led 5	55		
Led 6	54		

Example AT+GPIOEXTSET=56,1 to turn ON the Led 4
AT+GPIOEXTSET=56,0 to turn OFF the Led4

Descriptions and non-contractual illustrations in this document are given as an indication only.
ERCOGENER reserves the right to make any modification.

3.22 Interface AUDIO

3.22.1 Microphone inputs

The microphone input is designed for a direct connection of the electret condenser of the micro. (For more details, see the command AT+USPM).

By default, the microphone input is active (pins MIC+, MIC-)
MIC- is Internaly connected to the **0V**.

Table 50 : Description of Microphone inputs

Signal	Connector 16 pins Pin number	I/O	Type I/O	Description
MIC- MIC+	1 4	I	Analog	Negative input **0V** Positive input

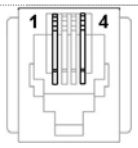

Table 51 : Characteristics of polarization for Microphone

Micro Input	Parameters/Conditions	Min	Typ	Max	Units
Microphone supply open circuit voltage output	Provided by MIC+ with MIC-.		2.2		V
Microphone supply current				2	mA
Microphone supply output resistance		2.85	3	3.15	kΩ
Microphone ground	MIC-		0		V

Table 52 : Dynamic characteristics for Microphone

Micro Input	Parameter/Conditions	Min	Typ	Max	Units
Maximum Input Level Range	Full scale single-ended voltage. Signal applied to MIC+ with MIC- as reference.			1.03	V_{PP}
Input Impedance Mic(+) to Mic(-)	At 1 kHz. Impedance between MIC+ and MIC-.		1.5		kΩ
Internal discrete high-pass -3dB cutoff frequency	Differential MIC		70		Hz

Figure 32 : Wiring scheme of microphone input

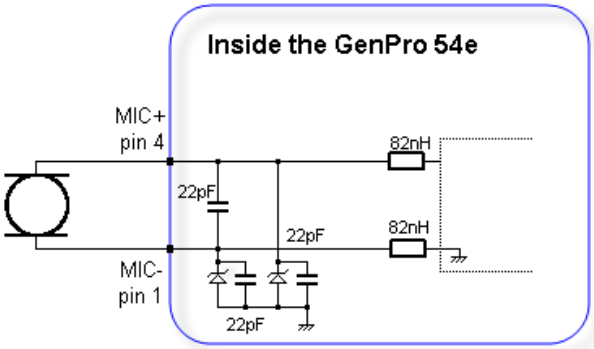

3.22.2 Loudspeaker output (Speaker)

By default, the loudspeaker output is not active.
For more details, see the command AT+USPM.
If the feature is not in use the pins 42 and 43 (SPK-SPK +) should not be connected.

Table 53 : Description of loudspeaker outputs

Signal	Connector 16 pins Pin number	I/O	Type I/O	Description
SPK- SPK+	2 3	O	Analog	Negative output Positive output

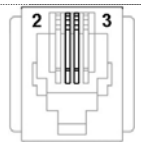

Table 54 : Characteristics of loudspeaker output

Speaker Output	Parameters/Conditions	Min	Typ	Max	Units
Maximum differential output voltage	Overdrive Gain stage = +9 dB		7.8		V_{PP}
Common mode output voltage			1.6		V
Output load resistance			8		Ω
Single-ended output load capacitance				10	nF
Inductive load				400	µH
Signal to noise	Load = 16 Ω, Gain stage = +0 dB, Input signal = 0 dBFS, Code 0, A-weighted	70	80		dB
Signal to distortion (THD)	Load = 8 Ω, 350 mW	50			dB
Power supply rejection	1 kHz	60			dB

Figure 33 : Wiring scheme of speaker output

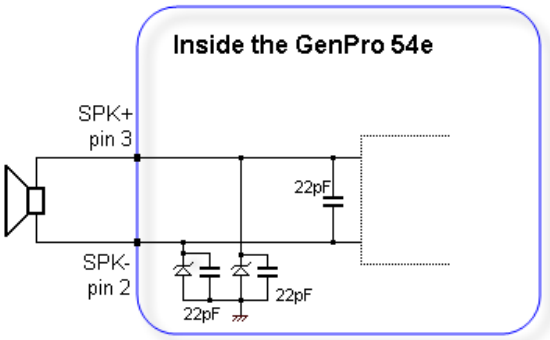

4 GSM

4.1 GSM external antenna

The GSM external antenna is connected to the modem via the FAKRA-D connector.

The external antenna must have the characteristics described in the table below.

Figure 34 : GSM external antenna

Table 55 : Characteristics of the GSM external antenna

Frequency band		
GSM 900	880..960 MHz	
GSM 1800	1710..1880 MHz	
GSM 850	824..894 MHz	
GSM 1900	1850..1990 MHz	
Impedance	50 Ohms nominal	
Input power	> 2 W peak	
Gain	< 3 dBi	
VSWR	< 2:1 recommended	< 3:1 acceptable
Return Loss	S_{11}<-10 dB recommended	S_{11}<-6 dB acceptable

See § 5.9 Recommended accessories, for the GSM antennas recommended by ERCOGENER.

5 Use of the modem

In the following examples, the listed commands correspond to the EGM standard library.

(See the documents "EG_EGM_CL_xxx_yy" of ERCOGENER)

5.1 Specific recommendations for the use of the modem in vehicles

The power supply connector of the modem GenPro 54e must NEVER be connected directly to the battery of the vehicle.

5.1.1 Recommended connection on the battery of a truck

All trucks have a circuit breaker outside the cabin. The circuit breaker is used for security reasons:

The circuit breaker is connected to the ground of the truck, usually connected to the fuse box.

Most of truck circuit breakers do not cut the **+** '**PLUS**' of the battery, but cut its '**GROUND**'.

Figure 35 : Recommended connection on the battery of a truck

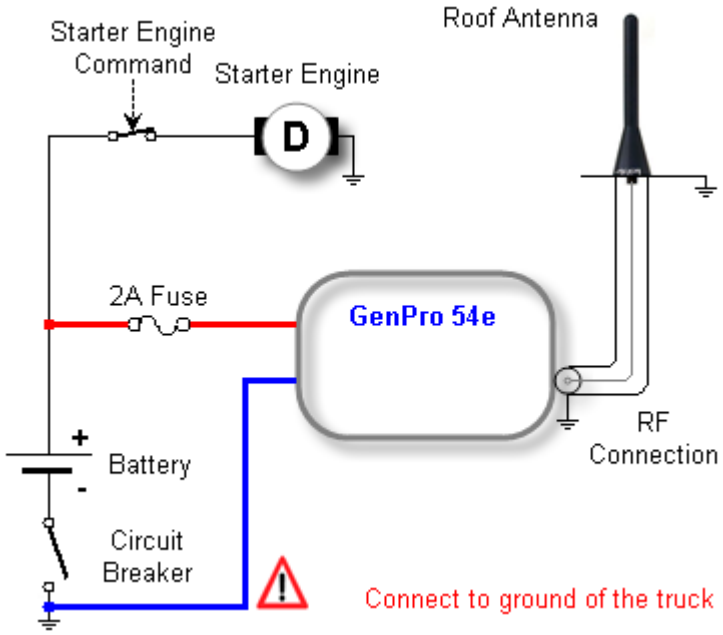

The scheme above shows a recommended power connection where the connection of the modem ground is not directly connected to the battery, but connected after the circuit breaker (on the ground of the truck or in the fuse box).

If this scheme is not respected, the modem can be damaged when starting the truck if the circuit breaker is open. It cannot support important starting currents.

5.2 Turning OFF the modem

It is strongly advised to un-register from the network with the command **AT+COPS=2**

When the battery is present, a mechanism allows to stop completely the application if the external power supply is unplugged, and also to prepare the modem for storage or transport, in order to limit high discharges of the battery.
If the device is not used, it has to be deactivated by sending the following command:

- **If the modem has an application developed with EGM**, send the command
  Cut the external power supply of the modem
  send the command ***AT+GPIOSET=35,0***
- **If the modem does not contain any embedded application**, via the Boot-Loader menu

```
Bootloader V4.09 GL54 UA Gener Ublox (HWF1 rev D/E)
   GSM voltage = 4330 mV
    1 - Update application
    2 - Erase objects
    M - GSM direct access (external supply required)
    A - Advanced
    P - Power off
    E - Exit
```

Cut the external power supply of the modem.
Else **Enter "P"**

Important Note: The switching of the battery and its auto-maintain will be automatically reactivated once the modem will be plugged to its external power supply.

5.3 Starting with the modem

5.3.1 Mounting of the modem

To mount the modem on a support, use the fixing brackets as described below.

Figure 36 : Mounting of the modem

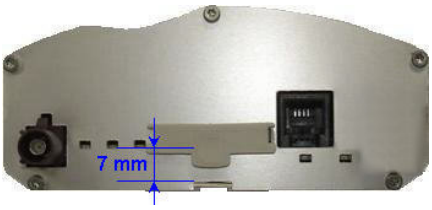

- Must be fixed on a flat surface
- Max. height of the screw head: 7 mm

The aluminum casing of the modem is connected to the 0V (GND) of the power supply and to the 0V of the RS232 serial link. To avoid any risk of conduction of the ground plane to other equipments, the modem must be electrically insulated from its mechanical support.

5.3.2 Install SIM card

To install the modem, it is recommended to do the following operations with the modem turned OFF:

- Remove the SIM card cover on the back side.
- Carefully insert the SIM card into the reader.

Figure 37 : Install SIM card

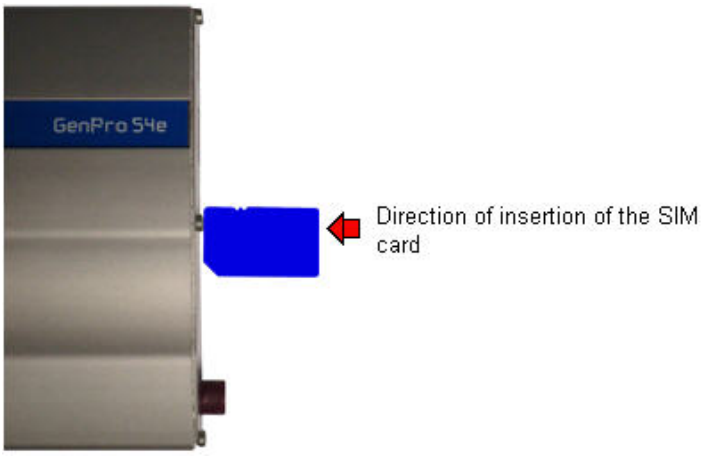

- Push the SIM card until hearing a "click" that ensures its correct positioning.
- Put the SIM cover back.

5.4 Use of the modem

- Install the SIM card.
- Connect the GSM antenna to the FAKRA-D connector.
- For the connection to the DTE, connect the V24 link via the 9-pin Sub D cable.
- Connect the power cable to the continuous and regulated external power source (for an automobile application, see § 5.1 Specific recommendations for the use of the modem in vehicles).
- Connect the power cable to the modem.
- Use a communication software like Windows HyperTerminal ® set as follows:
  - Bits per second .....: 115 200 bps,
  - Data Bits.....: 8,
  - Parity .....: Sans,
  - Stop Bits.....: 1,
  - Flow control .....: none.

5.4.1 Checking the communication with the modem

5.4.1.1 Without application

The GenPro 354e does not contain any application; it will return the menu of the BootLoader.

Menu by default when there is no application inside the equipment (example of display)

```
Bootloader V4.09 GL54 UA Gener Ublox (HWF1 rev D/E)
GSM voltage = 4325 mV
 1 - Update application
 2 - Erase objects
 M - GSM direct access (external supply required)
 A - Advanced
 P - Power off
 E - Exit
```

In the case where no communication can be established with the modem:

- Check the RS232 connection between the DTE and the modem (DCE),
- Check the configuration of the COM port of the DTE.

Descriptions and non-contractual illustrations in this document are given as an indication only.
ERCOGENER reserves the right to make any modification.

5.4.1.2 Standard Library

The GenPro 54e contains the standard library.

Example of display when the standard library is present inside the equipment

```
************************************************************
00:00:00  flash_start_flash: new Flash handle - WAIT
00:00:00  EGM_INIT_SOFTWARE_RESET
00:00:00  Ext2: EGM_FCM_EVENT_FLOW_OPENNED
00:00:00  READY
00:00:00  Gprs_Call_State : GPRS_CALL_INIT
00:00:00  UTC Time field not valid
00:00:00  Date field not valid
00:00:01  Supply status: External supply connected
00:00:02  Analog input 3 State H
00:00:02  sim inserted
00:00:02  PIN code not required
00:00:02  GSM Ready
00:00:03  +CCLK: "12/07/30,09:29:45+00"
00:00:03  Got GSM clock info
00:00:03   *** IMEI: 358696048201787, product: "GenPro354e"
EasePro V300b2_EGM403b24 - GenPro354e - LEON-G100-06S-00 - Thu Jun 21 09:18:01
2012
00:00:03  PHB Ready
00:00:03  sim ready
00:00:07  SMS Ready
00:00:09  Network ready
00:00:09  network_gprs_state: 1
00:00:23  CREG OK : 1
```

Send the command AT+EGM3

The modem returns the version of the library

```
+EGM3: genapi V4.04, Date: Thu Nov 15 13:57:42     2012
```

In the case where no communication can be established with the modem:

- Check the RS232 connection between the DTE and the modem (DCE),
- Check the configuration of the COM port of the DTE

For more information about these AT commands and their associated parameters, see the documents "Commands List EG_EGM_CL_xxx_yy" of ERCOGENER.

5.4.1.3 The application ERCOGENER EasePro_Vx

The GenPro 54e contains the application EasePro_Vx.

Send the command ATI8. The modem returns the version (example of display)

```
EasePro V300b2_EGM403b24 – GenPro54e - LEON-G100-06S-00 - Thu Jun 21 09:18:01
2012
```

For more information about these AT commands and their associated parameters, see the documents "Commands List EG_EasePro_Vx_CL_yyy_UK" of ERCOGENER.

Descriptions and non-contractual illustrations in this document are given as an indication only.
ERCOGENER reserves the right to make any modification.

5.4.1.4 Owner application

The GenPro 54e contains your application.

Set the RS232 port of the DTE according to your parameters (speed, data bits, parity and stop bit).

Check the display and the dialogue with the GenPro 54e according to your own characteristics.

5.5 Checking the quality of the GSM reception signal

The modem will be able to make a call only if the received GSM signal is powerful enough.

The command ***AT+CSQ*** allows to know the reception level (***rssi***) of the signal sent by the closest GSM Base Transceiver Station (BTS), as well as the reception error code (*g*).

When the SIM card is inserted and the PIN code entered, the command ***AT+CSQ*** allows to measure the signal from the BTS of the subscribed operator network.

This command cannot be used without the SIM card.

To check the quality of the GSM signal, do the following operations:

Use a communication software like Hyperterminal, enter the command *AT+CSQ*.

The response is in the following format:

+CSQ : <rssi>, <ber> with:

<***rssi***> **=** indicates the reception level,

<***ber***> **=** receive bit error rate.

Check the returned value <***rssi***> with the help of the table below.

Table 56 : RSSI value

Value of <*rssi*>	Gain in dbm	Interpretation	Value of <*ber*>	Interpretation
0	-113 dbm	Insufficient	0 to 7	See Standards ETSI GSM 05.08
1 to 10	-111 to -95 dbm	Insufficient		
11 to 30	-93 to -53 dbm	Sufficient		
31 (max)	-51dbm	Perfect		
99		Unknown/not detectable	99	Unknown/not detectable

The GSM modem works normally with a minimum <***rssi***> between 11 and 15.

Below 10, the signal level is insufficient; the modem cannot work depending on the geographical situation or the vehicle mobility. Above 15, the signal is sufficient.

For more information about the AT commands, see the document "EG_EGM_CL_xxx_yy" of ERCOGENER.

Descriptions and non-contractual illustrations in this document are given as an indication only.
ERCOGENER reserves the right to make any modification.

5.6 Verification of the PIN code

The PIN code is necessary to make a call or to accept a response coming from the GSM network. This code is held in the SIM card and can be modified by the user.

To check that the PIN code has been entered, use a communication software like Hyperterminal, and enter the command ***AT+CPIN?***

The table below shows the main responses given by the modem:

Table 57 : Verification of PIN code

Command	Response	Interpretation
AT+CPIN?	**+CPIN : ERROR**	The SIM card is absent or not recognized
	+CPIN : READY	The PIN code is correct
	+CPIN : SIM PIN	The PIN code is wrong or not entered yet
	+CPIN : SIM PUK	The PUK code is required

For more information about the AT commands, see the document "EG_EGM_CL_xxx_yy" of ERCOGENER.

5.7 Verification of the modem registration on GSM network

1. Make sure that a valid SIM card is inserted in the SIM card reader of the modem.
2. Use a communication like Hyperterminal, and enter the following AT commands:
   a. ***AT+CPIN="xxxx"*** to enter the PIN code. The user has only 3 attempts to enter the PIN code. After the third attempt, only a second code (code PUK) supplied by the operator, will allow you to choose a new PIN code.
   b. ***AT+CREG?*** to check the registration status on the network. The response will be of the following format: +***CREG*** *:* <***mode***>, <***stat***> with:

   <***Mode***> = configuration of the registration message not solicited,

   <***Stat***> = registration status.
3. Check the registration status according to the value returned in the table below.

Table 58 : Verification of modem registration on GSM network

Command	Response	Interpretation
AT+CREG?	**+CREG : 0,0**	The modem is not recognized by the network.
	+CREG : 0,2 or 0,3	The modem is searching for a network operator.
	+CREG : 0,1	The modem is attached in GSM to the local operator.
	+CREG : 0,5	The modem is attached in GSM to the roaming operator.

If the modem is not registered: check the connection between the modem and the antenna or the reception level of the signal (cf. paragraph 5.5 Checking the quality of the GSM reception signal).
).

Descriptions and non-contractual illustrations in this document are given as an indication only.
ERCOGENER reserves the right to make any modification.

5.8 Verification of the modem registration on GPRS network

1. Make sure that a valid SIM card is inserted in the SIM card reader of the modem.
2. With a communication software like Hyperterminal, enter the following AT commands:
   a. ***AT+CPIN="xxxx"*** to enter the PIN code. The user has only 3 attempts to enter the PIN code. After the third attempt, only a second code (code PUK) supplied by the operator, will allow you to choose a new PIN code.
   b. ***AT+CGREG?*** to check the registration status on the network. The response will be of the following format: +***CGREG*** *:* <***mode***>, <***stat***> with:

   <***Mode***> = configuration of the registration message not solicited,

   <***Stat***> = registration status.
3. Check the registration status according to the value returned in the table below.

Table 59 : Verification of the modem registration on GPRS network

Command	Response	Interpretation
AT+CREG?	**+CGREG : 0,0**	The modem is not recognized by the network.
	+CGREG : 0,2 or 0,3	The modem is searching for a network operator.
	+CGREG : 0,1	The modem is attached in GPRS to the local operator.
	+CGREG : 0,5	The modem is attached in GPRS to the roaming operator.

If the modem is not registered: check the connection between the modem and the antenna or the reception level of the signal (cf. paragraph 5.5 Checking the quality of the GSM reception signal).

For more information about the AT commands, see the document "EG_EGM_CL_xxx_yy" of ERCOGENER.

Descriptions and non-contractual illustrations in this document are given as an indication only.
ERCOGENER reserves the right to make any modification.

5.9 Recommended accessories

The accessories recommended by ERCOGENER for the modem GenPro 54e are described on our website in the section Products/Accessories. For more information, contact our sales department.

6 Support client

ERCOGENER ensures the client support for all its modems sold. You will then have access to:

- The latest version of this document
- The datasheet of the product
- The latest versions of the OS user guides
- Certificates
- Application notes

The support for the EGM developments is proposed as an option (contact us).

ANNEX 1 – 4 pins Micro-FIT cable (Power)

(ERCOGENER reference: 4402304215)

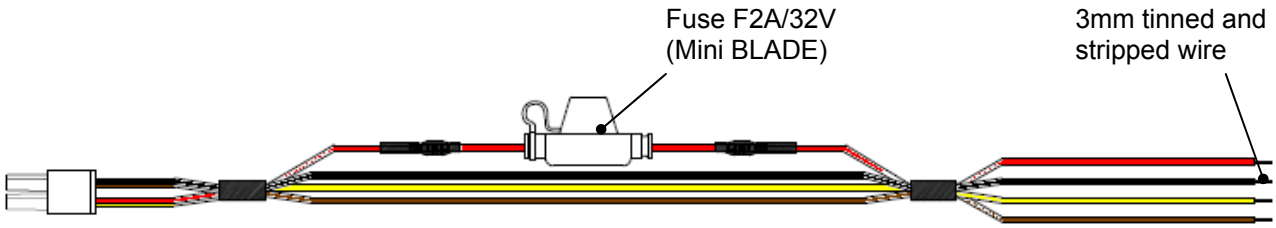

Figure 38 : 4-pin power supply cable

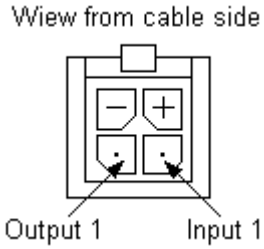

Table 60 : Characteristics of power supply cable

Component	Characteristics
4-pin connector	
Cable	Length ≈ 1.5m
Wire	Section : 0.75 mm²
Fuse	FK2A - 32V

Signal	Color
$+V_{DC}$	Red
GND	Black
INPUT 1 (E1)	Yellow
OUTPUT 1 (S1)	Brown

Fuse reference: Mini Blade for automobile 2A - 32V (color code: grey)

Figure 39 : Fuse Mini Blade

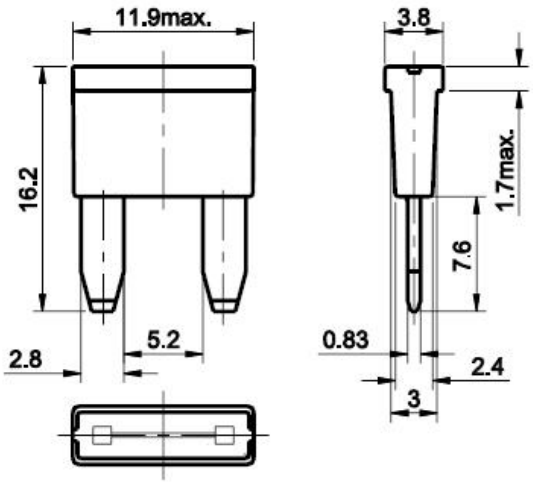

ANNEX 2 – 14 pins Micro-FIT cable (Inputs/Outputs)

(ERCOGENER reference: 4402314215)

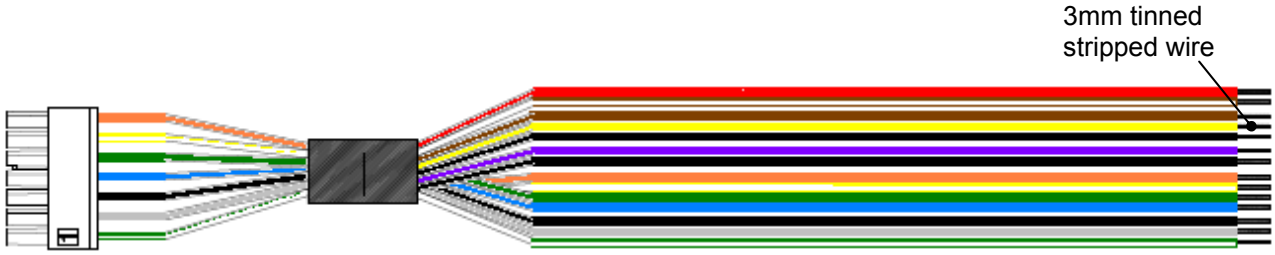

Figure 40 : 14-wires Inputs/Outputs cable

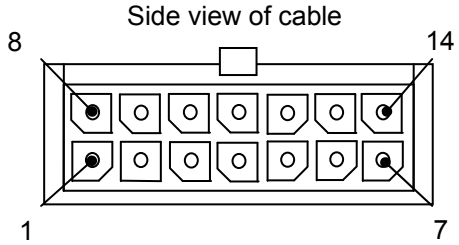

Table 61 : 14-wire Inputs/Outputs cable

Component	Characteristics
14-pin connector	
Cable	Length ≈ 1.5m
Wire	Section : 0.5 mm²

Table 62 : 14-wire Inputs/Outputs cable

N° Broche	Signal	Couleur
1	ONE_WIRE	White/green
2	ANA2	Grey
3	E5-	Black
4	E5+	Blue
5	E4	Green
6	S3	White/Yellow
7	V_{BAT}	Orange
8	GND	Black
9	ANA1	Purple
10	E3-	Black
11	E3+	Yellow
12	E2	Brown
13	S2	White/Brown
14	BUZZER	Red

Descriptions and non-contractual illustrations in this document are given as an indication only.
ERCOGENER reserves the right to make any modification.

ANNEX 3 – 16 pins Micro-FIT cable (14 wires, Serial links)

(ERCOGENER reference: 4404314215)

Figure 41 : 16 pins serial link cable (Serial links)

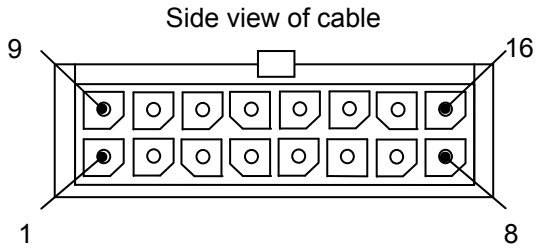

Table 63 : Characteristic 16 pins, 14 wire serial link cable

Component	Characteristics
16-pin connector	
Cable	Length ≈ 1.5m
Wire	Section : 0.5 mm²
Sub D 9 pin Female	

Table 64 : Wiring of 16 pins, 14 wires serial links cable

Pin N°	Signal	Color	Sub D 9 pin
1	GND	Black	---
2	TX_2 ou CANH	Purple	---
3	RX_2 ou CANL	White/Purple	---
4	GND	Black	---
5	CTS_1	White/Brown	---
6	RTS_1	White/Yellow	---
7	TX_1	White/green	---
8	RX_1	White/Blue	---
9	POWER_OUT	White	---
10	RESET	---	---
11	BOOT	---	---
12	GND	Black	5
13	CTS_0	Brown	8
14	RTS_0	Yellow	7
15	TX_0	Green	3
16	RX_0	Blue	2
	---	---	9
	---	---	6
	---	---	4
	---	---	1

Descriptions and non-contractual illustrations in this document are given as an indication only.
ERCOGENER reserves the right to make any modification.

ANNEX 4 - 16-pins Micro-FIT cable (16-wires, Serial link, Boot and Reset)

(ERCOGENER reference: 4402316215)

As an option, a 16-wire cable can be provided. It is the same as the previous one but provides also the "Boot" and "Reset" inputs. These cables have a 30 cm length.

This cable is already included with the EGM development kits.

Figure 42 :16-pins Micro-FIT cable (serial link, Boot and Reset)

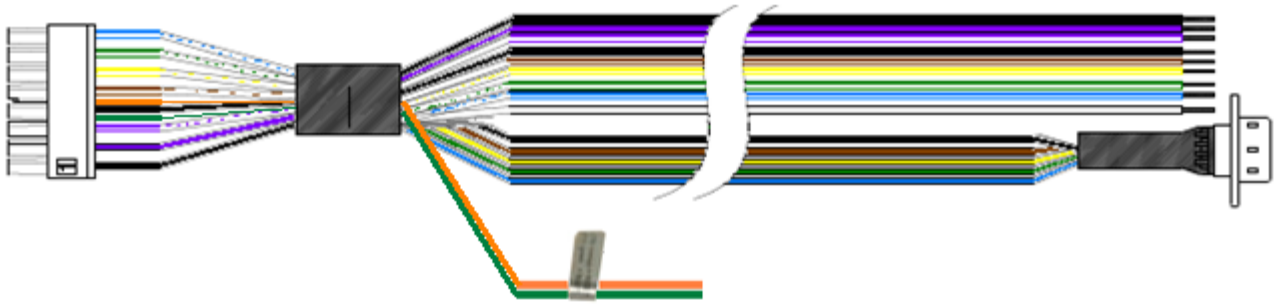

Table 65 : Characteristic 16 pins serial link cable (Boot + Reset)

Component	Characteristics
16-pin connector	
Cable	Length ≈ 0.3m
Wire	Section : 0.5 mm²

Table 66 : Wiring of 16 pins, 16 wires serial links cable (Boot + Reset)

Pin N°	Signal	Color	Sub D 9 pin
10	RESET	Orange	---
11	BOOT	Green	---

Descriptions and non-contractual illustrations in this document are given as an indication only.
ERCOGENER reserves the right to make any modification.

ANNEXE 5 - Abréviations

3GPP	3rd Generation Partnership Project
AC	Alternative Current
ACM	Accumulated Call Meter
ADC	Analog to Digital ConGreener
ADN	Abbreviated Dialing Numbers
AIeC	Automatically Initiated eCall
AMR	Adaptive Multi Rate
APN	Access Point Name
ASCII	American Standard Code for Information Interchange
AT	AT Command Interpreter Software Subsystem, or attention
BER	Bit Error Rate
BL	Black List
BSD	Berkley Standard Distribution
BTS	Base Transceiver Station
CB	Cell Broadcast
CBM	Cell Broadcast Message
CLI	Calling Line Identification
CLIP	Calling Line Identification Presentation
CLIR	Calling Line Identification Restriction
CLK	ClocK
CM	Connection Management
CMOS	Complementary Metal Oxide Semiconductor
COLP	Connected Line Identification Presentation
COLR	Connected Line Identification Restriction
CPHS	Common PCN Handset Specification
CR	Carriage Return
CS	Coding Scheme
CSD	Circuit-Switched Data
CTS	Clear To Send
CUG	Closed User Group
DA	Destination Address
DARP	Downlink Advanced Receiver Performance
dB	Decibel
dBc	Decibel relative to the Carrier power
dBi	Decibel relative to an Isotropic radiator
dBm	Decibel relative to one milliwatt
DC	Direct Current
DCD	Data Carrier Detect
DCE	Data Communication Equipment
DCM	Data Connection Management
DCS	Digital Cellular System
DDC	Display Data Channel (I2C compatible) Interface
DL	Down-link (Reception)
DNS	Domain Name Server
DRX	Discontinuous Reception
DSR	Data Set Ready
DTE	Data Terminal Equipment
DTMF	Dual Tone Multi-Frequency
DTR	Data Terminal Ready
DUT	Device Under Test
EDGE	Enhanced Data rates for Global Evolution
EEPROM	Electrically Erasable Programmable Read-Only Memory
EFR	Enhanced Full Rate
EGM	Erco Gener Middleware

Descriptions and non-contractual illustrations in this document are given as an indication only.
ERCOGENER reserves the right to make any modification.

E-GSM	Extended GSM
EMC	ElectroMagnetic Compatibility
EMI	ElectroMagnetic Interference
ESD	ElectroStatic Discharges
ETSI	European Telecommunications Standards Institute
E-UTRAN	Evolved UTRAN
FDN	Fixed Dialling Number
FIT	Series of connectors (micro-FIT)
FOAT	Firmware Over AT
FOTA	Firmware Over The Air
FR	Full Rate
FS	File System
FTA	Full Type Approval
FTP	File Transfert Protocol
FW	Firmware
GCF	Global Certification Forum
GDI	Generic Digital Interfaces
GND	GrouND
GNSS	Global Navigation Satellite System
GPIO	General Purpose Input Output
GPRS	General Packet Radio Service
GPS	Global Positioning System
GSM	Global System for Mobile Communications
H	High
HDLC	High Level Data Link Control
HPLMN	Home PLMN
HSPA	High Speed Packet Access
HSDPA	High Speed Downlink Packet Access
HSUPA	High Speed Uplink Packet Access
HTTP	HyperText Transfer Protocol
I	Input
I/O	Input / Output
I2C	Inter-Integrated Circuit Interface
ICCID	Integrated Circuit Card ID
ICMP	Internet Control Message Protocol
ICP	Inter Processor Communication
IEC	International Electrotechnical Commission
IMEI	International Mobile Equipment Identity
IMSI	International Mobile Station Identity
IP	Internet Protocol
IRA	International Reference Alphabet
IRC	Intermediate Result Code
ISDN	Integrated Services Digital Network
ISP	Internet Service Provider
IVS	In-Vehicle System (eCall related)
L	Low
L3	Layer 3
LCC	Leadless Chip Carrier
LCP	Link Control Protocol
LED	Light Emitting Diode
LF	Line Feed
LLC	Low Level Command
M2M	Machine-To-Machine
MAX	MAXimum
MCC	Mobile Country Code
ME	Mobile Equipment
MIC	MICrophone

Descriptions and non-contractual illustrations in this document are given as an indication only.
ERCOGENER reserves the right to make any modification.

Micro FIT	Family of connectors from Molex
MIeC	Manually Initiated eCall
MIN	MINimum
MMI	Man Machine Interface
MN	Mobile Network Software Subsystem
MNC	Mobile Network Code
MNP	Microcom Networking Protocol
MO	Mobile Originated
MS	Mobile Station
MSD	Minimum Set of Data (eCall related)
MSIN	Mobile Subscriber Identification Number
MSISDN	Mobile Systems International Subscriber Identity Number
MSPR	Multi-Slot Power Reduction
MT	Mobile Terminated
MWI	Message Waiting Indication
N/A	Not Applicable
NITZ	Network Identity and Time Zone
NOM	NOMinal
NVM	Non-Volatile Memory
O	Output
OD	Open Drain
OLCM	On Line Commands Mode
Pa	Pascal (for speaker sound pressure measurements)
PAD	Packet Assembler/Disassembler
PBCCH	Packet Broadcast Control Channel
PC	Personal Computer
P-CID	Physical Cell Id
PCL	Power Control Level
PCN	Personal Communication Network
PCN / IN	Product Change Notification / Information Note
PD	Pull-Down
PDP	Packet Data Protocol
PDU	Protocol Data Unit
PIN	Personal Identity Number
PLMN	Public Land Mobile Network
POS	Power-On Input (power domain)
PPP	Point-to-Point Protocol
PSAP	Public Safety Answering Point (eCall related)
PSD	Packet-Switched Data
PU	Pull-Up
PUK	Personal Unblocking Key
QoS	Quality of Service
RAM	Random Access Memory
RDI	Restricted Digital Information
RF	Radio Frequency
RFI	Radio Frequency Interference
RFU	Reserved for Future Use
RI	Ring Indicator
RMC	Reference Measurement Channel
RMS	Root Mean Square
RTC	Real Time Clock
RTP	Real-time Transport Protocol
RTS	Request To Send
Rx	Receiver
SAP	SIM Access Profile
SC	Service Centre
SI	SIM Application Part Software Subsystem

Descriptions and non-contractual illustrations in this document are given as an indication only.
ERCOGENER reserves the right to make any modification.

SIM	Subscriber Identity Module
SIP	Session Initiation Protocol
SMA	SubMiniature version A RF connector
SMB	SubMiniature version B RF connector
SMS	Short Message Service
SMSC	Short Message Service Center
SMTP	Simple Mail Transfer Protocol
SNR	Signal-to-Noise Ratio
SNTP	Simple Network Time Protocol
SoR	Steering of Roaming
SPI	Serial Peripheral Interface
SPK	SpeaKer
SPL	Sound Pressure Level
SRAM	Static RAM
TA	Terminal Adaptor
TCP	Transfer Control Protocol
TCP/IP	Transmission Control Protocol / Internet Protocol
TDMA	Time Division Multiple Access
TE	Terminal Equipment
TFT	Traffic Flow Template
TP	Transfer layer Protocol
TU	Typical Urban fading profile
Tx	Transmitter
TYP	TYPical
TZ	Time Zone
UART	Universal Asynchronous Receiver-Transmitter serial interface
UCS2	Universal Character Set
UDI	Unrestricted Digital Information
UDP	User Datagram Protocol
UI	Unnumbered Information
UICC	Universal Integrated Circuit Card
UIH	Unnumbered Information with header Check
UL	Up-link (Transmission)
UMTS	Universal Mobile Telecommunications System
URC	Unsolicited Result Code
USB	Universal Serial Bus (power domain)
USIM	UMTS Subscriber Identity Module
UTC	Universal Time Clock
UTRAN	Universal Terrestrial Radio Access Network
UUS1	User-to-User Signalling Supplementary Service 1
VSWR	Voltage Stationary Wave Ratio
WCDMA	Wideband Code Division Multiple Access

Descriptions and non-contractual illustrations in this document are given as an indication only.
ERCOGENER reserves the right to make any modification.

erco&gener

L'esprit Modem

DECLARATION OF CONFORMITY

Manufacturer : **ERCOGENER**

Address : Z.I de Saint Lambert des Levées
B.P. 30163
49412 SAUMUR CEDEX – France

Website : http://www.ercogener.com

declares that the product :

Name : GenPro 54e Family : 1040M
Type : Modem

Complies with :

- R&TTE 1999/5/EC Directive,
- EN301489-1:V1.8.1
- EN301489-7:V1.3.1
- Compliant with the requirements of the ECE R10 rev4
- EN 301 511 v9.0.2
- EN 60950-1:2006 + A11:2009
- ROHS Compliant : Directive 2002/95/CE.
- REACH N°1907/2006

CE

The corresponding markings appear under the appliance.

Saumur, December 15th 2014

Eric GUENEUGUES
Quality Manager