FM1000 ST User Manual
V1.9

*This version is suitable for device with universal FM1000 firmware
v.00.08.16.Rev.0 and later versions

Table of contents

1 INTRODUCTION 6

1.1 ATTENTION 6
1.2 INSTRUCTIONS OF SAFETY 6
1.3 LEGAL NOTICE 7
1.4 ABOUT DOCUMENT 7

2 BASIC DESCRIPTION 7

2.1 PACKAGE CONTENTS 7
2.2 BASIC CHARACTERISTICS 8
2.3 TECHNICAL FEATURES 9
2.4 ELECTRICAL CHARACTERISTICS 11
2.5 ABSOLUTE MAXIMUM RATINGS 11

3 CONNECTION, PINOUT 12

3.1 HOW TO INSERT SIM CARD INTO FM1000 DEVICE: 12
3.2 INSTALLING FM1000 DRIVERS 13
3.3 NAVIGATE LED 15
3.4 STATUS LED 15
3.5 OBD II 15
3.6 USB 16

4 FIRMWARE 17

4.1 UPDATING FIRMWARE USING USB CABLE 17

5 OPERATIONAL BASICS 19

5.1 OPERATIONAL PRINCIPALS 19
5.2 SLEEP MODES 19
5.2.1 Sleep mode 19
5.2.2 Deep Sleep mode 20
5.3 VIRTUAL ODOMETER 20
5.4 FEATURES 21
5.4.1 Scenarios 21
5.4.2 Trip 22
5.4.3 Geofencing 22
5.5 CONFIGURATION 22
5.6 CONFIGURATOR 23
5.7 RECORD STORAGE 26
5.8 SYSTEM SETTINGS 26
5.9 RECORD SETTINGS 27
5.10 GSM SETTINGS 28
5.10.1 GPRS 28
5.10.2 SMS 28
5.10.3 SMS Events 29
5.10.4 Operator list 31
5.11 DATA ACQUISITION MODE SETTINGS 32
5.11.1 Scenarios settings 35
5.11.2 Trip settings 36
5.11.3 Geofencing settings 37
5.11.4 AutoGeofencing settings 39
5.12 I/O SETTINGS 39
5.12.1 Event Generating 42
5.12.2 Hysteresis 42

5.13 OBD FUNCTIONALITY DESCRIPTION 43
5.13.1 Supported OBD protocols 43
5.13.2 Data 43
5.14 ACCELEROMETER 45

6 SMS COMMAND LIST 45

6.1 SMS COMMAND LIST 46
6.1.1 getstatus 47
6.1.2 getweektime 47
6.1.3 getops 47
6.1.4 getcfgtime 47
6.1.5 ggps 47
6.1.6 getgps 48
6.1.7 getinfo 48
6.1.8 getver 49
6.1.9 allver 49
6.1.10 getio 49
6.1.11 readio # 49
6.1.12 getparam #### 50
6.1.13 setparam #### 50
6.1.14 flush #,#,#,#,#,#,# 50
6.1.15 banlist 50
6.1.16 crashlog 50
6.1.17 defevt 51
6.1.18 battery 51
6.1.19 cleardtc 51
6.1.20 obdinfo 51
6.1.21 faultcodes 51

7 GPRS COMMANDS 51

8 DEBUG MODE 53

9 PARAMETER LIST 55

9.1 PARAMETERS VALUE TYPES 55
9.2 SYSTEM PARAMETERS 55
9.2.1 Sleep Mode (ID=1000) 55
9.2.2 Sleep timeout (ID=1001) 55
9.2.3 Mode Switch Source (ID=1002) 56
9.2.4 Ignition Source (ID=1003) 56
9.2.5 Static navigation settings (ID=1004) 56
9.2.6 Saving/Sending without time synchronization (ID=1005) 56
9.2.7 Power Voltage Low Level (ID=1006) 56
9.2.8 Power Voltage High Level (ID=1007) 57
9.2.9 LED Indication (ID 1008) 57
9.2.10 Battery charge mode (ID 1009) 57
9.3 RECORDS PARAMETERS 57
9.3.1 Sorting (ID=1010) 57
9.3.2 Active Data Link Timeout (ID=1011) 57
9.3.3 Server Response Timeout (ID=1012) 57
9.4 GSM PARAMETERS 58
9.4.1 GPRS content activation (ID=1240) 58
9.4.2 APN Name (ID=1242) 58
9.4.3 APN username (ID=1243) 58
9.4.4 APN Password (ID=1244) 59
9.4.5 Main Server Domain (ID=1245) 59
9.4.6 Backup Server Domain (ID=1241) 59
9.4.7 Target Main Server Port (ID=1246) 59
9.4.8 Target Backup Server Port (ID=1248) 59

9.4.9 Protocol (ID=1247) ... 60
9.4.10 Backup Server Protocol (ID=1249) ... 60
9.4.11 SMS Login (ID=1252) ... 60
9.4.12 SMS Password (ID=1253) ... 60
9.4.13 SMS data sending settings (ID=1250) ... 60
9.4.14 Authorized phone numbers (ID=1260-1269) ... 60
9.4.15 SMS Event PreDefined Numbers (ID=150-159) ... 61
9.4.16 Location by Call (ID=1251) ... 61
9.4.17 Operator List (ID=1271) ... 61
9.5 DATA ACQUISITION MODES PARAMETERS ... 61
9.5.1 Home Network GSM operator code "Vehicle on STOP" parameters ... 61
9.5.1.1 Min Period (ID=1540) ... 61
9.5.1.2 Min Saved Records (ID=1543) ... 61
9.5.1.3 Send Period (ID=1544) ... 62
9.5.1.4 GPRS Week Time (ID=1545) ... 62
9.5.2 Home Network GSM operator code "Vehicle MOVING" parameters ... 62
9.5.2.1 Min Period (ID=1550) ... 63
9.5.2.2 Min Distance (ID=1551) ... 63
9.5.2.3 Min Angle (ID=1552) ... 63
9.5.2.4 Min Saved Records (ID=1553) ... 63
9.5.2.5 Send Period (ID=1554) ... 63
9.5.2.6 GPRS Week Time (ID=1555) ... 64
9.5.3 Roaming Network GSM operator code "Vehicle on STOP" parameters ... 64
9.5.3.1 Min Period (ID=1560) ... 64
9.5.3.2 Min Saved Records (ID=1563) ... 64
9.5.3.3 Send Period (ID=1564) ... 64
9.5.3.4 GPRS Week Time (ID=1565) ... 64
9.5.4 Roaming Network GSM operator code "Vehicle MOVING" parameters ... 64
9.5.4.1 Min Period (ID=1570) ... 64
9.5.4.2 Min Distance (ID=1571) ... 65
9.5.4.3 Min Angle (ID=1572) ... 65
9.5.4.4 Min Saved Records (ID=1573) ... 65
9.5.4.5 Send Period (ID=1574) ... 65
9.5.4.6 GPRS Week Time (ID=1575) ... 65
9.5.5 Unknown Network GSM operator code "Vehicle on STOP" parameters ... 66
9.5.5.1 Min Period (ID=1580) ... 66
9.5.5.2 Min Saved Records (ID=1583) ... 66
9.5.5.3 Send Period (ID=1584) ... 66
9.5.5.4 GPRS Week Time (ID=1585) ... 66
9.5.6 Unknown Network GSM operator code "Vehicle MOVING" parameters ... 66
9.5.6.1 Min Period (ID=1590) ... 66
9.5.6.2 Min Distance (ID=1591) ... 66
9.5.6.3 Min Angle (ID=1592) ... 67
9.5.6.4 Min Saved Records (ID=1593) ... 67
9.5.6.5 Send Period (ID=1594) ... 67
9.5.6.6 GPRS Week Time (ID=1595) ... 67
9.6 FEATURES PARAMETERS ... 68
9.6.1 Scenarios Enable (ID=1600) ... 68
9.6.2 Max Acceleration Force (ID=1602) ... 68
9.6.3 Max Braking Force (ID=1603) ... 68
9.6.4 Max Angular Velocity (ID=1604) ... 68
9.6.5 Max allowed Speed (ID=1605) ... 68
9.6.6 Excessive Idling detection (ID=1607) ... 68
9.6.7 Time to stationary (ID=1608) ... 69
9.6.8 Time to movement (ID=1609) ... 69
9.6.9 Jamming Detection (ID=1606) ... 69
9.6.10 Alarm (ID=1610) ... 69
9.6.11 Unplug Detection (ID=1611) ... 69

9.6.12 Crash Detection (ID=1612) ... 69
9.6.13 Trip (ID=1280) ... 70
9.6.14 Start Speed (ID=1281) ... 70
9.6.15 Ignition Off Timeout (ID=1282) ... 70
9.6.16 Distance Mode (ID=1283) ... 70
9.6.17 Trip Continuous distance counting ... 70
9.6.18 Odometer Value (ID=1284) ... 70
Geofencing ... 71
9.6.19 Frame Border (ID=1020) ... 71
9.6.20 Geofence Zone #1 Shape (ID=1030) ... 71
9.6.21 Geofence Zone #1 Priority (ID=1031) ... 71
9.6.22 Geofence Zone #1 Generate Event (ID=1032) ... 71
9.6.23 Geofence Zone #1 Longitude (X1) (ID=1033) ... 71
9.6.24 Geofence Zone #1 Latitude (Y1) (ID=1034) ... 72
9.6.25 Geofence Zone #1 Longitude (X2) (ID=1035) ... 72
9.6.26 Geofence Zone #1 Latitude (Y2) (ID=1036) ... 72
AutoGeofencing ... 72
9.6.27 Enable/Disable (ID=1101) ... 72
9.6.28 Activation Timeout (ID=1102) ... 73
9.6.29 AutoGeofence event Priority (ID=1103) ... 73
9.6.30 AutoGeofence event generating (ID=1104) ... 73
9.6.31 Radius (ID=1105) ... 73
9.7 ACCELEROMETER PARAMETERS ... 73
9.7.1 Acceleration range configuration (ID=1290) ... 73
9.7.2 Movement filter start (ID=1293) ... 74
9.7.3 Movement filer stop (ID=1294) ... 74
9.8 I/O PARAMETERS ... 74
9.8.1 I/O#1 property parameter (ID=1300) ... 74
9.8.2 I/O#1 priority (ID=1301) ... 74
9.8.3 I/O#1 High level (ID=1302) ... 74
9.8.4 I/O#1 Low level (ID=1303) ... 75
9.8.5 I/O#1 logic operand (ID=1304) ... 75
9.8.6 I/O#1 averaging length (ID=1305) ... 75
9.9 OBD PARAMETERS ... 76
9.9.1 OBD Interface (ID=2100) ... 76
9.9.2 OBD I/O Configuration ... 76
1.7 SMS EVENT CONFIGURATION ... 78
9.9.3 I/O#1 element SMS event configuration (ID=100) ... 78

10 MODULE INSTALLATION ... 80

11 CHANGE LOG ... 82

1 INTRODUCTION

1.1 Attention

Do not disassemble the device. If the device is damaged, before unplugging the power supply, do not touch the device.

All wireless data transferring devices produce interference that may affect other devices which are placed nearby.

Please consult representatives of your vehicle model regarding OBD II location on your vehicle. In case you are not sure of proper connection, please consult qualified personnel.

The programming must be performed using a second class PC (with autonomic power supply).

The device is susceptible to water and humidity.

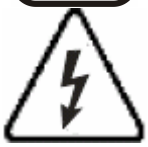

Any installation and/or handling during a lightning storm are prohibited.

FM1000 has USB interface;
Please use cables provided with FM1000 device.
Teltonika is not responsible for any harm caused by using wrong cables for PC <-> FM1000 connection.

Warning! Do not use FM1000 device if it distracts driver or causes inconvenience due to OBD II placement. Device must not interfere with driver.

1.2 Instructions of safety

This chapter contains information on how to operate FM1000 safely. By following these requirements and recommendations, you will avoid dangerous situations. You must read these instructions carefully and follow them strictly before operating the device!

The device uses a 10 V...16 V DC power supply. The nominal voltage is 12 V DC. The allowed range of voltage is 10 V...16 V DC.

To avoid mechanical damage, it is advised to transport the FM1000 device in an impact-proof package.

Before dismounting the device from the vehicle, ignition must be off.

1.3 Legal Notice

Copyright © 2015 Teltonika. All rights reserved. Reproduction, transfer, distribution or storage of part or all of the contents in this document in any form without the prior written permission of Teltonika is prohibited.

Other products and company names mentioned here may be trademarks or trade names of their respective owners.

The manufacturer reserves the right to make changes and/or improvements at any time in design, functionality, parameters and electrical characteristics without any prior notice and without incurring obligations.

1.4 About document

This document contains information about the architecture, possibilities, mechanical characteristics, and configuration of the FM1000 device.

Acronyms and terms used in document

PC – Personal Computer.

GPRS – General Packet Radio Service

GPS – Global Positioning System

GNSS – Global Navigation Satellite System

GSM – Global System for Mobile Communications

SMS – Short Message Service

AC/DC – Alternating Current/Direct Current

I/O – Input/Output

Record – AVL data stored in FM1000 memory. AVL data contains GNSS and I/O information

AVL packet – data packet that is being sent to server during data transmission. AVL packet contains from 1 to 50 records.

2 BASIC DESCRIPTION

FM1000 is a terminal with GNSS and GSM connectivity, which is able to determine the object's coordinates and transfer them via the GSM network. This device is perfectly suitable for applications, which need location acquirement of remote objects. It is important to mention that FM1000 has standard OBD-II interface which lets you to monitor basic vehicle parameters. FM1000 also has a USB port for device status log output and entering configurations.

Note: Monitored basic vehicle parameters depend on vehicle mark and model.

2.1 Package contents[1]

The FM1000 device is supplied to the customer in a cardboard box containing all the equipment that is necessary for operation. The package contains:

FM1000 device;

OBD II power supply adapter (accessory is optional);

USB cable;

170mAh Li-ion battery;

[1] Package content depends on Order Code, and can be customized by customer needs.

2.2 *Basic characteristics*

GSM / GPRS features:

Teltonika TM11Q quad band module (GSM 850 / 900 / 1800 / 1900 MHz);
GPRS class 10;
SMS (text, data).

GNSS features:

TG3300 32 channel (or equivalent) receiver; Up to -161 dBm sensitivity.

Hardware features:

- Cortex®-M3 processor;
- 1 MB internal Flash memory;
- Built-in accelerometer;
- OBD to UART interpreter

Interface features:

Power supply: 10 ÷ 16V;
USB port;
CAN;
K-Line;
Ignition input;
LEDs indicating device status.

Note: Ignition input parameter depends on vehicle mark and model.

Special features:

Any element event triggers (speed, external voltage, etc.);
Highly configurable data acquisition and sending;
Multiple Geo-fence areas;
Sleep mode;
Deep sleep mode;
Configurable scenarios available;
Real-time process monitoring;
Authorized number list for remote access;
Firmware update over GPRS or USB port;
Configuration update over GPRS, SMS or USB port;
TCP/IP or UDP/IP protocol support;
Up to 8000 records storing.

2.3 Technical features

Part name	Physical specification	Technical details
Navigation LED	LED	Power supply 10...16 V DC 2W Max Energy consumption[1]: GPRS: ⎓ average 105 mA r.m.s; Nominal: ⎓ average 49 mA r.m.s; GNSS Sleep: ⎓ average 20 mA; Battery charge current: ⎓ average 121 mA; Deep Sleep: ⎓ average less than 4 mA[2]. Operation temperature: -25 °C ... +55 °C. Storage temperature: -40 °C ... +70 °C. Storage relative humidity 5 ... 95 % (no condensation)
Modem LED	LED	
GNSS	Internal GNSS antenna	
GSM	Internal GSM antenna	
OBD-II connector	Standard OBD-II connector	
USB	Mini USB socket	

Table 1 FM1000 specifications

[1] Energy consumption has been tested at 12V voltage.
[2] When in Deep Sleep mode no data storing and sending is activated.

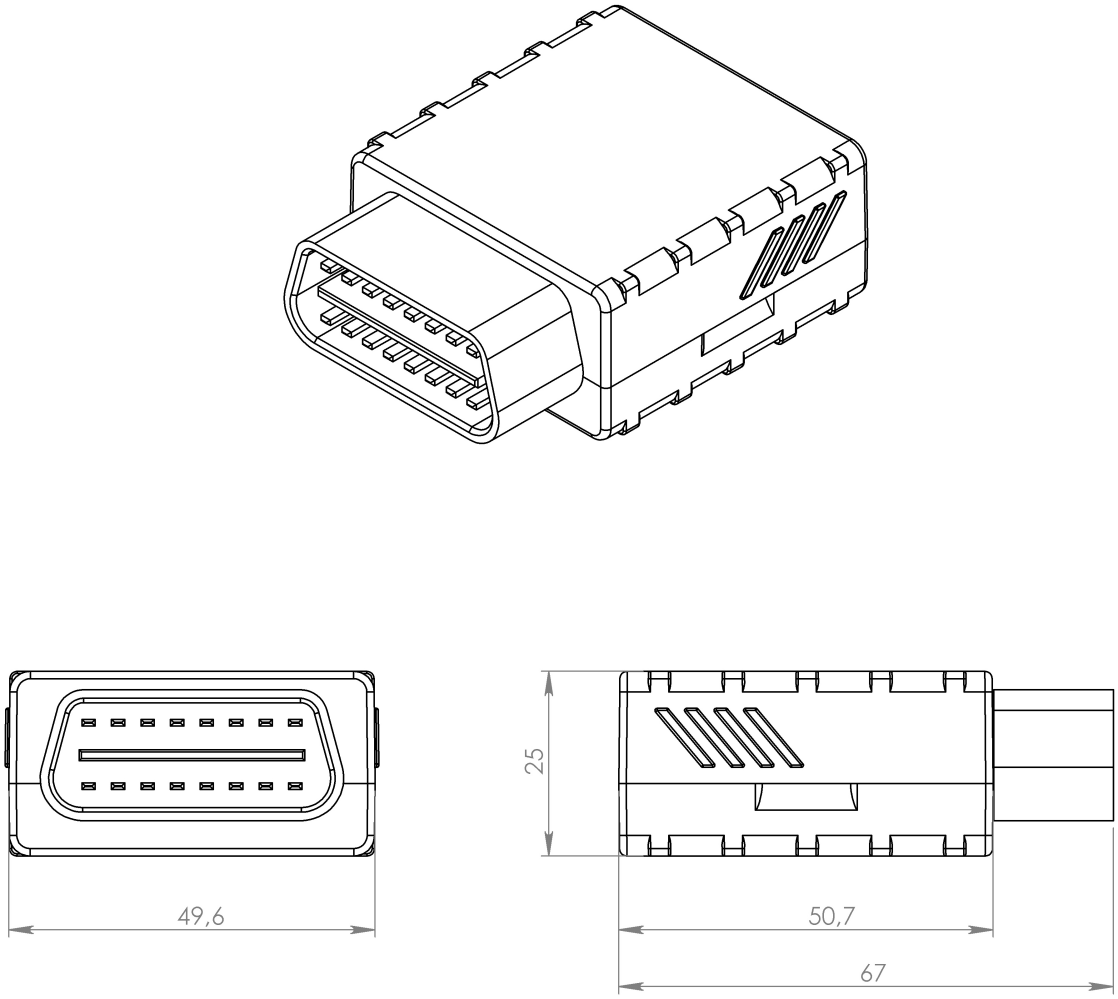

Figure 1 FM1000 view & dimensions (tolerance ±1 mm)

2.4 Electrical characteristics

VALUE / CHARACTERISTIC DESCRIPTION	Min.	Typ.	Max.	Unit
Supply Voltage:				
Supply Voltage (Recommended Operating Conditions)	10		16	V
Digital Input:				
Input resistance (Ignition)	15			kΩ
Input Voltage (Recommended Operating Conditions)	0		Supply voltage	V
Input Voltage threshold (Ignition)		5		V

2.5 Absolute Maximum Ratings

VALUE / CHARACTERISTIC DESCRIPTION	Min.	Typ.	Max.	Unit
Supply Voltage (Absolute Maximum Ratings)	-16		16	V
Digital Input (Ignition) Voltage (Absolute Maximum Ratings)	-32		32	V

3 CONNECTION, PINOUT

3.1 How to insert SIM card into FM1000 device:

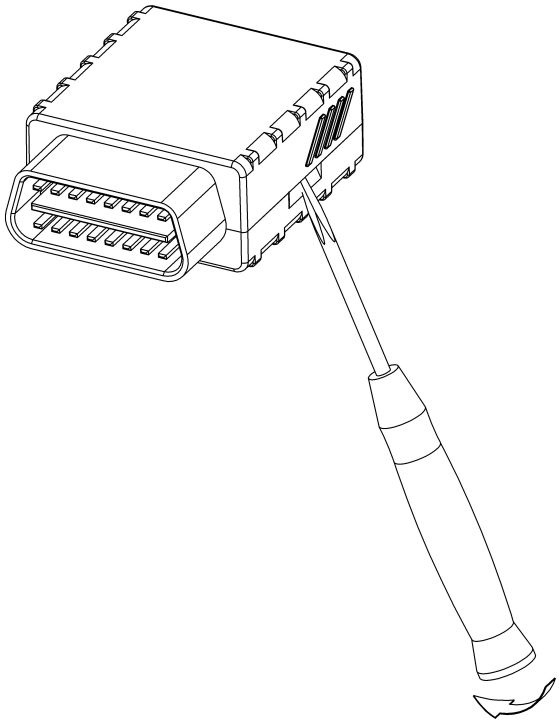

①

Gently open FM1000 case using screwdrivers

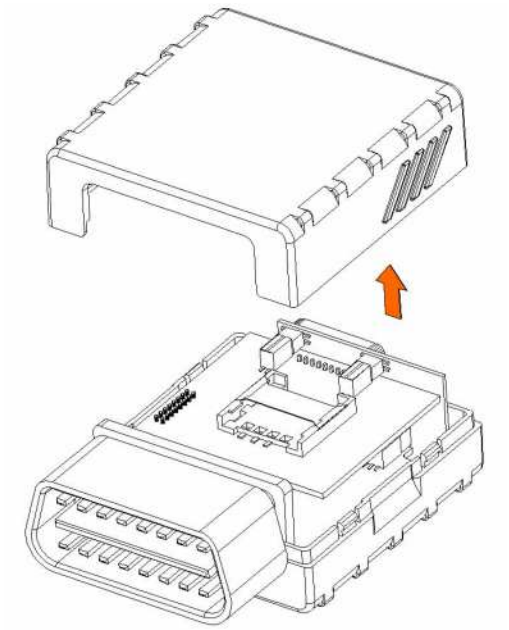

②

Remove FM1000 case

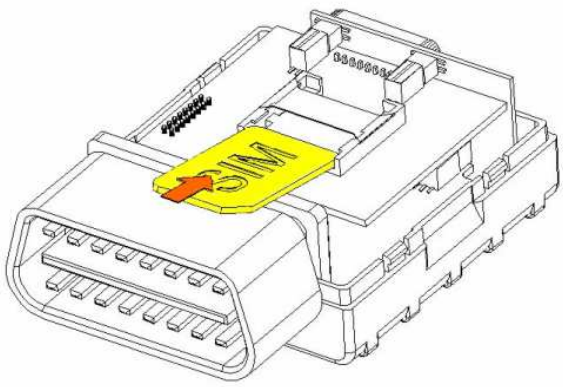

③

Insert SIM card as shown

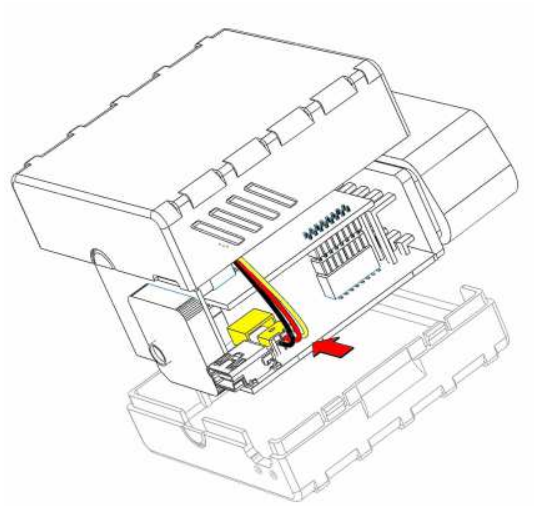

④

Insert battery wire to connector*

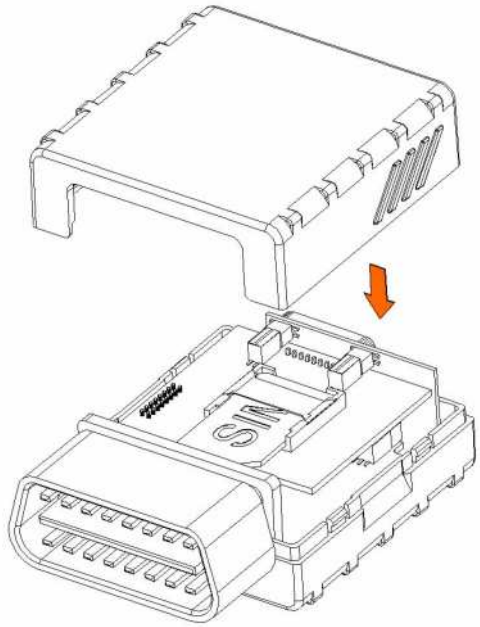

⑤

Attach top housing cover

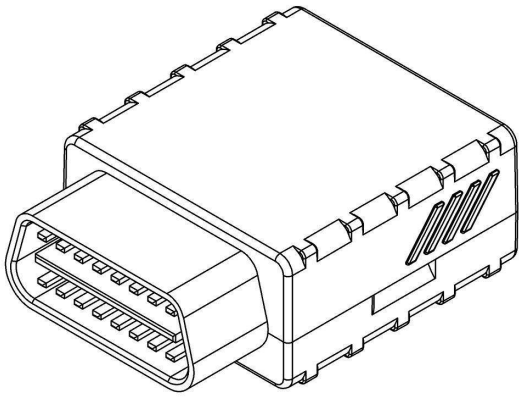

⑥

Device is ready

*Battery is optional

3.2 Installing FM1000 drivers

Software requirements:

- Operating system 32-bit and 64-bit: Windows XP with SP3 or later, Windows Vista, Windows 7, Windows 8.
- MS .NET Framework V3.5 or later (http://www.microsoft.com or http://avl1.teltonika.lt/downloads/tavl/Framework/dotnetfx35setupSP1.zip).

Drivers:

Please download Virtual COM Port drivers from Teltonika website:
http://avl1.teltonika.lt/downloads/FM1000 /vcpdriver_v1.3.1_setup.zip

Installing drivers:

Extract and run VCPDriver_V1.3.1_Setup.exe. This driver is used to detect FM1000 device connected to the computer. Click 'Next' in driver installation window (figures below):

Figure 2 Driver installation window

This will launch device driver installation wizard. In the following window click 'Next' button again:

Figure 3 Driver installation window

Setup will continue installing drivers and will display a window about successful process at the end. Click 'Finish' to complete setup:

Figure 4 Driver installation window

You have now installed drivers for FM1000 device successfully.

3.3 Navigate LED

Behavior	Meaning
Permanently switched on	GNSS signal is not received
Blinking every second	Normal mode, GNSS is working
Off	GNSS is turned off because: Deep sleep mode Or GNSS antenna short circuited

3.4 Status LED

Behavior	Meaning
Blinking every second	Normal mode
Blinking every 2 seconds	Deep sleep mode
Blinking fast for a short time	Modem activity
Blinking fast constantly	Boot mode
Off	Device is not working Or Device firmware being flashed

3.5 OBD II

Pin Nr.	Pin Name	Description
1	Ignition input	
2	PWM BUS+/VPW	
3	-	
4	GND (-)	Ground pin

5	GND (-)	Ground pin
6	CAN H	
7	K-Line	
8	-	
9	-	
10	PWM BUS-	
11	-	
12	-	
13	-	
14	CAN L	
15	L-Line	
16	Power +(10÷16) V DC	Power range +(10...16) V DC to ground

Table 2 OBD II pinout description

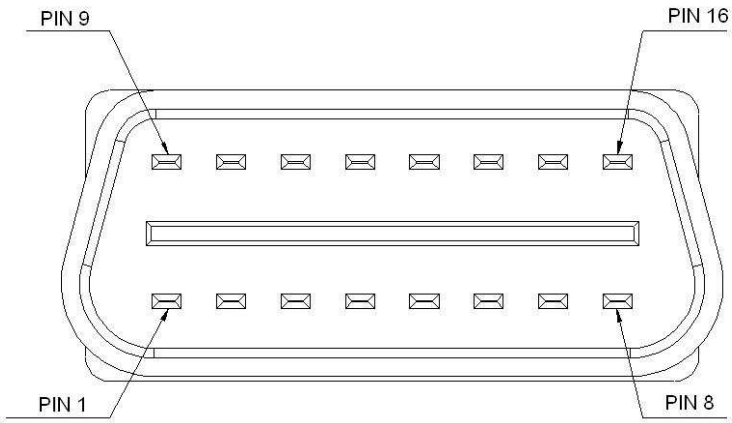

Figure 5 OBD II pinout

3.6 USB

Mini USB connector

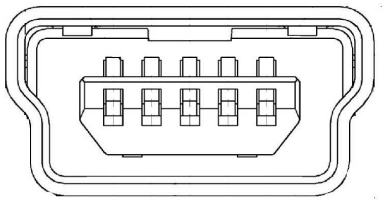

Figure 6 Mini USB type B connector

FM1000 connected to PC creates an STM Virtual COM Port, which can be used as a system port (to flash firmware and configure the device):

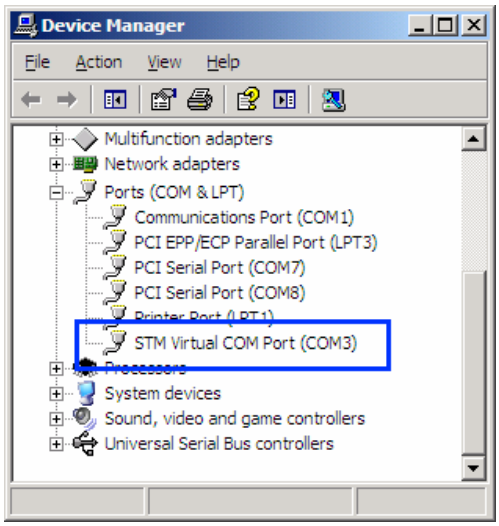

Figure 7 COM-Ports

4 FIRMWARE

4.1 Updating firmware using USB cable

FM1000 functionality is always improving, new firmware versions are developed. Current module firmware version can be retrieved from Configurator.

Connect FM1000 to PC with the USB cable. Launch “Firmware Updater”, select COM port to which device is connected, click connect, and when IMEI and Firmware version fields are filled, start the update. Device needs some time to send IMEI and Firmware version, so do not be afraid if IMEI will not show up immediately, disconnect and after 1-2 minutes try to connect again. When starting update device will open link with updater. With link open device downloads firmware and starts installing. Wait thru all these screens as in **Figure 9** for firmware to update. Update process may take up to several minutes.

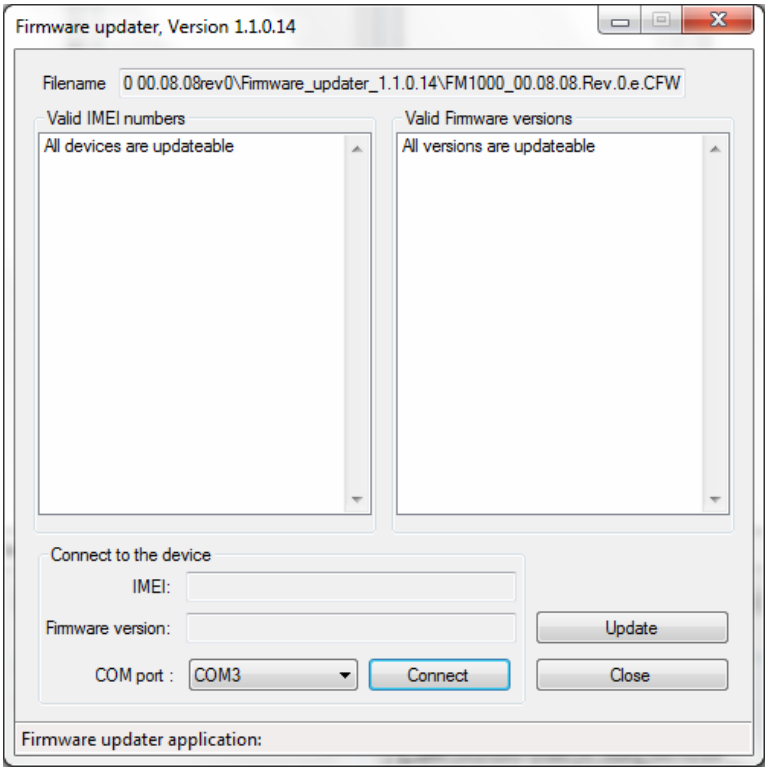

Figure 8. FM1000 firmware updater screen

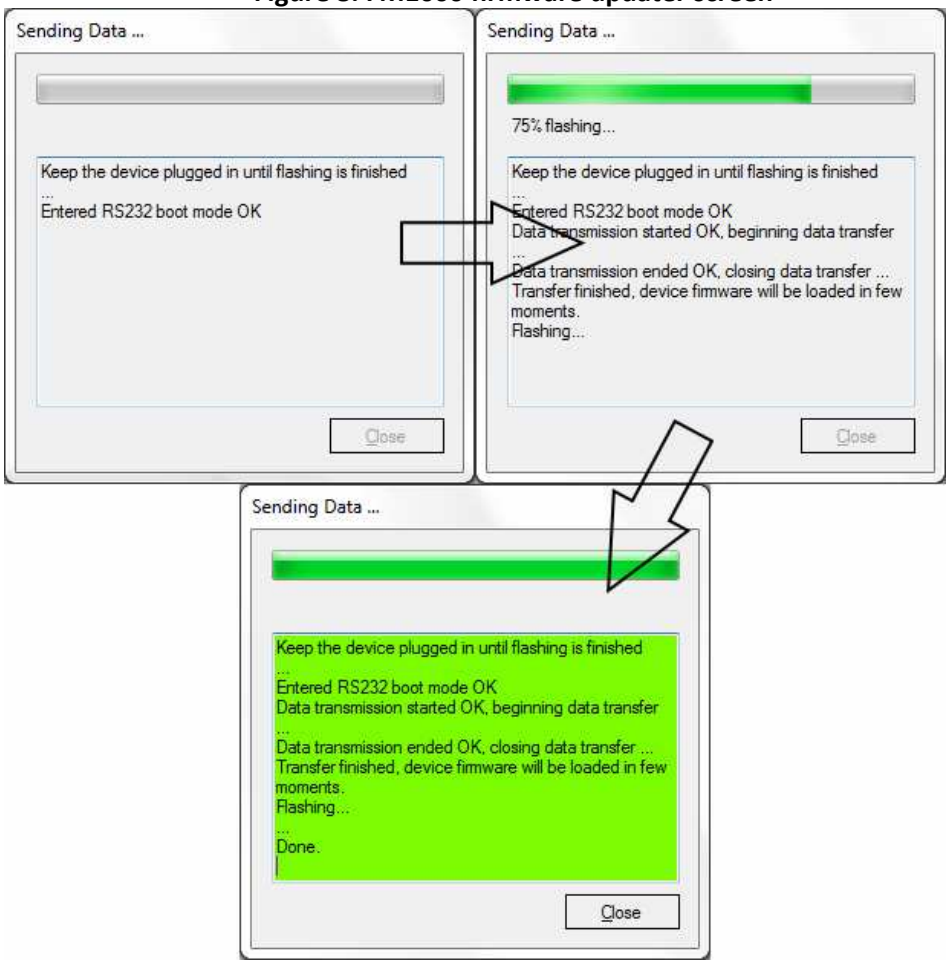

Figure 9. Firmware updating processes

When you see a green table like in **Figure 9**, it means that the firmware is flashed to FM1000 successfully. You may now close the update window and start using your FM1000 device.

5 OPERATIONAL BASICS

5.1 Operational principals

FM1000 module is designed to acquire records and send them to the server. Records contain GNSS data and I/O information. Module uses GNSS receiver to acquire GNSS data and is powered with three data acquire methods: time-based, distance-based and angle-based method. Note, that if FM1000 loses connection to GNSS satellites, it continues to make records, however coordinate in these records remains the same (last known coordinate). Method's details are described in section 5.11. All data is stored in flash memory and later can be sent via GPRS.

GPRS and SMS settings are described in later sections. FM1000 communicates with server using special data protocol. Data protocol is described in "FMXXXX Protocols" document.

FM1000 can be managed by SMS commands. SMS Command list is described in SMS COMMAND LIST section. Module configuration can be performed over TCP or via SMS. Configuration parameters and modes are described in "FMXXXX Protocols" document.

5.2 Sleep modes

5.2.1 Sleep mode

FM1000 is able to go to Sleep mode after configurable Sleep timeout. This timeout (defined period) starts counting when device is in STOP mode. After timeout is reached and all conditions for sleep mode are met, device goes to sleep mode. While in sleep mode, FM1000 turns GNSS module off and it is not making new periodic records. Only event records is being recorded with last known coordinate and sent to AVL server. As a result power usage decreases allowing saving vehicle battery.

FM1000 can enter sleep mode if **ALL** of these conditions are met:

FM1000 has to be configured to work in Sleep mode;

Device must be synchronized time with GNSS satellites;

FM1000 has to be in „X on Stop Mode" (Configured by Mode switch parameter);

Ignition (Configured to be detected by Power Voltage, Ignition or Accelerometer) is off;

Sleep timeout is reached.

FM1000 exits sleep mode when if **ONE** of following conditions are true:

FM1000 switches to "X on Moving Mode";

Ignition (Configured to be detected by Power Voltage, Ignition or Accelerometer) is turned on.

5.2.2 Deep Sleep mode

While in deep sleep mode, FM1000 sets GNSS receiver to sleep mode and turns off GSM/GPRS module (it is not possible to wake up device via SMS). Despite records with last known coordinate are being saved and send to AVL server (GSM/GPRS module is turned on to send data and after that it is turned off again), power usage is decreased to save vehicle's battery. Note, that power saving depends on two configurable parameters: send period and min. record saving period in "X on Stop Mode".

FM1000 can enter deep sleep mode if **ALL** of these conditions are met:

FM1000 has to be configured to work in Deep Sleep mode;

Device must be synchronized time with GNSS satellites;

FM1000 has to be in „X on Stop Mode" (Configured by Mode switch parameter);

Movement by accelerometer is not detected;

Ignition (Configured to be detected by Power Voltage, Ignition or Accelerometer) is off;

Min. Record Saving Period (Data Acquisition Mode settings) must be bigger than Active Data Link Timeout parameter, that FM1000 could close GPRS link.

Send period (Data Acquisition Mode settings) minus Active Data Link Timeout must be more than 90 sec., that FM1000 could close GPRS link for at least 90 sec.

USB cable is not connected.

Sleep timeout is reached.

FM1000 exits deep sleep mode when if **ONE** of following conditions are true:

Movement by accelerometer is detected;

Ignition (Configured to be detected by Power Voltage, Ignition or Accelerometer) is turned on.

USB cable is connected;

Note: In order to save GPRS traffic records saved in deep sleep mode do not contain below listed I/O elements information:
PDOP, HDOP, Odometer, Speedometer , Cell ID, Area Code, GNSS power

5.3 Virtual odometer

Virtual odometer is used to calculate traveled distance in FM1000 as a separate I/O element. If Between Records is selected as Distance Mode, then if FM1000 detects movement, it starts counting distance using GNSS signal: every second it checks current location and calculates distance between current and previous point. It keeps adding these intervals until it is time to make a record, then FM1000 records its location and adds odometer value, which is equal to the sum of all distances, measured every second. When record is made, odometer resets to zero and distance calculation starts all over again.

Continuous (from GPS) Distance Mode works same as Between Records, except odometer is not reset to zero after each record. Odometer is only reset after current trip ends.

Continuous (from OBD) mode works similar to Continuous (from GPS), however traveled distance data is taken from OBD instead of GNSS signal.

5.4 Features

Using available features can greatly increase FM1000 usability options.

5.4.1 Scenarios

Seven scenarios are available on FM1000 device.

Green Driving, Over Speeding, Excessive Idling detection, Jamming detection, Alarm, Crash detection, Unplug detection.

Green Driving Scenario. Helps to prevent and inspect driver about harsh driving. Scenario continuously monitors: accelerating force, braking force and cornering angles.

To save GPRS traffic Green Driving **event** will be **generated (included into records) only** when FM1000 measured values are higher than those set in configuration, without additional I/O settings.

To prevent generating false events, harsh acceleration and harsh braking is monitored only when following conditions are fulfilled:

- Ignition (Configured to be detected by Power Voltage, Ignition or Accelerometer) is turned on.
- Vehicle speed is equal or higher than 10km/h.

Harsh cornering is monitored only when following conditions are fulfilled:

- Ignition (Configured to be detected by Power Voltage, Ignition or Accelerometer) is turned on.
- Vehicle speed is equal or higher than 30km/h.

Note: Green Driving Scenario is a factor on various cars and various drivers testing phase and can be subject to changes. Teltonika is constantly working on improvement of the functionality of the devices, and strongly recommends using the latest version of the firmware.

Over Speeding Scenario. Helps to prevent from exceeding fixed speed and inspects driver if needed. OverSpeeding event is generated only when vehicle speed exceeds configured Max allowed speed

Excessive Idling Detection Scenario informs you if your vehicle is stationary but engine is on for selected period of time to help you to save fuel.

Jamming detection Scenario detects GSM connection jamming to inform you that your vehicle security could be in danger.

Alarm Scenario generates event if FM1000 receives an alarm command from remote control.

Unplug detection Scenario generates event when FM1000 is plugged out of OBD socket. There are two types of detection: simple – used in cars, where power voltage is not dependant on ignition (recomended); advanced – used in cars, where power voltage is disconnected when ignition is switched off.

5.4.2 Trip

Trip customizable feature enables user extended monitoring of performed trips (from engine start at present location to engine stop at arrived location), log their start and stop points, view driven total distance[3]. Event will be **generated (included into send records) only** when trip starts and finishes. If Private/Business trip is configured, then by default private trip will start, unless before turning ignition on remote control's button is pressed. In case of standard trip functionality, at the beginning of the trip event will be generated with value "1". In case of Private/Business trip, the value of trip start will be "2" or "3", "2" being private trip and "3" – business.

Note: Scenarios and Trip features are activated only if Ignition (Configured to be detected by Power Voltage, Ignition or Accelerometer) is turned on.

5.4.3 Geofencing

Geofencing is another feature which is highly customizable and can detect wherever car enters or leaves customized areas. More about Geofencing can be read in 5.11.3 Geofencing settings chapter.

Auto Geofencing feature if enabled is activated automatically by turning off car Ignition (Configured to be detected by Power Voltage, Ignition or Accelerometer). Next time before driving user has to disable Auto Geofencing by turning on car ignition (Configured to be detected by Power Voltage, Ignition or Accelerometer). In case of theft car leaves Auto Geofencing zone without authorization FM1000 device automatically sends high priority record to AVL application.

5.5 Configuration

Installing FM1000 for configuration:

Plug in device to OBD-II power adapter (accessory is optional).
Connect output wires to DC power source (10-16V).
Plug in USB mini cable.
Open configurator and configure your device.

[3] Continuous odometer – total driven distance, works only in TRIP mode. Continuos distance is counted only for ONE trip. If trip is finnished (stop point is detected), odometer resets to 0 (zero). Next trip will start counting from the begining.

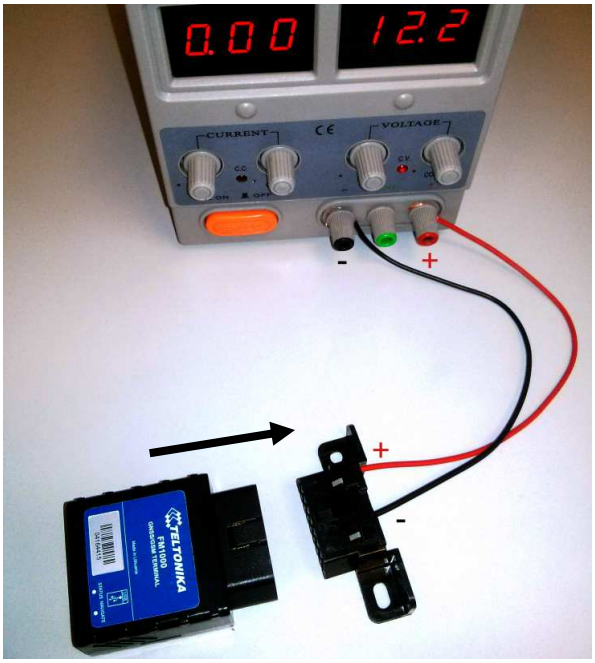

Figure 10 inserting FM1000 to OBD-II connector

5.6 Configurator

FM1000 configuration is performed via FM1000 Configurator program. Contact sales manager to get the latest FM1000 Configurator version. FM1000 configurator operates on Microsoft Windows OS and uses MS .Net Framework 3.5 or higher. Please ensure that MS .Net Framework 3.5 or later is installed on your PC before starting configurator. Latest MS .Net Framework version can be downloaded from official Microsoft web page.

Module configuration is performed over USB cable. Configuration process starts from starting FM1000 Configurator program and then connecting to FM1000 device via Connect button located on the top left corner of configurator. If connected successfully IMEI, Version fields which were empty, now are filled with certain numbers depending on Modem IMEI and firmware version of your device (figure below).

New FM1000 module has default recommended factory settings. Recommended settings have optimal parameters to ensure best performance of track quality and online data sending.

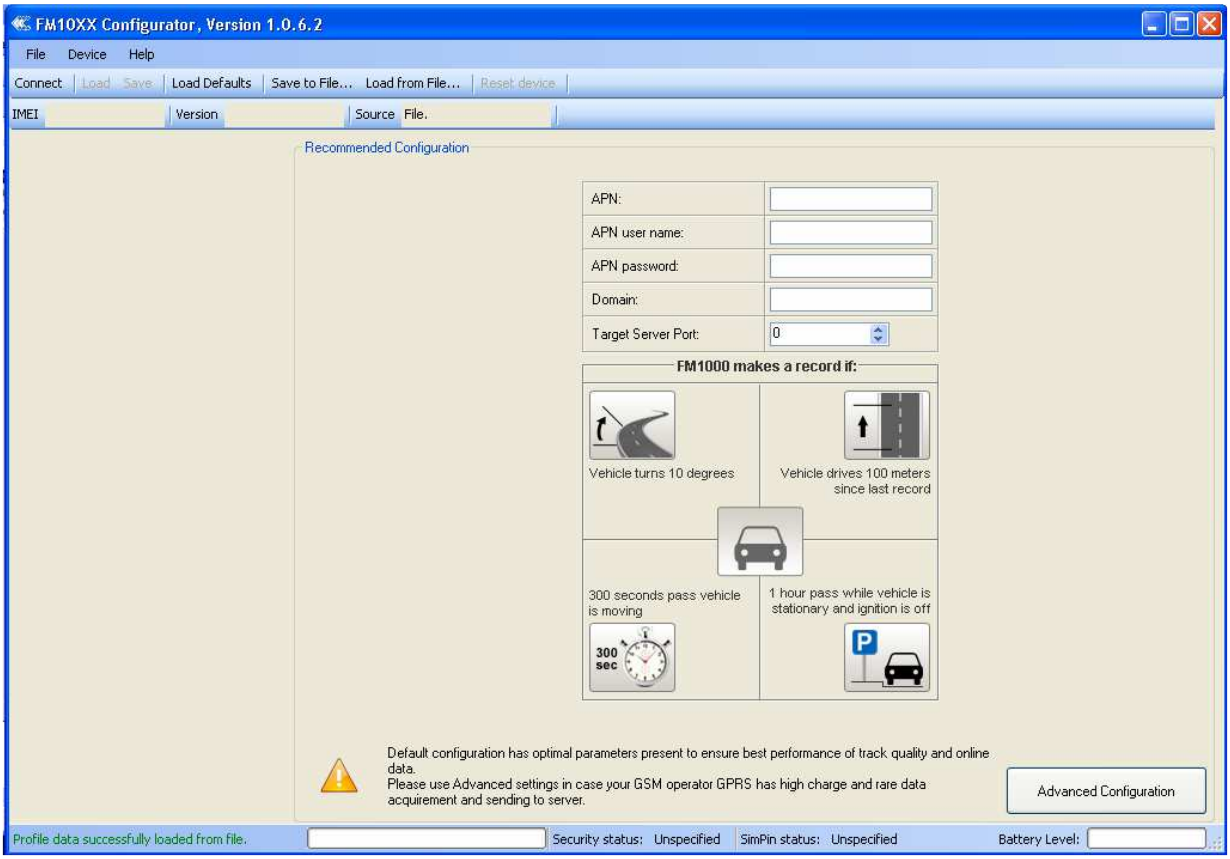

Figure 11 Configurator recommended configuration window

Recommended device configuration is simple and is performed as follows:

Connect device to configurator

↓

Enter GSM provided APN; APN user name; password; domain; Target server port

↓

Save configuration and disconnect

↓

Plug device to your vehicle and it is ready to use

If you are not satisfied with recommended default device configuration or want to use additional FM1000 features such as geofencing, green driving etc. (all features are written below) use advanced device configuration. Just click **Advanced Configuration** button on lower right corner in configurator and new menu options appears (figure 12). You can always go back to recommended configuration menu only by clicking **Recommended Configuration** button in main button area (area 1). For further device configuration in Advanced mode read description below.

FM1000 in advanced configuration has one user editable profile, which can be loaded from device, and saved. User can also reset to default settings, by pressing Load Defaults button. After any modification of configuration settings it has to be saved to FM1000 device, otherwise it will not be written to device.

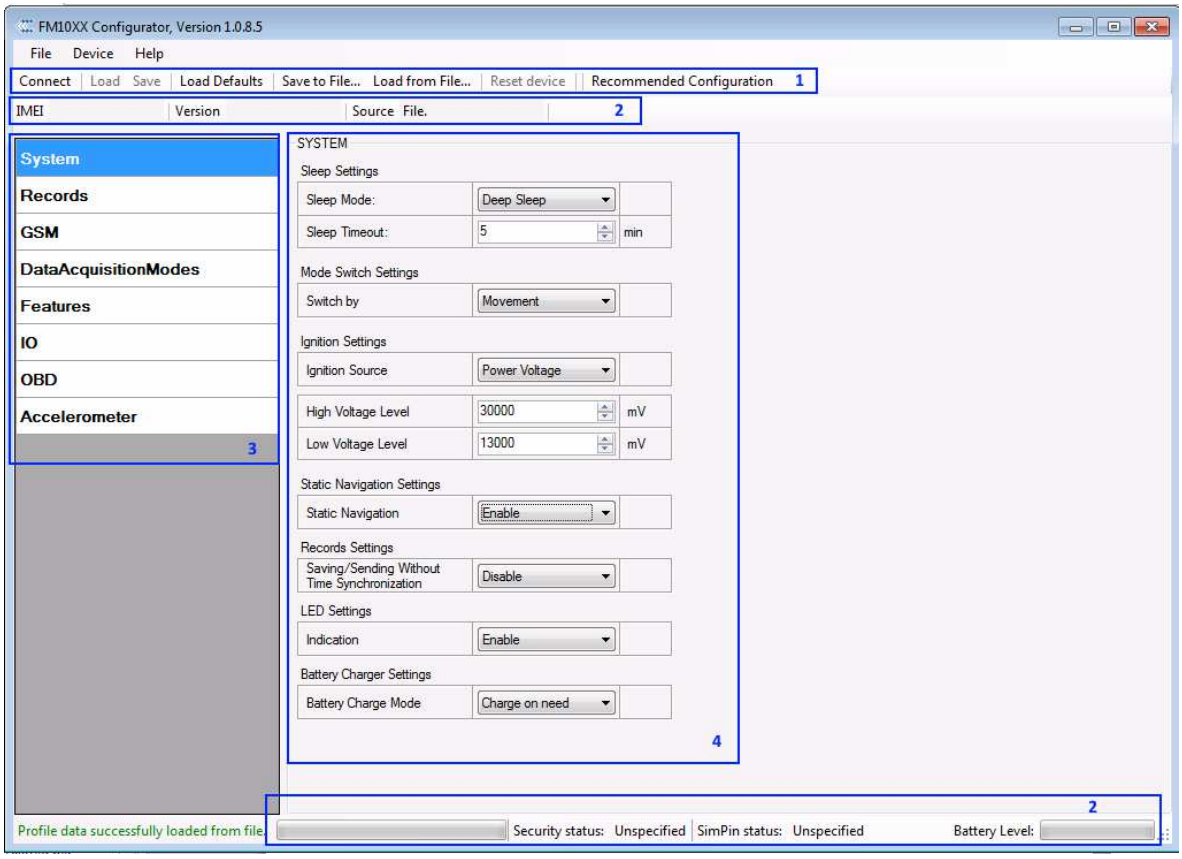

Figure 12 Configurator window

FM1000 Configurator is divided into 4 main areas: 1 – main button area, 2 – information area, 3 – settings menu, 4 – parameters and values menu.

Main Buttons description:

'Connect' – connects device.

'Load' – reads configuration parameters from FM1000 Flash memory.

'Save' – saves configuration parameters to FM1000 Flash memory.

'Load Defaults' – loads default FM1000 settings that later can be modified. This procedure must be performed before entering new parameters.

'Save to File…' – allows user to save currently entered settings to .XML file, for later usage.

'Load from File…' – allows user to load configuration saved in .XML extension file.

'Reset device' – reboots FM1000 and displays processor firmware version.

Additional Buttons description:

'SIM PIN' – allows to enter PIN code if inserted SIM card has activated PIN code security. Note that PIN code can be entered 2 times. After that SIM CARD must be removed from FM1000 and PIN code entered manually.

'Add Keyword' / 'Change Keyword' / 'Switch Security Off'– buttons are used to protect configurator from unauthorized access to configuration.

Keyword is 4 – 10 symbol length. If keyword is set, every time user reconnects FM1000 to USB port, user will be asked to provide valid keyword when connecting FM1000 to configurator. User is given 5 attempts to enter keyword. After entering valid keyword, counter resets to 5.

If user disconnects FM1000 using 'Disconnect' button and does not disconnect from USB port, after reconnecting using 'Connect' button, configurator does not ask for keyword.

ATTENTION! If you have entered a keyword, disconnected from the configurator and then later connected again, you will need to enter the keyword that you have entered previously. If you have forgotten it, please contact your local sales manager.

5.7 Record storage

FM1000 can store up to 8000 data records if GSM or GPRS is not available at the moment. It will send data later when GPRS is available again. Note that FM1000 can have memory full of records. In such case it will start deleting oldest records in order to save new ones. Sending all the data records to server may take some time. Sending 8000 records for FM1000 may take for about 2 hours (exact time may differ depending on GPRS/server load).

You can access all uploaded data from TAVL4 application.

More details on how to use TAVL application please refer to "TAVL4 application user manual" documentation.

5.8 System settings

System settings have 6 configurable parameters:

Sleep settings, where user can turn sleep/deep sleep on or off;

Mode Switch Settings, where user can configure 3 ways how FM1000 will change its working mode;

Ignition Settings, where user can configure ignition detection source (for ignition source). Ignition Source can be selected as Power Voltage, Digital Input 1 or Movement. This parameter has influence on all FM1000 application. If ignition source is set to Power Voltage ranges for ignition detection must be configured. Ignition is set to 1 when Power Voltage is in range between Low & High Power Voltage Levels.

Static Navigation – when this parameter is enabled, FM1000 filters out GPS jumps, when vehicle is not moving. When it is disabled, it does not make any changes to collected GPS data.

Records Settings, where user can turn on saving/sending without time synchronization.

LED Settings, where user can enable/disable LED indication (both – GSM and GPS). This configuration parameter is saved in FLASH and when LED indication is disabled and device is turned on, indication will be enabled until configuration will be read from FLASH (may be a few seconds delay).

Battery Charger Settings, where user can select when charging is allowed. **Charge on need** or **charge after ignition ON**. If device is configured to charge battery after ignition is on, charger can be enabled after ignition is turned on, except if battery is fully charged or 10 minute timeout has not passed since device was turned on for faster FIX receiving. If ignition is off charger must be turned off.

Mode Switch by	Vehicle on Stop mode	Vehicle Moving mode
Ignition (recommended)	If ignition is low (Configured to be detected by Power Voltage, Ignition or Accelerometer)	If ignition is high (Configured to be detected by Power Voltage, Ignition or Accelerometer)
Movement (accelerometer)	Internal accelerometer does not detect movement	Internal accelerometer detects movement
GNSS	GNSS fix is available and vehicle speed is lower than 5 km/h	GNSS fix is available and vehicle speed is higher than 5 km/h
	While GNSS fix is unavailable, Object Motion Detection Settings are working like in Movement mode	

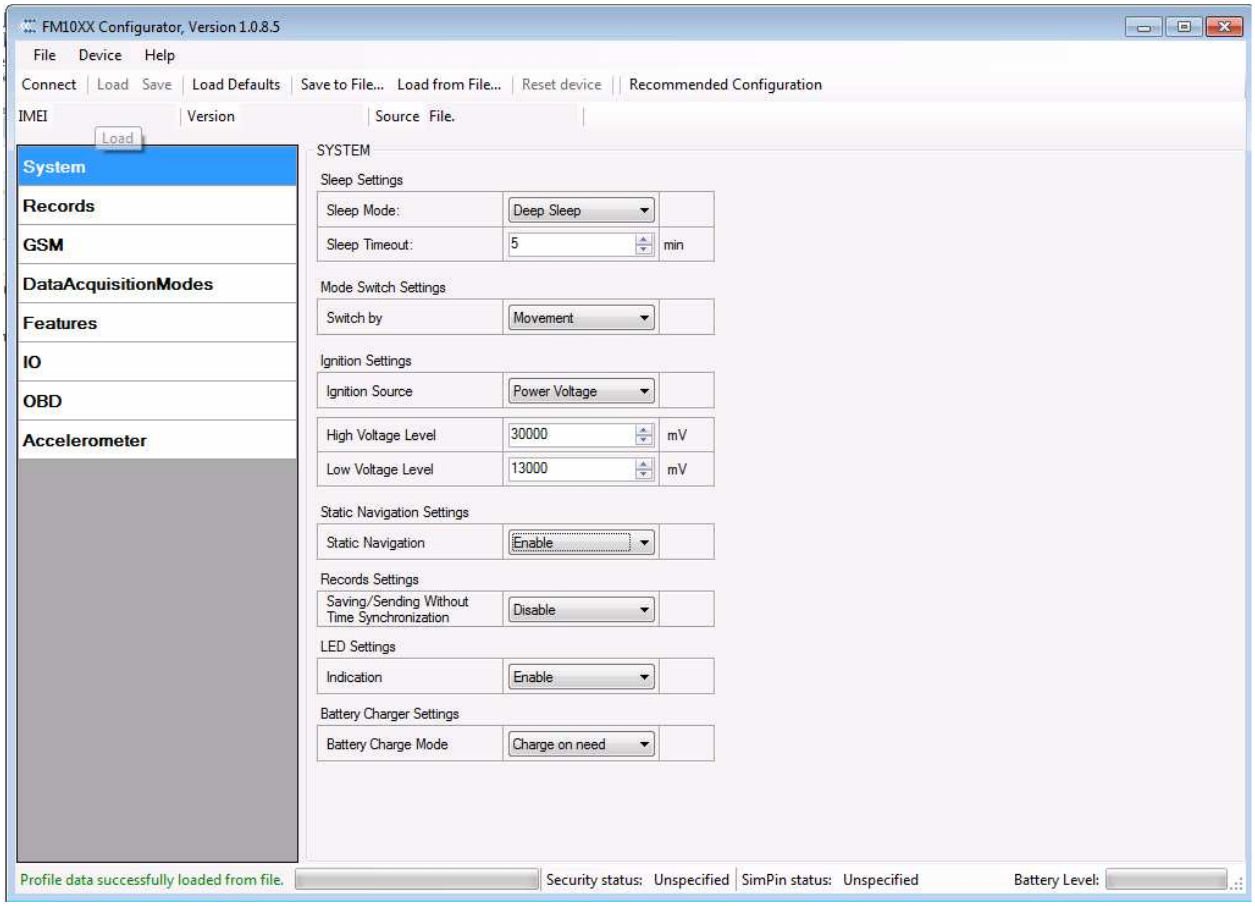

Figure 13 System settings configuration

5.9 Record settings

Here user can modify if FM1000 device will send newest records first, meaning, that the most important thing is to know recent position of car, older records are being sent right after newest records arrive to AVL application.

Activate Data Link Timeout is used to set timeout of link between FM1000 and AVL application termination. If FM1000 has already sent all records it waits for new records before closing link. If new records are generated in the period of this timeout, and minimum count to

send is reached, they are sent to AVL application. This option is useful when GSM operator charge for link activation.

Server Response Timeout is used to set time period waiting for response from server side.

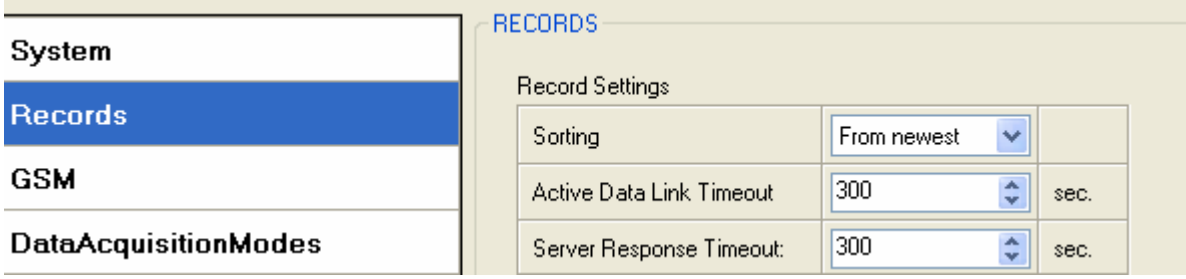

Figure 14 Records settings configuration

5.10 GSM settings

5.10.1 GPRS

'GPRS' defines main parameters for FM1000: GSM operator APN and GPRS username and password (optional – depending on operator), destination server IP and port, and allows to set protocol used for data transfers – TCP or UDP. FM1000 additionally supports backup server. If main server is not responding, FM1000 connects to backup server and still sends records for 5 min (MAX) or until link is not closed (can be closed by configurable Active link TMO parameter). Both servers have the same configurable parameters.

Some operators use specific authentication for GPRS session – CHAP or PAP. If any of these is used, APN should be entered as '`chap:`<APN>' or '`pap:`<APN>'. I.e. if operator is using APN 'internet' with CHAP authentication, it should be entered as '`chap:internet`'. Information about APN and authentication type should be provided by your GSM operator.

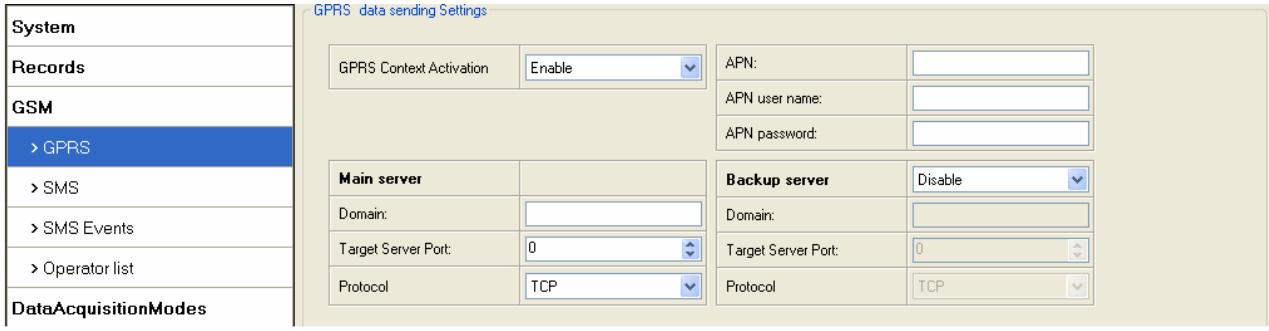

Figure 15 GPRS configuration

5.10.2 SMS

Essential fields in 'SMS' are 'SMS Login' and 'SMS Password'. The login and password are used with every SMS sent to FM1000. If login and password are not set, in every SMS sent to FM1000 device two spaces before command have to be used (<space><space><command>).

Command structure with set login and password:

<login><space><password><space><command>, example: "asd 123 getgps"

Phone numbers have to be written in international standard, without using "+" or "00" signs in prefix. If no numbers are entered, configuration and sending commands over SMS are allowed from all GSM numbers.

SMS data sending settings – enable or disable **panic** event SMS usage. This setting does not affect replies to SMS request messages – answers are always sent back to sender telephone number.

Also functionality **Location by call** is configured in this field. User can select what to do with incoming call: Do nothing (default), Just hang up, Hang up and report with SMS. Sent SMS is ggps SMS format. If Authorized numbers list is used, location SMS would be sent only to authorized number. If Caller in not in authorized User List - position SMS would not be sent.

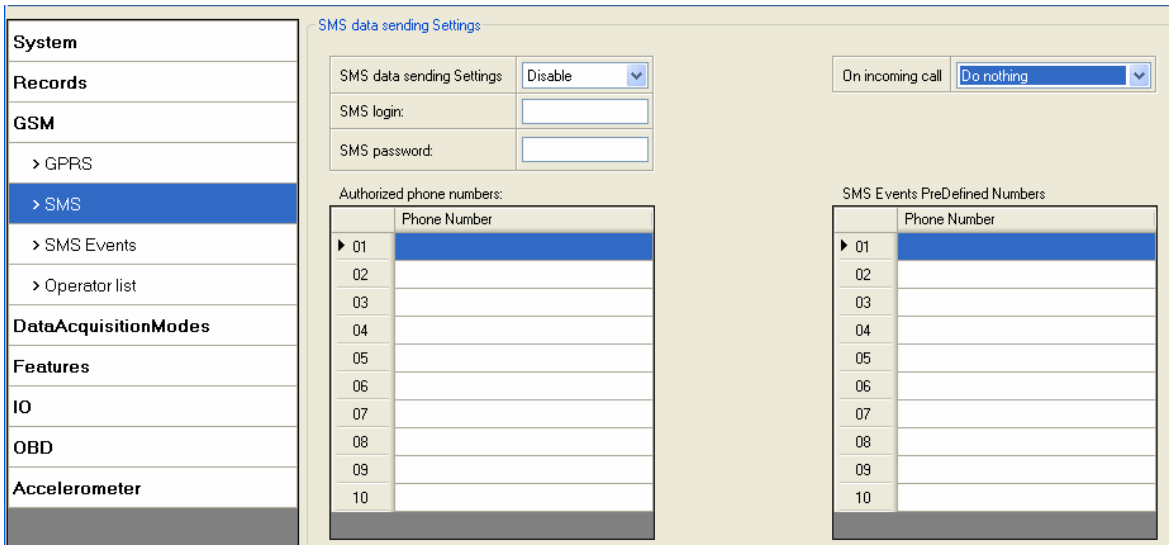

Figure 16 SMS configuration

Note: A mobile phone will not understand SMS with binary code, so sending it to a mobile phone is useless. When sending a binary SMS to a phone number, which is a server phone number, the server can interpret and understand binary code, so the data can be read and you can view it on the server.

SMS login and password and authorized number list are used to protect FM1000 module from unauthorized access. Module accepts messages only from a list of authorized numbers and with proper module login and password. Location by call feature also check authorized numbers list. Numbers must be without “+” or “00” prefix. If no authorized numbers are entered, module accepts messages from all numbers.

5.10.3 SMS Events

SMS events functionality allows FM1000 to send a configured SMS when an event is triggered. This event can be triggered by scenarios, trip, geofencing, autogeofencing, I/O, OBD events.

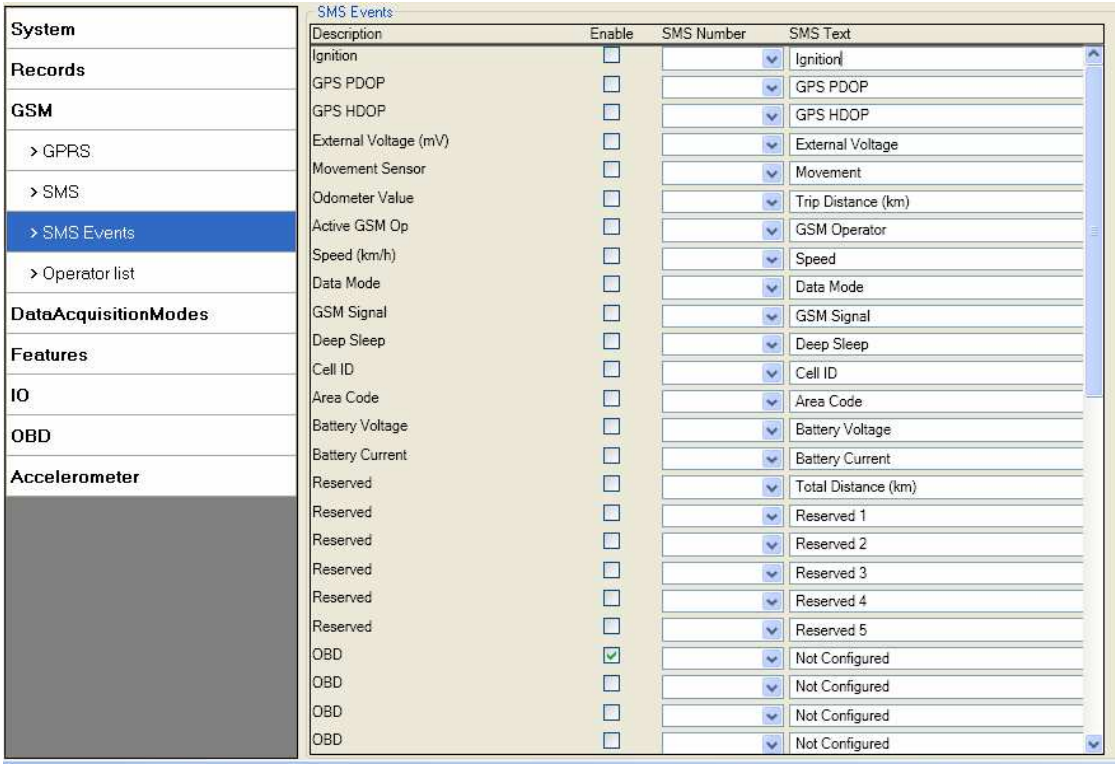

Figure 17 SMS Events configuration

When any of the above events is triggered, FM1000 sends a configured SMS message to a defined phone number. If SMS events is activated, but there are no numbers defined in SMS events PreDefined Numbers list (figure 18), then the device will not send any messages.

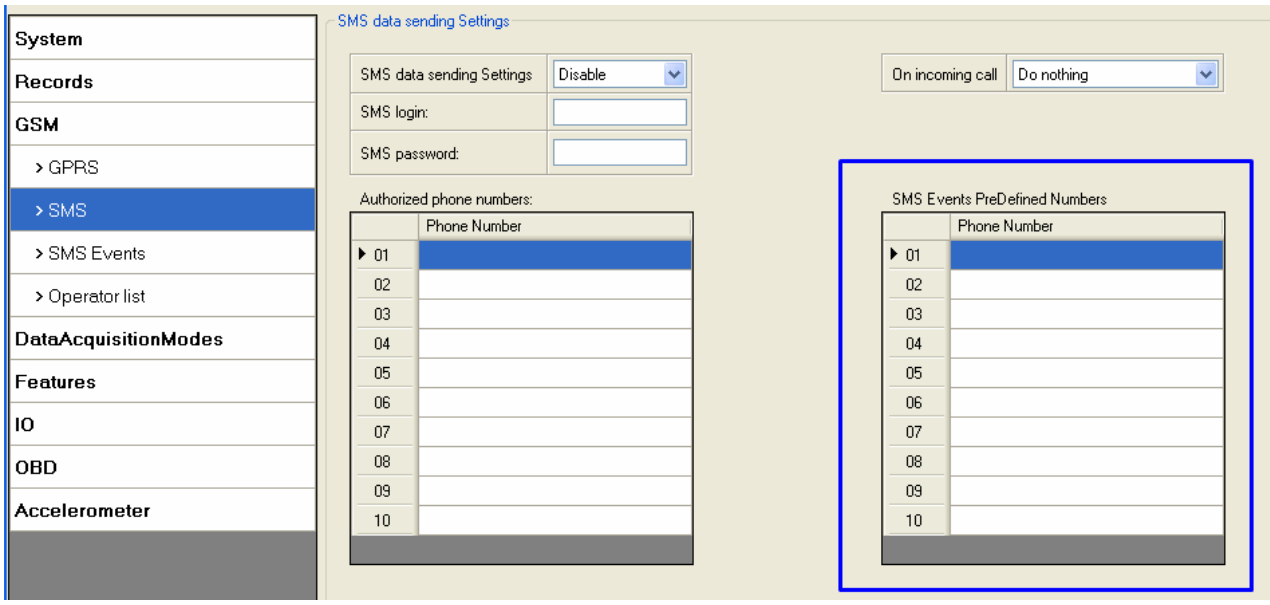

Figure 18 SMS Events PreDefined Numbers list

The sent SMS messages format is according to:

"Date Time EventText"

For example, if FM1000 is configured to send an SMS, when Digital Input 1 reaches High level, with priority High and configured to generate event on both range enter and exit, then the sent SMS is:

"2015/4/1 12:00:00 Digital Input 1"

The SMS Text field can be altered and any text can be entered. Maximum message length is 90 symbols (numbers, letters and symbols in ASCII, except for comma ",").

ATTENTION!
If FM1000 is in Deep Sleep mode and SMS event occurs with LOW priority (which does not wake up FM1000), then the device does not send the message. It is saved in device memory until it wakes up from Deep Sleep mode and GSM modem starts working normally. After it wakes up, all the messages that are saved in memory will be sent, but keep in mind that only 10 messages can be saved in memory – all other messages will not be saved, until there is room in device memory.

FM1000 sends SMS event message when a configured property enters and/or exits its configured High/Low boundaries or Hysteresis event generation is chosen (Monitoring does not generate event, so SMS event could not be configured). Every element of SMS event can be configured to send individual message to different numbers.

5.10.4 Operator list

Operators list is used to select preferred operator in home and roaming network. First row (01) is reserved to home operator code. If operator list first row is left empty, FM1000 device automatically connects to SIM home operator, which is automatically detected and FM1000 will work in Home mode. Next rows (02, 03, 04 …) are used as preferred operators in roaming network. Operator list is used for Data Acquisition Mode switching (see chapter 5.11 Data Acquisition Mode settings for more details).

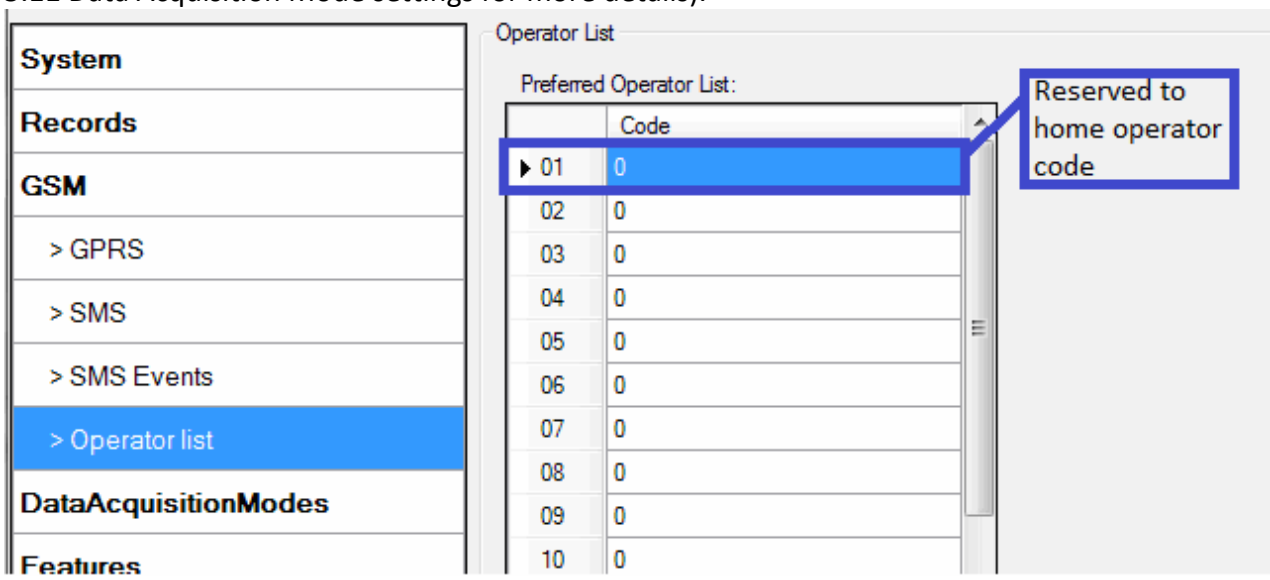

Figure 21. Operator list configuration

Note: If home operator code is written in operator list, FM device looks for all available operators, checks operator list, and connects to specified operator network. It takes few seconds. If current operator code is not written in operator list, FM device connects to SIM home operator automatically, which is faster. So we recommend to leave empty first row in operator list, because it is a faster way to catch home operator.

5.11 Data Acquisition Mode settings

Data Acquisition Modes are an essential part of FM1000 device, it is also highly configurable.

By configuration user defines how records will be saved and sent. There are three different modes: Home, Roaming and Unknown. All these modes with configured data acquisition and send frequencies depend on home or roaming operator and are switched when GSM operator changes from home to roaming or vice versa (e.g. vehicle passes through country boarder). Unknown profile switches on when device can't find home operator or no operator reachable from roaming list.

If current GSM operator is defined as Home Operator, device will work in Home[4] Data Acquisition mode, if current operator is defined as Roaming Operator, device will work in Roaming Data Acquisition mode, and if device can't find home operator or no operator reachable from roaming list device will work in Unknown Acquisition mode.

This functionality allows having different AVL records acquire and send parameters values when object is moving or stands still. Vehicle moving or stop state is defined by Mode Switch parameter. There are 3 ways for FM1000 to switch between Vehicle on Stop and Vehicle Moving modes see section.

FM1000 allows having 6 different modes. Operational logic is shown in Figure 19 Data Acquisition Mode

Note: If SIM card is not inserted device works in Unknown mode.

[4] Home operator is searched automatically from 00.02.14 rev.02 firmware version.

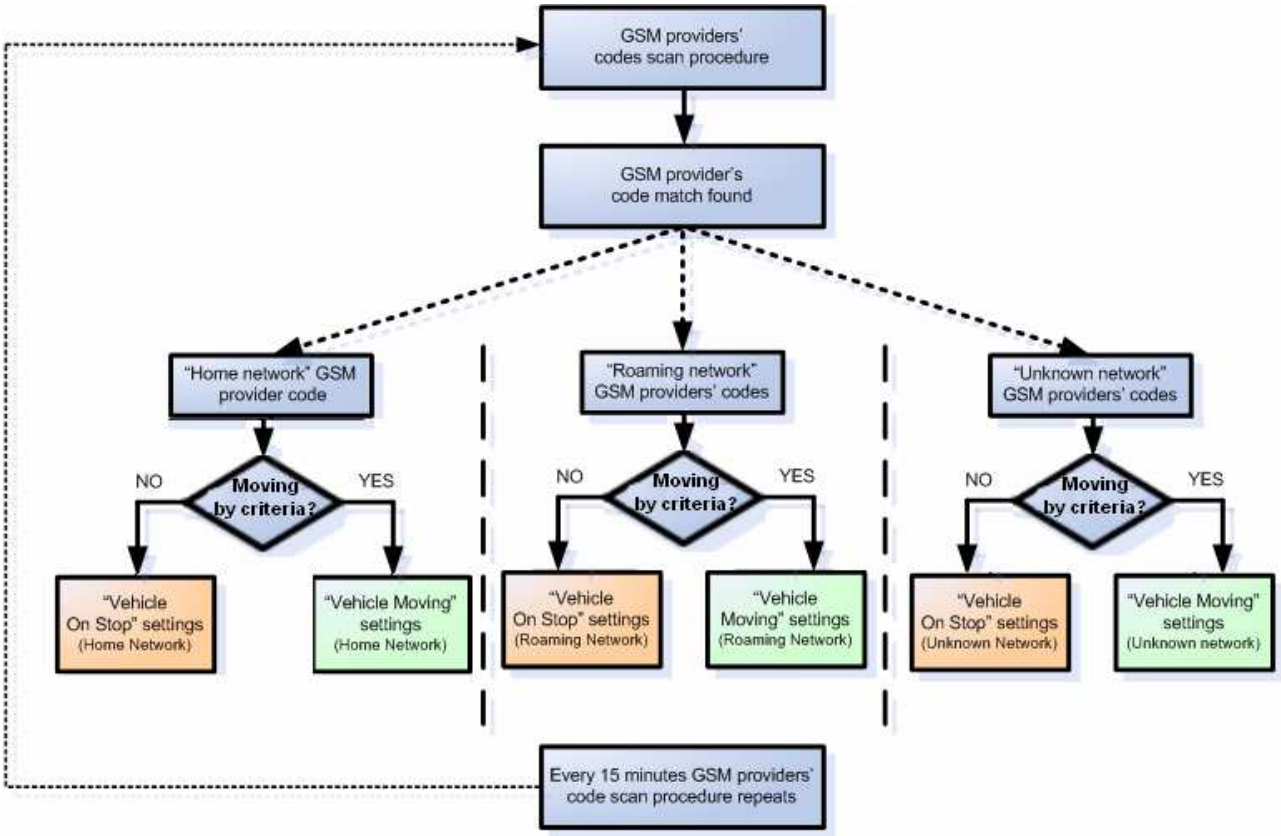

Figure 19 Data Acquisition Mode Operational logic

Operator search is performed every 15 minutes. Depending on current GSM operator, Home, Roaming or Unknown mode can be changed faster than every 15 minutes. This process is separate from operator search. Movement criteria are checked every second.

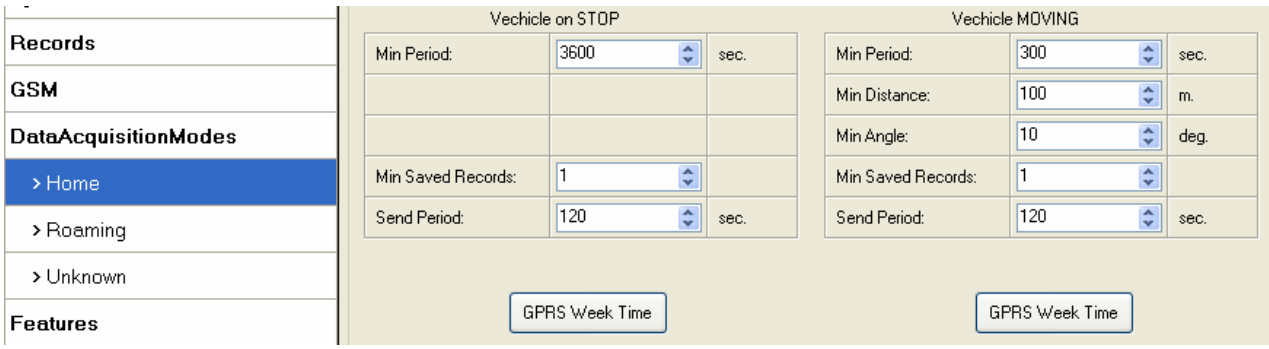

Figure 20 Data Acquisition Mode configuration

'Min Saved Records' defines minimum number of coordinates and I/O data that should be transferred with one connection to server. If FM1000 does not have enough records to send to server, it will check again after time interval defined in 'Sending Period'.

Send period – GPRS data sending to server period. Module makes attempts to send collected data to server every defined period. If it does not have enough records (depends on parameter Min. Saved Records described above), it tries again after defined time interval.

GPRS Week Time tab – most GSM billing systems charge number of bytes (kilobytes) transmitted per session. During the session, FM1000 makes connection and transmits data to a server. FM1000 tries to handle the session as much as possible; it never closes session by itself. Session can last for hours, days, weeks or session can be closed after every connection in certain GSM networks – this depends on GSM network provider. GPRS Context Week Time defines session re-establish schedule if session was closed by network. New GPRS context is opened if time is 10 minutes till time checked in table. Therefore if all boxes are checked, FM1000 is able to open new connection anytime. At scheduled time match FM1000 checks for GPRS session activity. If GPRS session is alive, FM1000 sends data to server according to Send period parameter. If it is not, FM1000 checks if it is able to re-establish the session.

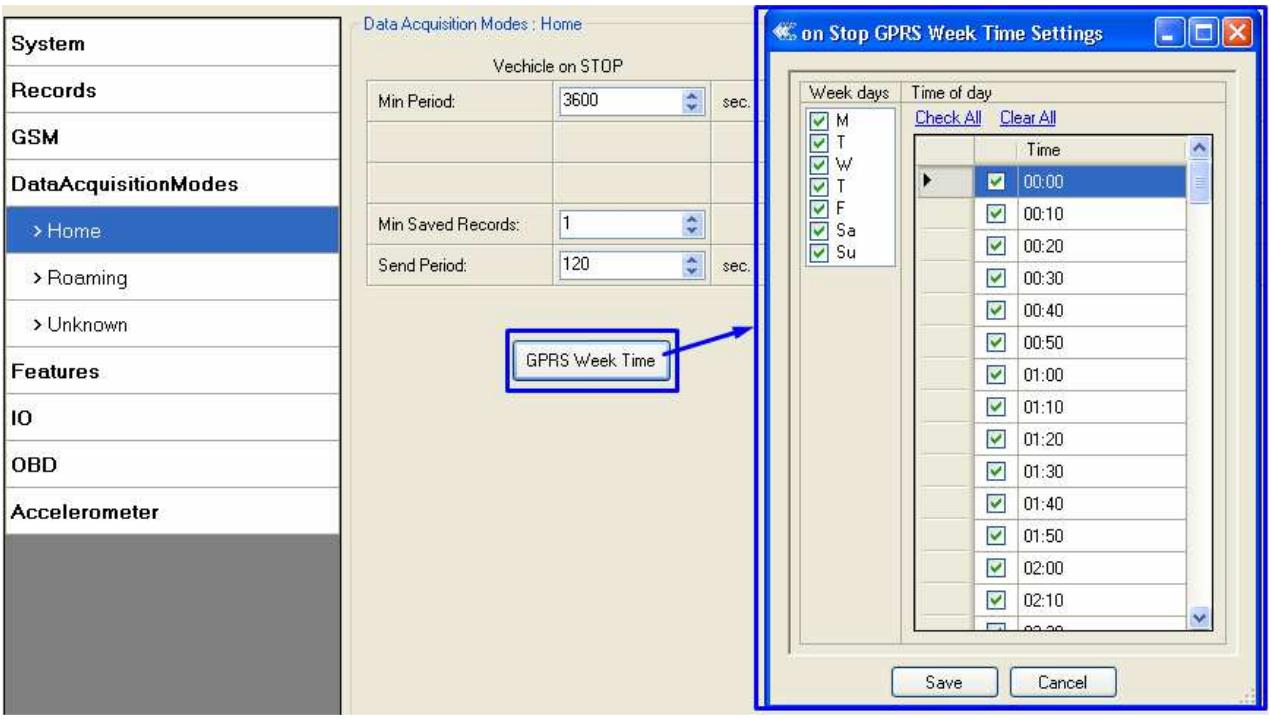

Figure 21 GPRS Week Time configuration

Device checks if the time between last saved record and current time is equal or higher than Time based acquire interval. If so, FM1000 saves record to memory. If not, FM1000 checks if the distance from last record to current record is equal or higher than Distance based acquire interval. If so, saves the record to memory. If not and speed is higher than 10km/h, then FM1000 checks if angle difference between last record and current record is equal or higher than Angle based acquire value. If so, saves the record to memory. These checks are performed every second.

Note: Keep in mind that FM1000 operates in **GMT:0** time zone, without daylight saving.

FM1000 is able to collect records using three methods at the same time: time, distance and angle based data acquisition:

Time based data acquiring (Min. period) – records are being acquired every time when defined interval of time passes. Entering zero disables data acquisition depending on time.

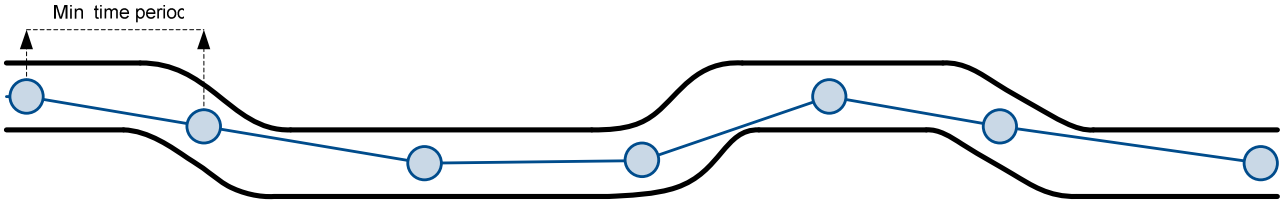

Distance based data acquiring (Min. distance) – records are being acquired when the distance between previous coordinate and current position is greater than defined parameter value. Entering zero disables data acquisition depending on distance.

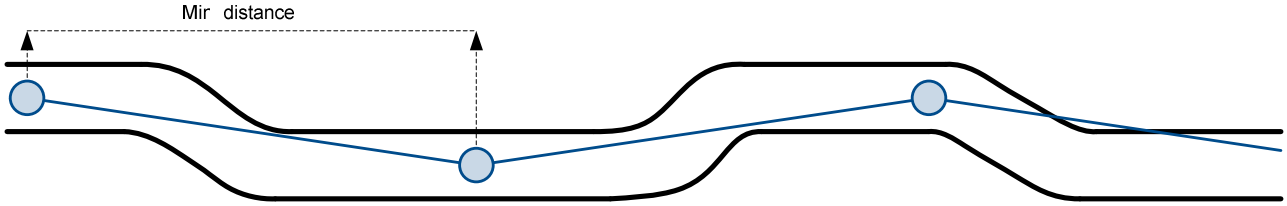

Angle based data acquiring (Min. angle) – records are being acquired when angle difference between last recorded coordinate and current position is greater than defined value. Entering zero disables data acquisition depending on angle.

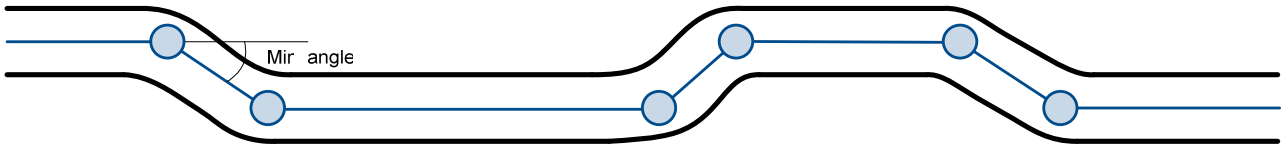

Features settings

5.11.1 Scenarios settings

In Scenarios window two different scenarios (Green driving and Overs speeding), Excessive Idling Detection and Jamming Detection parameters are available.

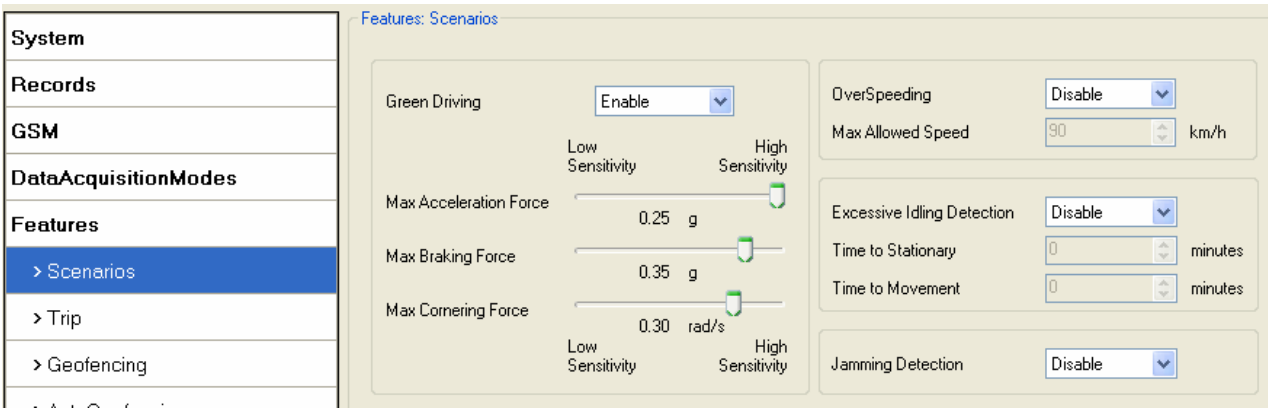

Figure 22 Scenarios configuration

Green Driving. Eventual Record is generated when driving over allowed (configured) parameters.

Over Speeding. Eventual Record is generated when driving over allowed (configured) speed and returning to normal speed.

Excessive Idling Detection. If ignition is ON and no movement, event will be generated when TMO reached. User can enable this functionality, select timeouts for stationary time and for movement time.

Jamming Detection. User can select Jamming detection sensitivity (RSSI threshold): Low, Normal, High and Disable this functionality.

5.11.2 Trip settings

If OBD data and PIDs is available, odometer value will be calculated from OBD, if not – from GPS.

Trip window offers user to configure Trip feature. If Trip is enabled configuration of parameters are enabled.

Start Speed – GNSS speed has to be greater than the specified Start Speed in order to detect Trip Start.

Ignition Off Timeout – timeout to wait if ignition was off, to detect Trip stop.

Distance mode – user can select odometer distance counting mode - Between Records (from GPS), Continuous (from GPS) or Continuous (from OBD). Continuous distance counting – **Trip distance** is going to be counted continuously (**from Trip start to Trip stop**). This value is written to I/O Odometer value field. When Trip is over and next Trip begins, Odometer value is reset to zero. When the next trip starts, device starts to count distance continuously from zero.

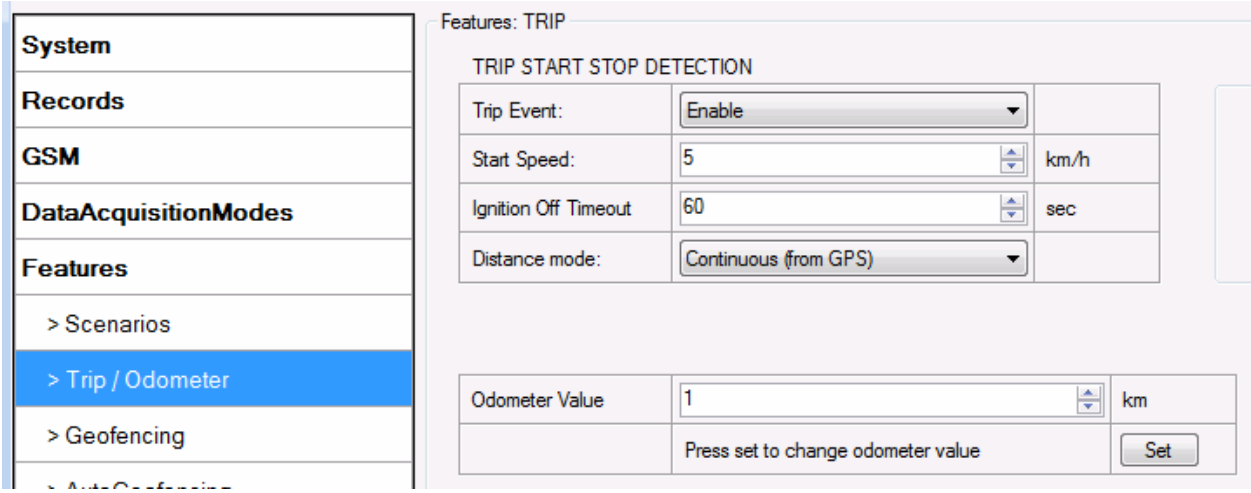

Figure 23 Trip configuration

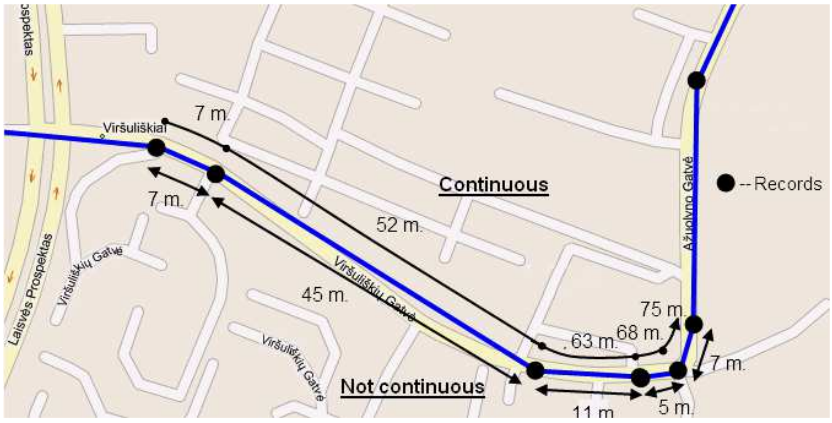

Figure 24 Trip continuous distance counting parameter example

User can configure vehicle's real odometer value. This value will be incremented by odometer functionality. If FM1000 is used in another vehicle, the new value should be entered and synchronization reset by pressing set button.

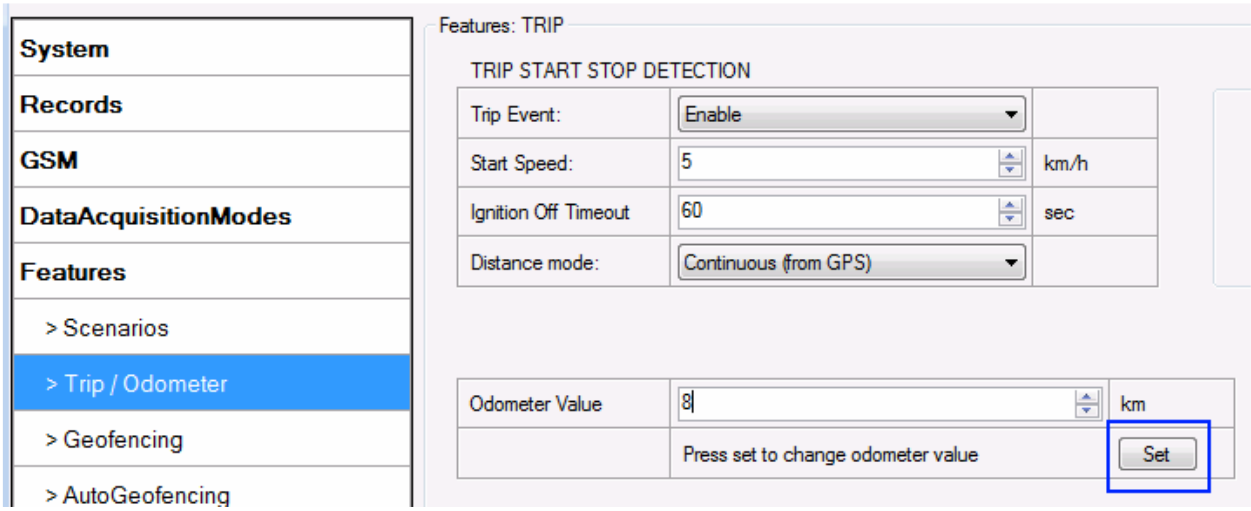

Figure 25 Odometer value configuration

5.11.3 Geofencing settings

FM1000 has 5 configurable Geofence zones and it can generate an event when defined Geofence zone border is crossed.

Frame border – frame border is an additional border around Geofence zone. It is additional area around defined zone used to prevent false event recording when object stops on the border of the area and because of GNSS errors some records are made inside area and some – outside. Event is generated only when both borders are crossed. See **figure 26** for details: blue track is considered to have entered the area while red track is not.

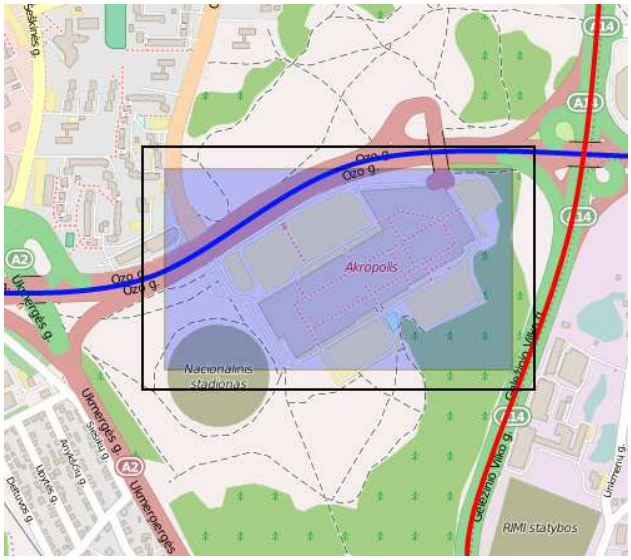

Figure 26 Geofence border

Shape – can be rectangle or circle.

Priority – priority of Geofence event: low, high or panic. These levels define priority of event information sending to server. See I/O element description for more details about priorities.

Generate event (On entrance, On exit, On Both) – choose when record will be generated;

X1 – geofence zone left bottom corner X coordinate (longitude);

Y1 – geofence zone left bottom corner Y coordinate (latitude);

X2 or R – geofence zone upper right corner X coordinate (longitude) or radius of circle when Circular zone is used (radius in meters);

Y2 – geofence zone upper right corner Y coordinate (latitude).

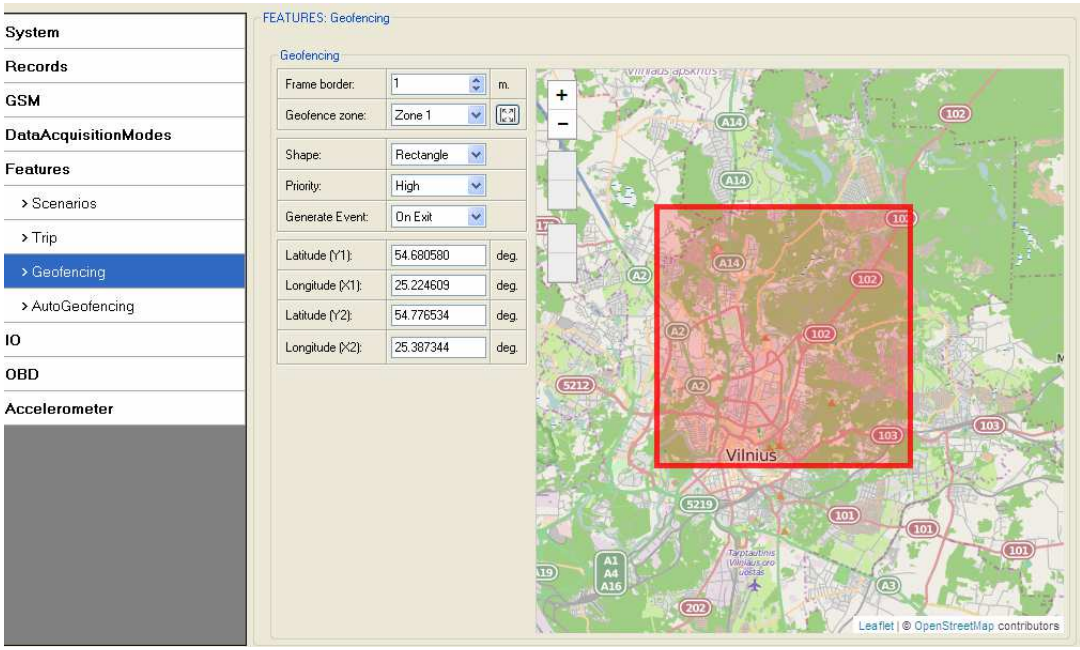

Figure 27 Geofence configuration

5.11.4 AutoGeofencing settings

AutoGeofence – the last known position after movement = off ("X on Stop Mode"). If your car's being taken away – you can be notified. The shape and size of the geofence zones are parameters. It is possibility to state whether entering in or out of the geofence triggers an asynchronous message.

AutoGeofencing option can be configured by following parameters visible in figure 28 below.

Activate – Enable or Disable AutoGeofence functionality.
Activation TMO – Time period before Geofence is activated after vehicle stops.
Priority – Priority of generated event, which will be applied to saved record.
Enter Event – Event generation on Geofence entrance.
Exit Event – Event generation on Geofence exit.
On Both – Event generation on Geofence entrance Or exit.

Note that AutoGeofencing does not require entering coordinates, instead it requires GNSS visibility. If vehicle stopped and activation timeout has passed, an AutoGeofence will be created around vehicle's last position with set Radius value. AutoGeofence event generation works the same as Geofencing mentioned above.

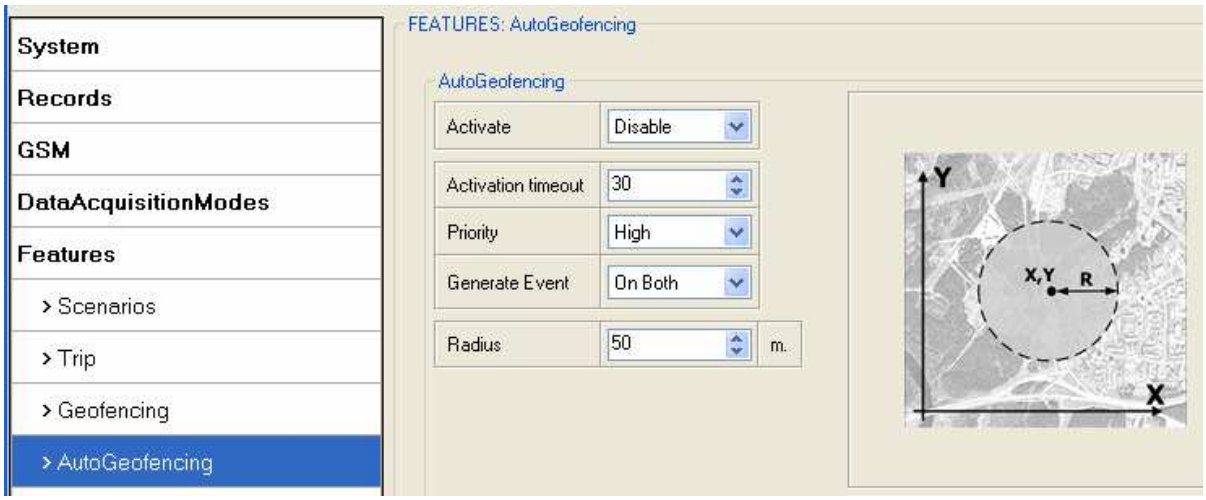

Figure 28 AutoGeofence configuration

Note: FM1000 operates in GMT:0 time without daylight saving.

5.12 I/O settings

When no I/O element is enabled, AVL packet comes with GNSS information only. After enabling I/O element(s) AVL packet along with GNSS information contains current value(s) of enabled I/O element.

Nr.	Name	Description
1	Ignition	Logic: 0 / 1
2	External Voltage	Voltage: mV, 0 – 30 V
3	GPS Speed	GPS speed: km/h
4	Trip Distance	Distance between trip start and trip stop: m
5	Total Distance	Total driven distance: km
6	GSM Signal	GSM signal level value in scale 1 – 5
7	Movement	0 – not moving, 1 – moving.
8	Battery Voltage	Battery voltage: mV
9	Deep sleep	0 – not deep sleep mode, 1 – deep sleep mode
10	Battery Current	Battery current: mA
11	Data Mode	0 – home on stop, 1 – home on move, 2 – roaming on stop, 3 – roaming on move, 4 – unknown on stop, 5 – unknown on move
12	Active GSM Operator	Currently used GSM Operator code
13	GSM Cell ID	GSM base station ID
14	GSM Area Code	Location Area code (LAC), it depends on GSM operator. It provides unique number which assigned to a set of base GSM stations. Max value: 65536
15	GPS HDOP	Probability * 10; 0-500
16	GPS PDOP	Probability * 10; 0-500
Eventual I/O elements (generate and send record to server only if appropriate conditions are met)		
17	Geozone 01	Event: 0 – target left zone, 1 – target entered zone
18	Geozone 02	Event: 0 – target left zone, 1 – target entered zone
19	Geozone 03	Event: 0 – target left zone, 1 – target entered zone
20	Geozone 04	Event: 0 – target left zone, 1 – target entered zone
21	Geozone 05	Event: 0 – target left zone, 1 – target entered zone
22	Auto geofence	Event: 0 – target left zone, 1 – target entered zone
23	Trip	1 – trip start, 0 – trip stop
24	Greendriving type	1 – harsh acceleration, 2 – harsh braking, 3 – harsh cornering
25	Greendriving value	Depending on green driving type: if harsh acceleration or braking – g*100 (value 123 -> 1.23g), if harsh cornering – degrees (value in radians)
26	Overspeeding	At over speeding start km/h, at over speeding end km/h
27	Jamming	1 – Jamming started, 0 – Jamming ended
28	Excessive Idling	1 – Idling started (stationary), 0 – Idling ended (moving after stationary)

Table 3 Available I/O elements

There are two types of operations with Permanent I/O elements: simple monitoring and event generating. Monitoring method is used when current I/O information needed with regular GNSS coordinates. Event generating method is used when additional AVL packet is needed when current value of I/O exceeds predefined High and Low levels. I/O settings allow defining I/O event criteria.

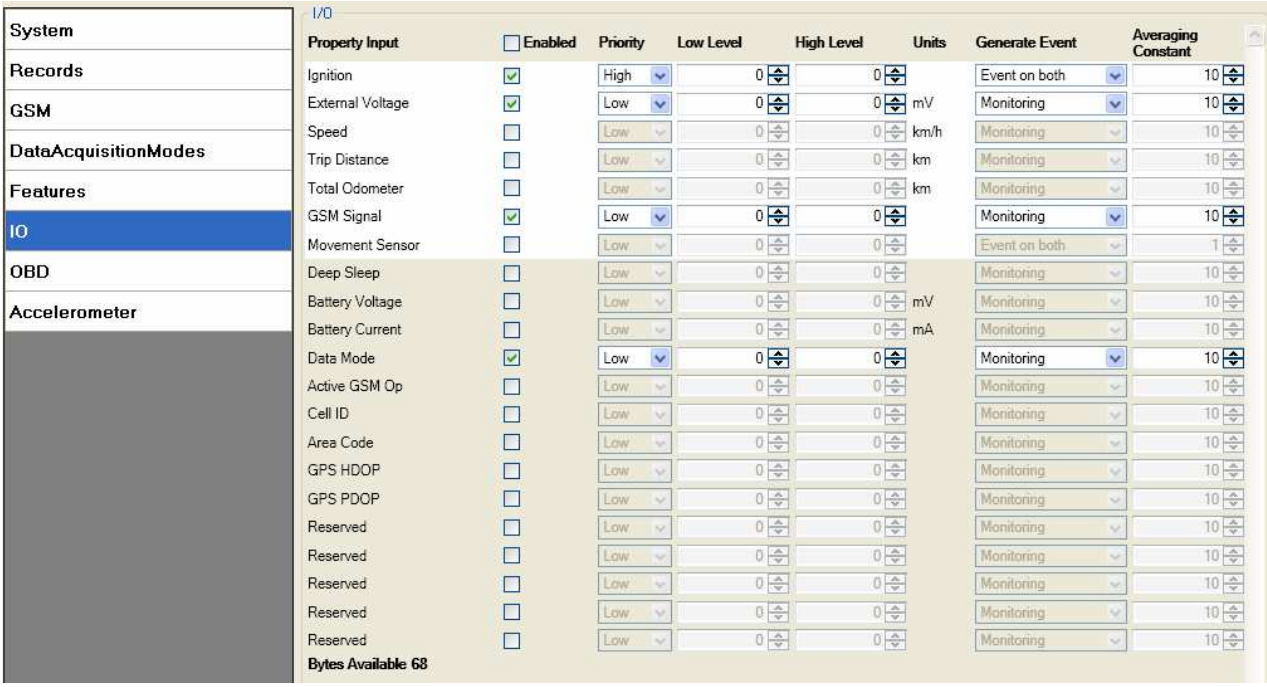

Figure 29 I/O settings

Enabled or disabled field – allows enabling I/O element so it is added to the data packet and is sent to the server. By default only main I/O elements are.

Priority (AVL packet priority) can be low, high or panic. Regular packets are sent as Low priority records. When low priority event is triggered, FM1000 makes additional record with indication that the reason for that was I/O element change. When High priority is selected, module makes additional record with high priority flag and sends event packet immediately to the server by GPRS. Panic priority triggers same actions as high priority, but if GPRS fails, it sends AVL packet using SMS mode if SMS data sending is **enabled in SMS settings**.

High and Low levels – define I/O value range. If I/O value enters or exits this range, FM1000 generates event. “Generate event” parameter defines when to generate event – when value enters defined range, exits it or both.

Averaging constant – it is an I/O event delay parameter. In some applications there is no need to generate events on every I/O range enter/exit immediately. Sometimes it is necessary to wait some time interval before event generating. Averaging constant allows setting I/O event delay (averaging). If I/O value is entering or leaving predefined range, it must have same value for Averaging constant time. 1 Averaging constant value equals about 100 milliseconds.
Param = AvgConst(sek) * 10. For example, Value 3 = 300ms.

In Deep Sleep mode there is no Averaging.

Note: I/O element's "Movement" Averaging constant is interpreted as Start Move Timeout in seconds (from 1 to 59).
Start Move Timeout – is a time interval required for accelerometer to be in the moving state, to consider vehicle as moving.

5.12.1 Event Generating

Events happen when the value of enabled I/O intersects thresholds (enter, exit or on both) predefined by High and Low level thresholds. Table below defines all available values of I/O settings.

Setting	Value
Priority	low, high
High level	maximum threshold
Low level	minimum threshold
Generate event	on interval enter, on interval exit, on both enter and exit
Average constant	$1 – 2^{32}$ (4 Bytes)

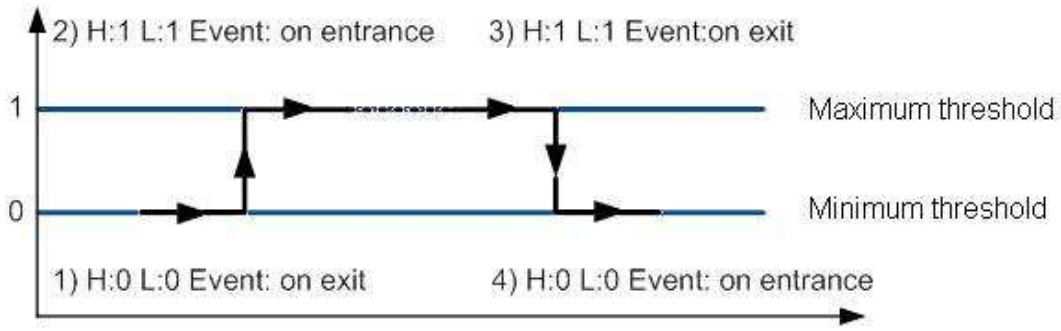

Figure 30 Digital Input event generation example

5.12.2 Hysteresis

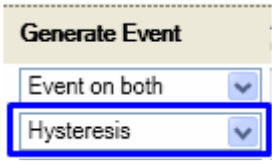

Figure 31 Hysteresis parameter configuration

I/O elements can generate events according to hysteresis algorithm. If I/O event operand "Hysteresis" is selected, events will be generated as it is shown in the illustration below (I/O speed is taken as I/O value example):

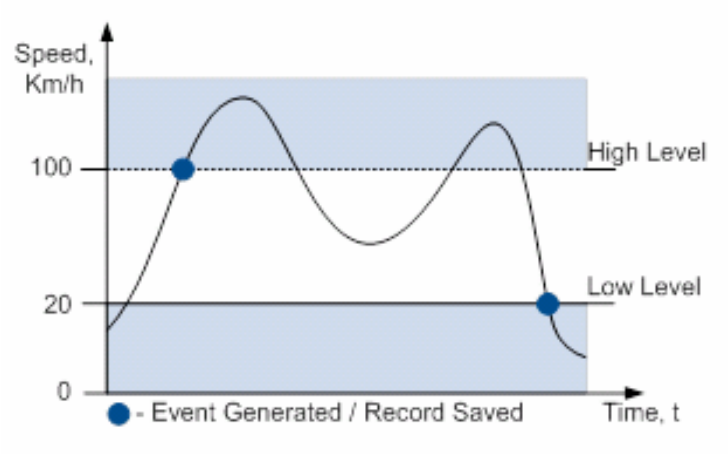

Figure 32 Event generation according hysteresis algorithm

5.13 OBD functionality description

5.13.1 Supported OBD protocols

1. SAE J1850 PWM (41.6 kbaud);
2. SAE J1850 VPW (10.4 kbaud);
3. ISO 9141-2 (5 baud init, 10.4 kbaud);
4. ISO 14230-4 KWP (5 baud init, 10.4 kbaud);
5. ISO 14230-4 KWP (fast init, 10.4 kbaud);
6. 15765-4 CAN (11 bit ID, 500 kbaud);
7. ISO 15765-4 CAN (29 bit ID, 500 kbaud);
8. ISO 15765-4 CAN (11 bit ID, 250 kbaud);
9. ISO 15765-4 CAN (29 bit ID, 250 kbaud);
10. SAE J1939 CAN (29 bit ID, 250 kbaud).

5.13.2 Data

Data is saved as I/O elements. OBD I/O elements must be enabled using configurator. All OBD elements are configured in same logic as other I/O property elements.

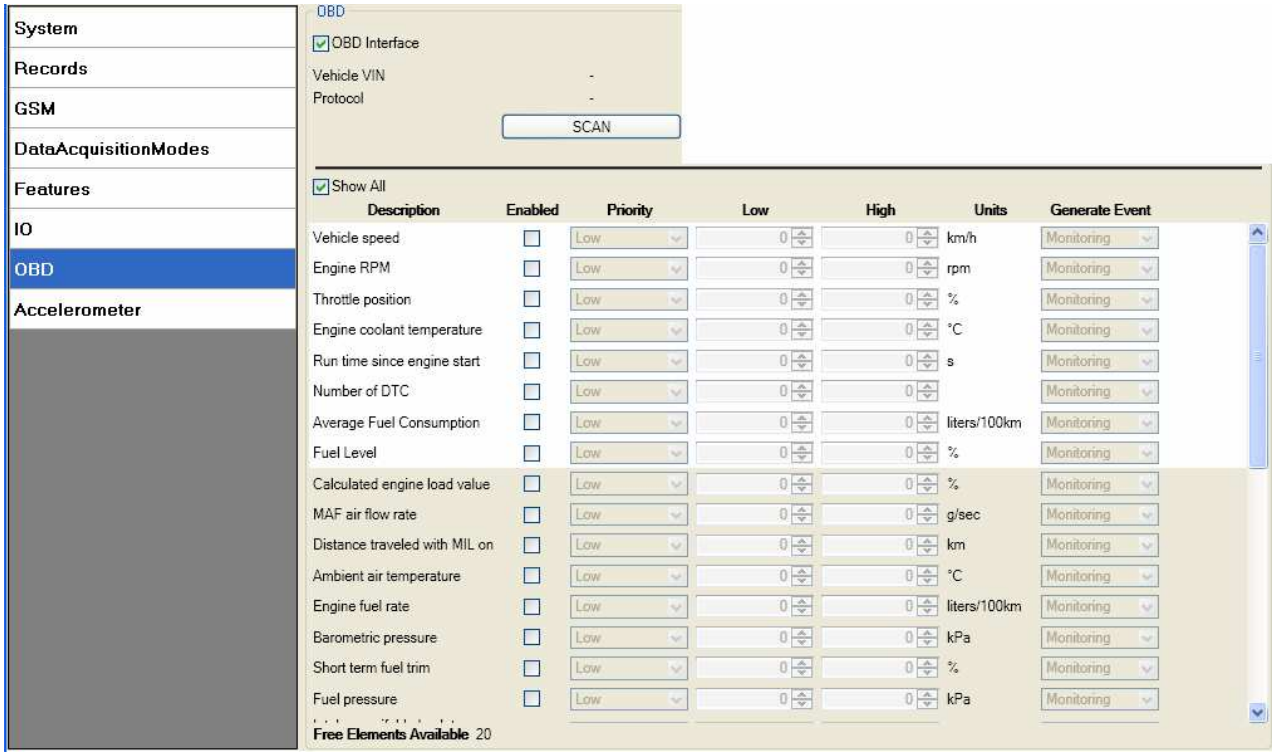

Figure 33 available OBD IO elements on configurator window

OBD IO list:

Nr.	Name	Min	Max	Unit	Size	Multiplier
1	“Number of DTC”	0	255		1B	x1
4	“Calculated engine load value”	0	100	%	1B	x1
5	“Engine coolant temperature”	-40	215	°C	1B	x1
6	“Short term fuel trim 1”	-100	99	%	1B	X1
10	“Fuel pressure”	0	765	kPa	2B	X1
11	“Intake manifold absolute pressure”	0	255	kPa	1B	X1
12	“Engine RPM”	0	16383	rpm	2B	X1
13	“Vehicle speed”	0	255	km/h	1B	X1
14	“Timing advance”	-64	63	°	1B	X1
15	“Intake air temperature”	-40	215	°C	1B	X1
16	“MAF air flow rate”	0	65535	g/s	2B	X0.01
17	“Throttle position”	0	100	%	1B	X1
31	“Run time since engine start”	0	65535	s	2B	X1
33	“Distance traveled MIL on”	0	65535	km	2B	X1
34	“Relative fuel rail pressure”	0	51772	kPa	2B	X0.1
35	“Direct fuel rail pressure”	0	65535	kPa	2B	X0.1
44	“Commanded EGR”	0	100	%	1B	X1
45	“EGR error”	-100	99	%	1B	X1
47	“Fuel level”	0	100	%	1B	X1
49	“Distance traveled since codes cleared”	0	65535	km	2B	X1
51	“Barometric pressure”	0	255	kPa	1B	X1
66	“Control module voltage”	0	65535	mV	2B	X1

67	“Absolute load value”	0	25700	%	2B	X1
70	“Ambient air temperature”	-40	215	°C	1B	X1
77	Time run with MIL on	0	65535	min	2B	X1
78	“Time since trouble codes cleared”	0	65535	min	2b	X1
89	“Absolute fuel rail pressure”	0	65535	kPa	2B	X10
91	“Hybrid battery pack remaining life”	0	100	%	1B	X1
92	“Engine oil temperature”	-40	210	°C	1B	X1
93	“Fuel injection timing”	-21000	30199	°	2B	X0.01

Table 4 OBD IO list

Note: Available OBD elements depend on vehicle’s brand, model and year of manufacturing.
More information on OBD PIDs: http://en.wikipedia.org/wiki/OBD-II_PIDs

5.14 Accelerometer

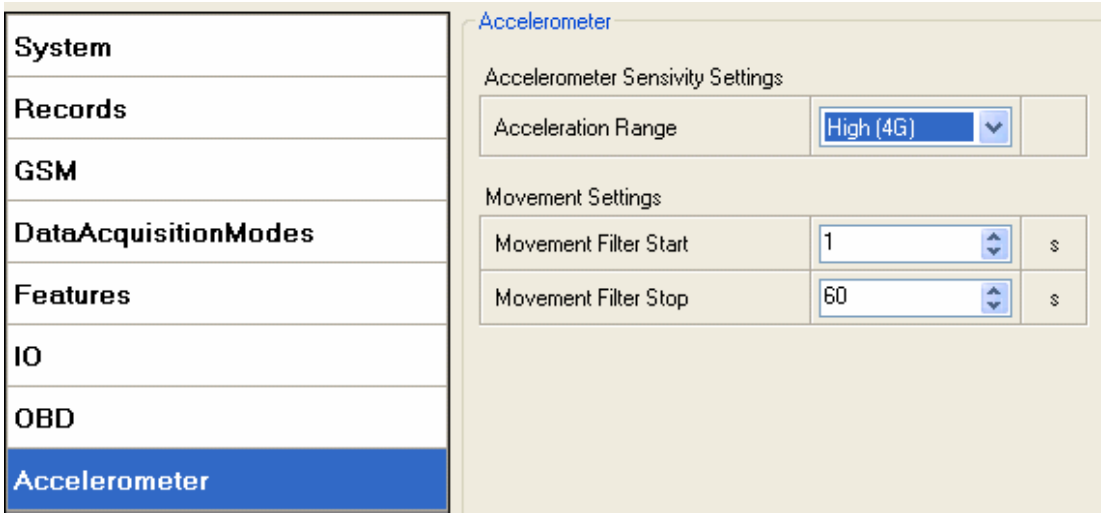

Figure 35 Accelerometer configuration

FM1000 has inbuilt accelerometer which can easily be configured for individual needs.

Acceleration range specifies measurement range for accelerometer. The smaller the range the more precisely configuration can be set. Bigger ranges are only acceptable for harsh acceleration or crash detection.

6 SMS COMMAND LIST

Read chapter **5.10.2 SMS** to learn how to construct a proper SMS message and send it to FM1000 device. All commands are case sensitive. While FM1000 operates in Deep Sleep mode and user tries to send SMS message it cannot arrive to FM1000 device, because GSM/GPRS module is disabled most of the time (wake up depends on Send Period parameter). FM1000 will receive the SMS when it wakes up (exits deep sleep mode).

6.1 SMS command list

Command	Description	Response
getstatus	Modem Status information	Yes
getweektime	Current device time, Day of Week and amount of minutes passed since start of week	Yes
getops	List of currently available GSM operator	Yes
getcfgtime	Date and Time of last successful configuration	Yes
ggps	Google Map Link information	Yes
getgps	Current GNSS data and time	Yes
getinfo	Device runtime system information	Yes
getver	Device / Modem / Code version information	Yes
allver	Device / HW version information	
cpureset	Reset CPU	No
resetprof	Reset all FLASH1 profile configuration to default profile	Yes
deleterecords	Delete all records saved on FLASH	Yes
getio	ReaMS Event Predefined digital input 1	Yes
readio #	Readout input value according entered ID, # - ID value	Yes
getparam #	Readout parameter value according entered ID. # - ID value.	Yes
setparam # #	Set parameter value according entered ID and Value. 1.# - ID value. 2.# - New Parameter Value	Yes
flush #,#,#,#,#,#,#	Initiates all data sending to specified target server 1.# - IMEI 2.# - APN 3.# - LOGIN 4.# - PASS 5.# - IP 6.# - PORT 7.# - MODE (0-TCP/1-UDP)	Yes
banlist	Banned operators information	Yes
crashlog	Device last information before unexpected reset	Yes
bbread	Device debug information	Yes
delete_all_sms	Deletes all SMS	No
defevt	Reset SMS Events configuration to default	Yes
battery	Battery information	Yes
cleardtc	Clears all vehicle stored trouble codes and turns the MIL off	
obdinfo	Returns OBD info. Protocol, VIN, AdaptiveTiming value, requested PID counter, OBD application state, available vehicle PIDs, mil status, number of DTCs	Yes
faultcodes	Fault codes reading from OBD	Yes

6.1.1 getstatus

Response details	Description
Data Link	Indicate module connection to server at the moment: 0 – Not connected, 1 – connected
GPRS	Indicate if GPRS is available at the moment
Phone	Voice Call status: 0 – ready, 1 – unavailable, 2 – unknown, 3 – ringing, 4 – call in progress, 5 – asleep
SIM	SIM Status: 0-ready, 1-pin, 2-puk, 3-pin2, 4-puk2
OP	Connected to GSM Operator: numerical id of operator
Signal	GSM Signal Quality [0-5]
NewSMS	Indicate if new message received
Roaming	0 – Home Network, 1 – roaming
SMSFull	SMS storage is full? 0 – ok, 1 – SMS storage full
LAC	GSM Tower Location Area Code
Cell ID	GSM Tower Cell ID Code

Example: Data Link: 0 GPRS: 1 Phone: 0 SIM: 0 OP: 24602 Signal: 5 NewSMS: 0 Roaming: 0 SMSFull: 0 LAC: 1 Cell ID: 864

6.1.2 getweektime

Response details	Description
Clock Sync	Indicates system clock synchronization status. 0 – System is not synchronized, 1 – System synchronized
DOW	Day Of Week – indicates current day of week starting from 0 – Monday, 1 – Tuesday, etc.
Time	Indicates current GMT time
WeekTime	Indicates time in minutes starting from Monday 00:00 GMT

Example: Clock Sync: 1 DOW: 4 Time 12:58 Weektime: 6538

6.1.3 getops

Response details	Description
LIST	Returns list of current available allowed operators.

Example: GSM OP LIST: 0. 24602

6.1.4 getcfgtime

Response details	Description
Date/Time	Returns last performed configuration date and time.

Example: Last Configuration was performed on: 2010.4.15 5:45:19

6.1.5 ggps

Response details	Description
D	Date

T	Time
S	Actual Speed
C	Latitude (Last good Latitude), Longitude (Last good Longitude)
Url	Google Maps Link

Example: D:2013/7/4 T:0:0:0 S:0 C:0, 0 Url: http://maps.google.com/?q=0,0&om=1speed:0

6.1.6 getgps

Response details	Description
GNSS	Indicates valid (1) or invalid (0) GNSS data
Sat	Count of currently available satellites
Lat	Latitude (Last good Latitude)
Long	Longitude (Last good Longitude)
Alt	Altitude
Speed	Ground speed, km/h
Dir	Ground direction, degrees
Date	Current date
Time	Current GMT time

Example: GNSS:1 Sat:7 Lat:54.71473 Long:25.30304 Alt:147 Speed:0 Dir:77 Date: 2007/8/24 Time: 13:4:36

6.1.7 getinfo

Response details	Description
INI	Device Initialization Time
RTC	RTC Time
RST	Restart Counter
ERR	Error Counter
SR	Number of Sent Records
BR	Number of broken records
CF	Profile CRC Fail counter
FG	Failed GPRS counter
FL	Failed link counter
UT	UPD Timeout counter
SMS	Sent SMS Counter
NOGNSS	No GNSS Timer
GNSS	GNSS receiver state. 0 – OFF, 1 – restarting, 2 – ON but no fix, 3 – ON and operational, 4 – sleep mode
SAT	Average satellites
RS	Reset Source Identification 1 – Low Power, 2 – W Watchdog, 3 – I Watchdog, 4 – Software reset, 5 – Power On, 6 – Pin Reset
MD	Data Mode state. 0 – Home and Stop, 1 – Home and Moving, 2 – Roaming and Stop, 3 – Roaming and Moving, 4 – Unknown and Stop, 5 – Unknown and Moving

Example: INI:2007/8/24 10:15 RTC:2007/8/24 12:43 RST:2 ERR:11 SR:182 BR:0 CF:0 FG:0 FL:0 UT:0 SMS:2 NOGNSS:0:0 GNSS:3 SAT:7 RS:5 MD:0

6.1.8 getver

Response details	Description
Code Ver	Firmware version
Rev	Firmware revision
Device IMEI	IMEI
Device ID	Device ID is used to detect by server which type of configuration to load
Bootloader Ver	Bootloader Version
Modem App Ver	Version of modem application

Example: FW Ver:00.06.02 R0 Device IMEI:X DeviceID:00000E BL Ver:07.01 Modem FW Ver:TM11Q_R_01.04.07.00_001 HW:FM1000 FULL GGG ST.

6.1.9 allver

Response details	Description
1	Device name
2	Firmware version
3	Firmware revision
4	IMEI
5	Firmware compile date
6	Bootloader version
7	Device ID
8	Flash Manufacturer ID
9	Flash Capacity
10	Version of modem application
11	HW revision voltage
12	GNSS module description

Example: FM10,00.06.02,0,356307044051570,Jul 6 2015,07.01,0E,EF,14,1.07.00,1373,G33_030106#,,,,,

6.1.10 getio

Response details	Description
DI1	Digital Input 1 state

Example: DI1:0

6.1.11 readio

Response details	Description
ID	I/O element ID
Value	I/O Element value

Example: I/O ID:3 Value:0

6.1.12 getparam

Read parameter value. ID consists of 3 or 4 digits. Detailed list of parameters and IDs can be found in chapter number 8 “Parameter List”

Example: ‘getparam 1245’ command will request server IP address.

6.1.13 setparam

Sets new value for parameter. ID consists of 3 or 4 digits. Detailed list of parameters and IDs can be found in chapter number 8 “Parameter List”

Example: ‘setparam 1245 127.0.0.1’ will change configured IP address.

6.1.14 flush #,#,#,#,#,#,#

Initiates all data sending by GPRS to specified target server. Comma separated parameters go as numbered:

1. # – IMEI;
2. # – APN;
3. # – GPRS LOGIN;
4. # – GPRS PASSWORD;
5. # – IP;
6. # – PORT;
7. # – MODE (0 – TCP; 1 – UDP).

Parameters are separated by comma (no spaces needed). In case you don’t need to enter parameter (Login/Pass) – do not put space, simply put comma and write next parameter.

Example: opa opa flush 356307044051570,banga,,,212.47.99.62,12050,0

Response details	Description
FLUSH SMS Accepted	FLUSH SMS Accepted
# records found on FLASH	Number of records found on FLASH
Minimum Records to Send: #	Number of minimum saved records to send
GPRS Enabled: #	State of the GPRS connection, 0 – disabled; 1 – enabled
Time Sync: #	Indicates time synchronization on the device, 0 – not synchronized; 1 – synchronized

Example: FLUSH SMS Accepted. 11 records found on FLASH. Minimum Records to Send: 1. GPRS Enabled: 1. Time Sync: 1.

6.1.15 banlist

Gives a list of all banned operators.

Example when no operators are banned: 0000.00s.0.000

6.1.16 crashlog

Gives the last information before the device has crashed for unexpected reasons. It is useful when the device acts unexpectedly or restarts for unexplained reasons.

Example if no unexpected reset: “Crash: “
Example if unexpected reset was detected: “Crash: 3051,3052,3053”.

6.1.17 defevt

This SMS command resets SMS Events configuration to default.
Example: SMS Event default parameters loaded.

6.1.18 battery

Returns FM1000 battery information.
Example: BatState: 1 FSMState: ACTIVE ChargerIC: CHARGING ExtV: 14020 BatV: 3800 BatI: 50 PCBTemp: 35.2.

6.1.19 cleardtc

Clears all vehicle stored trouble codes and turns the MIL off.
Examples: DTC cleared: OK; or: DTC cleared: ERROR.

6.1.20 obdinfo

Response details	Description
LIST of OBD info	Protocol, VIN, AdaptiveTiming value, requested PID counter, OBD application state, available vehicle PIDs, mil status, number of DTCs

Example:Protocol:5,VIN:N/A,TM:5,CNT:5,ST:OBDDATA REQUESTING,P1:0x0,P2:0x0,P3:0x0,P4:0x0,MIL:0,DTC:0,ID0

6.1.21 faultcodes

Response details	Description
LIST	Returns list of fault codes; response when no faults: “No fault codes detected.”

Example: “P0100,P0200,P0300,C0300,B0200,U0100”.

7 GPRS commands

It is possible to send commands to FM1000 using GPRS. When FM1000 sends records periodically to a server, a message could be sent from the server and FM1000 will reply to it. FM1000 has to be connected to the server in order to receive commands.

Command	Description
#GET DATAORDER	Get info about records sorting parameter
#SET DATAORDERX=Y	Set records sorting parameter, X – profile, Y – value (0/1).
#GET RECTO	Get info about records refresh timeout parameter
#SET RECTO=X	Set records refresh parameter, X = records refresh timeout
#GET VERSION	Receive firmware version
#GET NETWORK	Get GSM operator to which device is connected
#GET IMSI	Get IMSI of the device
#DO REPORT	Save a record
#DO RESET=XXX	Reset FM5302 or GPS module, XXX – FM5X or GPS

#GET ROAMINGX=Y	Get operator from the list of a certain profile, X – profile, Y – operator number in a list
#SET ROAMINGX=Y,Z	Set operator to the list of a certain profile, X – profile, Y – operator number in a list, Z – operator code
#GET REMIPX	Get IP and port number from the configuration of a certain profile, X – profile
#SET REMIPX=Y:Z	Set IP and port number to the configuration of a certain profile, X – profile no, Y – IP or domain, Z – port number
#GET AUPX	Get APN, user login and password from the configuration of a certain profile, X – profile
#SET AUPX=Y,Z,W	Set APN, user login and password to the configuration of a certain profile, X – profile, Y – APN, Z –, user login W – password
#GET REPRTX	Get MinPeriod from the configuration of a certain profile, X – profile
#SET REPRTX=Y	Set MinPeriod to the configuration of a certain profile, X – profile, Y – MinPeriod value
#GET REPDISTX	Get MinDistance from the configuration of a certain profile, X – profile
#SET REPDISTX=Y	Set MinDistance to the configuration of a certain profile, X – profile, Y – MinDistance value
#GET REPANGX	Get MinAngle from the configuration of a certain profile, X – profile
#SET REPANGX=Y	Set MinAngle to the configuration of a certain profile, X – profile, Y – MinAngle value
#GET SENDPERIODX	Get SendPeriod from the configuration of a certain profile, X – profile
#SET SENDPERIODX=Y	Set SendPeriod to the configuration of a certain profile, X – profile, Y – SendPeriod value
#GET REPMRX	Get MinRecords from the configuration of a certain profile, X – profile
#SET REPMRX=Y	Set MinRecords to the configuration of a certain profile, X – profile, Y – MinRecords value
#GET IBTNX=Y	Get iButton value from the configuration of a certain profile, X – profile, Y – number on the list
#SET IBTNX=Y,Z	Set iButton value to the configuration of a certain profile, X – profile, Y – number on the list, Z – iButton value
#GET EXTERR	Get extended errors value
#SET EXTERR=X	Set extended errors value, X – 0/1
#GET VIN	Returns vehicle VIN number
#GET FAULTCODES	Reads fault codes from OBD

There is also a possibility to send the same messages as in SMS command list (chapter 6).

Command	Description
getstatus	Modem Status information
getweektime	Current device time, Day of Week and amount of minutes passed since start of week
getops	List of currently used and available GSM operators
readops#	Emergency gsm operator readout from active profile # – 1,2,3

	1 – operators [1-20] 2 – operators [21-40] 3 – operators [41-50]
getnmeainfo	Nmea error debug sms
getcfgtime	Date and Time of last successful configuration
getgps	Current GPS data and time
loadprofile#	Load specified profile into RAM Engine Profile. # - number of profile to load
cpureset	Reset CPU
resetallprof	Reset all FLASH profiles to default profile
getver	Device / Modem / Code version information
getinfo	Device runtime system information
deleterecords	Delete all records saved on FLASH
getio	Readout digital inputs and outputs, analog inputs
readio #	Readout input value according entered ID, # - ID value
getparam #	Readout parameter value according entered ID. # – ID value.
Setparam # #	Set parameter value according entered ID and Value. 1.# – ID value. 2.# – New Parameter Value
flush #,#,#,#,#,#,#	Initiates all data sending to specified target server 1. # – IMEI 2. # – APN 3. # – LOGIN 4. # – PASS 5. # – IP 6. # – PORT 7. # – MODE (0 – TCP; 1 – UDP)
sn x [x=0;1]	Enable/disable static navigation
banlist	Banlist information
crashlog	Crash log information
delete_all_sms	Delete all read SMS
braminfo	BatRam info
getgnss	Current GNSS information
resetlimits	Resets data counters

ATTENTION!
In order to send these commands, they have to be converted to special format. How to convert to this format and for additional information on how to send GPRS commands, please contact to your local sales representative.

8 Debug mode

FM1000 is able to transmit its current state when connected to PC using USB cable. It is used to detect errors and provide information to possible solutions when operating as unexpected. Download Terminal from:

http://avl1.teltonika.lt/Downloads/Software/Terminal.zip.

After launching terminal choose baud rate 115200 and hardware control – none. Select COM port which is assigned to “Virtual COM Port”. Click on ‘Start Log’ button and save a new file. Enable DTR and then click ‘Connect’ to start receiving messages from FM1000 .

Also you can log NMEA data directly. To get NMEA data, simply enter the following command into the command field: **.log_nmea:1$0a**.

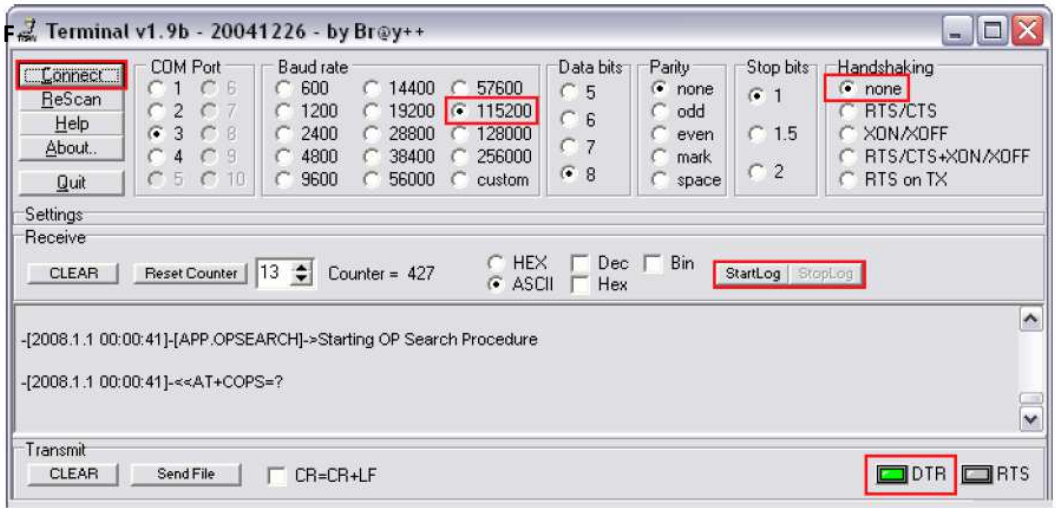

Figure 36 Terminal window for logging

9 Parameter List

9.1 Parameters value types

S8 – Signed Char
S8[*n*] – String of *n* Char
U8 – Unsigned Char
U16 – Unsigned Short
S32 – Signed Integer
U32 – Unsigned Integer
U64 – Unsigned Long Integer

9.2 System parameters

9.2.1 Sleep Mode (ID=1000)

Device has two sleep modes: sleep and deep sleep mode. While sleep is disabled (value 0) module will never enter sleep mode, in sleep mode (value 1) module reduces level of power usage by turning GNSS module to sleep, in deep sleep mode (value 2) module turns GNSS module to sleep and switch GSM module off (note, that FM1000 do not receive SMS while in deep sleep).

Minimum value	Maximum value	Recommended value	Goes with (depends on) parameters	Value type
0	2	-		U8

9.2.2 Sleep timeout (ID=1001)

Sleep timeout is time after which FM1000 goes to sleep or deep sleep if other requirements are met. It is measured in minutes.

Minimum value	Maximum value	Recommended value	Goes with (depends on) parameters	Value type

1	3000	-		U8

9.2.3 Mode Switch Source (ID=1002)

Device can operate and change its working mode according to motion detection source: ignition (value 0), movement (value 1), GNSS (value 2).

Minimum value	Maximum value	Recommended value	Goes with (depends on) parameters	Value type
0	2	-		U8

9.2.4 Ignition Source (ID=1003)

Device can operate and change its working mode according to motion detection source: Power Voltage (value 0), Digital Input 1 (value 1), movement (value 2).

Minimum value	Maximum value	Recommended value	Goes with (depends on) parameters	Value type
0	2	-	**Power Voltage Low Level (ID=1006)** **Power Voltage Level High Level (1007)**	U8

9.2.5 Static navigation settings (ID=1004)

When static navigation is enabled, FM1000 filters out GPS jumps, when it is not moving. When it is disabled, it does not make any changes to collected GPS data. 0 - disabled (default); 1 - enabled.

Minimum value	Maximum value	Recommended value	Goes with (depends on) parameters	Value type
0	1	-		U8

9.2.6 Saving/Sending without time synchronization (ID=1005)

When this feature is enabled (value = 1), then records can be saved and sent to server without time synchronization.

Minimum value	Maximum value	Recommended value	Goes with (depends on) parameters	Value type
0	1	1		U8

9.2.7 Power Voltage Low Level (ID=1006)

When ignition source is selected as Power Voltage Low level for ignition detection must be set.

Minimum value	Maximum value	Recommended value	Goes with (depends on) parameters	Value type
0	30000	-	**Ignition Source (ID=1003)** **Power Voltage Level High Level (1007)**	U16

9.2.8 Power Voltage High Level (ID=1007)

When ignition source is selected as Power Voltage High level for ignition detection must be set.

Minimum value	Maximum value	Recommended value	Goes with (depends on) parameters	Value type
0	30000	-	**Ignition Source (ID=1003)** **Power Voltage Level Low Level (1006)**	U16

9.2.9 LED Indication (ID 1008)

Parameter enables/disables led indication. 0 – disabled; 1- enabled (default).

Minimum value	Maximum value	Recommended value	Goes with (depends on) parameters	Value type
0	1	-		U8

9.2.10 Battery charge mode (ID 1009)

Parameter sets battery charge mode. 0 – on need (default), 1- after ignition on.

Minimum value	Maximum value	Recommended value	Goes with (depends on) parameters	Value type
0	1	-		U8

9.3 Records parameters

9.3.1 Sorting (ID=1010)

Record sorting parameter is responsible for record sorting order. Value of 0 arranging data starting from the newest, while value of 1 arranging data starting from the oldest.

Minimum value	Maximum value	Recommended value	Goes with (depends on) parameters	Value type
0	1	-		U8

9.3.2 Active Data Link Timeout (ID=1011)

Defines for how many seconds device will keep connection to the server after successful data transfer while waiting for a new record.

Minimum value	Maximum value	Recommended value	Goes with (depends on) parameters	Value type
0	259200	-		U32

9.3.3 Server Response Timeout (ID=1012)

Defines time period (in seconds) for server response to sent records.

Minimum value	Maximum value	Recommended value	Goes with (depends on) parameters	Value type
1	300	-		U8

ATTENTION! Some GSM operators may disconnect the device from an active data link if the device doesn't send any data for a very long time, even if active data link timeout is set to maximum value. The amount of time that an operator keeps the link open depends solely on the operator. For example, if active data link timeout is set to maximum, 259200 seconds (72 hours), and the device sends data to server every 86400 seconds (24 hours), the operator might disconnect the link earlier and the device will have to connect to the server anew. This may cost extra, depending on the operator GPRS data charge. It is strongly recommended, when using active data link timeout, that data sending to the server should not be very rare (24 hours or more). If data sending is more frequent, then the operator will not disconnect the device form the server.

9.4 GSM parameters

9.4.1 GPRS content activation (ID=1240)

Parameter allows or does not allow GPRS usage. If GPRS is not allowed value is 0, if GPRS is allowed value is 1.

Minimum value	Maximum value	Recommended value	Goes with (depends on) parameters	Value type
0	1	-	**APN Name (ID=1242)** **APN username (ID=1243)** **APN Password (ID=1244)**	S8

9.4.2 APN Name (ID=1242)

Parameter defines GPRS Access Point Name.

Minimum value	Maximum value	Recommended value	Goes with (depends on) parameters	Value type
Empty	32 char string	-	**GPRS content activation (ID=1240)** **APN username (ID=1243)** **APN Password (ID=1244)**	S8[32]

9.4.3 APN username (ID=1243)

Parameter defines APN username. In case operator does not use username for login, value should be empty.

Minimum value	Maximum value	Recommended value	Goes with (depends on) parameters	Value type
Empty	30 char string	-	**GPRS content activation (ID=1240)** **APN Name (ID=1242)**	S8[30]

			APN Password (ID=1244)	

9.4.4 APN Password (ID=1244)

Parameter defines APN password. In case operator does not use password for login, value should be empty.

Minimum value	Maximum value	Recommended value	Goes with (depends on) parameters	Value type
Empty	30 char string	-	**GPRS content activation (ID=1240)** **APN Name (ID=1242)** **APN username (ID=1243)**	S8[30]

9.4.5 Main Server Domain (ID=1245)

Parameter defines AVL data destination server IP address for main server. Example: 212.47.99.62.

Minimum value	Maximum value	Recommended value	Goes with (depends on) parameters	Value type
0	50 char string	-	**GPRS content activation (ID=1240)** **Main Server Domain (ID=1245)**	S8[16]

9.4.6 Backup Server Domain (ID=1241)

Parameter defines AVL data destination server IP address for backup server.

Minimum value	Maximum value	Recommended value	Goes with (depends on) parameters	Value type
0	50 char string	-	**GPRS content activation (ID=1240)** **Main Server Domain (ID=1245)**	S8[16]

9.4.7 Target Main Server Port (ID=1246)

Parameter defines AVL data destination main server port number. Example: 12050.

Minimum value	Maximum value	Recommended value	Goes with (depends on) parameters	Value type
Empty	65535	-	**GPRS content activation (ID=1240)** **Backup Server Domain (ID=1241)** **Target Main Server Port (1246)** **GPRS content activation (ID=1240)** **Main Server Domain (ID=1245)**	U16

9.4.8 Target Backup Server Port (ID=1248)

Parameter defines AVL data destination backup server port number.

Minimum value	Maximum value	Recommended value	Goes with (depends on) parameters	Value type
Empty	65535	-	**GPRS content activation (ID=1240)** **Backup Server Domain (ID=1241)** **Target Main Server Port (1246)** **GPRS content activation (ID=1240)** **Main Server Domain (ID=1245)**	U16

9.4.9 Protocol (ID=1247)

Parameter defines GPRS data transport protocol for main server. Module can use TCP or UDP transport protocol to send data to server. For TCP protocol value is 0, for UDP protocol value is 1.

Minimum value	Maximum value	Recommended value	Goes with (depends on) parameters	Value type
0	1	-	**GPRS content activation (ID=1240)**	U8

9.4.10 Backup Server Protocol (ID=1249)

Parameter defines GPRS data transport protocol for backup server. Module can use TCP or UDP transport protocol to send data to server. For TCP protocol value is 0, for UDP protocol value is 1.

Minimum value	Maximum value	Recommended value	Goes with (depends on) parameters	Value type
0	1	-	**GPRS content activation (ID=1240)**	U8

9.4.11 SMS Login (ID=1252)

User login is used to ensure module security. Used in every SMS that is sent to device. Example: ba321.

Minimum value	Maximum value	Recommended value	Goes with (depends on) parameters	Value type
Empty	5 char	-	**SMS Password (ID=1253)**	S8[5]

9.4.12 SMS Password (ID=1253)

User password is used to ensure module security. Used in every SMS that is sent to device. Example: ab123.

Minimum value	Maximum value	Recommended value	Goes with (depends on) parameters	Value type
Empty	5 char	-		S8[5]

9.4.13 SMS data sending settings (ID=1250)

Parameter allows or does not allow sending AVL data using binary SMS. If SMS use is not allowed value is 0 and 1 if SMS use is allowed.

Minimum value	Maximum value	Recommended value	Goes with (depends on) parameters	Value type
0	1	-		S8

9.4.14 Authorized phone numbers (ID=1260-1269)

If at least one number is entered then only those number can send messages to device. The list is also checked in Location by call function. Number must be entered without “+” or “00”.

Example: 37060012346.

Minimum value	Maximum value	Recommended value	Goes with (depends on) parameters	Value type

1 digit	16 digits	-		S8[17]

If SMS data sending is enabled (ID=1250) first value in a list is server GSM number. The SMS with panic priority will be sent.

9.4.15 SMS Event PreDefined Numbers (ID=150-159)

In this field are written GSM numbers, to which will be sent "Event SMS" text message. Number must be entered without "+" or "00".

Example: 37060012346.

Minimum value	Maximum value	Recommended value	Goes with (depends on) parameters	Value type
1 digit	16 digits	-		S8[17]

9.4.16 Location by Call (ID=1251)

User can select what to do with incoming call: 0-Do nothing (default), 1-Just hang up, 2-hang up with position SMS.

Minimum value	Maximum value	Recommended value	Goes with (depends on) parameters	Value type
0	2	-		S8[17]

9.4.17 Operator List (ID=1271)

Parameter defines operator list. According to this list module selects operator in home and roaming network. GSM operator codes are comma separated, example: 24601, 24602, 24705…24503.

Minimum value	Maximum value	Recommended value	Goes with (depends on) parameters	Value type
Empty	7 digits	-		U32

9.5 Data Acquisition Modes parameters

9.5.1 Home Network GSM operator code "Vehicle on STOP" parameters

9.5.1.1 Min Period (ID=1540)

This parameter indicates time interval in seconds in order to acquire new record. If value is 0 it means no records by min period will be saved.

Minimum value	Maximum value	Recommended value	Goes with (depends on) parameters	Value type
0	2592000	-		U32

9.5.1.2 Min Saved Records (ID=1543)

This parameter defines minimum number of records in one data packet that can be sent to server. It has higher priority than Data Send Period (ID=1544).

Minimum	Maximum	Recommended	Goes with (depends on)	Value

value	value	value	parameters	type
1	255	1	GPRS Week Time (ID=1545)	U8

9.5.1.3 Send Period (ID=1544)

This parameter indicates frequency (time interval in seconds) of sending data to server.

Minimum value	Maximum value	Recommended value	Goes with (depends on) parameters	Value type
0	2592000	-	Min Saved Records (ID=1543) GPRS Week Time (ID=1545)	U32

9.5.1.4 GPRS Week Time (ID=1545)

This parameter manages when it is allowed to open GPRS context. When module starts it is prohibited to open the context. When modem's GPRS context is closing (for example changing network) it is allowed to open it only at a defined time. It is possible to allow connections every 10 minutes up to once per day.

Example value: 7F,FF,FF,FF,FF,FF,FF,FF,FF,FF,FF,FF,FF,FF,FF,FF,FF,FF,FF

Schedule parameter format:

Time is defined as 19 byte array. First byte of array defines week days; the rest 18 bytes define timestamps with 10 minute interval. In first byte, first bit (LSB) defines if module should connect to GPRS (send SMS) on Monday, second bit – on Tuesday and so on up to seventh bit – which means Sunday. Eighth bit (MSB) is not used. If bits value is 0 then device is not allowed to open GPRS context, but if it is already open – does not close it. If value is 1 it will work as day minutes are defined in rest of the bytes. Day's minutes are defined by 18 bytes (144 bits). Every n^{th} bit (beginning from the first bit (LSB) and ending 18 bytes 8th bit (MSB)) indicates every 10th minute of the day (day has 1440 minutes).

Sample: GPRS will be allowed on Monday to Friday at 8:00 and 16:00 GMT. The following value should be configured:

00011111 00000000 00000000 00000000 000000000 00000000 00000000 00000001 00000000 00000000 00000000 00000000 00000000 00000001 00000000 00000000 00000000 00000000 00000000

Red bits indicate that GPRS will be allowed every day except Saturdays and Sundays. Blue bits indicate 480 and 720 minutes (480min = 8h and 720min = 16h). So the parameter value should be: 1F,00,00,00,00,00,00,01,00,00,00,00,00,01,00,00,00,00,00

It should be sent as UTF8 encoded string.

9.5.2 Home Network GSM operator code "Vehicle MOVING" parameters

9.5.2.1 Min Period (ID=1550)

This parameter indicates time interval in seconds in order to acquire new record. If value is 0 it means no records by min period will be saved.

Minimum value	Maximum value	Recommended value	Goes with (depends on) parameters	Value type
0	2592000	-	**Min Distance (ID=1551)** **Min Angle (ID=1552)** **GPRS Week Time (ID=1555)**	U32

9.5.2.2 Min Distance (ID=1551)

This parameter indicates distance in meters in order to acquire new record. Record is stored when the distance between previous records is greater than parameters value. If value is 0 it means no records by min distance will be saved.

Minimum value	Maximum value	Recommended value	Goes with (depends on) parameters	Value type
0	65535	-	**Min Period (ID=1550)** **Min Angle (ID=1552)** **GPRS Week Time (ID=1555)**	U32

9.5.2.3 Min Angle (ID=1552)

This parameter indicates angle in degrees in order to acquire new record. If angle difference between last recorded coordinate and current position is greater than defined value, new record is stored. This parameter is operational, when speed is higher than 10km/h. If value is 0 it means no records by min angle will be saved.

Minimum value	Maximum value	Recommended value	Goes with (depends on) parameters	Value type
0	180	-	**Min Period (ID=1550)** **Min Distance (ID=1551)** **GPRS Week Time (ID=1555)**	U16

9.5.2.4 Min Saved Records (ID=1553)

This parameter defines minimum number of records in one data packet that can be sent to server. It has higher priority than Data Send Period (ID=1554).

Minimum value	Maximum value	Recommended value	Goes with (depends on) parameters	Value type
1	255	1	**Min Period (ID=1550)** **Min Distance (ID=1551)** **Min Angle (ID=1552)** **GPRS Week Time (ID=1555)**	U8

9.5.2.5 Send Period (ID=1554)

This parameter indicates frequency (time interval in seconds) of sending data to server.

Minimum value	Maximum value	Recommended value	Goes with (depends on) parameters	Value type
0	2592000	-		U32

			GPRS Week Time (ID=1545)	

9.5.2.6 GPRS Week Time (ID=1555)

Read *GPRS Week Time (ID=1545)*

9.5.3 Roaming Network GSM operator code "Vehicle on STOP" parameters

9.5.3.1 Min Period (ID=1560)

This parameter indicates time interval in seconds in order to acquire new record. If value is 0 it means no records by min period will be saved.

Minimum value	Maximum value	Recommended value	Goes with (depends on) parameters	Value type
0	2592000	-		U32

9.5.3.2 Min Saved Records (ID=1563)

This parameter defines minimum number of records in one data packet that can be sent to server. It has higher priority than Data Send Period (ID=1564).

Minimum value	Maximum value	Recommended value	Goes with (depends on) parameters	Value type
1	255	1	**GPRS Week Time (ID=1565)**	U8

9.5.3.3 Send Period (ID=1564)

This parameter indicates frequency (time interval in seconds) of sending data to server.

Minimum value	Maximum value	Recommended value	Goes with (depends on) parameters	Value type
0	2592000	-	**Min Saved Records (ID=1563)** **GPRS Week Time (ID=1565)**	U32

9.5.3.4 GPRS Week Time (ID=1565)

Read *GPRS Week Time (ID=1545)*

9.5.4 Roaming Network GSM operator code "Vehicle MOVING" parameters

9.5.4.1 Min Period (ID=1570)

This parameter indicates time interval in seconds in order to acquire new record. If value is 0 it means no records by min period will be saved.

Minimum value	Maximum value	Recommended value	Goes with (depends on) parameters	Value type
0	2592000	-	**Min Distance (ID=1571)** **Min Angle (ID=1572)** **GPRS Week Time (ID=1575)**	U32

9.5.4.2 Min Distance (ID=1571)

This parameter indicates distance in meters in order to acquire new record. Record is stored when the distance between previous records is greater than parameter's value. If value is 0 it means no records by min distance will be saved.

Minimum value	Maximum value	Recommended value	Goes with (depends on) parameters	Value type
0	65535	-	**Min Period (ID=1570)** **Min Angle (ID=1572)** **GPRS Week Time (ID=1575)**	U32

9.5.4.3 Min Angle (ID=1572)

This parameter indicates angle in degrees in order to acquire new record. If angle difference between last recorded coordinate and current position is greater than defined value, new record is stored. This parameter is operational, when speed is higher than 10km/h. If value is 0 it means no records by min angle will be saved.

Minimum value	Maximum value	Recommended value	Goes with (depends on) parameters	Value type
0	180	-	**Min Period (ID=1570)** **Min Angle (ID=1572)** **GPRS Week Time (ID=1575)**	U16

9.5.4.4 Min Saved Records (ID=1573)

This parameter defines minimum number of records in one data packet that can be sent to server. It has higher priority than Data Send Period (ID=1574).

Minimum value	Maximum value	Recommended value	Goes with (depends on) parameters	Value type
1	255	1	**Min Period (ID=1570)** **Min Distance (ID=1571)** **Min Angle (ID=1572)** **GPRS Week Time (ID=1575)**	U8

9.5.4.5 Send Period (ID=1574)

This parameter indicates frequency (time interval in seconds) of sending data to server.

Minimum value	Maximum value	Recommended value	Goes with (depends on) parameters	Value type
0	2592000	-	**Min Saved Records (ID=1573)** **GPRS Week Time (ID=1575)**	U32

9.5.4.6 GPRS Week Time (ID=1575)

Read GPRS Week Time (ID=1545)

9.5.5 Unknown Network GSM operator code "Vehicle on STOP" parameters

9.5.5.1 Min Period (ID=1580)

This parameter indicates time interval in seconds in order to acquire new record. If value is 0 it means no records by min period will be saved.

Minimum value	Maximum value	Recommended value	Goes with (depends on) parameters	Value type
0	2592000	-		U32

9.5.5.2 Min Saved Records (ID=1583)

This parameter defines minimum number of records in one data packet that can be sent to server. It has higher priority than Data Send Period (ID=1584).

Minimum value	Maximum value	Recommended value	Goes with (depends on) parameters	Value type
1	255	1	**GPRS Week Time (ID=1585)**	U8

9.5.5.3 Send Period (ID=1584)

This parameter indicates frequency (time interval in seconds) of sending data to server.

Minimum value	Maximum value	Recommended value	Goes with (depends on) parameters	Value type
0	2592000	-	**Min Saved Records (ID=1583)** **GPRS Week Time (ID=1585)**	U32

9.5.5.4 GPRS Week Time (ID=1585)

Read *GPRS Week Time (ID=1545)*

9.5.6 Unknown Network GSM operator code "Vehicle MOVING" parameters

9.5.6.1 Min Period (ID=1590)

This parameter indicates time interval in seconds in order to acquire new record. If value is 0 it means no records by min period will be saved.

Minimum value	Maximum value	Recommended value	Goes with (depends on) parameters	Value type
0	2592000	-	**Min Distance (ID=1571)** **Min Angle (ID=1572)** **GPRS Week Time (ID=1575)**	U32

9.5.6.2 Min Distance (ID=1591)

This parameter indicates distance in meters in order to acquire new record. Record is stored when the distance between previous records is greater than parameter's value. If value is 0 it means no records by min distance will be saved.

Minimum value	Maximum value	Recommended value	Goes with (depends on) parameters	Value type

0	65535	-	**Min Period (ID=1570)** **Min Angle (ID=1572)** **GPRS Week Time (ID=1575)**	U32

9.5.6.3 Min Angle (ID=1592)

This parameter indicates angle in degrees in order to acquire new record. If angle difference between last recorded coordinate and current position is greater than defined value, new record is stored. This parameter is operational, when speed is higher than 10km/h. If value is 0 it means no records by min angle will be saved.

Minimum value	Maximum value	Recommended value	Goes with (depends on) parameters	Value type
0	180	-	**Min Period (ID=1570)** **Min Angle (ID=1572)** **GPRS Week Time (ID=1575)**	U16

9.5.6.4 Min Saved Records (ID=1593)

This parameter defines minimum number of records in one data packet that can be sent to server. It has higher priority than Data Send Period (ID=1594).

Minimum value	Maximum value	Recommended value	Goes with (depends on) parameters	Value type
1	255	1	**Min Period (ID=1590)** **Min Distance (ID=1591)** **Min Angle (ID=1592)** **GPRS Week Time (ID=1595)**	U8

9.5.6.5 Send Period (ID=1594)

This parameter indicates frequency (time interval in seconds) of sending data to server. In order to send data to server GPRS parameters must be enabled

Minimum value	Maximum value	Recommended value	Goes with (depends on) parameters	Value type
0	2592000	-	**Min Saved Records (ID=1593)** **GPRS Week Time (ID=1595)**	U32

9.5.6.6 GPRS Week Time (ID=1595)

Read GPRS Week Time (ID=1545)

9.6 Features Parameters

9.6.1 Scenarios Enable (ID=1600)

Device can operate in its scenario according to selected value: No Scenario selected (value 0); Green Driving selected (value 1), Overspeeding selected (value 2), Green Driving & Overspeeding selected (value 3).

Minimum value	Maximum value	Recommended value	Goes with (depends on) parameters	Value type
0	3	-		U8

9.6.2 Max Acceleration Force (ID=1602)

It is max allowed acceleration force which can be reached while accelerating without triggering harsh acceleration event.

Minimum value	Maximum value	Recommended value	Goes with (depends on) parameters	Value type
0.25	0.85	0.25	**Scenarios Enable (ID=1600)**	Float

9.6.3 Max Braking Force (ID=1603)

It is max allowed braking force which can be reached while braking without triggering harsh braking event.

Minimum value	Maximum value	Recommended value	Goes with (depends on) parameters	Value type
0.25	0.85	0.35	**Scenarios Enable (ID=1600)**	Float

9.6.4 Max Angular Velocity (ID=1604)

It is max allowed cornering angle which can be reached while cornering without triggering harsh cornering event.

Minimum value	Maximum value	Recommended value	Goes with (depends on) parameters	Value type
0.1	1.0	-	**Scenarios Enable (ID=1600)**	U16

9.6.5 Max allowed Speed (ID=1605)

It is max allowed speed which can be reached. If this value exceeded Over speeding event will occur.

Minimum value	Maximum value	Recommended value	Goes with (depends on) parameters	Value type
0	260	-	**Scenarios Enable (ID=1600)**	U16

9.6.6 Excessive Idling detection (ID=1607)

If ignition is ON and no movement, event will be generated when TMO reached. This functionality is 1 – enabled, 0 – disabled (default).

Minimum value	Maximum value	Recommended value	Goes with (depends on) parameters	Value type
0	255	-	**Time to stationary (ID=1608)**	U8

			Time to movement (ID=1609)	

9.6.7 Time to stationary (ID=1608)

If ignition is ON and no movement, event will be generated when TMO reached. This functionality is 1-enabled, 0-disabled (default).

Minimum value	Maximum value	Recommended value	Goes with (depends on) parameters	Value type
0	255	-	**Scenario Enable (ID=1607)** **Time to movement (ID=1609)**	U8

9.6.8 Time to movement (ID=1609)

If ignition is ON and no movement, event will be generated when TMO reached. This functionality is 1 – enabled, 0 – disabled (default).

Minimum value	Maximum value	Recommended value	Goes with (depends on) parameters	Value type
0	255	-	**Time to stationary (ID=1608)** **Scenario Enable (ID=1607)**	U8

9.6.9 Jamming Detection (ID=1606)

Jamming detection sensitivity can be set to: 0 – disabled, 1 – low sensitivity, 2 – normal sensitivity (default), 3 – high sensitivity.

Minimum value	Maximum value	Recommended value	Goes with (depends on) parameters	Value type
0	3	-		U8

9.6.10 Alarm (ID=1610)

Alarm can be set to generate low or high priority event: 0 – disabled (default), 1 – low priority event, 2 – high priority event.

Minimum value	Maximum value	Recommended value	Goes with (depends on) parameters	Value type
0	2	-		U8

9.6.11 Unplug Detection (ID=1611)

Unplug detection can be set to: 0 – disabled (default), 1 – simple, 2 – advanced.

Minimum value	Maximum value	Recommended value	Goes with (depends on) parameters	Value type
0	2	-		U8

9.6.12 Crash Detection (ID=1612)

Crash detection can be set to generate low or high priority event on crash: 0 – disabled (default), 1 – low priority event, 2 – high priority event.

Minimum value	Maximum value	Recommended value	Goes with (depends on) parameters	Value type
0	2	-		U8

9.6.13 Trip (ID=1280)

This parameter enables ability to detect START and STOP of the trip. Possible values are: 0 – disabled (default), 1 – standard, 2 – private/business.

Minimum value	Maximum value	Recommended value	Goes with (depends on) parameters	Value type
0	2	-		U8

9.6.14 Start Speed (ID=1281)

This parameter represents speed, which is detected as minimum speed to indicate TRIP START and generate event.

Minimum value	Maximum value	Recommended value	Goes with (depends on) parameters	Value type
0	255	-		U8

9.6.15 Ignition Off Timeout (ID=1282)

This parameter represents timeout to wait if ignition is off in order to detect TRIP STOP and generate event.

Minimum value	Maximum value	Recommended value	Goes with (depends on) parameters	Value type
0	65535	-	Ignition Source (ID=1003) Mode Switch Source (ID=1002) Trip (ID=1280)	U16

9.6.16 Distance Mode (ID=1283)

This parameter defines how and from what data source driven distance is counted. Possible values are: 0 – between records (from GPS), 1 – continuous (from GPS) (default), 2 – continuous (from OBD).

Minimum value	Maximum value	Recommended value	Goes with (depends on) parameters	Value type
0	2	-		U8

9.6.17 Trip Continuous distance counting

This parameter removed from FM1000 firmware version >00.06.xx. Odometer is always counting distance continuously (from Trip start to Trip stop) when Distance Mode parameter is set to continuous.

9.6.18 Odometer Value (ID=1284)

Minimum value	Maximum value	Recommended value	Goes with (depends on) parameters	Value type
0	999999	-	Trip (ID=1280)	U16

Geofencing

In this chapter it is explained how to get all parameters for the first Geofence zone (all ID numbers are for the 1st zone). And at the end of the chapter (part 8.6.10) is presented a table with the IDs of all the rest Geofence zones.

9.6.19 Frame Border (ID=1020)

Geofence border thickness, measured in meters.

Minimum value	Maximum value	Recommended value	Goes with (depends on) parameters	Value type
0	1000000	1000	**All Geofencing parameters**	U32

9.6.20 Geofence Zone #1 Shape (ID=1030)

Geofence shape parameter can be: circle – value 0; rectangle – value 1.

Minimum value	Maximum value	Recommended value	Goes with (depends on) parameters	Value type
0	1	-	**All Geofencing parameters**	U8

9.6.21 Geofence Zone #1 Priority (ID=1031)

Parameter defines Geofence priority: 0 is low, 1 – high, 2 – panic.

Minimum value	Maximum value	Recommended value	Goes with (depends on) parameters	Value type
0	2	-	**All Geofencing parameters**	U8

9.6.22 Geofence Zone #1 Generate Event (ID=1032)

Generate event on:
a) No event – value 0;
b) On entering zone – value 1;
c) On exiting zone – value 2;
d) On both – value 3.

Minimum value	Maximum value	Recommended value	Goes with (depends on) parameters	Value type
0	3	-	**All Geofencing parameters**	U8

9.6.23 Geofence Zone #1 Longitude (X1) (ID=1033)

Parameter has two meanings dependent on zone shape. If shape is a rectangle, then ID=10333 is left down corner X coordinate. If shape is a circle, then ID=1033 is center of that circle X coordinate.

Sample value: 25.30528.

Minimum value	Maximum value	Recommended value	Goes with (depends on) parameters	Value type
-180	180	-	**All Geofencing parameters**	Float

9.6.24 Geofence Zone #1 Latitude (Y1) (ID=1034)

Parameter has two meanings dependent on zone shape. If shape is a rectangle, then ID=1034 is left down corner Y coordinate. If shape is a circle, then ID=1034 is center of that circle Y coordinate.

Minimum value	Maximum value	Recommended value	Goes with (depends on) parameters	Value type
-90	90	-	**All Geofencing parameters**	Float

9.6.25 Geofence Zone #1 Longitude (X2) (ID=1035)

Parameter has two meanings depending on zone shape. If shape is a rectangle, then ID=1035 is right upper corner X coordinate. If shape is a circle, then ID=1035 is radius of circle with center of ID=1033 and ID=1034.

For rectangle:

Minimum value	Maximum value	Recommended value	Goes with (depends on) parameters	Value type
-180	180	-	**All Geofencing parameters**	Float

For circle:

Minimum value	Maximum value	Recommend ed value	Goes with (depends on) parameters	Value type
0	1000000	1000	**All Geofencing parameters**	Float

9.6.26 Geofence Zone #1 Latitude (Y2) (ID=1036)

If shape is rectangular, then ID=1036 is right upper corner Y coordinate. If shape circle, ID=1036 is not used.

Minimum value	Maximum value	Recommended value	Goes with (depends on) parameters	Value type
-90	90	-	**All Geofencing parameters**	Float

Other 4 GeoFence zone's parameters have the same logic as shown in GeoFence Zone #1.

GeoFence Zone Number	Geofence Zone's parameters
1	1030-1036
2	1040-1046
3	1050-1056
4	1060-1066
5	1070-1076

AutoGeofencing

9.6.27 Enable/Disable (ID=1101)

Enable – value 1; disable – value 0.

Minimum value	Maximum value	Recommended value	Goes with (depends on) parameters	Value type
0	1	1		U8

9.6.28 Activation Timeout (ID=1102)

Parameter represents AutoGeofencing activation timeout in seconds.

Minimum value	Maximum value	Recommended value	Goes with (depends on) parameters	Value type
0	65535	60	**Enable/Disable (ID=1101)**	U16

9.6.29 AutoGeofence event Priority (ID=1103)

Parameter defines AutoGeofence event priority: 0 is low, 1 – high.

Minimum value	Maximum value	Recommended value	Goes with (depends on) parameters	Value type
0	1	1	**Enable/Disable (ID=1101)** **AutoGeofence event generating (ID=1104)**	U8

9.6.30 AutoGeofence event generating (ID=1104)

Generate event: 0 – no event; 1 – on entering zone; 2 – on exiting zone; 3 – on both.

Minimum value	Maximum value	Recommended value	Goes with (depends on) parameters	Value type
0	3	2	**Enable/Disable (ID=1101)** **AutoGeofence event Priority (ID=1103)**	U8

9.6.31 Radius (ID=1105)

Parameter represents radius of circle with center device coordinates after activating AutoGeofence feature.

Minimum value	Maximum value	Recommended value	Goes with (depends on) parameters	Value type
0	1000000	100	**Enable/Disable (ID=1101)**	U32

9.7 Accelerometer parameters

9.7.1 Acceleration range configuration (ID=1290)

Parameter represents range of movement detection in G force.

Minimum value	Maximum value	Recommended value	Goes with (depends on) parameters	Value type
2	16	2	**Ignition Source (ID=1003)**	U32

9.7.2 Movement filter start (ID=1293)

Parameter represents how long it takes to generate movement event in seconds.

Minimum value	Maximum value	Recommended value	Goes with (depends on) parameters	Value type
1	60	0	**Ignition Source (ID=1003)**	U32

9.7.3 Movement filer stop (ID=1294)

Parameter represents how long it takes to change movement I/O element state from 1 to 0 in seconds.

Minimum value	Maximum value	Recommended value	Goes with (depends on) parameters	Value type
1	300	60	**Ignition Source (ID=1003)**	U32

9.8 I/O parameters

I/O properties are additional data sources which are recorded along with usual GNSS data.

9.8.1 I/O#1 property parameter (ID=1300)

Parameter defines I/O property value. Possible values: enabled (1), disabled (0).

Minimum value	Maximum value	Recommended value	Goes with (depends on) parameters	Value type
0	1	-	**I/O#1 priority (ID=1301)** **I/O#1 High level (ID=1302)** **I/O#1 Low level (ID=1303)** **I/O#1 logic operand (ID=1304)** **I/O#1 averaging length (ID=1305)**	S8

9.8.2 I/O#1 priority (ID=1301)

Parameter defines I/O property type of priority: 0 is low, 1 – high, 2 – panic.

Minimum value	Maximum value	Recommended value	Goes with (depends on) parameters	Value type
0	2	0	**I/O#1 property parameter (ID=1300)** **I/O#1 High level (ID=1302)** **I/O#1 Low level (ID=1303)** **I/O#1 logic operand (ID=1304)** **I/O#1 averaging length (ID=1305)**	S8

9.8.3 I/O#1 High level (ID=1302)

Parameter defines high value of triggered I/O property. This parameter is used to set thresholds for I/O properties to generate events.

Minimum value	Maximum value	Recommended value	Goes with (depends on) parameters	Value type
-2147483648	2147483647	1	**I/O#1 property parameter (ID=1300)** **I/O#1 priority (ID=1301)** **I/O#1 Low level (ID=1303)** **I/O#1 logic operand (ID=1304)**	S32

			I/O#1 averaging length (ID=1305)	

9.8.4 I/O#1 Low level (ID=1303)

Parameter defines low value of triggered I/O property. This parameter is used to set thresholds for I/O properties to generate events.

Minimum value	Maximum value	Recommended value	Goes with (depends on) parameters	Value type
-2147483648	2147483647	0	**I/O#1 property parameter (ID=1300)** **I/O#1 priority (ID=1301)** **I/O#1 High level (ID=1302)** **I/O#1 logic operand (ID=1304)** **I/O#1 averaging length (ID=1305)**	S32

9.8.5 I/O#1 logic operand (ID=1304)

Parameter defines when event is sent: 0 – on range exit; 1 – on range entrance; 2 – both; 3 – monitoring; 4 – hysteresis.

Minimal value	Maximum value	Recommended value	Goes with (depends on) parameters	Value type
0	4	3	**I/O#1 property parameter (ID=1300)** **I/O#1 priority (ID=1301)** **I/O#1 High level (ID=1302)** **I/O#1 Low level (ID=1303)** **I/O#1 averaging length (ID=1305)**	S8

9.8.6 I/O#1 averaging length (ID=1305)

Parameter defines I/O property sample length to average. If no averaging needed default value is 1.

Minimum value	Maximum value	Recommended value	Goes with (depends on) parameters	Value type
0	2592000	1	**I/O#1 property parameter (ID=1300)** **I/O#1 priority (ID=1301)** **I/O#1 High level (ID=1302)** **I/O#1 Low level (ID=1303)** **I/O#1 logic operand (ID=1304)**	S32

Other I/O property elements can be configured in same logic. All I/O element parameters are listed in the next table.

I/O Element Number	I/O element parameters
I/O#0 – Ignition	1300 – 1305
I/O#1 – GPS PDOP	1310 – 1315
I/O#2 – GPS HDOP	1320 – 1325
I/O#3 – External Voltage	1330 – 1335
I/O#4 – Movement	1340 – 1345
I/O#5 – Trip Distance	1350 – 1355
I/O#6 – Active GSM Operator	1360 – 1365
I/O#7 – GPS Speed	1370 – 1375
I/O#8 – Data Mode	1380 – 1385
I/O#9 – GSM Signal	1390 – 1395
I/O#10 – Deep Sleep	1400 – 1405
I/O#11 – GSM Cell ID	1410 – 1415
I/O#12 – GSM Area Code	1420 – 1425
I/O#13 – Battery Voltage	1430 – 1435
I/O#14 – Battery Current	1440 – 1445
I/O#15 – Total distance	1450 – 1455

9.9 OBD parameters

9.9.1 OBD Interface (ID=2100)

Enable – value 1; disable – value 0.

Minimum value	Maximum value	Recommended value	Goes with (depends on) parameters	Value type
0	1	-		U8

9.9.2 OBD I/O Configuration

OBD I/O configuration is the same as general I/O (See I/O parameters). There are 20 slots, which can be dedicated for certain OBD parameters, recognized by PID. Only 20 slots are available because not many vehicles support more than 20 OBD parameters.

Slot number	I/O element parameters
1	2150 – 2155
2	2160 – 2165
3	2170 – 2175
4	2180 – 2185
5	2190 – 2195
6	2200 – 2205
7	2210 – 2215
8	2220 – 2225
9	2230 – 2235
10	2240 – 2245
11	2250 – 2255
12	2260 – 2265
13	2270 – 2275
14	2280 – 2285
15	2290 – 2295
16	2300 – 2305
17	2310 – 2315
18	2320 – 2325
19	2330 – 2335
20	2340 – 2345

For example, SMS command “setparam 2250 12” will configure Engine RPM PID for 11 th slot. Then other parameters can be configured similar to I/O parameters: 2251 – Priority; 2252 – High level; 2253 – Low level; 2254 – Event type.

1.7 ***SMS event configuration***

9.9.3 I/O#1 element SMS event configuration (ID=100)

Command sets SMS warning on I/O#1 element.

SMS Format: setparam X,Y,W,Z;
X – ID;
Y – Enable/Disable (0/1);
W – Telephone number INDEX (See **9.4.15 SMS Event Predefined Numbers paragraph**, ID 150 – INDEX 1; ID151 – INDEX 2, …);
Z – SMS Text.

Example: "setparam 100 1,5,Digital Input 1 Event!"

Other I/O element SMS events can be configured in same logic. All I/O element SMS event IDs are listed in the next table. OBD Iox (x – any number between 1 to 20) defines SMS event text for configured OBD IO slot.

Element name (default SMS Event Text)	ID
Digital Input 1	100
PDOP	101
HDOP	102
Power voltage	103
Movement	104
Trip Distance	105
Actual operator Code	106
GPS speed	107
Operating Mode	108
GSM Signal	109
Deep Sleep	110
Cell ID	111
Area Code	112
Battery Voltage	113
Battery Current	114
Total Distance	115

OBD IO1	120
OBD IO2	121
OBD IO3	122
OBD IO4	123
OBD IO5	124
OBD IO6	125
OBD IO7	126
OBD IO8	127
OBD IO9	128
OBD IO10	129
OBD IO11	130
OBD IO12	131
OBD IO13	132
OBD IO14	133
OBD IO15	134
OBD IO16	135
OBD IO17	136
OBD IO18	137
OBD IO19	138
OBD IO20	139
Geo Zone 1	140
Geo Zone 2	141
Geo Zone 3	142
Geo Zone 4	143
Geo Zone 5	144
Auto Geofence	145
Trip	146
OverSpeeding	147
Exc. Idling	148
Green Driving	149
Unplug Detection	160
Crash Detection	161
Alarm	162

10 Module installation

Installing FM1000 module:

1) Locate OBD-II connector in your car (see car owner's manual for the location of the connector);
2) Plug in FM1000 device in OBD-II connector or use optional extension cable (Figure 37);
3) If status and navigate led lights turn on, device is ready to use.

Figure 37 OBD-II extension cable

Installation recommendations:

1) SIM card should be inserted in the module while the connector is plugged off (while module has no power);
2) Please, make sure that the module is firmly embedded in the OBD-II connector or optional extension cable (if there is not enough space for the device near the OBD-II connector, an extension cable may be necessary, which can be ordered as an accessory – not included in the package).

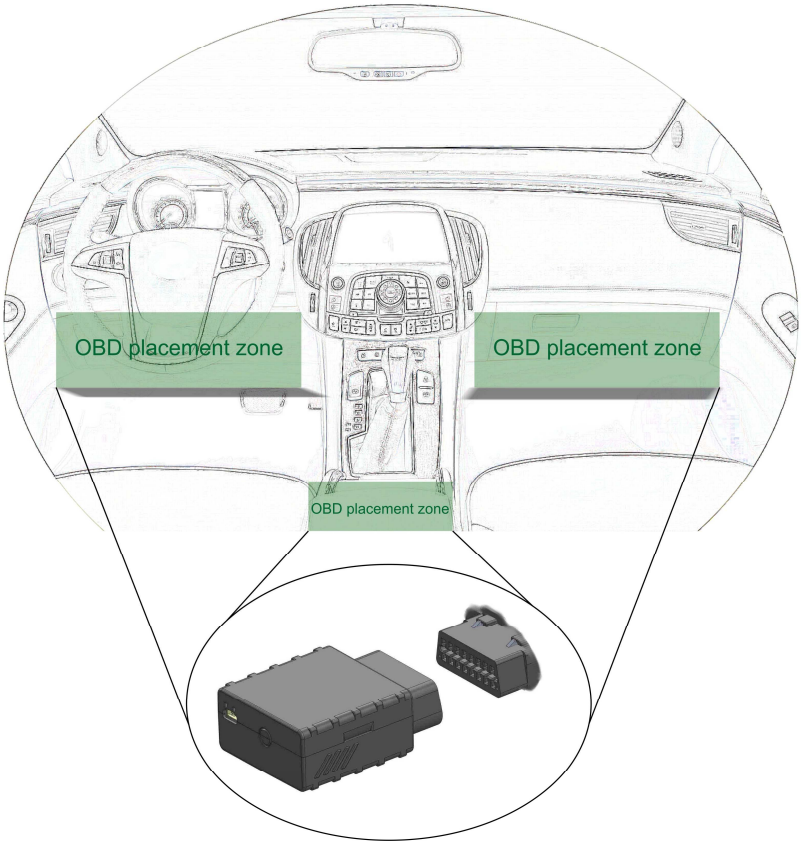

Figure 38 Correct placement of FM1000

Note: I/O element's "Movement" Averaging constant is interpreted as Start Move Timeout in seconds (from 1 to 59).
Start Move Timeout – is a time interval required for accelerometer to be in the moving state, to consider vehicle as moving.

Warning! Do not use FM1000 device if it distracts driver or causes inconvenience due to OBD II placement. Device must not interfere with driver!

11 CHANGE LOG

Nr.	Date	Version	Comments
1	2015.04.29	1.5	Version with ST. Changed IO IDs, added GPRS commands.
2	2015.05.12	1.6	Removed Continuous Odometer. Fixed OBD AVL ID and configuration. Added new configurator pictures, corrected OBD protocol information, added new System parameters descriptions. Updated electrical characteristics.
3	2015.05.19	1.7	Deleted unnecessary information. Rearranged Table 3. Corrected formatting where needed. Removed DOUT description.
4	2015.05.20	1.7.1	Minor changes, updated parameter list, added excessive idling and jamming scenario descriptions .
5	2015.08.13	1.7.2	Operator list description added, fixed wrong table format.
6	2015.08.27	1.7.3	Added alarm, unplug detection, crash detection, private/business trip, distance mode, odometer source.
7	2015.08.27	1.7.4	Odometer functionality description correction.
8	2015.10.08	1.7.5	Updated Location by call functionality description; Updated Fuel consumption calculation description; Added static navigation description; Added OBD diagnostic SMS commands descriptions.
9	2015.12.16	1.8	Firmware update using USB description updated, and some other minor changes.
10	2016-02-01	1.9	Removed Fuel consumption calculation description. Corrected Operator list description. Corrected Data Acquisition Modes description.