CATTRON™

EliteIQ™

User Manual

9M02-7100-A001-EN

CONNECT. CONTROL. PROTECT.

Revision History

VERSION	DATE	NOTES
1.1	04/2020	Initial Version
B	12/2020	Document rebranded and contact information updated

Any information furnished by Cattron™ and its agents is believed to be accurate and reliable. All specifications are subject to change without notice. Responsibility for the use and application of Cattron products rests with the end user since Cattron and its agents cannot be aware of all potential uses. Cattron makes no warranties as to non-infringement nor as to the fitness, merchantability, or sustainability of any Cattron products for any specific or general uses. Cattron Holdings, Inc., or any of its affiliates or agents shall not be liable for incidental or consequential damages of any kind. All Cattron products are sold pursuant to the Terms and Conditions of Sale, a copy of which will be furnished upon request. When used as a tradename herein, Cattron means Cattron Holdings, Inc. or one or more subsidiaries of Cattron Holdings, Inc. Cattron™, corresponding logos, and other marks are trademarks or registered trademarks of Cattron Holdings, Inc. Other marks may be the property of third parties. Nothing herein provides a license under any Cattron or any third party intellectual property right.

Contents

1 Description 5
1.1 Overview 5
1.1.1 Alarm Capabilities 5
1.1.2 Control Capabilities 5
1.1.3 Expandable 6
1.1.4 Communications Capabilities 6
2 Installation and Setup 7
2.1 Overview 7
2.2 What is the Installation Process? 7
2.2.1 Unpacking the Equipment 7
2.2.2 Mounting the Equipment 7
2.2.3 Connecting the Main Power 9
2.2.4 Connecting the Input and Output Cards 11
2.2.5 Testing the System 18
3 Quick Start 22
3.1 Default Values 22
3.2 Quick Programming Steps 23
3.2.1 Step 1 – Setup Digital Inputs (Skip if Not Using Digital Inputs) 23
3.2.2 Step 2 – Setup Analog Inputs (Skip if Not Using Analog Inputs) 23
3.2.3 Step 3 – Save Programming 23
3.3 Testing the System 24
4 Operation 25
4.1 Overview 25
4.1.1 How to Use the Keypad 26
4.1.2 Local Key Summary 26
4.1.3 How to Enter Text for Names 27
4.1.4 RUN Mode Operations 28
4.2 Viewing the Display 30
4.2.1 Automatic Alarm Screen 30
4.2.2 How Alarms are Presented via LEDs 31
4.2.3 System Channels 31
4.2.4 Physical Channel Numbering 32

4.2.5 Modbus Channel Numbering 33
4.2.6 RUN Mode Screens 33
4.2.7 Acknowledging Alarms 35
5 PROGramming Mode from the Keypad 37
5.1 Overview 37
5.1.1 Display – Selecting a Menu Item 37
5.1.2 Display – Changing a Setting 37
5.2 System Wide Settings 38
5.3 Program Channel Settings 39
5.3.1 Analog Inputs 39
5.3.2 Relay Outputs 41
5.3.3 Digital Inputs 42
5.4 Relay List Setup 43
5.4.1 Relay Operations 43
6 Modbus RTU Master 44
6.1 Overview 44
6.2 Initializing the Modbus Master Interface 44
6.2.1 Modbus Master Channel Setup 45
6.2.2 Modbus Master Port Setup 45
6.3 Mapping EliteIQ Channels to Modbus Registers 46
7 PC/Laptop Access 47
8 Glossary 51
9 Technical Support 71

1 Description

1.1 Overview

EliteIQ is a state-of-the-art Remote Telemetry Unit (RTU), Controller and Alarm Notification and Reporting system that provides the following:

- Continuous monitoring of up to 48 dry contact inputs, relay outputs or analog inputs in any combination, or up to 72 Modbus RTU registers
- Historical viewing and reporting of data on the web via a cloud-based application
- Complete programming locally through the keypad or a directly connected PC
- Event and data logging
- Event-based control of local or remote relays based on changing digital and analog values
- Field-installable I/O options

1.1.1 Alarm Capabilities

By programming specific settings in the EliteIQ, you define what conditions constitute an alarm and what action to perform when an alarm condition occurs. Actions supported by the EliteIQ include the following:

- Setting relays for local control or alarm annunciation
- Sending data to the web-based RemoteIQ system to deliver text, voice or email notifications
- Setting local LEDs to alert personnel that channels are in alarm

So, the EliteIQ is your complete 24-hour a day, 7-day a week monitoring and notification system that allows you to turn your operations into unattended operations.

1.1.2 Control Capabilities

The EliteIQ is a complete stand-alone controller capable of turning relays on and off based on a number of conditions. These conditions can be grouped together so that when any of them are met, the appropriate relay is activated or deactivated.

Conditions on which relays can be activated or deactivated are as follows:

- A digital input changing state
- A totalizer or time duration counter reaching a specified limit
- An analog input transitioning from the Normal state to the High Alarm state
- An analog input transitioning from the High Alarm state to the Normal state
- An analog input transitioning from the Normal state to the Low Alarm state
- An analog input transitioning from the Low Alarm state to the Normal state
- An analog input exceeding a Positive or Negative Rate of Change limit
- A command from a SCADA system via the Modbus RTU interface

1.1.3 Expandable

The EliteIQ is expandable as follows:

- Simple and affordable plug-in cards for sensors, relays or digital inputs
- Supports 8-48 physical input channels
- Relay expansion using 4-channel cards

1.1.4 Communications Capabilities

The EliteIQ's communication capabilities include the following:

- Web-based monitoring service to deliver alarm notification, historical charting of data and reporting
- Modbus Master to distributed sensors

2 Installation and Setup

2.1 Overview

This section of the manual provides information on installing the EliteIQ and confirming its initial operation. Performing a proper installation ensures the correct operation of the EliteIQ for maximum life.

Please read this entire section before starting the installation process.

2.2 What is the Installation Process?

Installation consists of the following steps:

1. Unpacking the Equipment
2. Mounting the Equipment
3. Connecting the Main Power
4. Connecting the Input and Output Cards
5. Testing the System

Each step is described in detail in the remainder of this section.

2.2.1 Unpacking the Equipment

The EliteIQ is shipped with the following:

- The EliteIQ in either a NEMA 4X plastic enclosure or metal enclosure
- A set of I/O cards installed
- An installed backup battery
- User Manual and Quick Reference Guide

2.2.1.1 Operating Environment

The EliteIQ should be installed in an environment that is not subject to shock or vibration. The operating temperature of the EliteIQ is -40 to 185 ºF (-40 to 85 ºC).

2.2.2 Mounting the Equipment

⚠	**WARNING**
	A LOCK MUST BE INSTALLED SECURING THE COVER TO PREVENT NON-SERVICE TRAINED PERSONNEL FROM GAINING ACCESS TO THE INTERNAL ELECTRICAL CIRCUITRY OF THE ELITEIQ.

The EliteIQ is available in a NEMA 4X enclosure or a panel/flush mount enclosure.

Fiberglass NEMA Enclosure

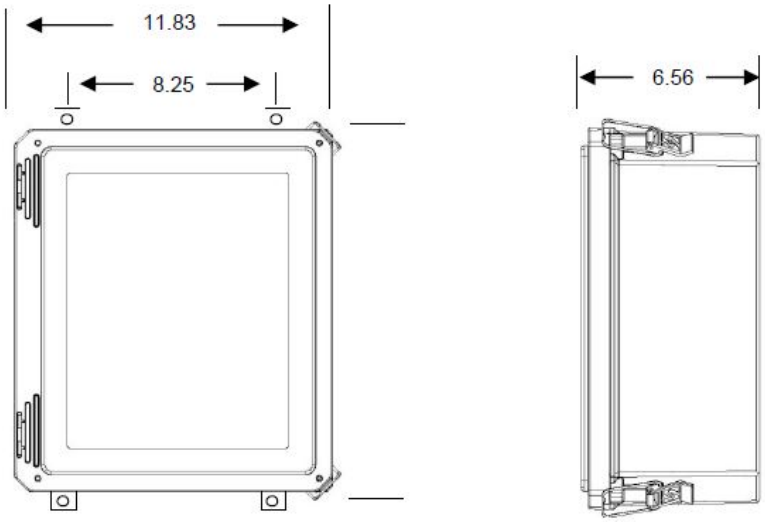

Figure 1: NEMA 4X Enclosure

Panel Mount Enclosure

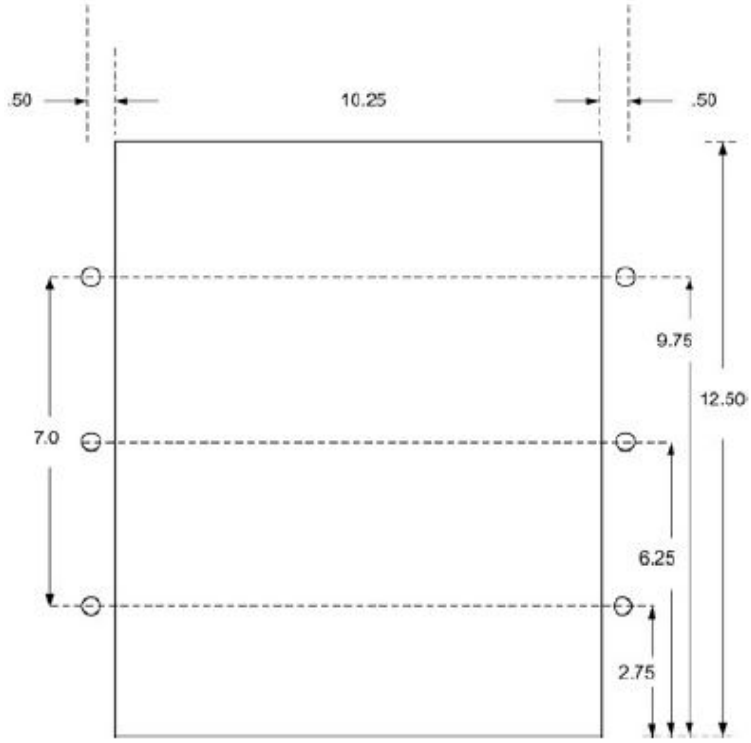

Figure 2: Panel Enclosure Mounting Dimensions

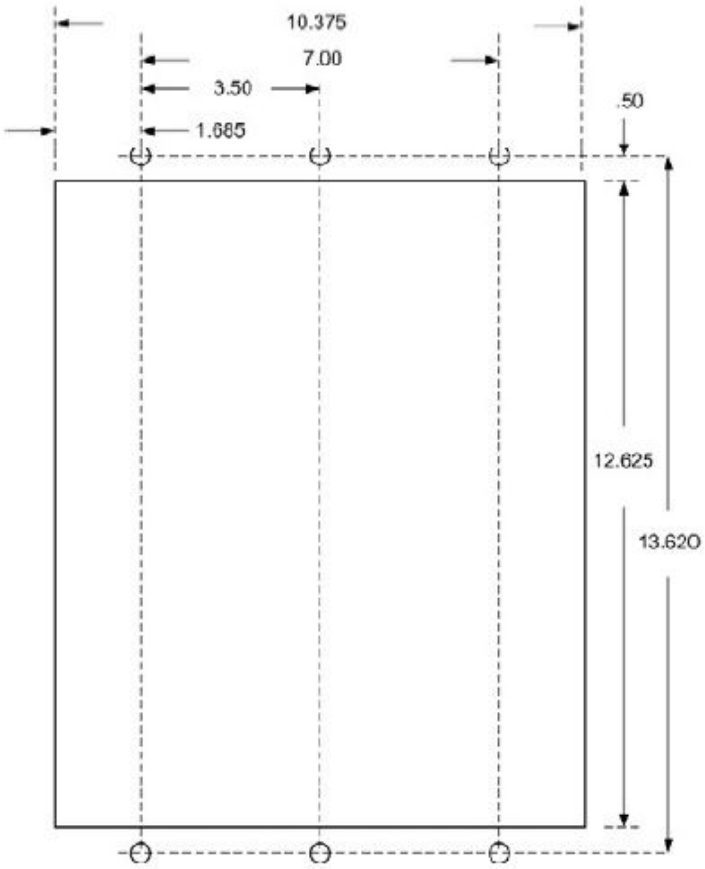

Figure 3: Flush Mount Dimensions (Hole Cutout)

To mount the enclosure:

1. Mount the unit using the six wall-mounting holes on the outside edge of the enclosure.
2. Use mounting hardware appropriate for the type of wall surface. Be sure the hardware and the surface are strong enough to handle the weight of the unit (25 lb).

2.2.3 Connecting the Main Power

The EliteIQ operates on 100 to 240 VAC, 50/60 Hz, using 1.5 A at 115 VAC or 0.7 A at 230 VAC. There are no selections required by the user to select the input power. The main AC is connected to the EliteIQ using the AC terminal block located inside the unit.

The terminal block is labeled as follows:

- L = Line (black)
- G = Ground (green or green/yellow)
- N = Neutral (white)

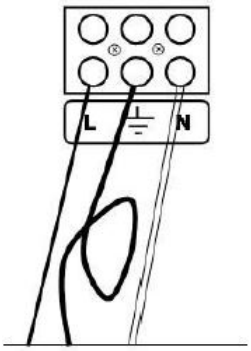

Figure 4: AC Power Wiring

For the NEMA enclosure, you must drill an access hole to bring the wires into the unit. The access hole should be drilled on either the bottom or the side of the enclosure.

⚠	**WARNING**
	BE SURE TO LOOK INSIDE THE UNIT PRIOR TO DRILLING SO THAT YOU CAN BE SURE THERE IS SUFFICIENT CLEARANCE FOR THE HOLE AND THE FITTING THAT YOU ARE USING.

2.2.3.1 AC Wire Size

The AC line wire should be 16 AWG or heavier wire.

2.2.3.2 Proper Grounding

The EliteIQ must be earth-grounded by connecting a true earth ground to the ground terminal designated by the ⏚ symbol.

Note: The Ground (green or green/yellow) wire should be at least 2 inches longer than the other wires as a safety precaution in case the line cord is pulled out of the unit.

Power surge protection is especially important if the equipment is located in a lightning-prone area. Contact Cattron at www.cattron.com/contact for additional information on surge protection offerings.

Note: Lightning damage is not covered under warranty.

⚠	**CAUTION**
	FAILURE TO SUPPLY A GOOD EARTH GROUND FOR THE AC POWER CAUSES THE ELITEIQ'S INTERNAL SURGE AND LIGHTNING PROTECTION TO BE INEFFECTIVE.

2.2.3.3 Optional DC Power Connection

For applications where standard AC power is not available, the EliteIQ can be powered by an external DC power source, as described in the following table.

DC Power Source	EliteIQ Operation
15-24 VDC	Same as with AC
12-24 VDC	Same as with AC except the supplied backup battery is not charged by the EliteIQ

To connect an external 15 to 24 VDC supply, disconnect the 3-wire harness from the processor board and then unscrew the three wires from the plug and attach your supply.

Using this plug, wire in the external DC supply as shown below:

Figure 5: Wiring an External DC Supply

2.2.3.4 Strain Relief

It is highly recommended that strain relief is used on fittings for all AC or DC lines and I/O wiring.

2.2.3.5 Power Fuse

The AC to DC power supply has a small fuse near the AC input that may blow if the input AC current or voltage exceeds specifications.

If no lights on the EliteIQ turn on when the power switch is put in the ON position, this fuse should be checked. Be sure to disconnect the EliteIQ from the primary power source prior to checking this fuse.

If the fuse is blown, it can be replaced with a GFE 4 A 250 V fuse.

2.2.4 Connecting the Input and Output Cards

All connections to I/O cards utilize quick disconnect plugs. This allows all I/O wiring to be made to the connectors prior to plugging the connectors into the specific I/O cards.

When using the EliteIQ mounted in a NEMA enclosure, it is necessary to drill holes into the enclosure. The holes should be drilled so that there is sufficient clearance from the sides and bottom of the enclosure for proper locking of a waterproof or conduit fitting.

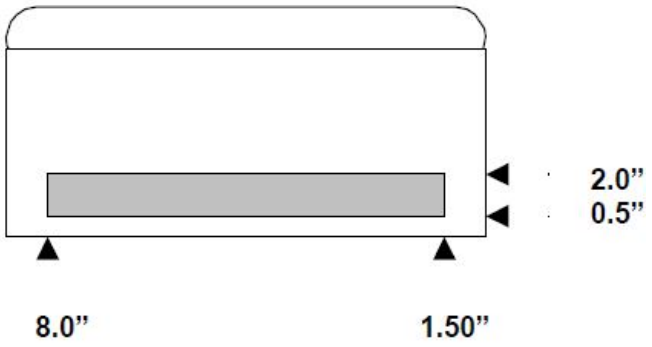

Figure 6: Recommended Drill Area for I/O Connections

When using the metal enclosure, access to the I/O cards is either through the conduit knock-outs on the sides of the enclosure or through the large removable access panel.

2.2.4.1 Installing I/O cards

All Input and Output cards can be positioned in any of the six I/O slots. For ease of wiring, you may want to leave blank spaces between cards if some of the slots are going to be empty.

There are three types of Input and Output cards for the EliteIQ: Digital Inputs, Analog Inputs and Relay Outputs. Each of these cards can be placed in any of the I/O slots of the EliteIQ. The slots are numbered from 10 through 60. When a card is positioned into a slot, its channels are numbered by adding the channel number on the card to the slot number.

Example: For an 8-channel digital input card in Slot 30, the channels are numbered 31-38.

To install a card:

1. Remove the I/O blank panel that covers the slot you are going to use.
2. Slide the I/O card into the slot.
3. Screw down the card into the slot using the two black captive screws that are attached to the I/O card.
4. When the card is properly seated, you will feel the card mating with the connector inside the enclosure.

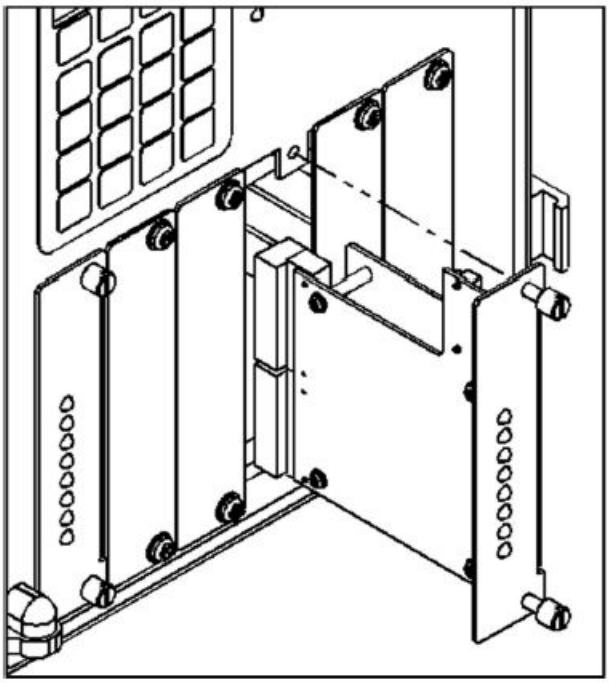

Figure 7: Detail of I/O Cards Held with Captive Screws

2.2.4.2 Digital Input Cards

The digital input boards are 8-channel modules. Each board is equipped with a quick disconnect plug that allows for easy connection of sensor wires. There are two connections for each sensor, a (+V) and a (IN) as labeled on the board bracket.

Inputs to the board may be either of the following:

- Dry contact
- 0-30 VDC signals (0-6 VDC is open, 6-30 VDC is closed)

Use 24 volts to complete the dry contact circuit to provide a means to break down the dielectric buildup on dirty switch contacts. The +V connection is 24 VDC.

Each digital input is designed to monitor a Normally Open (NO) or Normally Closed (NC) relay or voltage input.

Terminals for all input channels are located on the opposite end of the card from the LEDs. There are separate quick disconnect connectors for each group of four inputs. The channel numbers are located on the metal housing next to each connector.

Note that each connector has two terminals, (IN) and (+V). If all of your inputs are originating from a location near each other, you can wire all of the (+V) signals together on the EliteIQ connector and take a single (IN) signal to your sensors, as shown in Figure 9.

If your inputs are widely distributed, we recommend that you use two wires for each input, as shown in Figure 8.

Medium gauge (18 to 22 WG) twisted pair wire such as Beldon #8205 or equivalent is acceptable. You may also use a multi-conductor cable if all of your wiring is in the same panel.

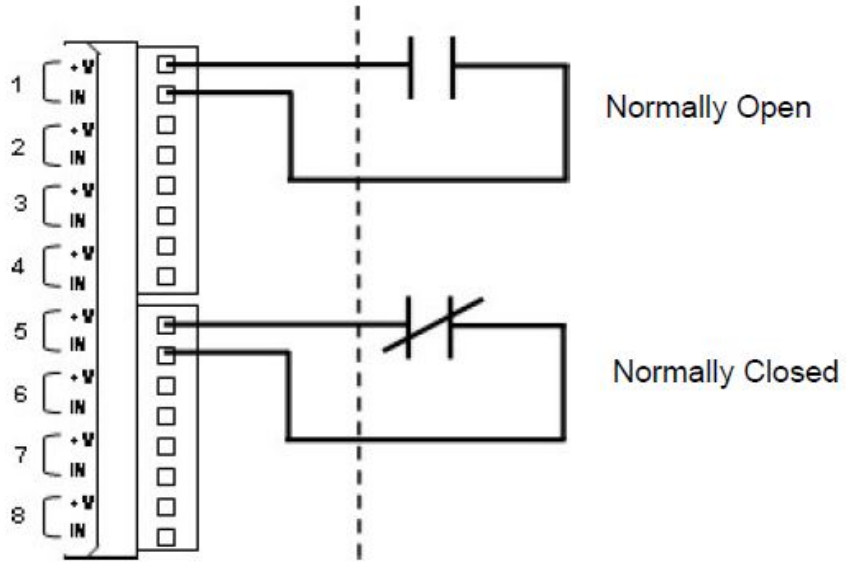

Figure 8: Preferred Input Wiring – Two Wires per Channel

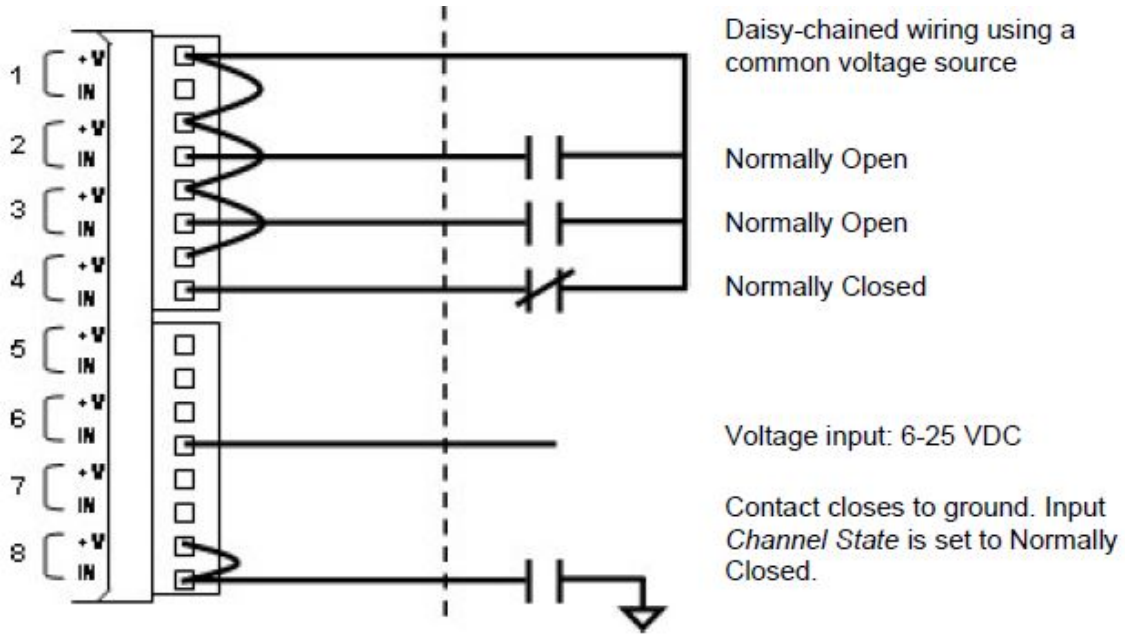

Figure 9: Daisy-Chained – Direct Voltage Input and Contact to Ground Wiring

The 24 VDC signal (+V) must be daisy-chained to all common points on the sensors that are being monitored to supply a power signal that can be sensed by the EliteIQ.

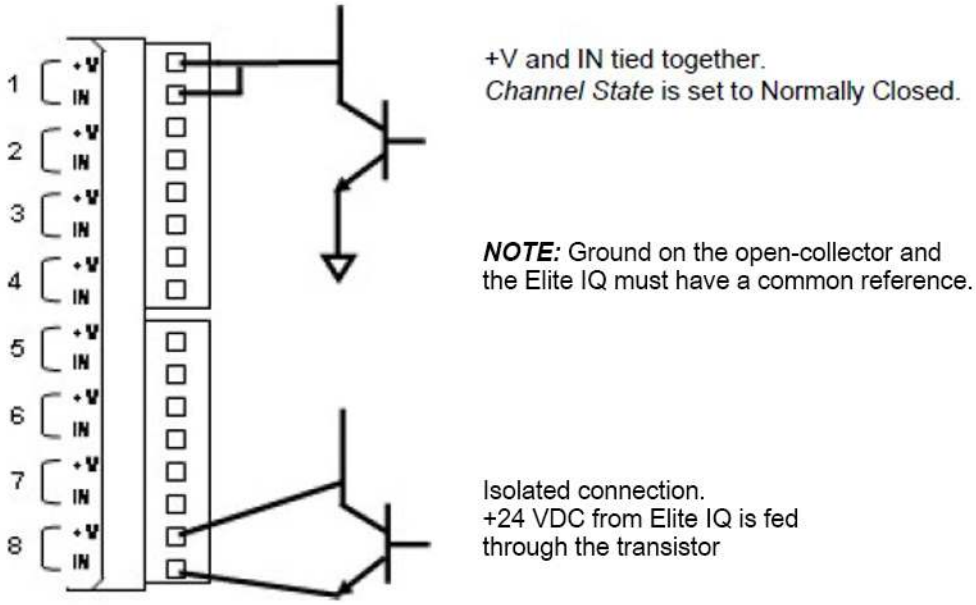

Figure 10: Open-Collector Connections

2.2.4.3 Analog Input Wiring

The analog input board has terminals for up to eight channels to be connected. Each board is equipped with a quick disconnect plug that allows for easy connection of sensor wires.

Unipolar Voltage	Current
0 – 1 V	0 – 20 mA
0 – 5 V	4 – 20 mA
1 – 5 V	
0 – 10 V	

The current inputs (0 to 20 mA and 4 to 20 mA) require a supply of power to operate. You may power these inputs using the 24 VDC supply that is on the top of the analog card or you may connect to an external power supply. The 24 VDC supply can source up to 300 mA on each analog input card; however, the total available in an entire system is only 500 mA.

Each channel of the analog input cards can accept either current or voltage inputs, which are configurable through the programming. There are no switches or jumpers to set.

Note: The (-) return on each Analog Input channel is connected to ground. If you are going to daisy-chain a current loop, then the EliteIQ connection must be the last in the loop.

Each input channel is independent of any other input channel. A fault on one channel does not affect the conversion result on the other channels.

Cattron recommends that you use medium-gauge wire (18 to 22 AWG) twisted pair.

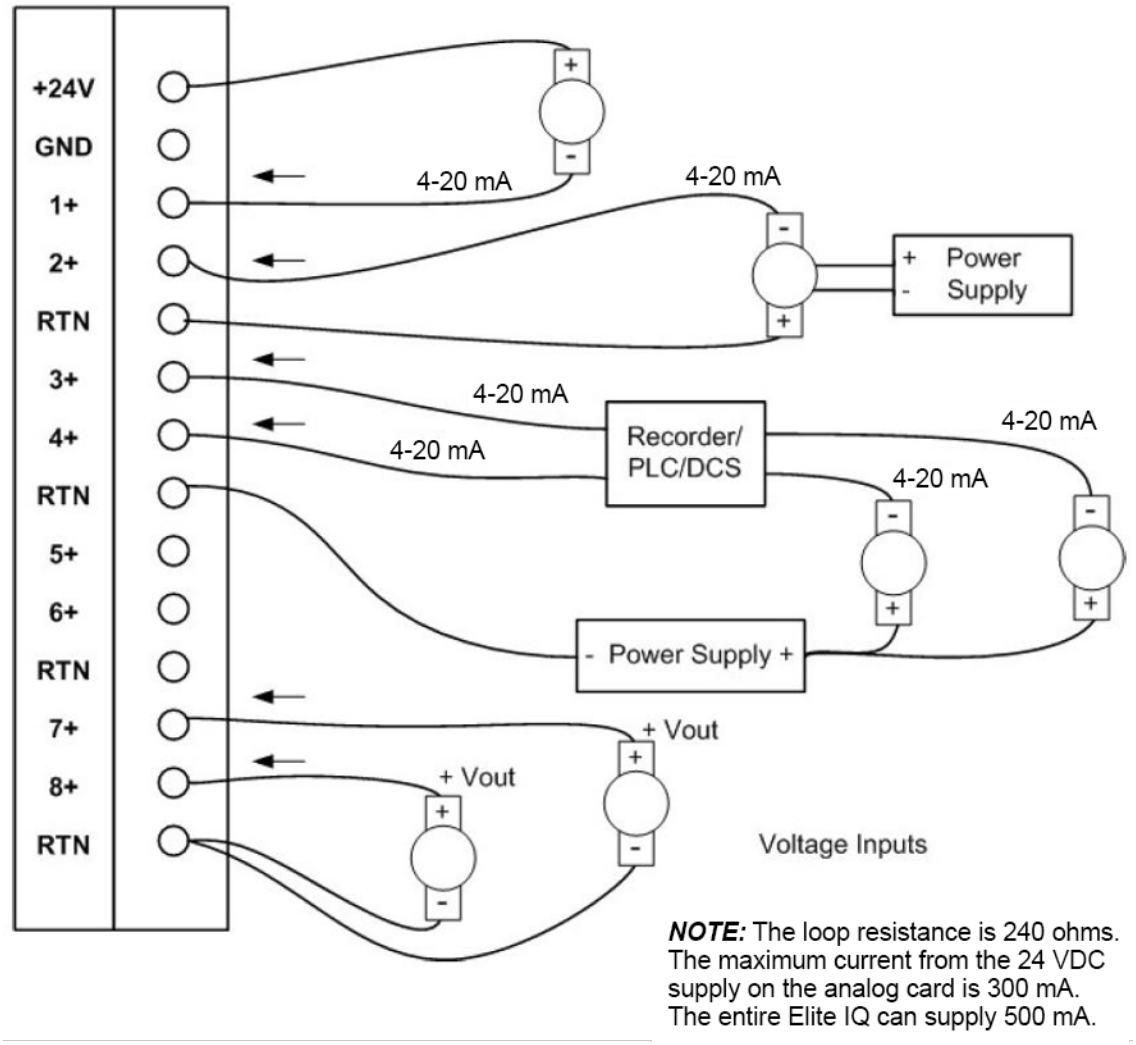

Figure 11: Analog 4-20 mA and Voltage Connections for Analog Input Cards

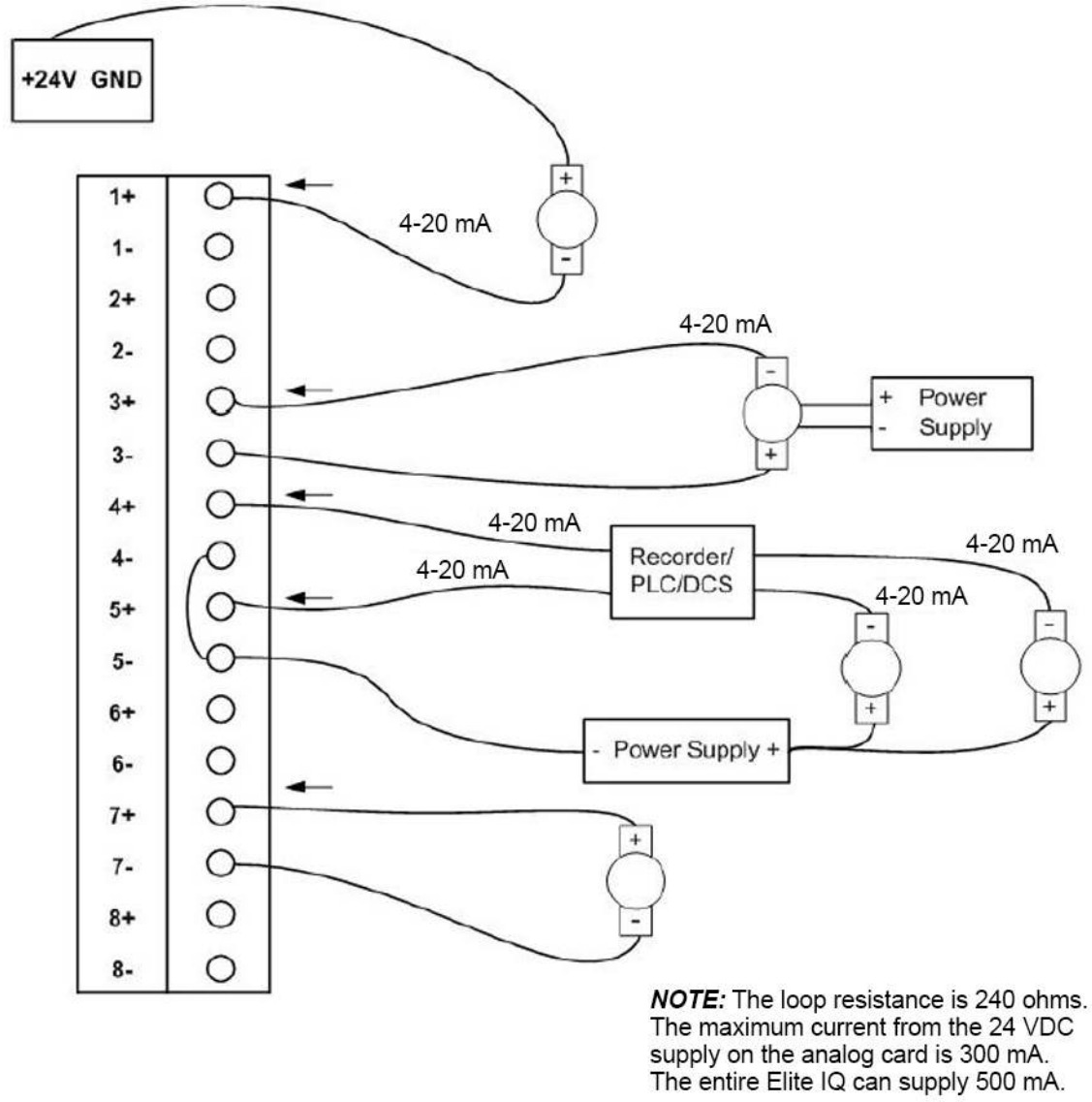

Figure 12: Analog 4-20 mA and Voltage Connections

2.2.4.4 Relay Wiring

Each relay output board has terminal connections for four relays. The EliteIQ can be configured for a maximum of 24 relays, each of which is independently controlled either directly or under alarm conditions.

Each board is equipped with two quick-disconnect plugs that allow for easy connection of sensor wires. There are three connections for each relay: *Normally Open* (NO), *Common* (C) and *Normally Closed* (NC), as labeled on the board bracket.

Relay outputs are typically used to control other equipment, lights, horns or visual alarm indicators.

Each relay output board has four Single-Pole Double-Throw (SPDT) relays. The switching capability of each relay is as follows:

- 8 A at 125 VAC
- 6 A at 277 VAC
- 5 A at 30 VDC

The following diagram shows proper wiring for a relay.

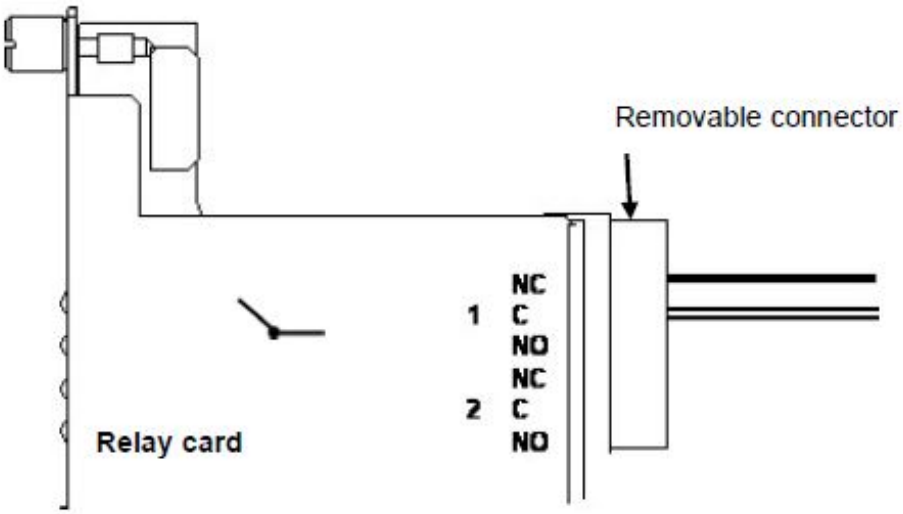

Figure 13: Relay Wiring

2.2.5 Testing the System

2.2.5.1 Turning on the EliteIQ

The power switch for the EliteIQ is located on the processor board mounted on the back of the front panel. To turn the power on, open the front panel and move the slide switch (SW1) to the ON position.

Figure 14 shows the EliteIQ board connections.

Power to the LTE modem is provided through connector J12.

Figure 15 contains a system wiring diagram, showing the connections between the EliteIQ box and the EliteIQ modem box.

The EliteIQ powers up either under primary power +VS (24 VDC) or battery backup VBAT (12 VDC). When the power is turned on, the EliteIQ will run power-up diagnostics to confirm operation of all standard and optional components.

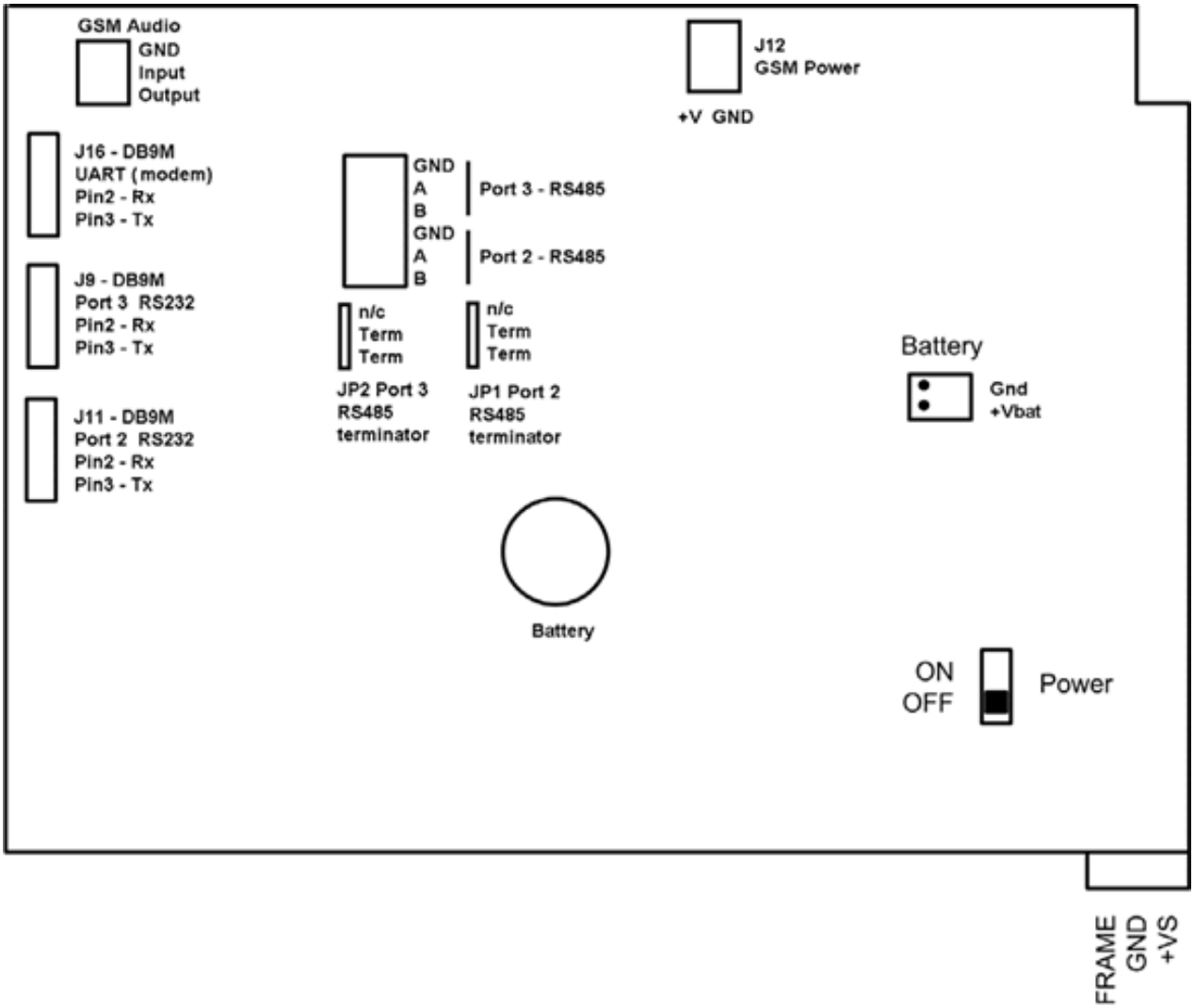

Figure 14: EliteIQ Board Connections

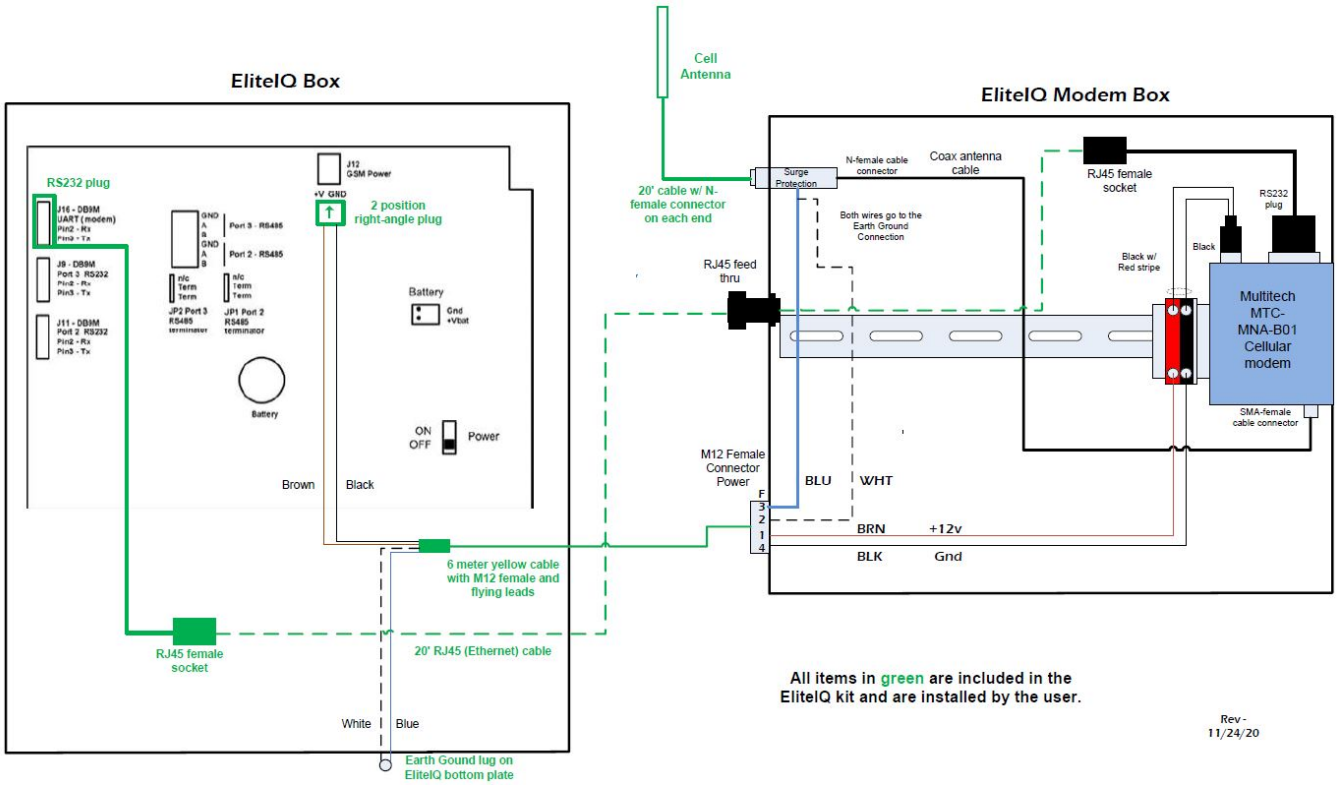

Figure 15: EliteIQ System Wiring

2.2.5.2 Verifying Battery Backup Connection

The EliteIQ has a 12 V sealed lead-acid rechargeable battery with either 7 AH or 5.5 AH. This provides approximately 24 hours of backup time with the unit fully configured. Actual backup time depends upon the number of input/output cards installed in the unit, the number of sensors being powered from the unit, temperature, battery age and dialing activity. The battery comes prewired with the red wire attached to the +VBAT terminal and the black wire attached to the –VBAT terminal. The replacement Part Number is EBAT002 for the 5.5 AH battery.

The EliteIQ automatically charges the battery whenever the power switch is turned on. The unit also includes special circuitry to prevent the battery from being damaged in the event of an extended power outage. When the battery runs down to 9 V, the unit automatically disconnects it, preventing deep-discharge damage. The battery remains disconnected until it charges back up to 12.3 V.

The battery provides at least two years of service before needing replacement.

When the EliteIQ is powered by the backup battery, the LEDs and display are put into a ‘dimmed’ mode to conserve power.

The main motherboard also includes a 3 V lithium battery to maintain the real-time clock and portions of the SRAM memory. Each battery provides 10 years of use. If the date and time in the EliteIQ are not retained when power is turned off then on, this battery needs replacing. The replacement battery Part Number is EBAT010.

Verification that the backup battery is properly connected is accomplished by requesting the status of the System Channel for the battery, channel 02.

⚠	**WARNING**
	THERE IS THE RISK OF EXPLOSION IF THE BATTERY IS REPLACED WITH THE INCORRECT TYPE. DISPOSE OF USED BATTERIES ACCORDING TO THE INSTRUCTIONS.

3 Quick Start

This section of the manual provides step-by-step instructions on how to do the following:

- Program for tracking pump run times (optional)
- Set up an Analog Input (optional)
- Pocket Reference card with easy commands for common functions
- Test the system

In addition, this section lists the default values that come shipped with the EliteIQ.

3.1 Default Values

The EliteIQ is shipped with factory-configured default settings that make it usable when it is installed, as shown in the following table.

Parameter	Default Setting
Digital Inputs	
Channel Name	DIN xx
Channel State	Set to Normally Open
Channel Mode	Set to Call on Alarm
Alarm Delay	3 seconds
Relay	None
Analog Inputs	
Channel Name	AIN xx
Input Type	4-20 mA
Decimal Position	1
Engineering Units	None
Zero Scale	0
Full Scale	100
Channel Mode	Set to Call on Alarm
Alarm Delay	3 seconds
Relay	None
Relay Outputs	
Channel Name	RLY xx
Channel Mode	Status Only
Pulse Duration	None

3.2 Quick Programming Steps

While there are a large number of options available in the EliteIQ, it is very easy to get the system up and operating if you first decide on what conditions are being monitored and what relays, if any, are going to be controlled.

3.2.1 Step 1 – Setup Digital Inputs (Skip if Not Using Digital Inputs)

Actions	Keystrokes
- Enter Program Mode	HOME 1
- If channel is NO, skip this; otherwise change to NC	9 <chan #> 0 1
- Enter system name using the keypad (see Section 4.1.3)	<channel name> #
- Back to top of menu	HOME

3.2.2 Step 2 – Setup Analog Inputs (Skip if Not Using Analog Inputs)

Actions	Keystrokes
- Go to Program mode	HOME 1
- Setup channel parameters	9 <chan #> 0 1
- 1 = 0-5 V, 3 = 0-10 V, 5 = 4-20 mA	<type>
- Number of digits to the right of the decimal	<decimal position>
- See Engineering Units (see 59)	<engineering units>
- Scale Input	0
- Value at 0 V or 4 mA	<zero scale> #
- Value at 5 V, 10 V or 20 mA	<full scale> #
- Enter channel name using keypad	<channel name> #
- See Alarm Mode 0 through Alarm Mode 4 (see 52)	2 <channel mode>
- Enter low limit in engineering units	<low limit> #
- Enter high limit in engineering units	<high limit> #
- Entry complete	HOME

3.2.3 Step 3 – Save Programming

Press HOME 2 to save the programming into non-volatile memory.

3.3 Testing the System

This test assumes the following:

- The EliteIQ has primary power
- The EliteIQ has a digital input wired into Channel V+ and IN on the digital input card
- The LED for channel 11 is solid green, indicating that it is enabled

To make sure the EliteIQ is working:

1. Force Channel 11 into alarm by closing the contact or relay that is connected to channel 11.
2. Verify that the system is in RUN mode (Run indicator is solid green). If not, press Home 2 Run to put the EliteIQ into RUN mode.
3. Check for the following:
   - The Channel 11 LED starts blinking red after 3 seconds (the default Alarm Delay)

To acknowledge the alarm at the operator panel:

1. Press Ack Clear.

   Note: If the EliteIQ is already making a call, you must press HOME to cancel the call.

2. The Channel 11 LED indicator goes from blinking (unacknowledged alarm) to steady ON (alarm acknowledged but not corrected).
3. Complete the test by correcting the alarm at Channel 11 by opening the contact or relay.
4. The Channel 11 LED indicator should return to the solid green state.

4 Operation

4.1 Overview

The EliteIQ provides real-time display and alarm notification of monitored conditions. Monitored conditions are connected to the EliteIQ as current or voltage signals to 8-channel analog input cards and dry or wet contacts into the digital inputs. There can be up to six 8-channel cards in a system for a total of 48 physical points.

Each input has several alarm limits associated with it, each of which can control a separate alarm relay. The EliteIQ can support 4-channel relay cards that can be connected to lights, horns, blowers, motors or other equipment.

The display shows the current status of alarms, input readings and all programming prompts and settings. Programming is performed by pressing keys on the keypad and both listening to and viewing the programming prompts. LEDs are provided for each sensor and relay and indicate the current state of each.

The EliteIQ can be programmed as follows:

- From the keypad
- From a locally connected PC

Figure 16: EliteIQ Front Panel

4.1.1 How to Use the Keypad

The keypad allows functions to be performed locally by pressing individual keys or sequences of keys. The keypad is divided into several sections, each with its own color, as described in the following table.

Keys	Functions
Red Keys	The RED keys are the typical phone-pad keys and are used to enter numbers to navigate through menus and select various options when programming. Several of the RED keys are split, where the top of the key has a number or symbol and the bottom of the key provides a function.
EXAMPLE	0
Green Keys	The GREEN keys provide quick single-key operation for specific functions. Each of the GREEN keys is split, as follows: • The top of the key indicates the operation performed when the system is in RUN mode • The bottom of the key indicates the operation performed when the system is in PROGramming mode
EXAMPLE	Disarm Bksp The Disarm/Bksp key allows you to disarm the system when in RUN mode and erase the previous key entry when in PROGramming mode.
Blue Keys	The BLUE keys are Quick Access keys. The bottom row of the display has text above each key that defines the function that is performed when that F-key is pressed.

4.1.2 Local Key Summary

Key	When in RUN Mode	When in PROGramming Mode
Red Keys		
1	Puts the EliteIQ into PROGramming mode.	
2		When at the top level of the menu, puts the EliteIQ into RUN mode. When not at the top of the menu, it functions as a ‘2’.
3		System Status
4		
5		
6		
7	Enables activation/deactivation of specified relays.	Relay Lists

Key	When in RUN Mode	When in PROGramming Mode
8		Options Setup
9		Channel Configuration
0	Displays status of specified channel.	
*****		
#		Completes an entry or backs up the menu.
Green Keys		
Clear/Ack	Locally acknowledges all unacknowledged alarms.	Clears any entry made for the specified function.
Reset/Arm		Resets the entry to the factory default.
Bksp/Disarm		Erases the previous key entry.
Home		Jumps to the top of the selected menu.
Blue Keys		
F1 F2 F3 F4	Quick Access key – the specific function is displayed above the key on the display.	

4.1.3 How to Enter Text for Names

The EliteIQ allows the user to enter names for the Site (Unit) and for each channel. Entering names is very similar to entering names on most cell phones that are used today.

On the bottom of each key, there are letters and numbers. To select a specific letter or number, press that key the designated number of times. For example, to enter the letter 'L', press the '5' key three times.

Note: The EliteIQ automatically capitalizes the first letter of each word. All subsequent letters are lower case.

Key to Press	Number of Times to Press the Key				
	1	2	3	4	5
1	space	1			+
2	A	B	C	2	.
3	D	E	F	3	,
4	G	H	I	4	-
5	J	K	L	5	*
6	M	N	O	6	#

Key to Press	Number of Times to Press the Key				
	1	2	3	4	5
7	P	R	S	7	/
8	T	U	V	8	Space
9	W	X	Y	9	Space
0	Q	Z	0	0	@
*	Erases previous letter				

4.1.4 RUN Mode Operations

The EliteIQ monitors all inputs and evaluates all alarm conditions when it is in the RUN mode. While in this mode, the EliteIQ automatically displays all enabled input channels. Enabled channels are those that have a green LED shown on the analog or digital input card or on a Modbus Master channel.

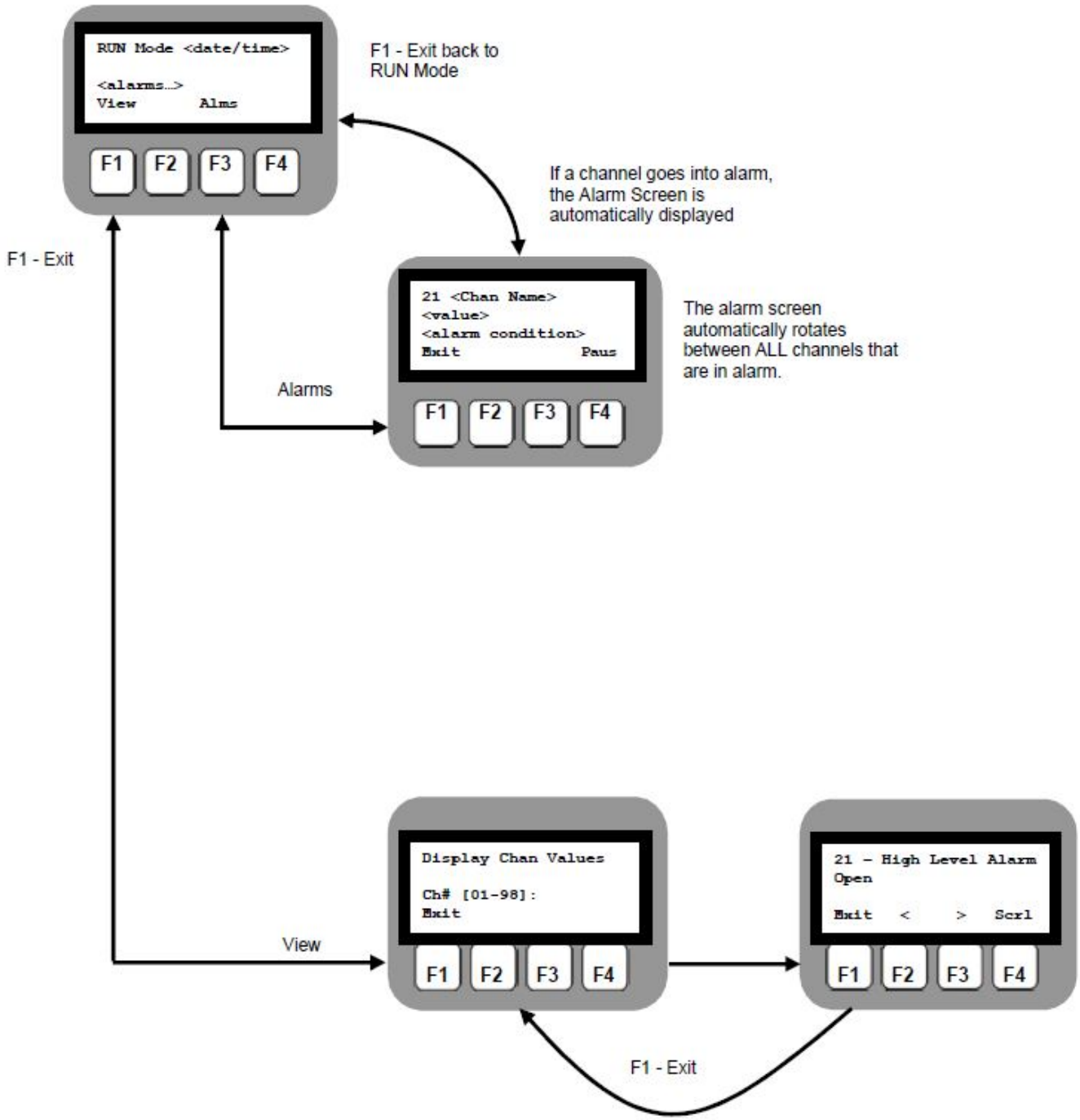
RUN Mode <date/time>
<alarms...>
View Alms
F1 F2 F3 F4
F1 - Exit back to RUN Mode
If a channel goes into alarm, the Alarm Screen is automatically displayed
F1 - Exit
21 <Chan Name>
<value>
<alarm condition>
Exit Paus
The alarm screen automatically rotates between ALL channels that are in alarm.
Alarms
F1 F2 F3 F4
Display Chan Values
Ch# [01-98]:
Exit
View
F1 F2 F3 F4
21 - High Level Alarm
Open
Exit < > Scrl
F1 F2 F3 F4
F1 - Exit

4.2 Viewing the Display

When in RUN mode, the EliteIQ shows the following display:

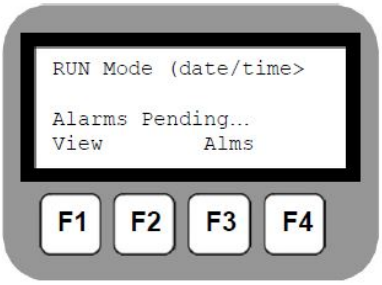

4.2.1 Automatic Alarm Screen

When any channel goes into alarm, the display automatically changes to show the current conditions of those channels.

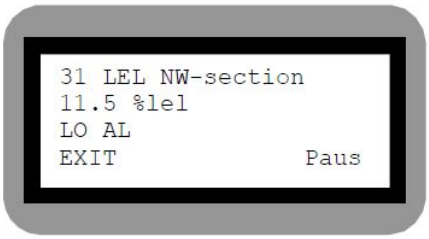

If any channel goes into alarm, the Alarm Screen is automatically displayed. All channels that are in alarm are automatically shown one at a time.

For example, Channel 31 is monitoring an LEL sensor in the NW section, which is at 11.5 %lel; it has exceeded the Low (LO) limit and is in alarm (AL).

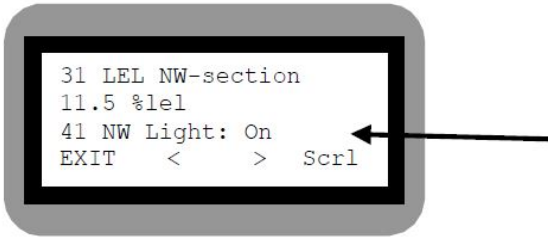

Pressing the Paus (F4) key will pause the screen on a channel of interest.

Displays all relays being controlled as well as the relay states.

Press the < or > keys to move to the previous or next channel.

Press the Scrl (F4) key to return to the scrolling display of all channels in alarm.

Valid Alarm Conditions	
AK	Alarm is acknowledged and still in alarm.
AL	Channel is in alarm and not acknowledged.
CM	Communications alarm – this channel is read via Modbus RTU and the communication is failing.
HI	In High alarm condition
LO	In Low alarm condition

4.2.2 How Alarms are Presented via LEDs

When a channel goes from the normal state to the alarm state, one or more of several notification methods are activated. Alarms can be presented in any of the following ways:

- A local LED changes color from Green to Green Blinking, then to Amber or Red Blinking
- Local activation of a specified relay
- Remote activation of a specified relay

Channel LEDs	
Color	**Definition**
Constant Green	Channel is normal.
Blinking Green	Channel is in alarm condition but has not met the Alarm Delay period.
Constant Amber	Channel has exceeded the Low Limit and is acknowledged.
Blinking Amber	Channel has exceeded the Low Limit and is NOT acknowledged.
Blinking Red	Channel has exceeded the High or Low Limit, or for a digital input is in the Non-Normal state, and is NOT acknowledged.
Constant Red	Channel has exceeded the High or Low Limit, or for a digital input is in the Non-Normal state, and is acknowledged.

4.2.3 System Channels

There are a few channels that are always present in each system. These are referred to as System Channels. They behave just like other Analog and Digital channels, and they can be modified as desired.

Channel Number	Channel Name	Function	Default Settings
01	Primary Power	Monitors the primary 15 VDC power supplied to the main processor board.	- Goes into alarm when primary power is lost for 30 seconds. - Limits are 14.0 and 16.0. - No Relay List is set.
02	Battery Power	Monitors the battery backup power.	- Goes into alarm when low battery voltage is detected for 120 seconds. - Limits are 10.0 and 14.0. - No Relay List is set.
04	Temperature	Monitors the onboard temperature.	- Status Only (no alarming) - Limits are 5.0 and 70.0 ºC. - No Relay List is set.

Channel Number	Channel Name	Function	Default Settings
06	Communication	Monitors Modbus RTU Master communications to Slave devices. If communication is lost for a period of time, then this channel and other Modbus channels go into alarm. **Note:** Typical causes for going into alarm are as follows: wrong baud rate, wrong Modbus ID or register number, or disconnected cable.	- Alarm Delay is 60 seconds. - No Relay List is set.
07	System Fault	Monitors each enabled analog (current) channel to confirm that there is not an open loop condition.	- Alarm Delay is 10 seconds. - No Relay List is set. - Limit is set to 0.5 mA.

4.2.4 Physical Channel Numbering

The channel numbering and function of each LED is shown below.

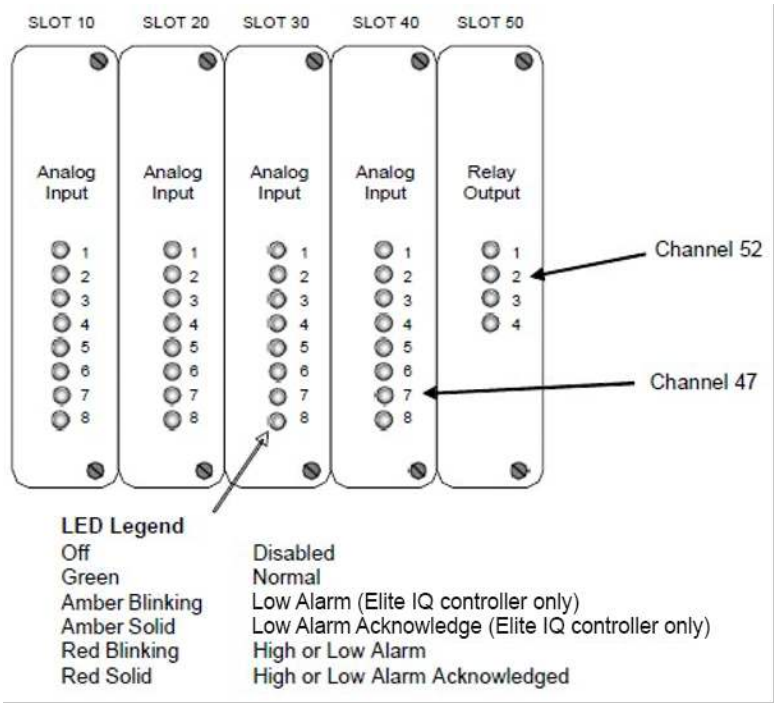

Figure 16: Channel Numbering

4.2.5 Modbus Channel Numbering

When the EliteIQ is a Modbus Master, channels are 'logical' instead of physical. Modbus channels are still Slot oriented and numbered like physical channels.

To read or write in a value from/to a Modbus Slave device, do the following:

- Configure a Slot in the EliteIQ to be a Modbus slot
- Configure a channel, as listed below, to read or write coils, holding, etc.

SLOT	Modbus Channel Numbers
10	11-18
20	21-28
30	31-38
40	41-48
50	51-58
60	61-68
70	71-78
80	81-88
90	91-98

4.2.6 RUN Mode Screens

Users can view Data and Alarms through the following process:

User Input	Display Shows
RUN MODE display F1 to go to the **View Channel** display F3 to go to the **Channels in Alarm** display	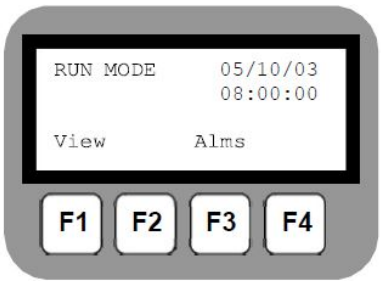

User Input	Display Shows
View Channel display F1 to return to the **RUN MODE** display F4 to go to the **Scrolling Channel** display Enter a channel number to go to the **View Data** display.	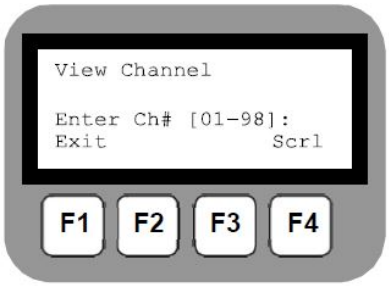
View Data F1 to go to **Exit** this display and return to **View Channel** display F2 to move to the previous channel F3 to move to the next channel F4 to go to the **Scrolling Channel** display	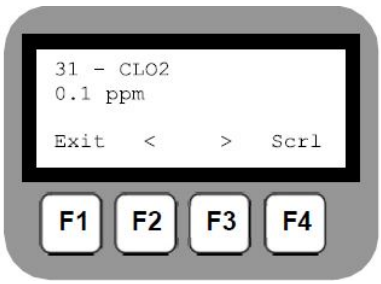
Scrolling Channel display F1 to exit to the **View Channel** display F4 to go to the **View Data** display Automatically scrolls through all enabled channels.	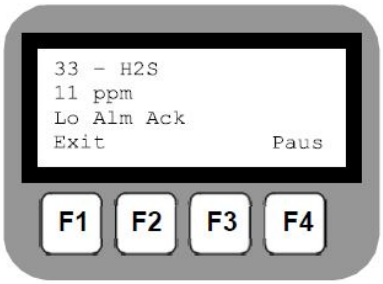

User Input	Display Shows
Channels in Alarm display F1 to exit to the **RUN MODE** display F2 to display the **previous channel** in alarm F3 to display the **next channel** in alarm F4 to **pause** on this specific channel	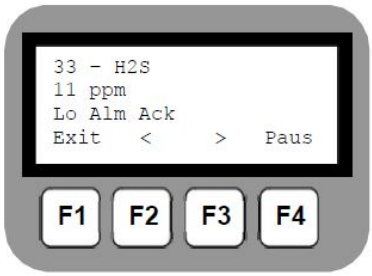
	OR
If the EliteIQ is a Modbus Master and there is a communications error with reading a channel, then channel 06 (Communications channel) goes into alarm, if the Channel Mode is Call on Alarm and the Alarm Delay has expired. The “Id:” field displays the Modbus IDs that cannot be read (for example, channels using IDs 23 and 201).	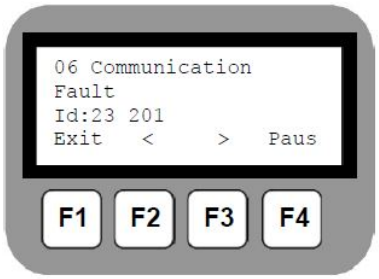
	OR
If no channels are in alarm.	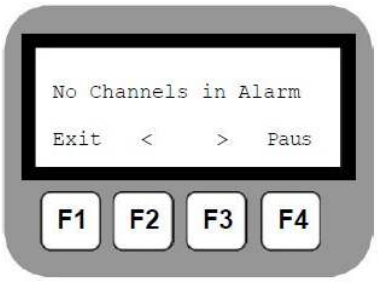
Activate/Test Relays Press F1 to exit to the **RUN MODE** display. Keypad 7 to enter **RELAY** and **Output** functions Keypad 1 to Activate a single Relay Keypad 2 to Activate a Relay List Keypad 3 to set a Modbus Holding Register	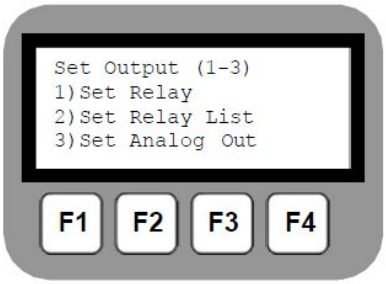

4.2.7 Acknowledging Alarms

Alarms can only be acknowledged from the RUN mode. They can be acknowledged as follows:

- Locally using the keypad
- If an Ack input channel has been designated

4.2.7.1 From the Front Panel

At the front panel, press the Ack key to acknowledge a channel that is in alarm. All channels that are in alarm are acknowledged at the same time. The Red blinking LED channel indicator changes to Red steady On, indicating that the specific channel is still in alarm, but it has been acknowledged.

4.2.7.2 Acknowledge Input Channel

If an Acknowledge Input Channel has been specified, then alarms are acknowledged when this input goes to the Non-Normal condition.

5 PROGramming Mode from the Keypad

5.1 Overview

PROGramming mode allows the user to do the following:

- Change system wide settings
  - Name of the unit
  - Date/Time
  - PROGramming Access Code
- Change the settings for an input
  - Low and High limits
  - Scaling
  - Relays to control
  - Name of the channel
  - Engineering units

PROGRAM mode is entered by pressing the [1 PROG] key while on the RUN mode display.

RUN mode is re-entered by pressing the [2 Run] key from the PROGRAM mode display.

Note: If an Access Code has been entered, the user is prompted to enter it before PROGramming mode is entered.

5.1.1 Display – Selecting a Menu Item

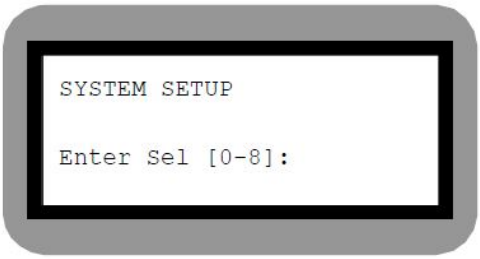

5.1.2 Display – Changing a Setting

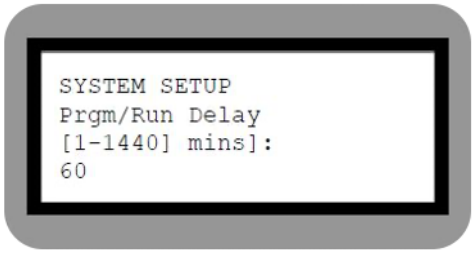

Menu – System Setup
Setting to change – Prgm to Run Delay
Valid values: 1 to 1440 minutes
User entry – 60

5.2 System Wide Settings

These settings affect the overall operation of the system. These settings are typically adjusted during the initial installation, but they can be modified at any time.

Note: Press the # key to do the following:

- Move to the next program setting
- Move up a level in the menu
- Accept your entry

PROGramming Mode display

[3] to enter System Setup

```
PROGRAM MODE

System Ready
Enter Sel[0-9]:
```

Keypad Entry	
0	- System Identification ▼ - Alphanumeric ID
1	- Access Code
2	
3	- Date and Time
4	- System Delays Program to Run mode delay ▼ - Disarm to Arm delay ▼ - Arm/Disarm Relay List
5	- Firmware Version
6	- Reset to System Defaults

Keypad Entry	
7	- Reset Counters
8	

5.3 Program Channel Settings

These settings affect the operation of the channel monitoring a sensor. These settings are typically adjusted during the initial installation, but they can be modified at any time.

Note: Press the # key to do the following:

- Move to the next program setting
- Move up a level in the menu
- Accept your entry

9 to enter Channel Configuration

Enter either a physical channel number or a Modbus channel number.

Note: Channel numbers are two digits; the first digit is the SLOT and the second digit is the CHANNEL in the slot.

```
CHAN CONFIGURATION

Chan Num[01-98]:
```

5.3.1 Analog Inputs

Selections 0 through 6 allow you to modify the default settings or adjust any settings you desire. Full descriptions of each setting are found in the Glossary.

```
CHAN CONFIGURATION
Analog Input Chan 11
CO
Enter Sel[0-6]:
```

Keypad Entry	
0	– Input Type Specify if input is 4-20 mA or voltage ▼ – Decimal Position # of digits to the right of the decimal position ▼ – Engineering Units Engineering units for this input – Scale Input signal (yes or no) ▼ – Zero Scale Value in engineering units at the lowest input level ▼ – Full Scale Value in engineering units at the highest input level ▼ – Minimum Counts Value in counts of the minimum input (e.g., 4 mA = 786 counts, count range 0-4095) ▼ – Maximum Counts Value in counts of the maximum input (e.g., 20 mA = 3931 counts, count range 0-4095)
1	

Keypad Entry	
2	- Channel Mode 0 – Disabled, channel is not being used 1 – Status Only 2 – Call on Alarm (Mode 0) ▼ Low Limit (0 – 999999999) ▼ High Limit (0 – 999999999) ▼ Positive Rate of Change (0 – 999999999) ▼ Negative Rate of Change (0 – 999999999) ▼ Rate of Change Period (0 – 60 minutes) 3 – Report Only
3	- Alarm Delay 0 – as fast as the EliteIQ can issue an alarm
4	- Continue Notification if Return to Normal
5	
6	- Relay List Relay List to activate/deactivate going in/out of alarm

5.3.2 Relay Outputs

After you have entered a channel number that corresponds to a Relay Output, you have three options, as follows:

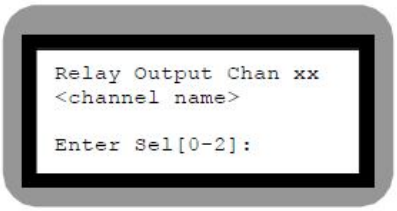

Keypad Entry	
0	– Pulse Duration Amount of time the relay is energized until it automatically de-energizes 0 – Relay stays on
1	
2	- Channel Mode 0 – Disabled, channel is not being used 1 – Status Only

5.3.3 Digital Inputs

After you have entered a channel number that corresponds to a Digital Input, you have six options, as follows:

```
CHAN CONFIGURATION
<channel name>

Enter Sel[0-6]:
```

Keypad Entry	
0	– Channel State 0 – Normally Open 1 – Normally Closed
1	
2	- Channel Mode 0 – Disabled, channel is not being used 1 – Status Only 2 – Call on Alarm (Mode 0) 3 – Call on Limit ▼ Totalizer Limit (0 – 999999999) ▼ Duration Limit (0 – 999999999) ▼ Limit Reset Period (0 – 999999 seconds)
3	- Alarm Delay 0 – as fast as the EliteIQ can issue an alarm (about 210 ms)

Keypad Entry	
4	- Continue Notification if Return to Normal
5	
6	- Relay Relay to activate/deactivate going in/out of alarm

5.4 Relay List Setup

When any input goes into an alarm condition, a list of relays can be controlled. Each list can contain up to nine physical relays (located in the same controller or communicated with via Modbus). There are a total of 98 Relay Lists available, numbered 1 to 98.

Initially, each physical relay is assigned to the Relay List of the same number; e.g., physical relay 41 would be the first relay in Relay List 41.

Using Relay Lists allows the user to define different relay activation combinations once and then reference the Relay List for several inputs. This is particularly useful for controlling multiple relays (like a light and a contact to a DCS system) for all inputs.

Relay Lists can be set up at any time.

5.4.1 Relay Operations

From the Program Mode –

There are two main operations available from the Relay function 7:

- Activating/deactivating relays in a Relay List
- Assigning relays to a Relay List

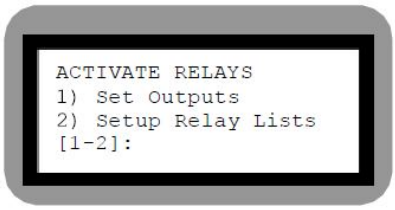

Press 2 to Setup List

Keypad Entry	
2	– Relay List Setup 1-98 Relay List Number ▼ Relay List Position ▼ Relay Channel Number

6 Modbus RTU Master

6.1 Overview

The Modbus Master Interface enables the EliteIQ to read input values from a Modbus sensor, PLC or Modbus Slave device and write relay control values to a Modbus sensor, PLC or Modbus Slave device. The connection uses the RS-232 serial connector on the EliteIQ. The protocol is Modbus RTU, where the EliteIQ is the Master and the Modbus sensors, PLC or Modbus I/O is the Slave.

The option supports a combination of up to 72 total I/O channels – up to 48 of which can be physical I/O in the EliteIQ.

The I/O in the Modbus Slave can be any combination of analog (holding registers) or digital points (coils).

Values that are read from the Modbus Slave are interpreted by the EliteIQ the same as if they were physical I/O in the EliteIQ. All the alarm and control logic within the EliteIQ operate on data coming from Modbus registers.

The communications link between the EliteIQ and the Modbus slave devices is monitored several times a second. If the communications link stops functioning after repeated attempts, a Communications Channel (06) alarm is initiated. This alarm is treated exactly like any other system alarm, allowing the system to call out, drive local relay or issue reports.

Port 2 or Port 3 can be used as a RS-232 connection (DB9) or as a RS-485 connection (5-position plug). RS-232 Port 2 is J-11, RS-232 Port 3 is J-9 and both RS-485 ports are on J-17.

The RS-232 port is configured as a DTE device, as follows:

Pin 2	RCV
Pin 3	XMT
Pin 5	GND

6.2 Initializing the Modbus Master Interface

The Modbus Master Interface is setup by defining the following:

- Serial port 2 or 3 can be selected as a Modbus Master – default baud rate is 38400
  - You can also set the Max Idle, Max Timeout and RS-232 or RS-485 mode
- EliteIQ I/O slots can be identified as Modbus I/O – default is that no slots are enabled as Modbus I/O slots

There are eight Modbus I/O channels per Slot. You can enable as many slots as you have purchased. For example, if you purchased a 32-channel Modbus Master configuration, then you can enable any four slots which do not have physical I/O cards attached.

All of these can be defined through the integral keypad.

6.2.1 Modbus Master Channel Setup

When you enter a channel number that is enabled as a Modbus channel, you see the display to the right.

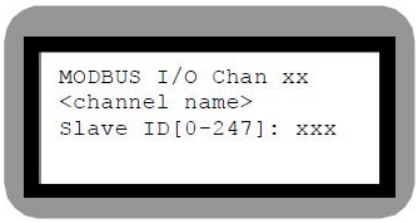

Keypad Entry

Slave ID (0 indicates read from an EliteIQ channel)

▼

Register Type

▼

Register Number

Enter Selection [0 – 7]

The remainder of the setup depends on the Register Type:

- Register Type = Read Coil or Read Input Status
  - Remainder of the configuration is exactly like a Digital Input
- Register Type = Write Coil
  - Remainder of the configuration is exactly like a Relay Output
- Register Type = Read Holding, Read Input Register or Write Holding
  - Remainder of the configuration is exactly like an Analog Input
- Register Type = Read Packed Bits
  - You must enter the specific Bit in the 16-bit word

6.2.2 Modbus Master Port Setup

Port 2 or Port 3 is used as a Modbus Master port.
It can be used as an RS-232 or RS-485 connection.

Set the port up through the Options Menu, Function 8.

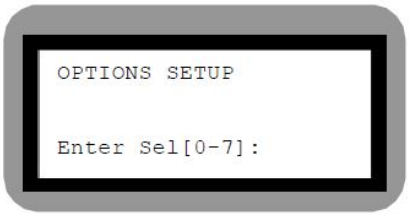

Keypad Entry	
1	Port 2 or Port 3 Setup
or	Port Mode – set to 3 for Master
2	▼
	Baud Rate
	▼
	Max Idle
	▼
	Max Timeout
	▼
	RS-485

6.3 Mapping EliteIQ Channels to Modbus Registers

I/O channels in the EliteIQ are mapped to Modbus registers by providing three pieces of information, as follows:

- **Modbus ID** – ID of the Modbus Slave
- **Register Type** – which corresponds to the Function Code
- **Register Number** – number of the register for the particular Function Code

All of these items are entered in the Channel Configuration (Function 9) section for each individual channel.

Supported Register Types			
EliteIQ Register Type	Description	Type of Channel in the EliteIQ	Modbus Function Code
1	Read Coil Status	Digital	01
2	Read Input Status	Digital	02
3	Read Holding Register	Analog	03
4	Read Input Register	Analog	04
5	Write Coil (Set Coil)	Relay	05
6	Write Holding (Set Holding)	Analog	06
7	Read Packed (Read Bits)	Digital	03

7 PC/Laptop Access

The EliteIQ can be accessed from a PC or laptop to view the current status of all channels, view the event log, modify programming, etc.

The connection to the EliteIQ is via the serial RS-232 port 2 or port 3.

Note: If using serial port 2 or 3, it must be in the Diagnostics mode, which means it cannot be used when the EliteIQ is also active as a Modbus Master or Slave.

Follow these steps to bring up the Diagnostics Menu:

1. Set serial port baud rate. PROG 8 <serial port> (for the port that you are going to use)
2. Enable diagnostics port. Set the Port Mode to 1 (diagnostics)
3. Connect your serial cable (null modem).
4. The following menu is displayed.

The following is the main menu and Site setup sub-menu as shown from Tera Term. Items in **BOLD** font are those that a user would most likely change.

```
_______EliteIQ_______

Site Name : Elite-LTE
Modem     : MNA1
Version   : v7.0.6 04/14/20
Date/Time : 05/19/20 15:48
Asset ID  : 355154081518637
Modem FW  : AT&T
CELL RSSI : 99
CELL Reg  : NoSrch
GPRS Reg  : Unknown
Network   : ????
Server    : Primary
MSISDN    :
Local IP  :
DataQue   : 37

1) Config
2) Timers
3) Data
4) Events
5) Reports
6) Setup
7) Maint

Cmd => (enter a command from 1-7)
```

Command (1 – View Config)

```
******** View Config********

1) Site
2) Options
3) CELL
4) FTP
5) Report
6) Serial
7) Report Flags
8) Relay Lists
9) Channels
V) Virtual Chan
A) All

...>  (enter an option from 1 to A)
```

Option (1 – Site Config)

```
__________Site Config (1)_________________

Name                (1): Elite-LTE
Access Code         (2): -001
Daylight Savings    (3): Yes
Time Zone           (4): Central
Next Call Delay     (5): 8 secs
Pump1 Cycle Chan    (6): 0
Pump2 Cycle Chan    (7): 0
Pump3 Cycle Chan    (8): 0
Pump4 Cycle Chan    (9): 0
PROG->RUN Delay     (11): 60 mins
DISARM->ARM Delay   (12): 60 mins
ARM/DISARM Relay    (13): 0
MODBUS Slots        (10): 0
MODBUS Mode         (14): single
MODBUS Scan Rate    (15): 5 secs
Open Loop Limit     (18): 0 cnts
AIN Slope & Offset (16 & 17):
Slot 0: slope=10050 offset=1
Slot 1: slope=10050 offset=1
Slot 2: slope=10050 offset=1
Slot 3: slope=10050 offset=1
Slot 4: slope=10050 offset=1
Slot 5: slope=10050 offset=1
Slot 6: slope=10050 offset=1
```

Option (4 – FTP Config)

```
__________FTP Config (4)___________________

Report Type   (1): None
Put Path      (2): ./
Get Path      (3): ./
Get Filename  (4):
Port          (5): 21
IP            (6): antxftp.com
Username      (7): ftpuser@antxftp.com
Password      (8): 11okeypoe3
Mode          (9): Passive
```

Option (6 – Serial Ports Config)

```
__________Serial Config (6)________________________

Port:                        (1)      (2)      (3)      (4)(detected)
-----------------------------------------------------------------------

  Mode                  (1): None     Master   Debug    Cell
  Baud                  (4): 115200   57600    57600    57600
  Parity               (11): None     None     None     None
  Data Bits             (9): 8        8        8        8
  Stop Bits            (10): 1        1        1        1
  Max Idle (chars)      (5): 3        3        3        3
  Resp Timeout (secs)   (6): 2        2        2        2
  RS485                 (2): 0        0        0        0
    Slave ID            (3): 126      126      126      126
    On Delay  (msecs)   (7): 1        1        1        1
    Off Delay (msecs)   (8): 1        1        1        1
```

Option (9 – Channel Config)

```
__________Channel Config (9)___________________

-- 0      1      2      3      4      5      6      7      8      9 --
  SYS   DIN8   empty  empty  AIN8   empty  DOUT4  empty  empty  empty

Slot # [0-9]: 1 (viewing the Digital Input configuration)
-----------------------------------------------------------------------
Type/Number         : DIN/11
Name             (1): Chan 11
Mode             (2): Report Only [4]
Normal           (9): Open [0]
Alarm Delay      (3): 60 secs
Relay List      (16): 0

  . . .
```

```
__________Channel Config (9)_________________

-- 0      1      2      3      4      5      6      7      8      9 --
  SYS   DIN8   empty  empty  AIN8   empty  DOUT4  empty  empty  empty

Slot # [0-9]: 4 (viewing the Analog Input configuration)
-------------------------------------------------------------------
Type/Number                : AIN/41
Name                   (1): Chan 41
Mode                   (2): Report Only [4]
Type                  (21): 4-20mA [5]
Decimal Position      (22): 1
Engineering Units     (32): ... [0]
Scale Value            (9): yes
Zero Scale            (10): 0.0 [0]
Full Scale            (11): 100.0 [3e8]
Zero Scale Counts     (12): 786
Full Scale Counts     (13): 3931
Alarm Delay            (3): 60 secs
Low Limit             (18): -1 [ffffffff]
High Limit            (20): -1 [ffffffff]
Pos Rate of Change    (15): -1 [ffffffff]
Neg Rate of Change    (16): -1 [ffffffff]
Rate of Change Intvl  (14): 0 mins

Low Alm Relay List    (23): 0
High Alm Relay List   (26): 0


__________Channel Config (9)_________________
-- 0      1      2      3      4      5      6      7      8      9 --
  SYS   DIN8   empty  empty  AIN8   empty  DOUT4  empty  empty  empty

Slot # [0-9]: 6
-------------------------------------------------------------------
Type/Number          : DOUT/61
Name             (1): Chan 61
Mode             (2): Status Only [1]
Pulse Duration  (14): 0 secs
```

8 Glossary

Item	Description
Access Code	A four-digit code that is entered to prevent any unauthorized personnel from entering the Programming Mode. **Note:** When entering Programming Mode, either locally or remotely, the access code must be entered.
Accumulated Time	The Digital Input card can be used to accumulate, or add up, all the time that the input signal has been in the On, or Non-Normal, state. The accumulator adds all the seconds for each time the signal goes into the On state. You program the limit for this condition using the Duration Limit under the Channel Configuration for the specific channel being monitored. Time is reported and displayed as Days Hours:Minutes:Seconds. Accumulated time is reported as Days, Hours, Minutes and Seconds.
Acknowledge Alarms	**Locally:** Press the ACK key on the keypad while the EliteIQ is in RUN mode.
Acknowledge Input Channel	A digital input channel can be used to acknowledge alarms. When this channel goes into the Non-Normal condition, it will acknowledge all active alarms.
AK	Shown on the display and in reports. Indicates the channel is in alarm and has been acknowledged.
AL	Shown on the display and in reports. Indicates the channel is in alarm.
Alarm Code	The EliteIQ uses alarm codes on the display, status reports and alphanumeric pager alarms to indicate the condition of an alarm or input, as follows: OP – open on a digital input CL – closed on a digital input CM – communication alarm on a Modbus input/output OL – open-loop condition on an analog input TL – totalizer limit alarm on a digital input DL – duration limit alarm on a digital input LO – low limit alarm on an analog input HI – high limit alarm on an analog input -R – negative rate of change alarm on an analog input +R – positive rate of change alarm on an analog input
Alarm Delay	The amount of consecutive seconds an input needs to exceed a Limit before it goes into alarm. [0-65535 seconds] (default is 3 seconds). Channel LED blinks green during this time.

Item	Description
Alarm Mode 0	This mode defines a normal region that is above the Low Limit and below the High Limit. 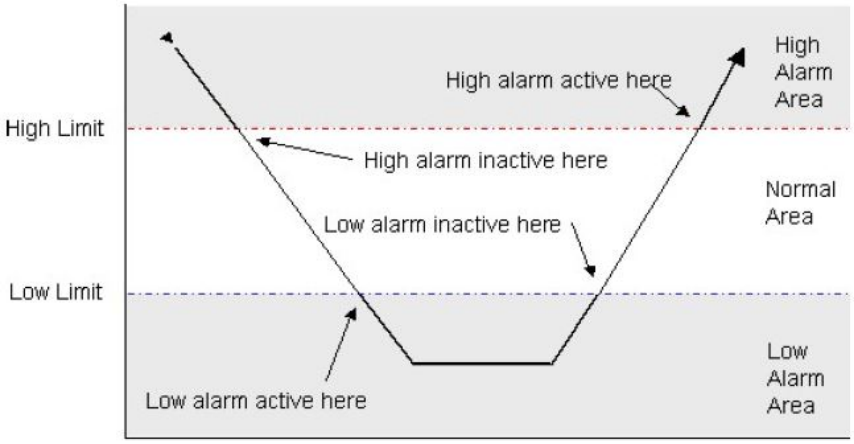 Channel Mode – **Call on Alarm** On Low alarm active – alarm call out and Low relay list activation On High alarm active – alarm call out and High relay list activation On Low alarm inactive – Low relay list deactivation On High alarm inactive – High relay list deactivation
Alarm Mode 2	This mode defines a normal region that is above a Low and High Limit. The Low Limit is below the High Limit. 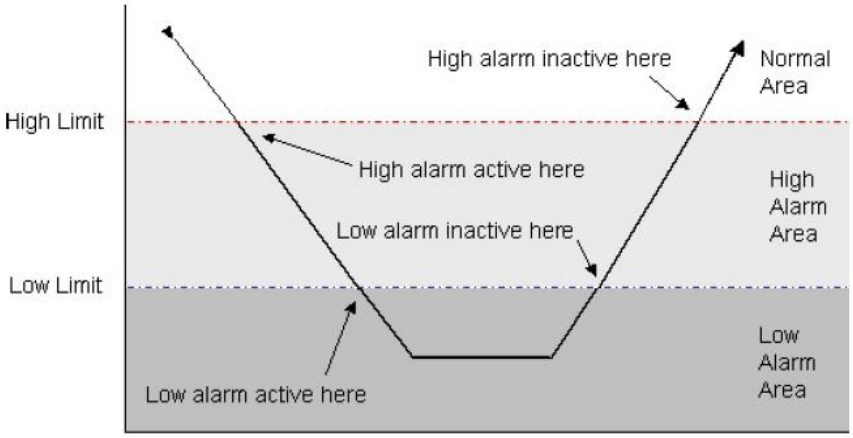 Channel Mode – **Call on Alarm Mode 2** On Low alarm active – alarm call out and Low relay list activation On Low alarm inactive – Low relay list deactivation On High alarm active – alarm call out and High relay list activation On High alarm inactive – High relay list deactivation

Item	Description
Alarm Mode 3	This mode defines a normal region that is below a Low and above a High Limit. 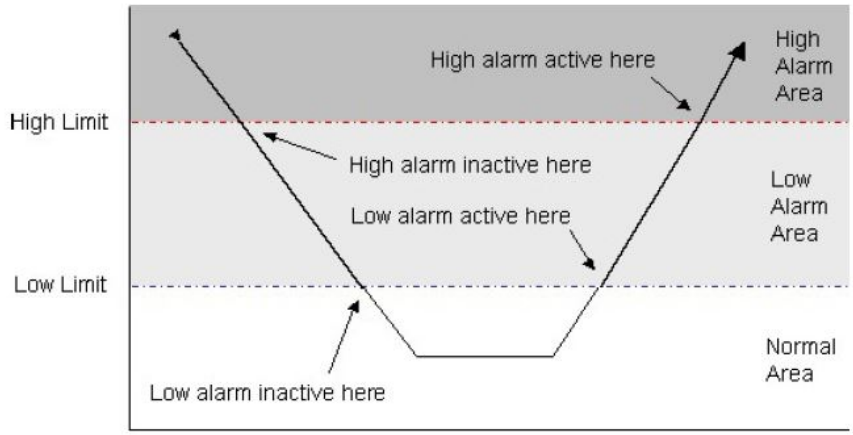 Channel Mode – **Call on Alarm Mode 3** On Low alarm active – alarm call out and Low relay list activation On Low alarm inactive – Low relay list deactivation On High alarm active – alarm call out and High relay list activation On High alarm inactive – High relay list deactivation
Alarm Mode 4	This mode defines two normal operating regions, one above a High Alarm Limit and one below a Low Alarm Limit. 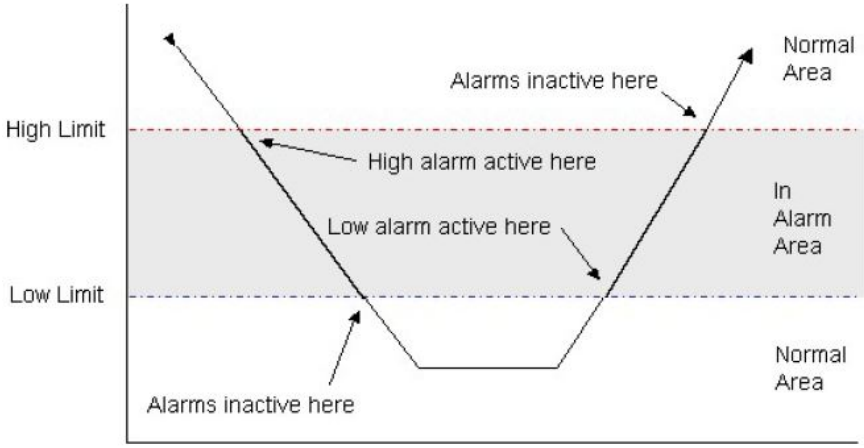 Channel Mode – **Call on Alarm Mode 4** On Low alarm active – alarm call out and Low relay list activation On High alarm active – alarm call out and High relay list activation On Alarms inactive – Low and High relay list deactivation
Alarm Screen	When any channel goes into an alarm state, the display is automatically changed to show the current conditions of those channels. The user has the option to Pause on a channel of interest to view all relays which are being controlled by that channel.

Item	Description
Alarm State	When a sensor's value exceeds a Low or High Limit, the channel goes into an Alarm State. When these transitions occur, Relay Lists can be controlled. Specify what condition you want the relay to assume when these transitions occur, as follows: 0 – De-energized 1 – Energized 2 – No change (disabled)
Alarm Types	Input alarms are generated from either Digital Inputs or Analog Inputs. The Digital Inputs have three types of alarms: • Contact closure (or open) • Totalizer (counting pulses) • Duration (total time in a condition) The Analog Inputs have four types of alarms: • High Limit • Low limit • Positive rate of change • Negative rate of change Each of these alarms is independent of the other.
Amber LED	Channels LEDs can be amber, which indicates that the input is in the Low Alarm region. Blinking indicates in alarm and not acknowledged. Solid indicates in alarm and acknowledged. (Available on EliteIQ controllers only).
Analog Input	Analog inputs are voltage or current inputs that vary over a predefined range, typically 4-20 mA or 1-5 V. These signals are connected to Analog Input cards and programmed to provide values in engineering units. EliteIQ operates on analog inputs in engineering units, not counts. Since you are measuring in engineering units, this makes it easier to specify the alarm limits that you use. You specify the conversion from current (mA) or voltage (V) to engineering units using the Decimal Position, Zero Scale, Full Scale and Engineering Units under the Channel Conversion. Use the Zero to specify the Engineering Unit value at the lowest input signal being monitored. The Full Scale is the range of the input signal in Engineering Unit value. The Digits to the right of the decimal is used to specify the precision of all the limits, zero and span. The Zero Sign specifies whether the zero value is negative or positive. If the Engineering Unit is set to gpm (gallons per minute) or gph (gallons per hour), the EliteIQ automatically computes a totalized flow. The totalized flow is displayed on the View channel screen and on Status reports. The totalized flow will continue to increase until the counter is reset using the Reset Counter function.

Item	Description
Analog Input Offset Factor	This factor, together with the Analog Input Scaling Factor, allows the user to adjust an entire analog input card to match a calibrated source. The offset corresponds to the zero adjustment. **Note:** These are preset at the factory and typically never adjusted in the field.
Analog Input Scaling Factor	This factor, together with the Analog Input Offset Factor, allows the user to adjust an entire analog input card to match a calibrated source. The scaling factor corresponds to the slope adjustment. **Note:** These are preset at the factory and typically never adjusted in the field.
Arm	ARMed mode is signified by a green RUN LED. In this mode, the EliteIQ is monitoring all inputs and performing all alarm functions.
Arm/Disarm Relay List	A relay list that is activated whenever the EliteIQ is Disarmed and deactivated whenever the EliteIQ is Armed.
Backup	See Reset to System Defaults.
Battery Backup	The standard 12 VDC internal backup battery maintains operating power to the EliteIQ for a minimum of 24 hours at 86°F in case of primary power loss. The switchover to battery operation is automatic; no operator intervention or reprogramming is required. The POWER STATUS indicator on the front panel changes from a steady green light to a blinking red light, indicating that the system is now on battery power and the Primary Power alarm has not yet been acknowledged. If the battery charge drops below a certain level, the message “System battery is low” is delivered in the System Status report, and the BATTERY STATUS indicator blinks red, indicating that the Low Battery alarm is active and has not yet been acknowledged. While primary power is available, the BATTERY STATUS indicator blinks green when the internal battery is charging. The battery requires 20 hours to recharge completely. If the battery fails to take a charge while the system is operating from primary power, the System Status report includes the message, “System battery is bad.” When you hear this message, we strongly recommend that you replace the battery.
Battery Channel	Channel 02 – monitors the backup battery voltage. This voltage is typically 12 VDC. Low and High alarm limits can be specified for alarm relay activation or call outs. The battery is automatically charged when necessary. The Battery LED indicates if the battery is fully charged (green), being charged (green blinking), or in alarm (red and red blinking).
Baud Rate	The serial port baud rate for communication as a Modbus Master, Slave or a diagnostics/programming port.

Item	Description
Bits	A Read Packed Bits operation reads a 16-bit word from the Modbus Slave device. The EliteIQ can extract a single bit from a Holding Register and use that as the input to a digital input channel. The EliteIQ numbers the bits from 1 to 16, with 1 being the least significant bit.
Bksp Key	Delete the character just entered.
Blinking LEDs	Indicates the channel has an unacknowledged alarm.
Channel Conversion	Sub-menu to set conversion parameters for an analog input channel. Options include the following: • Input Type • Decimal Position • Zero Scale • Full Scale • Engineering Units
Channel Mode	Indicates whether the channel is Disabled, Status Only or one of the Alarm modes as follows: Disabled (0) — The LED is out and the channel is not being scanned or processed. Status Only (1) — Digital and Analog – the LED is always green and the channel is being scanned, but not evaluated for alarms. Relay – the channel is active and can be energized or de-energized. Call on Alarm (2) — Digital – goes into alarm when the channel goes from the Normal setting to the Non-Normal setting (e.g., from Open to Closed on a Normally Open channel). Analog – goes into alarm when the value exceeds either the Low or High Limits. Alarm Mode 2 (4) — Analog – defines a normal region that is below a Low and above a High Limit. Goes into alarm when the value exceeds the Low or High Limit. The LED goes Amber when it exceeds the Low limit and goes Red when it exceeds the High limit. Alarm Mode 3 (5) — Analog - defines a normal region that is below a Low and above a High Limit. Goes into Low alarm when the value falls below the Low limit. Goes into High alarm when the value exceeds the High limit. The LED goes Amber when the value falls below the Low limit and goes Red when the value exceeds the High limit. Alarm Mode 4 (6) — Analog - defines two normal operating regions, one above a High Alarm Limit and one below a Low Alarm Limit. The LED goes Amber if the value transitions from the lower Normal region to above the Low limit. The LED goes Red if the value transitions from the upper Normal region to below the High limit.

Item	Description
Channel Name	A 20-character name associated with a channel.
Channel State	Defines the input as follows: 0 – is Normally Open 1 – is Normally Closed A signal connected to the (IN) connection of a Digital Input is considered Open when its voltage is less than 3.5 VDC. A signal connected to the (IN) connection of a Digital Input is considered Closed when the voltage is greater than 5.0 VDC.
Clear Key	Clear the current value being entered from the keypad.
CM	Shown on the display and in reports. Indicates there is a Communications error between the EliteIQ and a Modbus device. Confirm that the cable is connected, the baud rate is correct, and the Modbus ID and register number are correct.
Communication Channel	Channel 06 – monitors Modbus Master communication out the serial ports 2 and 3, as a RS-232 or RS-485 port. If communication fails, this channel goes into alarm. Typical causes for failure are baud rate mismatch, incorrect Modbus Slave ID and incorrect Modbus Slave register number.
Date/Time	Specify the current date and time and the format of the date and time. The valid formats for the date and time are as follows: 0 mm/dd/yy hh:mm:ss (default) 1 yy/mm/dd hh:mm:ss 2 dd.mm.yy hh:mm:ss 3 dd/mm/yy hh:mm:ss 4 dd mm yy hh:mm:ss
Day	Specifies a day of the week or a holiday. 1 – Sunday through 7 – Saturday 8 – Holiday list
Decimal Position	Number of digits to the right of the decimal. The default is 1, but can be adjusted from 0 to 9. For example, if the Decimal Position is 3, then values are presented as: xx.xxx.
De-energize on Alarm Acknowledge	If enabled, the relays energized for this alarm condition are de-energized when the alarm is acknowledged (default is disabled).
Diagnostics Port	If enabled, then the serial ports can be connected to a laptop or PC for viewing diagnostics (status, event log, etc.) or for programming. The laptop/PC should use Tera Term or some other terminal emulation program. When connected, press the Enter key and the “Password:” prompt is displayed. The password is “DialogElite”. A menu of options is displayed.

Item	Description
Digital Input	The Digital Input card can be used to detect voltage transitions in addition to dry contact transitions. The range of voltage for digital inputs is 0-30 VDC, meaning that any voltage between 6 and 30 V is detected as a closed condition and anything below 6 VDC is considered open. Digital Input cards are available with eight channels per card. The channels are numbered exactly like analog or relay channels, adding the Slot number to the individual channel on the card. Alarm conditions for Digital Inputs are determined based on the Channel State – Normally Open or Normally Closed. When the input transitions out of the Normal condition, the channel goes into alarm. When the channel goes into alarm, relays can be activated or deactivated and alarm call outs can be performed.
Disabled	Channel is not scanned or evaluated for alarms. Channel LED is not lighted.
Disarm	DISARMed mode is signified by a red blinking RUN LED. In this mode, the EliteIQ is monitoring all inputs but will NOT perform any alarm operations including turning on/off relay.
Disarm to Arm Delay	The EliteIQ automatically returns to the Armed mode after this length of time. [1-1440 minutes] (default is 60 minutes).
Dry Contact	Digital input connections to the EliteIQ are typically dry contacts, meaning that the device or switch that is connected to the EliteIQ is not supplying any voltage or current.
Duration Limit	The Duration is typically used to provide a Run-Time meter. If a Duration Limit is specified, then alarm calls or relay activation occurs when the Duration value meets the Duration Limit. For example, if you want to know when a motor ha run 100 hours, then you would specify the Duration Limit to be 100 hours or 360,000 seconds. The duration counter is the total time that an input has been in the Non-Normal condition from the last time that it was reset. The alarm associated with the duration is the Duration Limit, which is specified in seconds from 0 (disabled) to 999,999,999. Whenever the channel goes to the Non-Normal state, the duration counter is incremented for every second that it is in the Non-Normal state. When the duration counter reaches the Duration Limit value, an alarm is generated. The duration counter continues to be incremented until it is reset. It is reset automatically when the Limit Reset Period expires.

Item	Description		
Engineering Units			
	0 – none	12 – million gph	24 – kilowatts
	1 – milliamps	13 – liters / hour	25 – degrees
	2 – amps	14 – cubic inches / second	26 – psi
	3 – volts	15 – cubic feet / minute	27 – percent
	4 – degrees C (°C)	16 – cubic feet / hour	28 – pH
	5 – degrees F (°F)	17 – pounds / hour	29 – Hz
	6 – gallons	18 – feet / second	30 – kHz
	7 – liters	19 – inches	31 – million gal
	8 – pounds	20 – feet	32 – ppb
	9 – kilograms	21 – meters	33 – % vol
	10 – gallons / minute (*)	22 – ppm	34 – % lel
	11 – gallons / hour (*)	23 – watts	
	(*) If selected, the EliteIQ will automatically compute the total flow.		
Enter (#) Key	Enter the current entry. Backup one level in the menu.		

Item	Description
Event Log	The event log stores the 1000 most recent events that have occurred in the EliteIQ. The information that is stored includes alarm conditions, call outs, and call ins. All events are logged with the following information: • <Date and Time> <Event logged information>

Event Type	Event Logged
System Alarms	
Primary Power	Primary power returned to normal Primary power failure Alarm acknowledged
Battery Power	Battery power low Battery power returned to normal Alarm acknowledged
Digital Input Channel Alarm	
Mode = Status Only	ON OFF
Analog Input Channel Alarms	
Mode = Call on Alarm	Low limit alarm Low limit alarm cleared High limit alarm High limit alarm cleared Positive rate of change alarm Negative rate of change alarm Positive rate of change alarm cleared Negative rate of change alarm cleared Alarm acknowledged
Relay Output Channels	
	Relay energized Relay de-energized

Firmware Version	Displays the version of the code running in the EliteIQ.
Full Scale	The full scale engineering unit value for an analog channel. For example, on a 4-20 mA signal, the engineering unit value at 20 mA.

Item	Description
Global Option	The Global option provides a quick method to set all entries to a specific value. The Global option can be used to set Channel parameters. The Global option works for an individual parameter at a time. To enable the Global option, you enter [*] [4] prior to entering your new parameter value. When global is enabled, you hear “Global Enabled”. After you enter your new parameter setting, you hear “Global Disabled”.
Green LED	Indicates the channel is in the Normal condition and is enabled.
HI	Shown on the display and in reports. Indicates the channel has a High alarm.
High Limit	A five-digit value that defines the high alarm limit for a channel in engineering units. For example, 00200 would be 20.0 if the Decimal Position is 1.
HOME Key	Go to the top of the Programming Menu.
Input Type	Selections are: 0 – 0 to 1 V 1 – 0 to 5 V 2 – 1 to 5 V 3 – 0 to 10 V 4 – 0 to 20 mA 5 – 4 to 20 mA
IO Register Type	See Register Type.
Limit Reset Period	Specifies the amount of time in minutes from the start of the day, that the duration counter is incremented and totalizer is accumulated until it is automatically reset.
LO	Shown on the display and in reports. Indicates the channel has a Low alarm.
Low Battery	See Battery Channel.
Low Limit	A five-digit value that defines the low alarm limit for a channel in engineering units. For example, 00200 would be 20.0 if the Decimal Position is 1.
Max Idle	The maximum amount of time the EliteIQ waits for another character to be received after the last one was received.
Max Timeout	The maximum amount of time the EliteIQ waits for a response when it transmits a message.
Maximum Counts	The maximum number of counts read from a Modbus Holding Register. This is only used if the value in the Holding Register is in counts and needs to be scaled.

Item	Description
Minimum Counts	The minimum number of counts read from a Modbus Holding Register. This is only used if the value in the Holding Register is in counts and needs to be scaled.
Modbus ID	A value between 1 and 247 to uniquely identify each Slave device.
Modbus Master	The EliteIQ can act as a Modbus Master through the serial RS-232/RS-485 ports 2 or 3. Set the Port Mode to 3, for Master. When this option is enabled, the EliteIQ acts as a Modbus Master to read/write registers from one or more Modbus Slave devices. To define channels, a slot (1-9) must be enabled to be a Modbus Slot. This is performed through Options Setup selection 3 (MODBUS Master Setup). Enable one or more slots (cannot contain physical cards). For each slot enabled, eight channels are available to be inputs or outputs. For example, if Slot 7 was enabled, then channels 71 to 78 would be available for use.
Modbus Slot	As a Modbus Master, the EliteIQ reads/writes to logical channels. These channels are associated with slots, just like physical I/O. A slot enabled for Modbus allows eight channels to be used for reading or writing to a Modbus Slave device. Channels are numbered just like physical channels. For example, Slot 50 would be channels 51 to 58.
Negative Rate of Change	If the analog reading falls at a rate that exceeds the Negative Rate of Change within the time specified by the Rate of Change Period, then the channel goes into alarm.
Next Call Delay	The amount of time to wait after completing this call until the next transmission to the backend is made. [0-3600 seconds] (default is 30 seconds).
Normally Open/Closed	Used on Digital Inputs to set the Normal, or not in alarm, condition of the input. When the input changes from this normal condition, the channel goes into the alarm state.
Open Loop Limit	For all Analog Input channels that are 0-20 mA or 4-20 mA. Defines a limit that if the input falls below, the EliteIQ will assume the input is an Open Loop. When an Open Loop condition exists, channel 07 (System Fault) goes into alarm.
Options Menu	See Options Setup.

Item	Description
Options Setup	This Menu has eight selections to set the various Options that can be purchased with the EliteIQ. **Option Number** / **Description** 0 – Port 1 LTE modem port setup 1 – Port 2 Setup 2 – Port 3 Setup 3 – Modem Setup 4 – Modbus Master Setup 5 – Open Loop Limit; Analog Input Scaling Factor; Analog Input Offset Factor 6 – Acknowledge Input Channel 7 – Pump Control (see separate product manual)
Port Mode	For serial ports 2 and 3, the Mode defines how the port is going to be used. 0 – Not used 1 – Debug or diagnostics 2 – Not used 3 – Modbus Master 4 – Not used
Ports	The available ports in the EliteIQ are as follows: 0 – UART used for LTE modem 1 – Port 2 2 – Port 3
Positive Rate of Change	If the analog reading rises at a rate that exceeds the Positive Rate of Change within the time specified by the Rate of Change Period, then the channel goes into alarm. For example, if the Positive Rate of Change is set to 100.00 and the Rate of Change Period is set to 15 minutes, then if the analog reading exceeds 100.00 in less than 15 minutes, the channel goes into alarm.
Power Fail	See Primary Power Channel.
Primary Power Channel	Channel 01 – monitors the primary power to the main processor board. This power is typically 24 VDC. Low and High alarm limits can be specified for alarm relay activation or call outs. The Primary Power LED indicates if the battery is fully charged (green), being charged (green blinking), or in alarm (red and red blinking).

Item	Description
PROGRAM Mode	In this mode the user can make modifications to any and all settings. **Note:** RUN mode must be entered after making programming changes for those changes to be saved permanently. **Note:** While in PROGRAM Mode, relays are activated when conditions warrant, but alarm calls are not made.
Program to Run Delay	The EliteIQ automatically returns to the Run mode after this length of time. [1-1440 minutes] (default is 60 minutes).
Pulse Counting	The Digital Input card can be used to count pulses, or the number of times that the input signal goes into the On, or Non-Normal, state. The maximum frequency that can be counted is 2 Hz with a required duty cycle of 50%. This means that the signal coming into the EliteIQ must be active (high or low) for 250 ms in order for it to be counted as a pulse. When counting pulses, you program the Totalizer Count Limit under the Channel Configuration for the specific channel being monitored. The EliteIQ counts all of the pulses that occur, incrementing the Totalizer value for each pulse. When the Totalizer Count Limit is reached, an alarm condition exists and the Totalizer continues to count pulses until it is reset, either upon acknowledgement or when the Limit Reset Period is reached. The EliteIQ reports the value of the Totalizer Count either in the default value of counts, or in Engineering Units. In both cases, you can also specify a Scaling Value by which to multiply each count. An example of using a Scaling Value is to total the flow through a pipe over a given time, where each pulse represents a specific amount of volume. For example, you could set the Scaling Value to 100 to indicate 100 gallons per pulse.
Pulse Duration	An amount of time that a relay stays energized. [0 – 86400 seconds] (default is 0). 0 keeps the relay on until another action turns the relay off. Another condition can override this and de-energize the relay.
Rate of Change	Positive or Negative. Specifies an alarm limit based on the rate the sensor input is changing. Specified as a value over the Rate of Change Period. The maximum period of time is 60 minutes.
Rate of Change Period	Specified as 1 to 60 minutes. This is the amount of time that the channel value must change by the Positive or Negative Rate of Change to go into the alarm condition. For example, to go into alarm if a tank level drops more than 1000 gallons in a 15 minute period, set the Rate of Change Period to 15 minutes and the Negative Rate of Change to 1000.
Read Packed Bits	See Bits.
Red LED	Indicates the channel has a High alarm. If blinking, the alarm is not acknowledged. If solid, the alarm is acknowledged.

Item	Description
Redial After Ack Delay	When alarms are acknowledged, the EliteIQ automatically starts the alarm call out sequence after this delay if the current alarm conditions still exist. If other alarms occur before this delay expires, alarm calls are performed immediately.
Register Number	A valid Modbus register number from 1 to 9999. Some PLCs refer to registers as a combination of the Register Type and the Register Number. For example, a PLC may reference register 40100. In the EliteIQ, this would be a Read Holding and Register Number 100. To read a channel from the same EliteIQ, the register number is based on the channel number in the EliteIQ:

	EliteIQ Channel #	Register Number
System Channels	01 – 08	1 – 8
Slot 10	11 – 18	9 – 16
Slot 20	21 – 28	17 – 24
Slot 30	31 – 38	25 – 32
Slot 40	41 – 48	33 – 40
Slot 50	51 – 58	41 – 48
Slot 60	61 – 68	49 – 56
Slot 70	71 – 78	57 – 64
Slot 80	81 – 88	65 – 72
Slot 90	91 – 98	73 – 80

Register Type	Modbus register type of the Slave Modbus device being read. Valid values are as follows: 1 – Read Coil 2 – Read Input Type 3 – Read Holding Register 4 – Read Input Register 5 – Write Coil 6 – Write Holding 7 – Read Packed Bits (from Holding Register)
Relay Channel	If configuring an input, this is the physical relay or relay list that is to be activated. Physical relays are numbered 11-14, 21-24 . . . 61-64. To control a relay on a remote device, enter 99.

Item	Description
Relay List	A list of up to nine physical relays that can be controlled when any input changes from the Normal to Non-Normal condition or from the Non-Normal back to the Normal condition. A relay list consists of the following: **Relay List Number** **Position** / **Physical Relay #** 1 2 3 4 5 6 7 8 9 Each physical relay is preconfigured to be the first relay in the List Number that matches the Physical Relay number. So, if you only need to control a single relay, you do not need to create a Relay List, as it is already configured. For example, **If a Relay Card is in Slot 20** **Relay List Number** / **Position** / **Physical Relay #** 21 / 1 / 21 22 / 1 / 22 23 / 1 / 23 24 / 1 / 24
Relay State from High Alarm	Specify the relay behavior when the input transitions from the High Alarm: 0 – De-energize 1 – Energize 2 – No change (disabled)
Relay State from Low Alarm	Specify the relay behavior when the input transitions from the Low Alarm: 0 – De-energize 1 – Energize 2 – No change (disabled)

Item	Description
Relay State to High Alarm	Specify the relay behavior when the input transitions to the High Alarm: 0 – De-energize 1 – Energize 2 – No change (disabled)
Relay State to Low Alarm	Specify the relay behavior when the input transitions to the Low Alarm: 0 – De-energize 1 – Energize 2 – No change (disabled)
Repeat Interval	Number of minutes until this action is performed again. [0-1440 minutes] (default is 1440 minutes). 0 is never.
Reset Counters	Selection 7 under System setup. Allows the user to reset one or all counters for a channel.
Reset Key	Reset this entry to the factory default.
Reset to System Defaults	Performing this function erases all user programming and sets the system back to the factory settings. **Note:** This is only written to permanent memory when the EliteIQ is put into RUN mode. If you do not want to reset the system, turn the EliteIQ off *before* returning to RUN mode. Hidden underneath this function is a method to Backup and Restore a complete programmed configuration. Enter '9' and then the access code (*42552) to enable this function.
Restore	See Reset to System Defaults.
RS-485	Port 2 or 3 can be used as either a RS-232 or RS-485 connection. If RS-485 is enabled, then the 6-position connector on the top-back of the large processor board (location J17) is used for communication. **Note:** Do not connect to both the RS-232 and the RS-485.
RS-485 Off Delay	Specifies in milliseconds that amount of time the EliteIQ waits after sending the last character of a transmission until it turns off the RS-485 transceiver (goes to the tri-state condition).
RS-485 On Delay	Specifies in milliseconds that amount of time the Elite waits after turning the RS-485 transceiver on before it transmits the first character of a transmission.
RUN Mode	In this mode, the EliteIQ is monitoring all inputs and performing all alarm functions. **Note:** This mode must be entered after making programming changes for those changes to be saved permanently.

Item	Description
Scale Input	This allows for scaling or adjusting the signal reading to match the sensor settings. Example 1: Sensor is 4-20 mA with a range of 0 to 100.0. Decimal Position = 1 Zero (4 mA reading) = 0 Full Scale (20 mA reading) = 1000 (with 1 digit to the right of the decimal) Example 2: Input is Modbus Holding Register with 16-bits, range is 0 to 65535. The value needs to be scaled to 400 to 20000. Decimal Position = 0 Zero = 400 Full Scale = 20000 Minimum Counts = 0 Maximum Counts = 65535
Scaling Value	This value is multiplied by the number of counts to compute the value that is compared to the Totalizer Limit. This is typically used for counters, where each count represents a larger increment. For example, 1 count may represent 100 gallons, so the Scaling Value would be set to 100.
Scan Rate	The EliteIQ reads all Modbus Slave devices every 'scan rate' seconds.
Scrl	Pressing the SCRL key cycles the display through all enabled channels.
Serial Port	The EliteIQ has three serial ports, Port 1, Port 2 and Port 3. Port 1 is reserved for the LTE cellular modem. Ports 2 and 3 are on DB9 connectors if using RS-232 or a 6-pin connector if using RS-485. The RS-232 port is a 9-pin connector located on the back of the large processor board. It can be used to communicate with Modbus Slave or Master devices via direct connection.
Sign	To switch between (+) and (-) when setting numeric values, press the '*' key twice.
Slot Number	I/O in the EliteIQ are referenced by Slot Number. Each slot contains up to eight channels. Physical slots are numbered 1 through 6. Modbus slots are numbered 1 through 9.
Start Time	Enter a start hour and minute. The Start Hour must be in 24-hour format.

Item	Description
Status Only	Analog and digital channel is scanned but not evaluated for alarms. Relay channel is active. Generally used to view values on the display or when values are passed to a Modbus Master and not for call out.
System Delays	There are 2 System Delays, as follows: **Program to Run Mode Delay** Specify the amount of time that must elapse before the EliteIQ automatically goes from PROGramming mode to RUN mode if the system is inadvertently left in the PROGramming mode. **Disarm to Arm Delay** Specify the amount of time that must elapse before the system goes from Disarm to Arm status.
System Fault Channel	Channel 07 – provides a single fault if any enabled analog input channel falls below a predefined low limit. This is generally used to detect open loops. A value must be specified for the Open Loop Limit in the Options>Analog Input section.
System Identification	Alphanumeric ID – a 20-character name to identify the EliteIQ.
Temperature Channel	Channel 04 – monitors the temperature inside the EliteIQ enclosure. Low and High alarm limits can be specified for alarm relay activation or call outs or disabled.
Totalizer Limit	The totalizer is the total number of times that an input has been in the Non-Normal condition from the last time that it was reset. The alarm associated with the totalizer is the Totalizer Limit, which is specified in counts from 0 (disabled) to 999,999,999. Whenever the channel goes to the Non-Normal state, the totalizer counter is incremented. When the totalizer reaches the Totalizer Limit value, an alarm is generated. The totalizer continues to be incremented until it is reset. It is reset automatically when the Limit Reset Period expires. For example, you are monitoring a chlorine delivery system that puts out a pulse every time it delivers a predefined amount of chlorine into a stream. You want to be notified anytime more than 500 dispenses are made in any 12-hour period. Specify the Totalizer Limit to be 500 and the Limit Reset Period to be 720 minutes.
Write Holding	Allows sending a manually entered analog value to a Modbus Holding register.
Yellow LED	Indicates the channel has a Low alarm. If blinking, the alarm is not acknowledged. If solid, the alarm is acknowledged. (Available on EliteIQ Controllers only).

Item	Description
Zero Scale	The scaling value in engineering units that corresponds to the lowest analog reading. This value can be positive (+) or negative (-). When entering this value, pressing the '*' key twice toggles between (+) and (-). For example, for a 4-20 mA signal that goes from 20.0 to 200.0, the Zero Scale is the value at 4 mA. It is entered as 200 with the Decimal Position set to 1.

Relay Channels

Channel Number		11 – 98
Pulse Duration (0)		Seconds
Channel Mode (2)		0 – disable, 1 – status only (enabled)
Channel Name (4)		

Relay Lists

Relay List Number		01 - 98
Position 1 Relay Channel (1)		11 – 98
Position 2 Relay Channel (2)		
Position 3 Relay Channel (3)		
Position 4 Relay Channel (4)		
Position 5 Relay Channel (5)		
Position 6 Relay Channel (6)		
Position 7 Relay Channel (7)		
Position 8 Relay Channel (8)		
Position 9 Relay Channel (9)		

9 Technical Support

For remote and communication control systems support, parts and repair, or technical support, visit us online at: www.cattron.com/contact.

This product was formerly produced by Antx, Inc.

Due to continuous product improvement, the information provided in this document is subject to change without notice.

Cattron Support
For remote and communication control systems support, parts and repair, or technical support, visit us online at:
www.cattron.com/contact

Cattron North America Inc., 655 N River Rd NW, Suite A, Warren, OH 44483

9M02-7100-A001-EN
Version B