Relay™
User Manual

OM-20000161 Rev 3 October 2016

Relay User Manual

Revision Level: 3
Publication Number: OM-20000161
Revision Date: October 2016
Firmware Version: 6.710 (OEM060710RN0000)

Warranty

NovAtel® Inc. warrants that its GNSS products are free from defects in materials and workmanship, subject to the conditions set forth on our web site: www.novatel.com/products/warranty/.

Relay Module	One (1) Year
Cables and Accessories	Ninety (90) Days
Software Warranty	One (1) Year

Return Instructions

To return products, refer to the instructions found under the Return Policy tab on the Warranty page: www.novatel.com/products/warranty/.

Proprietary Notice

Information in this document is subject to change without notice and does not represent a commitment on the part of NovAtel Inc. The software described in this document is furnished under a license agreement or non-disclosure agreement. The software may be used or copied only in accordance with the terms of the agreement. It is against the law to copy the software on any medium except as specifically allowed in the license or non-disclosure agreement.

The information contained within this manual is believed to be true and correct at the time of publication.

NovAtel, NovAtel Connect and OEM6 are registered trademarks of NovAtel Inc.

Relay and SMART6-L are trademarks of NovAtel Inc.

Manufactured and protected under U.S. Patent:

#5,390,207	#6,184,822 B1	#6,664,923 B1
#5,495,499	#6,211,821 B1	#6,922,167 B2
#5,734,674	#6,445,354 B1	#7,250,916
#5,809,064	#6,608,998 B1	#7,738,536 B2
#5,414,729	#6,452,560 B2	#7,738,606 B2
#5,736,961	#6,728,637 B2	#7,885,317 B2
#6,243,409 B1		

© Copyright 2016 NovAtel Inc. All rights reserved. Unpublished rights reserved under International copyright laws.

Table of Contents

Notices 7

Customer Service 14

1 Introduction 15

1.1 Features and Models 16
1.2 Overview—Relay Hardware 17

2 Installation and Setup 18

2.1 Additional Equipment Required (user supplied) 18
2.2 Relay Setup 18
2.3 Connect the SMART6-L to the Relay 20
2.4 Mount the Relay 21
2.4.1 Mount the Relay Using the Integrated Magnets 22
2.4.2 Mount the Relay Using Screws 22
2.4.3 Optional Mounting Plate 23
2.4.4 Optional Pole Mounting Plate 24
2.5 Connect the NovAtel Relay Interface Cable (01019382) 26
2.6 Connect the Radio Antenna 26
2.6.1 Connect an Enclosure Mounted Antenna 26
2.6.2 Connect a Separately Mounted Antenna 28
2.7 Connect Power 28
2.7.1 Power Supply Requirements 28
2.7.2 Connect Power to the Relay 28
2.8 Connect the Data Communication Equipment 28
2.9 Additional Features and Information 29
2.9.1 Status Indicators 29
2.9.2 Mark Input (MKI) Strobe 29
2.9.3 Pulse Per Second (PPS) Strobe 29
2.9.4 Emulated Radar 30
2.9.5 Controller Area Network (CAN) 30

3 Operation 31

3.1 Communications with the Relay 31
3.1.1 Serial Port Default Settings 31
3.1.2 Communicating Using a Remote Terminal 31
3.1.3 Communicating Using a Computer 31
3.2 Enable the Radio Connection 32
3.2.1 CDMA Cellular Radio Activation and Configuration 32
3.2.2 GSM/HSPA Cellular Radio Activation and Configuration 33
3.2.3 400 MHz UHF Radio Configuration 34
3.2.4 900 MHz UHF Radio Configuration 34
3.2.5 Configure a Rover to Receive Corrections – 400 MHz UHF 35
3.2.6 Configure a Rover to Receive Corrections – 900 MHz UHF 35
3.3 NTRIP Configuration 36

4 Operation—Web User Interface 38

4.1 Configuring the Wi-Fi 38
4.1.1 Wi-Fi Access Point Setup (UHF radio models only) 38
4.1.2 Accessing the Relay Wi-Fi AP 39
4.2 Logging in to the Web UI 39
4.3 Web UI Overview 40
4.3.1 Status Pages 41
4.3.2 Configuration Pages 42
4.3.3 Tools Page 43
4.4 Configuring the Relay 44
4.4.1 Configure the Base Station Position—Overview 44

4.4.2 Configure the GNSS Parameters 49
4.4.3 Configure the Radio Parameters 52
4.4.4 Change the Password 55
4.4.5 Reset the Web UI Password 56
4.5 Logging out 56

5 Updating Relay Product Firmware 57

5.1 Using the WinLoad Utility 57
5.1.1 Open a File to Download 57
5.1.2 Communications Settings 57
5.1.3 Downloading Firmware 58
5.2 Updating Using ESoftLoad Commands 58
5.2.1 ESoftLoad Commands and Logs 58
5.2.2 Working With S-Records 58
5.2.3 Sending Firmware Data 59
5.2.4 SoftLoad Update Method 60
5.2.5 ESoftLoad Logs 62
5.2.6 ESoftLoad Errors 62

A Technical Specifications 63

A.1 Relay Specifications 63
A.1.1 Relay Radio Specification 66
A.2 NovAtel Relay Interface Cable (01019382) 67
A.2.1 Relay Connector and Cable Requirements 69
A.3 Relay NMO to TNC Adapter Cable (01019372) 71

B Commands 72

B.1 Syntax Conventions 73
B.2 CELLULARACTIVATE 74
B.3 EPERSONALITY 75
B.4 ESOFTLOADCOMMIT 77
B.5 ESOFTLOADDATA 78
B.6 ESOFTLOADRESET 79
B.7 ESOFTLOADSREC 80
B.8 M3TRCONFIG 81
B.9 M3TRMODE 83
B.10 MM2TCONFIG 84
B.11 MM2TMODE 87
B.12 WIFIAPCONFIG 88
B.13 WIFIAPCONTROL 90
B.14 WIFICONFIG 91

C Logs 93

C.1 CELLULARACTIVATESTATUS 94
C.2 ESOFTLOADSTATUS 95
C.3 M3TRINFO 97
C.4 MM2TINFO 99
C.5 NTRIPSTATUS 101
C.6 VERSION 103

D Replacement Parts
106

D.1 Relay 106
D.2 User Manuals 106

Figures

1 Relay with SMART6-L 15
2 Relay Front Connector 17
3 Relay Back Connectors 17
4 Simplified Relay Setup 19
5 Connect to Relay 20
6 Align SMART6-L with Relay 20
7 SMART6-L Mounting Holes 21
8 Relay Orientation 21
9 Relay Mounting Holes 22
10 Relay Surface Mounting Plate (NovAtel Part #: 70023098) 23
11 Screws to Remove for the Pole Mounting Plate 24
12 Relay Pole Mounting Plate (NovAtel Part #: 70023100) 25
13 Radio Antenna Installation and Mounting 27
14 SIM Card Installation 33
15 NTRIP System 36
16 Main Page 40
17 Main Page—Wide 40
18 WinLoad Open Window 57
19 Open File in WinLoad 57
20 Relay Dimensions 65
21 NovAtel Relay Interface Cable (01019382) 67
22 Relay NMO to TNC Adapter Cable 71

Tables

1 Relay Models 16
2 Relay Connectors 17
3 Relay Connector Pin-Out 26
4 Relay LED Status Indicators with SMART6-L 29
5 Function Bar Status 41
6 Tool Tab Definitions 43
7 NovAtel Relay Interface Cable Pin-Outs 68
8 Relay Mating Connectors 69
9 Recommended Fuse and Fuse Holders 70
10 Relay Commands 72
11 Supported Operators 74
12 Trait Values 75
13 M3TRCONFIG Parameters 82
14 Compatibility Mode 82
15 Error Check Mode 82
16 Satel M3-TR3 Modes 83
17 MM2TCONFIG Parameters 85
18 Transmit Power 86
19 Modem Mode 86
20 MM2-T Modes 87
21 WifiApId 88
22 WIFIAPConfiguration 89
23 Wi-Fi Configuration 92
24 Parameter1 Values (ASCII only) 92
25 Parameter2 Values (ASCII only) 92
26 Relay Logs 93
27 ESoftLoad Statuses 95
28 M3TRINFO Fields 98
29 Compatibility Mode 98
30 COM Port Identifiers 101
31 NTRIP Status 102
32 Supported Relay Components 105
33 WWW_CONTENT version information 105
34 REGULATORY version information 105
35 Relay Products 106
36 Reference User Manuals 106

Notices

General Notices

The following notices apply to the Relay.

Changes or modifications to this equipment not expressly approved by NovAtel Inc. could result in violation of FCC, Industry Canada and CE Marking rules and void the user's authority to operate this equipment.

Relay products are available in several different radio configurations.

Regulations for legal operation of these radio devices vary by country and the applicable local frequency management authorities. They may operate either on license free channels or on channels where the operation requires a license. Radio transceiver modules shall only be operated at frequencies allocated by local authorities, and without exceeding the given maximum allowed output power ratings. Refer to the radio specific notices later in this section for additional guidance.

Relay equipment should be installed under the guidance of experienced, qualified professionals to ensure that applicable licensing considerations are properly addressed, and that operation of the installed system configuration, (including selected antennas), will be compliant with local regulatory and safety requirements. It remains the installer's responsibility to ensure that an installation operates within EIRP emission limits, and that appropriate separation distances for personal safety are maintained.

Users of UHF 400 MHz radio transceiver modules in North America should be aware, that due to the allocation of the frequency band 406.0 – 406.1 MHz for government use only, the use of radio transceiver module on this frequency band without a proper permit is strictly forbidden.

Export Restrictions

Relay UHF radio variants may be subject to control by the Export Administration Regulations (EAR) and/or the International Traffic in Arms Regulations (ITAR). Export, re-export, or transfer of these products without required authorization from the U.S. Department of Commerce, Bureau of Industry and Security, or the U.S. Department of State, Directorate of Defense Trade Controls, as applicable, is prohibited. Any party exporting, re-exporting, or transferring these products is responsible for obtaining all necessary U.S. government authorizations required to ensure compliance with these and other applicable U.S. laws. Consult with your legal counsel for further guidance.

FCC Notices

This device complies with part 15 of the FCC Rules. Operation is subject to the following two conditions: (1) this device may not cause harmful interference, and (2) this device must accept any interference received, including interference that may cause undesired operation.

Relay has been tested and found to comply with the emission limits for a Class B digital device, pursuant to part 15 of the FCC Rules. The Class B limits are designed to provide reasonable protection against harmful interference in a residential installation.

This equipment generates, uses, and can radiate radio frequency energy and, if not installed and used in accordance with the instructions, may cause harmful interference to radio communications. However, there is no guarantee that interference will not occur in a particular installation. If this equipment does cause harmful interference to radio or television reception, which can be determined by turning the equipment off and on, the user is encouraged to try to correct the interference by one or more of the following measures:

- Re-orient or relocate the Relay or receiving antenna
- Increase the separation between the equipment and the Relay
- Connect the equipment to an outlet on a circuit different from that to which the Relay is connected
- Consult the dealer or an experienced radio/TV technician for help

Changes or modifications not expressly approved by the party responsible for compliance could void the user's authority to operate the equipment.

To maintain compliance with the limits of a Class B digital device, you must use properly shielded interface cables (such as Belden #9539 or equivalent) when using the serial data ports, and double-shielded cables (such as Belden #9945 or equivalent) when using the I/O strobe port.

A twisted pair cable should be used for the CAN port (shielded twisted pair will improve CAN performance in electrically harsh environments). I/O signals should be referred to signal ground (connector pin 5) and not power ground (connector pin 9). If I/O signals route to different areas of the vehicle, dedicated signal grounds for I/O should be spliced into a common connection to connector pin 5 at a point close to the Relay.

Industry Canada

Relay Class B digital apparatus complies with Canadian ICES-003.

Relay appareil numérique de la classe B est conforme à la norme NMB-003 du Canada.

This device complies with Industry Canada's license-exempt RSS-GEN and RSS-210. Operation is subject to the following two conditions:

(1) This device may not cause interference; and

(2) This device must accept any interference, including interference that may cause undesired operation of the device.

CE Marking

Relay-400

Hereby, NovAtel Inc. declares that Relay-400 radio transceiver is in compliance with the essential requirements (radio performance, electromagnetic compatibility and electrical safety) and other relevant provisions of Directive 1999/5/EC, EMC Directive 2004/108/EC, and the RoHS Directive 2011/65/EU. Therefore the equipment is labeled with the following CE-marking. The notification sign informs users that the operating frequency range of the device is not harmonized throughout the market area, and the local spectrum authority should be contacted before the usage of the radio module.

CE1987 ⓘ

CE1588

Relay-GSM

NovAtel Inc. declares that RELAY-GSM radio transceiver is in compliance with the essential requirements (radio performance, electromagnetic compatibility and electrical safety) and other relevant provisions of Directive 1999/5/EC, EMC Directive 2004/108/EC, and the RoHS Directive 2011/65/EU. Therefore the equipment is labeled with the following CE-marking.

CE1909

CE1588

The Declaration of Conformity may be obtained from NovAtel Inc., 1120-68th Ave N.E., Calgary, Alberta, Canada. T2E-8S5.

E-mark

The Relay has been granted EC type approval of an electric/electronic subassembly with respect to electromagnetic compatibility ECE Regulation 10.04. Therefore, the equipment is labeled with the following approval marks.

E11 10 R - 04 8643

Safety

Switch OFF your Relay when around gasoline or diesel-fuel pumps and before filling your vehicle with fuel. Respect restrictions on the use of radio equipment in fuel depots, chemical plants or where blasting operations are in progress.

There may be a hazard associated with the operation of your Relay close to inadequately protected personal medical devices such as hearing aids and pacemakers. Consult the manufacturers of the medical device to determine if it is adequately protected.

Operation of your Relay close to other electronic equipment may also cause interference if the equipment is inadequately protected. Observe any warning signs and manufacturers' recommendations.

RF Exposure
Maximum permissible antenna gains and minimum permissible separation distances between antennas and all persons will vary by radio variant, and must be addressed on a radio specific basis to ensure compliance with FCC, IC, and other applicable RF exposure compliance requirements. Devices must not be co-located or operating in conjunction with any other antenna or transmitter. Refer to the radio specific notices for additional guidance.

Cellular Radios

GSM/HSPA Radios

Relays with GSM/HSPA contain a cellular radio with the following modular approvals:

- FCC ID: RI7HE910
- IC: 5131A-HE910

RF Exposure
The maximum antenna gain including cable loss for compliance with radiated power limits, RF exposure requirements and the categorical exclusion requirements of 2.1091 is 5.22 dBi for 850MHz bands, 3.31 dBi for 1900 MHz bands and 6.45 dBi for 1700 MHz band. The antenna(s) used for this transmitter must be installed to provide a separation distance of at least 20 cm from all persons and must not be co-located or operated in conjunction with any antenna or transmitter not described under this FCC id, except in accordance with FCC multi-transmitter product procedures. Professional installation is required.

CDMA Radios

CDMA Relay variants contain a cellular radio with the following modular approvals:

- FCC ID: RI7DE910-DUAL
- IC: 5131A-DE910DUAL

RF Exposure
The maximum antenna gain including cable loss for compliance with radiated power limits, RF exposure requirements and the categorical exclusion requirements of 2.1091 is 5.12 dBi for part 22H and 6.12 dBi for part 24E. The antenna(s) used for this transmitter must be installed to provide a separation distance of at least 20 cm from all persons and must not transmit simultaneously with any other antenna or transmitter. Professional installation is required.

UHF Radios

400 MHz Radios

400 MHz UHF Relays variants contain a radio transceiver module with the following modular approvals:

- FCC ID: MRBSATEL-TA23
- IC: 2422A-SATELTA23

The radio transceiver module has been designed to operate on 403-473 MHz, the exact use of which differs from one region and/or country to another. The user of a radio transceiver module must take care that the said device is not operated without the permission of the local authorities on frequencies other than those specifically reserved and intended for use without a specific permit.

The radio transceiver is allowed to be used in the following countries, either on license free channels or on channels where the operation requires a license. More detailed information is available at the local frequency management authority.

- Countries: AT, BE, BG, CA, CH, CY, CZ, DE, DK, EE, ES, FI, FR, GB, GR, HU, IE, IS, IT, LT, LU, LV, MT, NL, NO, PL, PT, RU, RO, SE, SI, SK, US

Restricted Use
Users of UHF 400 MHz radio transceiver modules in North America should be aware, that due to the allocation of the frequency band 406.0 – 406.1 MHz for government use only, the use of radio transceiver module on this frequency band without a proper permit is strictly forbidden.

RF Exposure
To comply with FCC and IC RF exposure compliance requirements, maximum antenna gain is 14 dBi and separation distance of at least 1 meter must be maintained between the antenna of this device and all persons, (when Relay 400 MHz is used in a transmitter/base station configuration). Professional installation is required, and radio power must be adjusted by the installer, based on the antenna system gain, so as not to exceed FCC prescribed output power limits.
This device must not be co-located or operating in conjunction with any other antenna or transmitter. Installers shall ensure that the device is not configured as a transmitter/base station when installed on a rover, and personal separation distances of only 20 cm may be expected.

900 MHz Radios

900 MHz UHF Relays variants contain a radio transceiver module with the following module approvals:

- FCC ID: KNYAMM0921TT
- IC: 2329B-AMM0921TT

The radio transmitter IC: 2329B-AMM-0921TT has been approved by Industry Canada to operate with antennas having maximum permissible gain as indicated below. Antennas having a gain greater than the maximum gain indicated for that type are strictly prohibited for use with this device.

RF Exposure
Antennas used with the RELAY UHF 900 MHz variant must have the following characteristics to remain in compliance with FCC requirements and regulations; Antenna gain does not exceed 12 dBi for Yagi antennas and 8.15 dBi for Omni antennas, and, Overall system Equivalent Isotropically Radiated Power (EIRP) does not exceed 36 dBm. Professional installation is required, and radio power must be adjusted by the installer, based on the antenna system gain, so as not to exceed FCC prescribed output power limits. The antenna(s) used for this transmitter must be installed to provide a separation distance of at least 23 cm from all persons and must not be collocated or operating in conjunction with any other antenna or transmitter.

Wi-Fi

Relay models containing UHF radios may contain Wi-Fi wireless technology (802.11 b/g/n).

Relay contains a Wi-Fi radio having an internal antenna with the following modular approvals:

- FCC ID: TFB-TIWI1-01
- IC: 5969A-TIWI101

WEEE Notice

If you purchased your Relay product in Europe, please return it to your dealer or supplier at the end of its life. The objectives of the European Community's environment policy are, in particular, to preserve, protect and improve the quality of the environment, protect human health and utilize natural resources prudently and rationally. Sustainable development advocates the reduction of wasteful consumption of natural resources and the prevention of pollution. Waste electrical and electronic equipment (WEEE) is a regulated area. Where the generation of waste cannot be avoided, it should be reused or recovered for its material or energy. WEEE products may be recognized by their wheeled bin label ( ).[1]

REACH

NovAtel strives to comply with the EU Directive EC 1907/2006 on chemicals and their safe use as per the Registration, Evaluation, Authorization and Restriction of Chemical substances (REACH) for its products, including the Relay product. Since REACH SVHC lists are updated occasionally, please contact NovAtel Customer Support if you require further information.

Cables may contain DEHP (CAS Number 117-81-7) in concentrations above 0.1% w/w.

RoHS

Relay is compliant with the European Union (EU) Restriction of Hazardous Substances (RoHS) Directive 2011/65/EU.

1. Visit the NovAtel Web site at www.novatel.com/products/compliance/environmental-compliance/ for more information.

Conventions

Conventions used in this manual are the following:

Note that provides information to supplement or clarify the accompanying text.

Caution that a certain action, operation or configuration may result in incorrect or improper use of the product.

Warning that a certain action, operation or configuration may result in regulatory noncompliance, safety issues or equipment damage.

- The letter H in the *Offset* columns of the commands and logs tables represents the header length for that command or log. Refer to the OEM6 Family Firmware Reference Manual for ASCII and binary header details.
- The number following 0x is a hexadecimal number.
- Command descriptions' brackets, [ ], represent optional parameters.
- In tables where values are missing they are assumed to be reserved for future use.
- Status words are output as hexadecimal numbers and must be converted to binary format (and in some cases then also to decimal). For an example of this type of conversion, refer to the RANGE log in the OEM6 Family Firmware Reference Manual.
- Conversions and their binary or decimal results are always read from right to left.

Customer Service

NovAtel Knowledge Base

If a technical issue is encountered, browse the NovAtel Web site: www.novatel.com/support/search/. Use the support pages to search for general information about GNSS and other technologies, information about NovAtel hardware and software and installation and operation issues.

Before Contacting Customer Support

Before you contact NovAtel Customer Support about a software problem perform the following steps:

1. Issue the following logging commands to collect data to a file on your computer for 15 minutes:

```
LOG VERSIONA ONCE
LOG RXSTATUSA ONCHANGED
LOG RXCONFIGA ONCE
LOG RAWEPHEMA ONNEW
LOG BESTPOSA ONTIME 1
LOG RANGEA ONTIME 1
LOG GLORAWEPHEMA ONCHANGED[1]
```

2. Send the file containing the logs to NovAtel Customer Service, using either the NovAtel ftp site at ftp://ftp.novatel.com/incoming or the support@novatel.com e-mail address.
3. You can also issue a `FRESET` command to the receiver to clear any unknown settings.

> The `FRESET` command will erase all user settings and perform a factory reset. You should know your configuration and be able to reconfigure the receiver before you send the `FRESET` command.

If you are having a hardware problem, send a list of the troubleshooting steps taken and the results.

Contact Information

Log a support request with NovAtel Customer Support using one of the following methods:

Log a Case and Search Knowledge:

Website: www.novatel.com/support

Log a Case, Search Knowledge and View Your Case History: (login access required)

Web Portal: https://novatelsupport.force.com/community/login

E-mail:

support@novatel.com

Telephone:

U.S. and Canada: 1-800-NOVATEL (1-800-668-2835)

International: +1-403-295-4900

1. For GLONASS channel configuration.

Chapter 1 Introduction

The Relay is a radio telecommunication module that connects directly to a NovAtel SMART6-L dual-frequency GNSS receiver. The Relay provides the SMART6-L with radio connectivity to support RTK or Precise Point Positioning (PPP) corrections.

Depending on the model, the Relay contains one of the following radios:

- CDMA 1xRTT cellular radio
- GSM HSPA cellular radio
- 400 MHz licensed radio
- 900 MHz unlicensed radio

> Only the 400 and 900 MHz radio models have access to Wi-Fi for monitoring and configuring the Relay. Refer to *Section 4.1, Configuring the Wi-Fi* on page 38 for details.

The Relay also features Light Emitting Diodes (LEDs) for status indication.

Figure 1: Relay with SMART6-L

Radio antenna not included

1.1 Features and Models

The main features of the Relay are:

- physical connectivity for a SMART6-L receiver
- radio connectivity for RTK or differential corrections
- Wi-Fi connectivity for monitoring and configuration (UHF radio models only)
- integrated NTRIP client
- magnetic or screw mounting
- three LED status indicators
- water and dust tight enclosure

Table 1: Relay Models

NovAtel Part #	Description
01019343	Relay with GSM HSPA
01019345	Relay with CDMA 1xRTT
01019347	Relay with Satel 400 MHz radio
01019349	Relay with Freewave 900 MHz radio

Contact NovAtel Sales at www.novatel.com/where-to-buy/contact-us for information regarding available models.

The Relay functions only with a SMART6-L running firmware version 6.610.

1.2 Overview—Relay Hardware

The Relay has a port on the front to connect to a SMART6-L and ports on the back to connect to other equipment.

Figure 2: Relay Front Connector

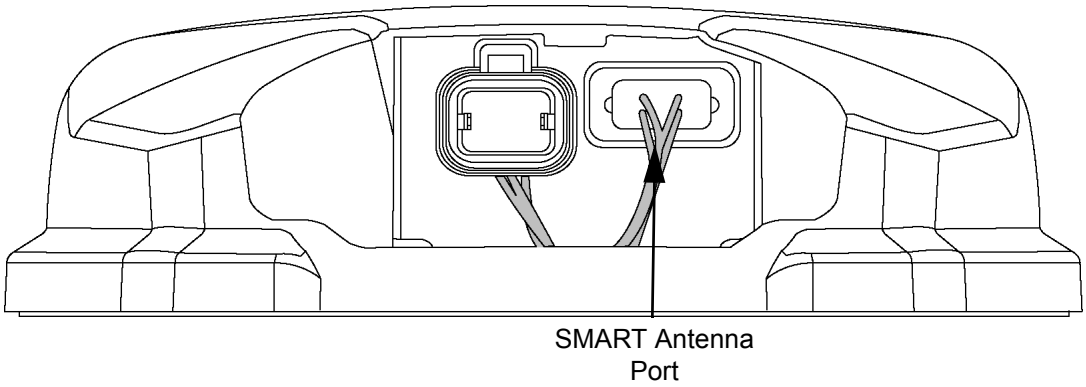

Figure 3: Relay Back Connectors

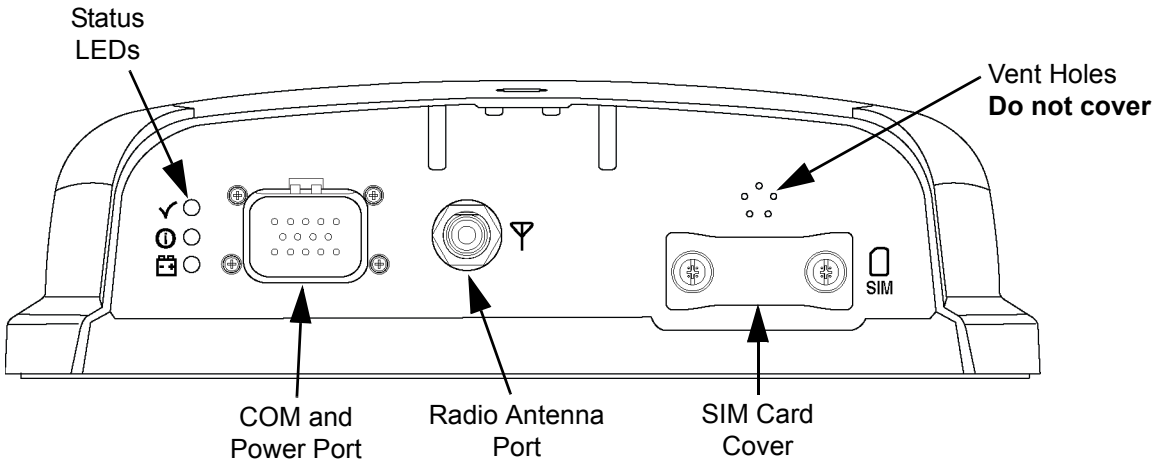

The pressure equalization vent holes (labeled Vent Holes in the diagram above), must never be covered.

Table 2: Relay Connectors

Connector	Description
SMART Antenna Port	14-pin Ampseal connector Connects to the 14-pin connector on the SMART6-L
COM and Power Port	14-pin Ampseal connector Connects to the cable that provides power for the Relay and SMART6-L. Also, provides access to the serial communication ports and the Pulse Per Second (PPS), Emulated Radar, Mark Input and CAN Bus signals
Radio Antenna Port	Connects the radio in the Relay to the external radio antenna

Chapter 2 Installation and Setup

This chapter contains instructions and tips to install the Relay.

2.1 Additional Equipment Required (user supplied)

The following additional equipment is required:

- A NovAtel SMART6-L with compatible firmware
- A cable harness for communicating with and powering the Relay and the SMART6-L (NovAtel Relay interface cable (01019382)) is available with three DB-9 connectors, five bare wire cables and a Relay connector)
- A fused power supply (see *Table 9, Recommended Fuse and Fuse Holders* on page 70 for details)
- A computer with a serial port for configuring the SMART6-L
- A Wi-Fi capable computer or mobile device for monitoring and configuring 400 MHz or 900 MHz radio Relay models only.

> Wi-Fi is only available when a UHF radio model Relay is configured as a Base Station. The Relay is typically shipped configured as a Rover. Refer to *Section 3.2.3, 400 MHz UHF Radio Configuration* on page 34 or *Section 3.2.4, 900 MHz UHF Radio Configuration* on page 34 for instructions on configuring the Relay as a Base Station.

> Installers shall ensure that the device is not configured as a transmitter/base station when installed as a rover, or when personal separation distances of only 20 cm may be expected. Such a configuration will create a human safety hazard, and FCC rules for maximum personal exposure will be violated.

2.2 Relay Setup

Complete the following steps to connect and power the Relay. Also see *Figure 4, Simplified Relay Setup* on page 19.

1. Connect the SMART6-L to the Relay (refer to *Section 2.3, Connect the SMART6-L to the Relay* on page 20 for details).
2. Mount the Relay on a secure, stable structure with an unobstructed view of the sky from horizon to horizon (refer to *Section 2.4, Mount the Relay* on page 21 for details).
3. Connect the NovAtel Relay interface cable (01019382) or custom wiring harness, to the *COM and Power* port on the back of the Relay (refer to *Section 2.5, Connect the NovAtel Relay Interface Cable (01019382)* on page 26 for details).
4. Connect the Relay to the external antenna (refer to *Section 2.6, Connect the Radio Antenna* on page 26 for details).
5. Connect the NovAtel Relay interface cable (01019382) or custom wiring harness to the power supply and turn on the power supply to the Relay (the NovAtel Relay interface cable (01019382) is also a power cable). The power LED on the Relay glows red when the Relay is properly powered.

> Fuse/holder recommendations can be found in *Table 9, Recommended Fuse and Fuse Holders* on page 70.

6. Connect the NovAtel Relay interface cable (01019382) or custom wiring harness to a DB-9 serial port on a computer or other data storage device.

Figure 4: Simplified Relay Setup

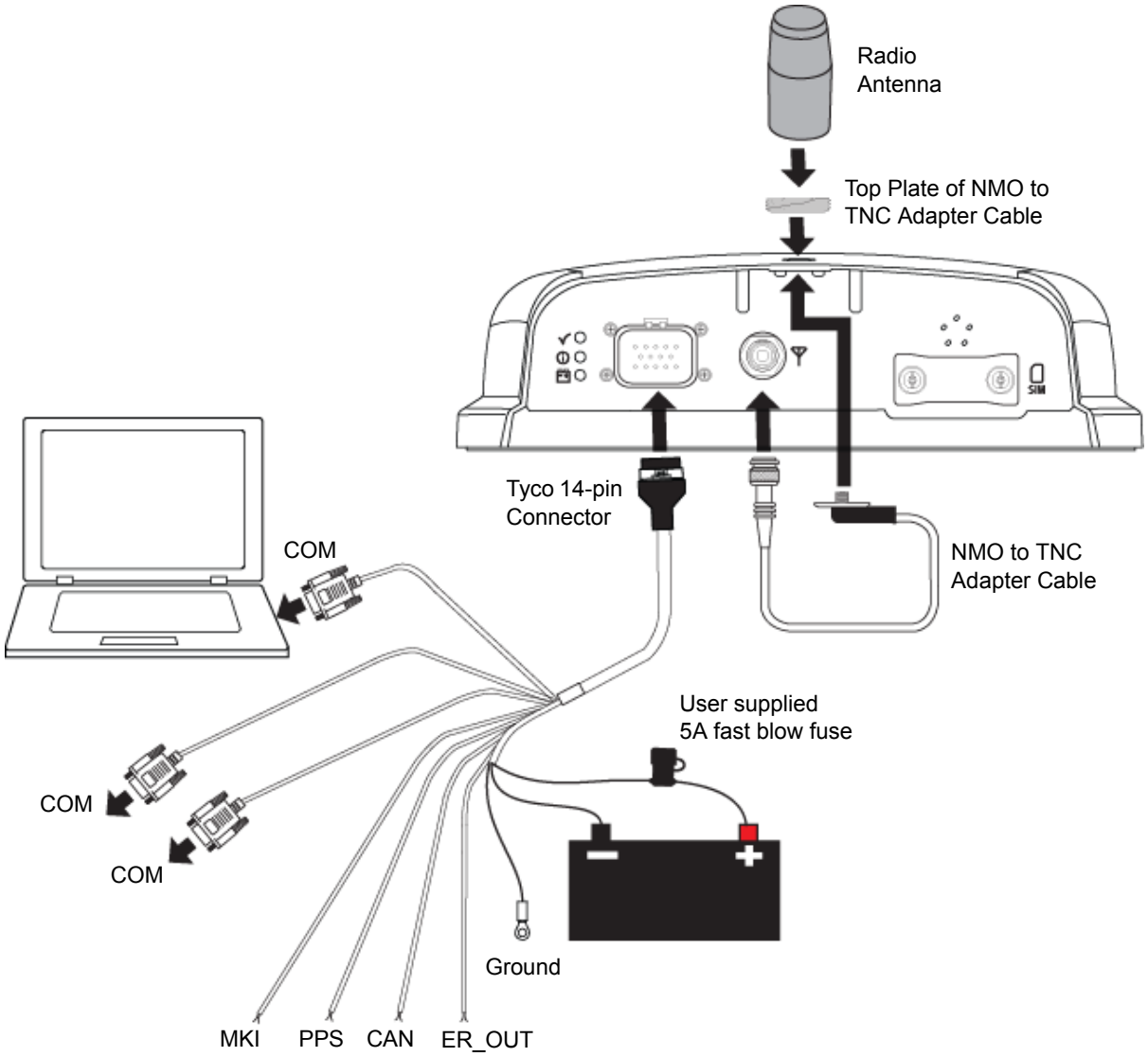

Minimum conductor size for all signal wiring is 0.5 mm/20 AWG. Minimum conductor size for power wiring is 1.25 mm/16 AWG. For user fabricated cables, all wire insulation sizes in the Tyco 14-pin connector must conform to the manufacturer's recommendations for insulation diameter range (or watertight seal integrity will be compromised).

2.3 Connect the SMART6-L to the Relay

Use the following procedure to connect the SMART6-L to the Relay.

1. Connect the SMART6-L to the Relay using the Ampseal connectors. Ensure the connection is fully seated (wait for click).

Figure 5: Connect to Relay

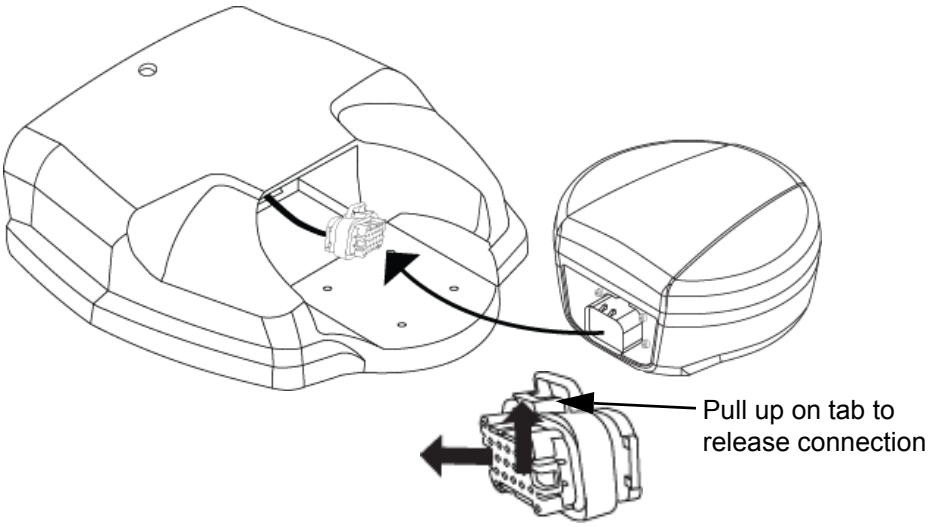

2. Slide the SMART6-L into the Relay, tucking the cable assembly into the Relay cavity.

Figure 6: Align SMART6-L with Relay

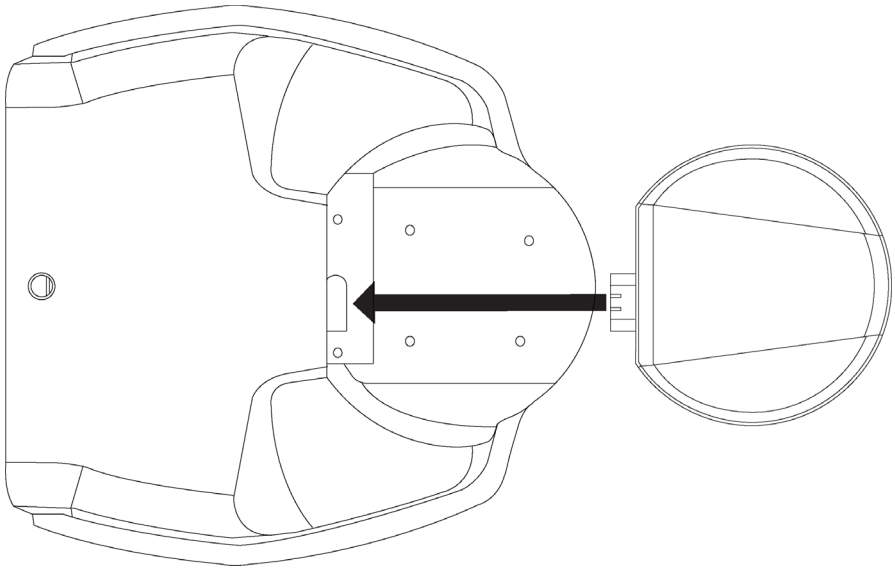

3. Turn the Relay over so the bottom of the Relay is facing up.
4. Use four supplied M4 screws to screw up from the bottom of the Relay into the SMART6-L mounting holes. See *Figure 7, SMART6-L Mounting Holes* on page 21.

> Four appropriately sized M4 screws are included in the Relay box. Torque must not exceed 8 in. lbs. If replacement screws are used, the screws must be 18 mm (M4 X 18) or 20 mm (M4 x 20) long.

Figure 7: SMART6-L Mounting Holes

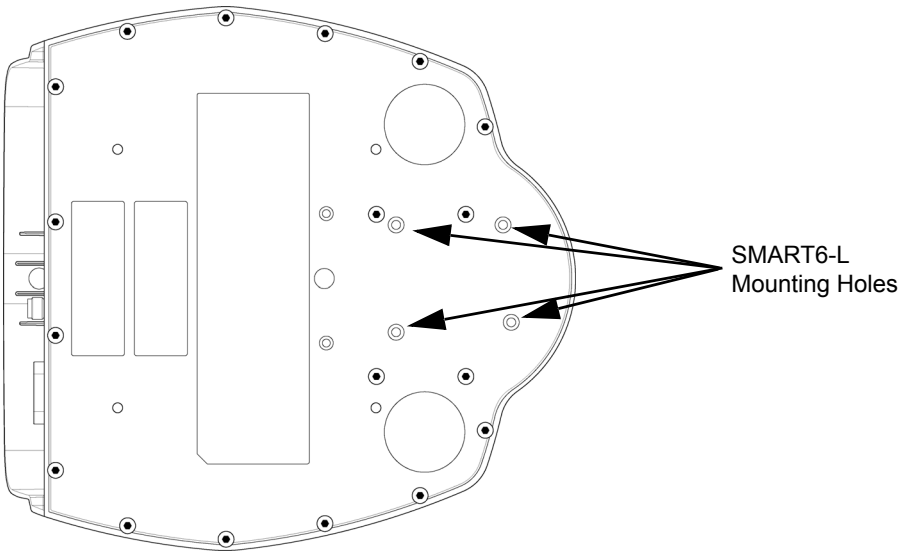

2.4 Mount the Relay

Mount the Relay on a secure, stable structure capable of safe operation in the specific environment.

The Relay can be mounted using screws or magnets.

Vehicle Mounting

If installing on a vehicle, mount the Relay on the vehicle roof, ideally close to the pivot point of the vehicle. The Relay must be mounted with the 14-pin connector and antenna connector facing the rear of the vehicle (see *Figure 8, Relay Orientation*).

Figure 8: Relay Orientation

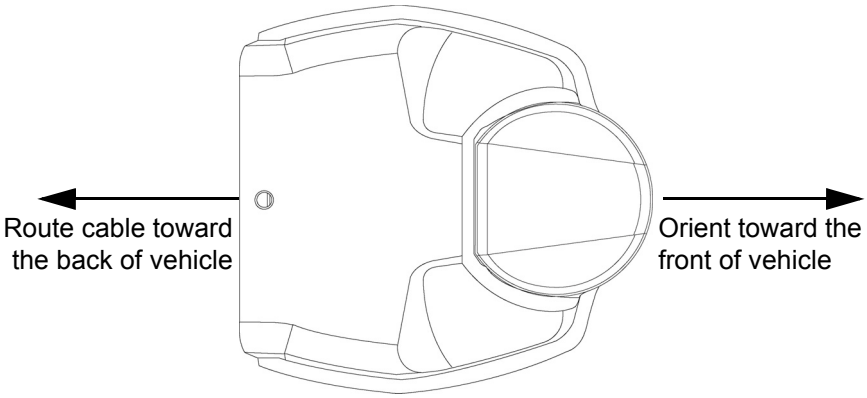

> The Relay must be rigidly secured to the vehicle to avoid errors caused by vibration and motion.

Stationary Mounting

If installing in a stationary location, mount the Relay in a location that has a clear view of the sky so that each satellite above the horizon can be tracked without obstruction. For more information, refer to NovAtel's An Introduction to GNSS.

2.4.1 Mount the Relay Using the Integrated Magnets

The Relay has five rare earth magnets integrated into the bottom of the module. These magnets will securely attach the Relay to any magnetic surface.

> To mount the Relay on a non-magnetic surface, mount the module using screws (see *Section 2.4.2, Mount the Relay Using Screws* on page 22) or use the optional mounting plate (see *Section 2.4.3, Optional Mounting Plate* on page 23).

2.4.2 Mount the Relay Using Screws

The Relay can be mounted using four M4 screws. See *Figure 9, Relay Mounting Holes* for the location of these holes.

> Screws can be used to mount the Relay directly to the roof of the vehicle or to the optional mounting plate (see *Section 2.4.3, Optional Mounting Plate* on page 23).

> The optimal screw penetration into the Relay mounting holes is 6 mm (±1 mm) deep.
>
> When selecting screws for mounting the Relay, make sure the screw penetration does not exceed this specification. Using excessively long screws can damage the Relay enclosure.

Figure 9: Relay Mounting Holes

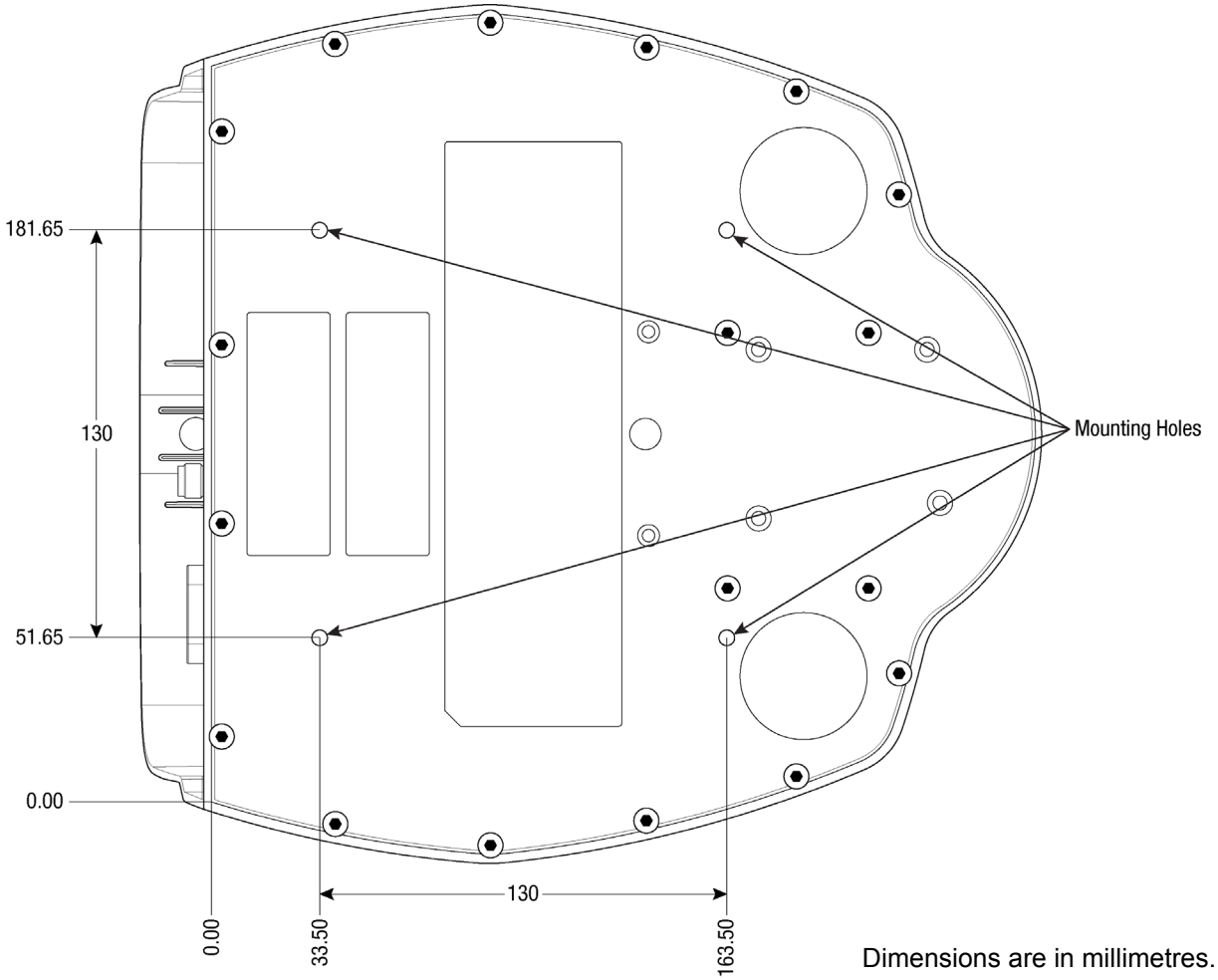

Dimensions are in millimetres.

2.4.3 Optional Mounting Plate

An optional mounting plate is available to facilitate mounting the Relay.

To install the mounting plate, use the mounting holes at each corner of the plate (see *Figure 10, Relay Surface Mounting Plate (NovAtel Part #: 70023098)*.

The mounting plate has two alignment pegs on the top of the plate. These alignment pegs match holes on the bottom of the Relay.

> If attaching the Relay using the integrated magnets, first attach the mounting plate to the vehicle and then attach the Relay to the plate using the magnets.
>
> If attaching the Relay using screws, use the screws to attach the Relay to the mounting plate before attaching the plate to the vehicle.

> When attaching the Relay to the mounting plate using screws, the screws must not exceed 8 mm in length. Using excessively long screws can damage the Relay enclosure. Torque must not exceed 8 in. lbs.

Figure 10: Relay Surface Mounting Plate (NovAtel Part #: 70023098)

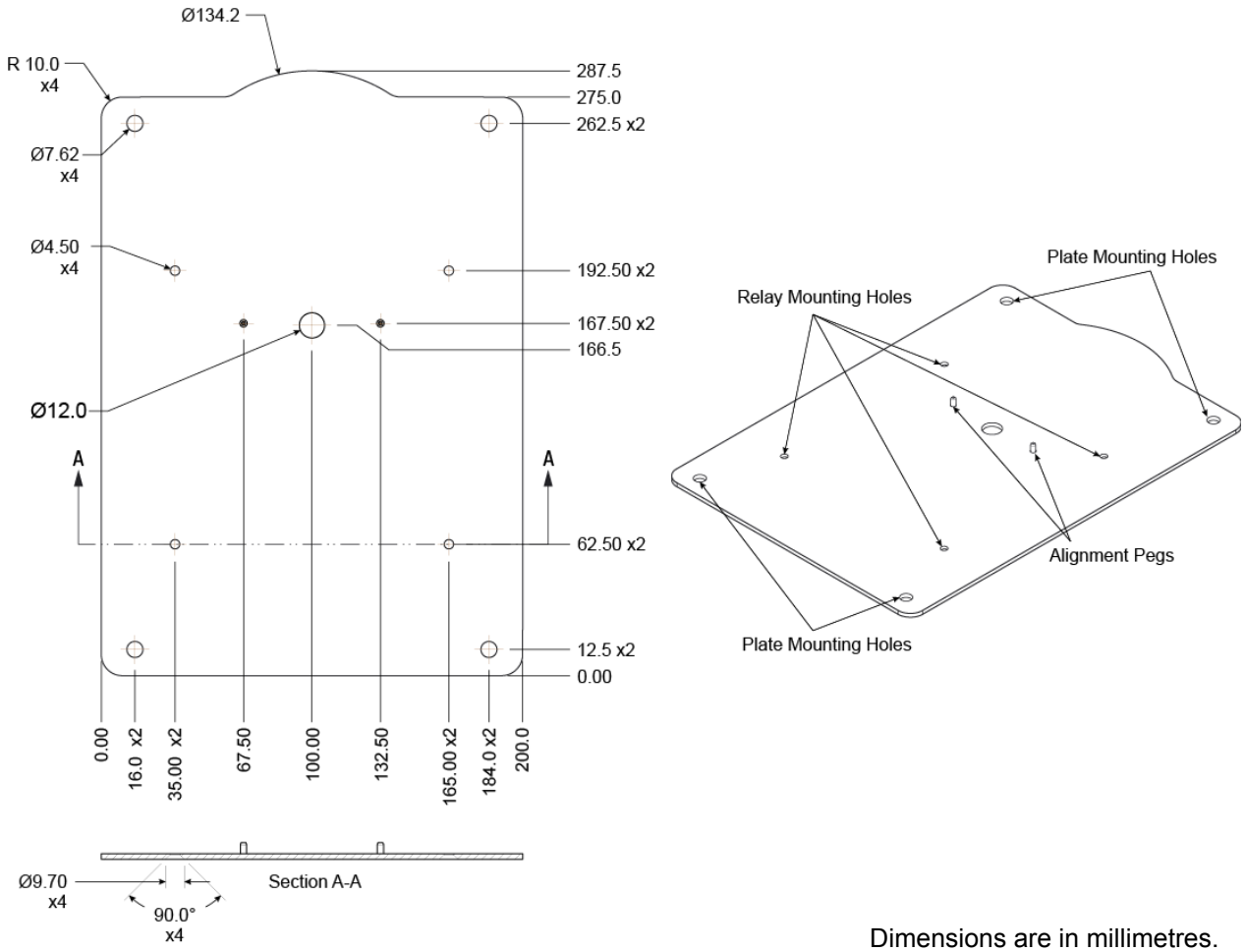

Dimensions are in millimetres.

2.4.4 Optional Pole Mounting Plate

An optional pole mounting plate is available to facilitate mounting the Relay onto a mount such as a range pole, tribrach or tripod using a 5/8”” x 11 UNC thread.

To install the pole mounting plate:

1. Remove two of the screws used to secure the SMART6-L to the Relay. See *Figure 11, Screws to Remove for the Pole Mounting Plate*.

Figure 11: Screws to Remove for the Pole Mounting Plate

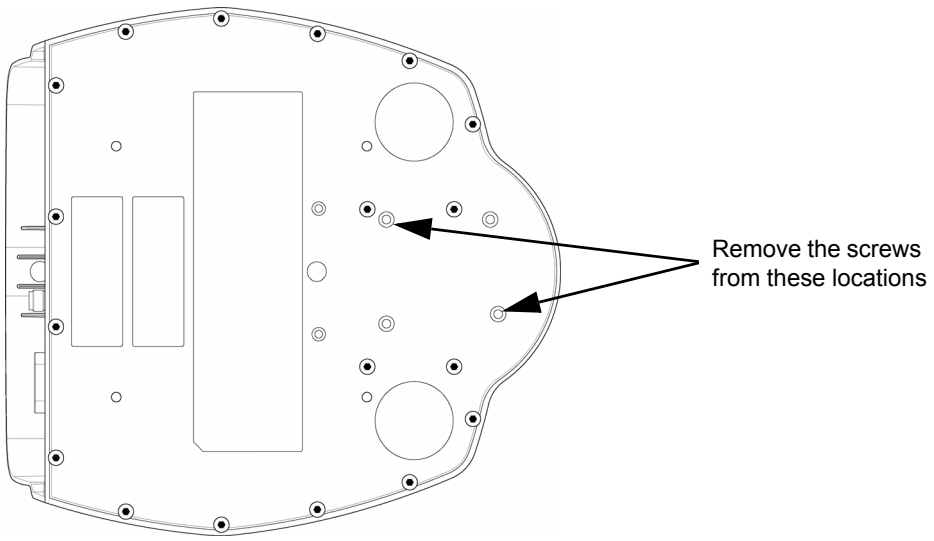

> If you plan to use screws as well as the integrated magnets to mount the Relay to the pole mounting plate, remove all four SMART6-L mounting screws.

2. Align the two holes from which the SMART6-L mounting screws were removed with the two alignment pegs on the top of the pole mounting plate.
3. Set the Relay on the pole mounting plate. The integrated magnets will securely hold the Relay to the pole mounting plate.
   If screws are being used to further secure the Relay, use two M4 x 24 mm screws to secure the SMART6-L and Relay to the pole mounting plate. See *Figure 12, Relay Pole Mounting Plate (NovAtel Part #: 70023100)* on page 25 for the location of the screw holes.

> When attaching the Relay to the pole mounting plate using screws, the screws must not exceed 24 mm in length. Using excessively long screws can damage the SMART6-L enclosure.
>
> Torque must not exceed 8 in. lbs.

4. Screw the pole mounting plate onto the 5/8” x 11 UNC thread mount.

Figure 12: Relay Pole Mounting Plate (NovAtel Part #: 70023100)

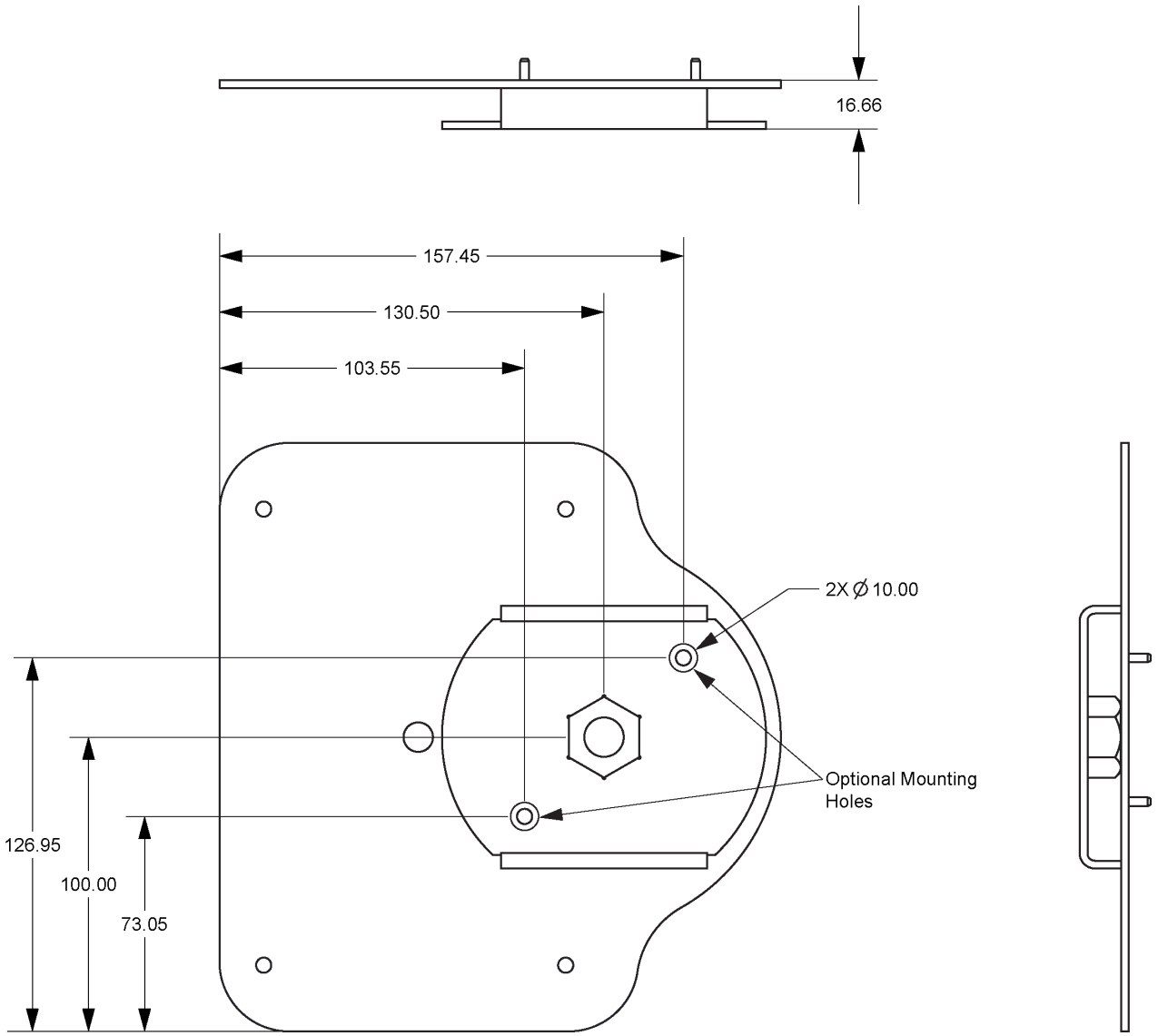

Dimensions are in millimetres.

2.5 Connect the NovAtel Relay Interface Cable (01019382)

All physical connections to the SMART6-L are made using the COM and Power port on the back of the Relay (see *Figure 3, Relay Back Connectors* on page 17). The pin-out for this connector is shown in *Table 3, Relay Connector Pin-Out*.

Table 3: Relay Connector Pin-Out

Pin	Use	Pin	Use
1	COM1 Transmit Data	8	COM3 Transmit Data
2	COM1 Receive Data	9	Power Negative/Return
3	COM2 Transmit Data	10	Emulated Radar Output[a]
4	COM2 Receive Data	11	MKI (Mark Input)
5	Signal Ground (COM/MKI/PPS/ER)	12	PPS (Pulse Per Second) Output
6	CAN+	13	COM3 Receive Data
7	CAN-	14	Power Positive/Source

a. Emulated Radar is available only on SMART6-L hardware versions 3.03 or greater. To determine the hardware version of the SMART6-L, refer to the label on the bottom of the SMART6-L.

To access the power and communication signals, connect the 14-pin connector on the NovAtel Relay interface cable (NovAtel part #: 01019382) to the COM and Power port on the Relay. See *Section A.2, NovAtel Relay Interface Cable (01019382)* on page 67 for more information.

Alternately, a custom interface cable can be used to access the power and communication signals. For information about making a custom interface cable, see *Section A.2.1, Relay Connector and Cable Requirements* on page 69.

2.6 Connect the Radio Antenna

To receive cellular or UHF radio signals, the Relay must be connected to a radio antenna. To connect the radio antenna, the accessory cable may be used to connect the antenna directly to the Relay (refer to *Connect an Enclosure Mounted Antenna* on page 26) or a separate cable and antenna may be used (refer to *Connect a Separately Mounted Antenna* on page 28).

2.6.1 Connect an Enclosure Mounted Antenna

To ensure the overall antenna system gain complies with the radio specific FCC requirements, the TNC Accessory Cable is only used when approved by a professional installer for use in combination with a designated antenna.

Refer to *Cellular Radios* on page 10 for additional guidance.

Mounting the antenna on the Relay enclosure is supported on Rover configurations only.

Do not mount the antenna on a Relay that is acting as a base station.

1. Connect the TNC connector on the radio antenna cable to the Radio Antenna port ( ) on the Relay.

2. Separate the NMO adapter from the NMO to TNC Adapter Cable (NovAtel part #: 01019372. Refer to *A.3, Relay NMO to TNC Adapter Cable (01019372)* on page 71 for details). Ensure the white gasket does not fall out.

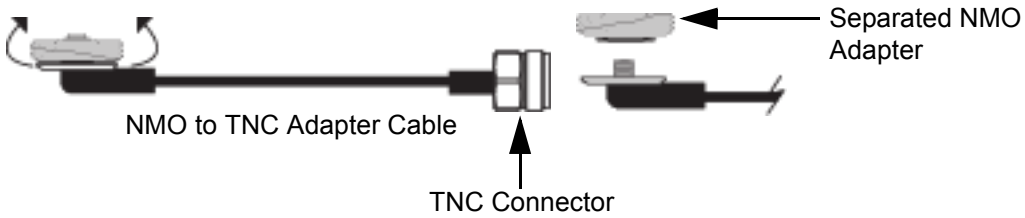

3. Insert the NMO to TNC Adapter cable up and through the Relay radio mounting hole. Ensure the gold portion of the cable is between the two connector guides found under the antenna mounting hole on the Relay.

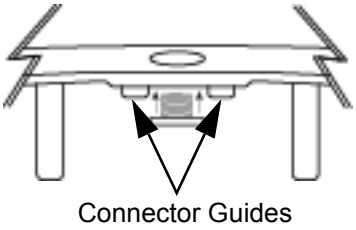

4. Re-secure the NMO adapter to the NMO to TNC Adapter cable from the top of the Relay. Ensure the white gasket is between the plate and the top of the Relay plastic.
5. Screw a radio antenna (NMO style mounting) to the radio adapter plate on the Relay. Hand tighten the radio antenna until it is securely attached to the top of the Relay. Do not over tighten the antenna, as over tightening could damage the Relay or the antenna.

See *Figure 13, Radio Antenna Installation and Mounting* on page 27 and *Figure 4, Simplified Relay Setup* on page 19.

Figure 13: Radio Antenna Installation and Mounting

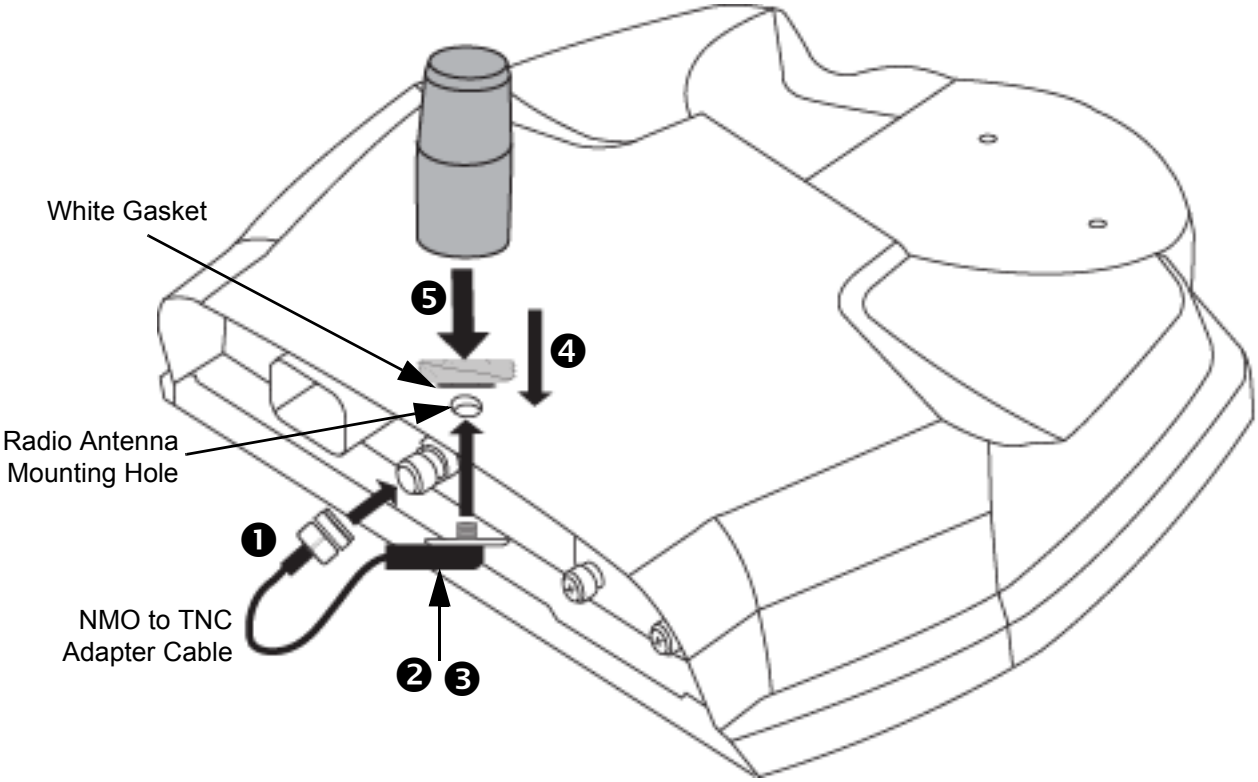

2.6.2 Connect a Separately Mounted Antenna

For base station installations, the radio antenna needs to be mounted separately from the Relay. To connect the antenna in this type of installation:

1. Obtain an antenna cable with a TNC connector on one end and the appropriate connector for the antenna on the other end.
2. Connect the TNC connector of the antenna cable to the Radio Antenna port on the Relay.
3. Connect the other end of the antenna cable to the antenna.

Separation Distance: Maximum permissible antenna gains and minimum permissible separation distances between antennas and all persons will vary by radio variant, and must be addressed on a radio specific basis to ensure compliance with FCC, IC and other applicable RF exposure compliance requirements. Professional installation is required. Devices must not be co-located or operating in conjunction with any other antenna of transmitter. Refer to *Cellular Radios* on page 10 for additional guidance.

2.7 Connect Power

Power is connected to the Relay through the COM and Power port on the back of the Relay. This power connection provides power to both the Relay and the SMART6-L.

2.7.1 Power Supply Requirements

The Relay requires +9 to +36 VDC input power (refer to *Relay Specifications* on page 63 for additional power supply specifications). The power supply connected to the Relay must be capable of providing enough power for both the Relay and the SMART6-L.

The Relay power source must be protected by a 5 A Fast Blow Fuse or damage to wiring may result (not covered by warranty). Refer to *Relay Connector and Cable Requirements* on page 69*)*.

2.7.2 Connect Power to the Relay

1. Connect the positive pole of the power supply or battery (through a 5 A fuse) to pin 14 of the COM and Power port. If using the NovAtel Relay interface cable (01019382), connect (through a 5 A fuse) to the lead labeled *BATT+*.
2. Connect the negative pole of the power supply or battery to pin 9 of the COM and Power port. If using the NovAtel Relay interface cable (01019382), connect to the lead labeled the *BATT-*.
3. If using the NovAtel Relay interface cable (01019382), connect the ground lug on the interface cable to the vehicle ground system.

2.8 Connect the Data Communication Equipment

To communicate with the receiver for sending commands and obtaining logs, a connection to data communications equipment is required.

The COM and Power ports on the Relay provide access to three RS-232 serial communication ports. COM1 and COM2 are used to communicate with the SMART6-L. COM3 is a service port used only to update the Relay firmware. The default baud rate for the Relay service port is 115200.

If using the NovAtel Relay interface cable (01019382), these three ports are available on three DB-9 connectors labeled *COM1*, *COM2* and *COM3*. If using a custom interface cable, refer to *Table 3, Relay Connector Pin-Out* on page 26 for more information.

2.9 Additional Features and Information

This section contains information about the additional features of the Relay, which may affect the overall design of the receiver system.

2.9.1 Status Indicators

LED indicators on the Relay provide the status of the receiver. The table below shows the meaning of the LEDs.

Table 4: Relay LED Status Indicators with SMART6-L

Icon	LED Color	State	Description
	Green	Position Valid	Indicates a valid GNSS position solution is available
	Yellow	Error	The receiver is in the error state and tracking is disabled Possible cause: - a fatal error - an unusual receiver status indicator, setup to act like a fatal error Error status remains until the cause of the error is corrected and the receiver is reset
	Red	Power	Power is on

2.9.2 Mark Input (MKI) Strobe

The MKI strobe is a 5 V logic tolerant input signal used for synchronization. When a pulse greater than 150 ns is detected on this input, the receiver will generate certain logs. See the OEM6 Family Firmware Reference Manual (OM-20000129) for more information.

If using the NovAtel Relay interface cable (01019382), the Mark Input signal is available on the leads labeled *MK1* and *MK1 GND*. If using a custom interface cable, the pin-out information can be found on *Table 3, Relay Connector Pin-Out* on page 26.

2.9.3 Pulse Per Second (PPS) Strobe

The PPS output strobe is a time synchronization signal. This 3.3 V CMOS output strobe is a pulse where the leading edge is synchronized to receiver-calculated GNSS Time. See the OEM6 Family Firmware Reference Manual (OM-20000129) for more information.

If using the NovAtel Relay interface cable (01019382), the PPS output signal is available on the leads labeled *PPS* and *PPS GND*. If using a custom interface cable, the pin-out information can be found on *Table 3, Relay Connector Pin-Out* on page 26.

2.9.4 Emulated Radar

The ER outputs a logic high of supply voltage minus 0.5 V minimum and logic low of 0.5 V maximum with a rise and fall time of less than 1 ms. Its output references signal GND and provides logic low output until its speed is greater than 1 km/Hr. ER can be configured to operate at one of six distinct frequencies (10.06, 16.32, 26.11, 28.12, 34.80 or 36.11 Hz/km/Hr, with 36.11 Hz/km/Hr being the default value) and with an effective range from 1 km/ Hr to 55 km/Hr for near-horizontal applications. See the SMART6-L User Manual (OM-20000146) for more information.

> Emulated Radar is available only on SMART6-L hardware versions 3.03 or greater.
>
> To determine the hardware version of the SMART6-L, refer to the label on the bottom of the SMART6-L.

2.9.5 Controller Area Network (CAN)

The SMART6-L supports the following NMEA2000 Parameter Group Number (PGN) messages:

- PGN 129029 GNSSPositionData (1 Hz)
- PGN 129025 GNSSPositionRapidUpdate (10 Hz)
- PGN 129026 COGandSOGRapidUpdate (10 Hz)

If you are using the NovAtel Relay interface cable (01019382), the CAN signals are available on the leads labeled *CAN+* and *CAN-*. If you are using a custom interface cable, the CAN signals are available on pin 6 and pin 7 of the COM and Power port (see *Table 3, Relay Connector Pin-Out* on page 26).

> The CAN must be activated by entering the `SETCANNAME` command (refer to the SMART6-L User Manual (OM-20000146) for more information). To have the CAN set up automatically at subsequent start ups, also send the `SAVECONFIG` command.

> Details for the PGN messages can be found in the NMEA2000 specification which can be purchased directly from the National Marine Electronics Association (www.nmea.org/).

Chapter 3 Operation

Before operating the Relay for the first time, ensure the installation instructions in *Chapter 2, Installation and Setup* were followed.

This chapter describes the operation of the Relay. It does not describe the operation of the SMART6-L that is connected to the Relay. For information about the operation of the SMART6-L, refer to the SMART6-L User Manual (OM-20000146) available from our website at www.novatel.com/support/info/documents/925.

3.1 Communications with the Relay

Communication with the Relay typically consists of issuing commands or receiving logs through the communication ports from an external serial communications device. This could be either a terminal or computer connected directly to the COM1 or COM2 serial port, available on the COM and Power Port on the back of the Relay. The commands issued to COM1 or COM2 are passed to the SMART6-L where the commands are processed. The SMART6-L then performs the required action on either the receiver or the Relay.

It is recommended that you become thoroughly familiar with the commands and logs detailed in the OEM6 Family Firmware Reference Manual (OM-20000129) to ensure maximum utilization of the receiver's capabilities.

3.1.1 Serial Port Default Settings

The receiver communicates with the computer or terminal via the COM1 and COM2 ports on the Relay. For communication to occur, both the Relay and the operator interface have to be configured properly. The Relay's COM1 andCOM2 default port settings are as follows:

- 9600 bps, no parity, 8 data bits, 1 stop bit, no handshaking, echo off

Changing the default settings requires using the `SERIALCONFIG` command. See for the SMART6-L User Manual (OM-20000146) details.

The data transfer rate chosen determines how fast information is transmitted. For example, outputting a log whose message byte count is 96. The default port settings allows 10 bits/byte (8 data bits + 1 stop bit + 1 framing bit). It therefore takes 960 bits per message. To get 10 messages per second, 9600 bps is required. Also remember that even if the bps is set to 9600, the actual data transfer rate is lower and depends on the number of satellites being tracked, data filters in use and idle time. It is suggested a margin is set when choosing a data rate (115200 is recommended for most applications).

> Although the receiver can operate at data transfer rates as low as 300 bps, this is not desirable. For example, if several data logs are active (that is, a significant amount of information needs to be transmitted every second) but the bit rate is set too low, data will overflow the serial port buffers, causing a warning in the receiver status and loss of data.

3.1.2 Communicating Using a Remote Terminal

One method of communicating with the Relay is through a remote terminal. The Relay is pre-wired to allow proper RS-232 interface with the data terminal. To communicate with the terminal, the Relay only requires the RX, TX and GND lines to be used. Request to Send (RTS)/Clear to Send (CTS) hardware handshaking is not available. Ensure the terminal's communications set up matches the receiver's RS-232 protocol.

3.1.3 Communicating Using a Computer

A computer can be set up to emulate a remote terminal as well as provide the added flexibility of creating multiple command batch files and data logging storage files. Any standard communications software package, that emulates a terminal, can be used to establish bidirectional communications with the Relay. For example, HyperTerminal or NovAtel's Graphical User Interface (GUI) program NovAtel Connect™. All data is sent as raw 8-bit binary or ASCII characters.

3.2 Enable the Radio Connection

The Relay contains one of the following radio modules.

- CDMA cellular radio
- GSM HPSA cellular radio
- 400 MHz radio
- 900 MHz radio

Use one of the following sections to configure the Relay radio.

3.2.1 CDMA Cellular Radio Activation and Configuration

To activate a Relay on a CDMA cellular network, follow these steps:

1. Obtain a Verizon Wireless Account. To make activation easier, we recommend contacting the Data Activation Center at 1-866-966-8881 (toll-free in U.S.) or via e-mail *orders@dataactivationcenter.com* to set up an account or add service to an existing account. Alternatively, you can contact Verizon Wireless directly to set up an account.
   You may need to provide the following information:
   a. CDMA Mobile Equipment Identifier (MEID):
      Modem serial number from Relay product label
   b. Product Name: Relay-CDMA
      [Part Number: 01019344]
   c. Once the modem has been assigned a 10 digit wireless number and data plan, proceed to next step.

2. Ensure a cellular antenna is connected to the Relay, apply power and then establish a serial connection with your product, as outlined in *Section 3.1, Communications with the Relay* on page 31.
3. Log the following:
   `LOG CELLULARSTATUS ONCHANGED` to display the modem and cellular connection status
   `LOG CELLULARACTIVATESTATUS ONCHANGED` to display the activation status
   `LOG CELLULARINFO ONCHANGED` to display modem and network information
4. Issue the following commands:
   `CELLULARCONFIG DATA ON` to enable/disable data connectivity on the configured APN
   `CELLULARCONFIG DATAROAM ON` to enable/disable data connectivity when roaming
   `CELLULARCONFIG POWER ON` to enable the radio
5. Once the cellular status displays as “Full”, issue the following command:
   `CELLULARACTIVATE VERIZON`
6. Once the cellular status reports an IP Address, your product is ready to use.
7. Issue the `SAVECONFIG` command to save the configuration to Non-Volatile Memory (NVM).

> Cellular data consumption and service charges are dependent on the configuration of the SMART6-L and data logging rates.

> Refer to the OEM6 Family Firmware Reference Manual (OM-20000129) for log and command details.

3.2.2 GSM/HSPA Cellular Radio Activation and Configuration

To activate a Relay on a GSM/HSPA cellular network, follow these steps:

1. Contact your preferred GPRS/HSPA cellular service provider.
   For activations on the AT&T network in the U.S., we recommend contacting the Data Activation Center at 1-866-966-8881 (toll-free in U.S.) or via e-mail orders@dataactivationcenter.com to set up an account or add service to an existing account.
2. Obtain an active wireless account and SIM card providing GPRS/HSPA data services (recommended data plans for Network RTK are 5 GB/Month Rate Plans). You may need to provide the following information:
   a. Modem Serial Number (IMEI): Modem serial number from Relay product label
   b. Product Name: Relay-HSPA containing Telit HE-910 cellular module

3. Remove the SIM card cover from the Relay and install the SIM card (mini-SIM (25 mm x 15 mm) only). Once properly installed, secure the SIM cover to the modem using the appropriate screwdriver. Screws should be torqued to 4-6 inch-pound.

> Failure to properly secure the SIM cover will violate Relay IP67 ingress rating.

Figure 14: SIM Card Installation

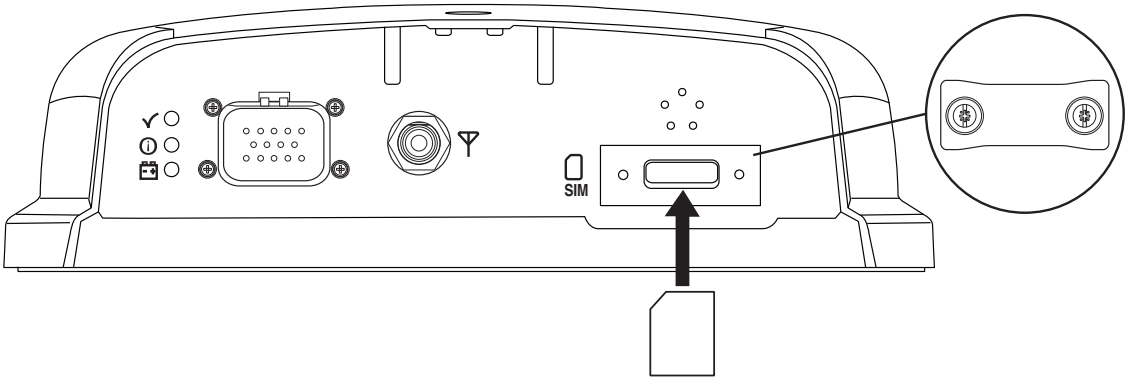

4. Ensure a cellular antenna is connected to the Relay (refer to *Section 2.6, Connect the Radio Antenna* on page 26 for details), apply power (refer to *Section 2.7, Connect Power* on page 28 for details) and then establish a serial connection (refer to *Section 3.1.1, Serial Port Default Settings* on page 31 for details) with your product.
5. Log the following:
   `LOG CELLULARSTATUS ONCHANGED` to display the modem and cellular connection status
   `LOG CELLULARINFO ONCHANGED` to display modem and network information
6. Use the `CELLULARCONFIG` command to configure cellular parameters by issuing the following commands:
   `CELLULARCONFIG APN <APN>` to set Access Point Name (APN) (optional, obtain from your service provider)
   `CELLULARCONFIG USERNAME <USERNAME>` to set the user name (optional, obtain from your service provider)
   `CELLULARCONFIG PASSWORD <PASSWORD>` to set the APN password (optional, obtain from your service provider)
   `CELLULARCONFIG DATA ON` to enable/disable data connectivity on the configured APN
   `CELLULARCONFIG DATAROAM ON` to enable/disable data connectivity when roaming
   `CELLULARCONFIG POWER ON` to enable the radio

7. Once the cellular status reports an IP Address, your product is ready to use.
8. Issue the `SAVECONFIG` command to save the configuration to Non-Volatile Memory (NVM).

> Cellular data consumption and service charges are dependent on the configuration of the SMART6-L and data logging rates.

> Refer to the OEM6 Family Firmware Reference Manual (OM-20000129) for log and command details.

How to Eject a SIM Card

Issue the `CELLULARCONFIG POWER OFF` command to power down the cellular radio before removing a SIM card.

To remove the SIM card, push it slightly in. It should then partially eject from the SIM card holder. The modem does not work if the SIM is in the partially ejected “ready for removal” position. Replace the SIM Card holder cover and ensure the cover is properly aligned and secured.

Issue the `CELLULARCONFIG POWER ON` command to turn the cellular radio on.

3.2.3 400 MHz UHF Radio Configuration

> To configure the 400 MHz UHF radio as a Base Station, use the Web User Interface. See *Chapter 4, Operation—Web User Interface* on page 38.

Follow these steps to configure the Satel M3-TR3 400 MHz radio:

1. Enter `M3TRMODE PROG` to switch the radio into programming mode.
   See *M3TRMODE* on page 83 for more information.
2. Use the `M3TRCONFIG` command to configure the Satel M3-TR3 radio parameters.
   See *Section B.8, M3TRCONFIG* on page 81 for information about this command.
3. Enter `M3TRMODE NORMAL` to switch the radio into normal operating mode.

3.2.4 900 MHz UHF Radio Configuration

> To configure the 900 MHz UHF radio as a Base Station, use the Web User Interface. See *Chapter 4, Operation—Web User Interface* on page 38.

Follow these steps to configure the Freewave MM2-T 900 MHz radio:

1. Enter `MM2TMODE PROG` to switch the radio into programming mode.
   See *MM2TMODE* on page 87 for more information.
2. Use the `MM2TCONFIG` command to configure the Freewave MM2-T radio parameters.
   See *MM2TCONFIG* on page 84 for information about this command.
3. Enter `MM2TMODE NORMAL` to switch the radio into normal operating mode.

3.2.5 Configure a Rover to Receive Corrections – 400 MHz UHF

> To configure the 400 MHz UHF radio as a Base Station, use the Web User Interface. See *Chapter 4, Operation—Web User Interface* on page 38.

Follow these steps to configure the SMART6-L and Relay to receive corrections:

1. The Relay is configured as a rover by default. If the Relay rover/base configuration has not been changed, go to step 3.
   If the Relay has been used as a base station, enter `EPERSONALITY R` to change the Relay to a rover.
2. Enter the `RESET` command, or power cycle the Relay, to complete the change to a rover.
3. Enter the `M3TRMODE PROG` command to switch the radio into programming mode.
   See *M3TRMODE* on page 83 for more information.
4. Use the `M3TRCONFIG` command to configure the Satel M3-TR3 radio parameters to match the settings on the base station radio. See *M3TRCONFIG* on page 81 for information about this command.
5. Enter the `M3TRCONFIG SAVE` command to save the radio configuration.
6. Enter the `M3TRMODE NORMAL` command to switch the radio into normal operating mode.
7. The ICOM ports are used to transmit corrections from the Relay to the SMART6-L.
   Use one of the following commands to set the port and correction type on the SMART6-L.

   RTCA `interfacemode icom1 rtca none off`
   RTCM `interfacemode icom1 rtcm none off`
   RTCMV3 `interfacemode icom1 rtcmv3 none off`
   CMR+ `interfacemode icom1 cmr none off`
   CMR `interfacemode icom1 cmr none off` (*same as CMR+*)
8. Issue the `SAVECONFIG` command to save the configuration to Non-Volatile Memory (NVM).

3.2.6 Configure a Rover to Receive Corrections – 900 MHz UHF

> To configure the 900 MHz UHF radio as a Base Station, use the Web User Interface. See *Chapter 4, Operation—Web User Interface* on page 38.

Follow these steps to configure the SMART6-L and Relay to receive corrections:

1. The Relay is configured as a rover by default. If the Relay rover/base configuration has not been changed, go to step 3.
   If the Relay has been used as a base station, enter `EPERSONALITY R` to change the Relay to a rover.
2. Enter the `RESET` command, or power cycle the Relay, to complete the change to a rover.
3. Enter `MM2TMODE PROG` to switch the radio into programming mode.
   See *MM2TMODE* on page 87 for more information.
4. Use the `MM2TCONFIG` command to configure the Freewave MM2-T radio parameters to match the settings on the base station radio. See *MM2TCONFIG* on page 84 for information about this command.
5. Enter the `MM2TMODE NORMAL` command to switch the radio into normal operating mode.
6. The ICOM ports are used to transmit corrections from the Relay to the SMART6-L.
   Use one of the following command to set the port and correction type on the SMART6-L.

   RTCA `interfacemode icom1 rtca none off`
   RTCM `interfacemode icom1 rtcm none off`
   RTCMV3 `interfacemode icom1 rtcmv3 none off`
   CMR+ `interfacemode icom1 cmr none off`
   CMR `interfacemode icom1 cmr none off` (*same as CMR+*)
7. Issue the `SAVECONFIG` command to save the configuration to Non-Volatile Memory (NVM).

3.3 NTRIP Configuration

> NTRIP is supported on Relays with CDMA or GSM/HSPA cellular radios.
>
> For Relays with 400 MHz and 900 MHz UHF radios, external NTRIP client hardware and software is required and the corrections need to be routed in/out through a serial port.

Network Transport of RTCM via Internet Protocol (NTRIP) is an application protocol used to stream GNSS differential correction data over the Internet.

A SMART6-L using a Relay can be configured as an NTRIP client. For more information about NovAtel's NTRIP, refer to our website at www.novatel.com/products/firmware-options/ntrip/.

Figure 15: NTRIP System

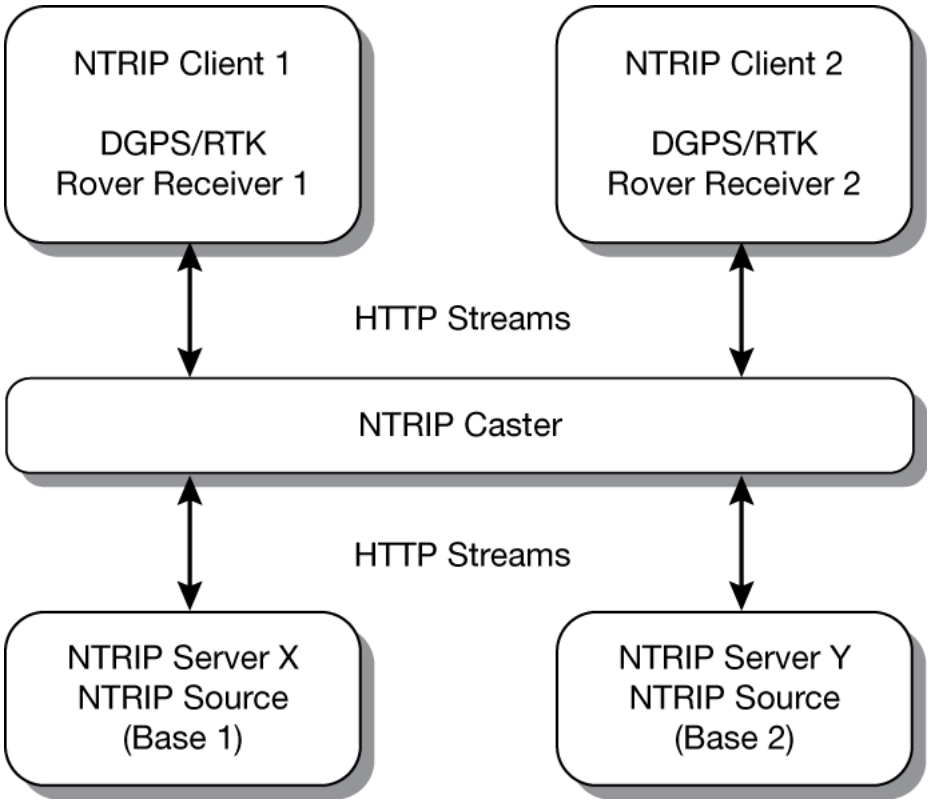

The NTRIP caster is an HTTP Internet service that acts as a communication medium between NTRIP servers and NTRIP clients. The NTRIP caster is provided by third party sources. For a full list of NTRIP casters, refer to the following link: www.rtcm-ntrip.org/home.

The following procedure describes how to configure a NovAtel rover through a third party NTRIP caster. This configuration is recommended for optimal RTK performance.

1. Establish a connection to the receiver.
2. Use the following commands to enable the rover receiver as an NTRIP Client:

```
NTRIPCONFIG NCOM1 CLIENT <protocol> <endpoint> <mountpoint> <username>
<password> <bindInterface>
```

> If using a specific Network RTK system, certain National Marine Electronics Association (NMEA) strings are required to be sent from the rover back to the RTK network. For example, if connected to the VRS mount point, the rover is required to send its position to the network in a standard NMEA GGA message. This is achieved by issuing the following command: `LOG NCOMx GPGGA ONTIME 5`, until data is received by the caster. For more information about Network RTK options and properties, refer to the application note APN-041 Network RTK for OEMV Receivers found on our website at www.novatel.com/support/search/.

The following is an NTRIP Client configuration example without the use of a Network RTK system:

```
INTERFACEMODE NCOM1 RTCA NONE OFF
RTKSOURCE AUTO ANY
PSRDIFFSOURCE AUTO ANY
LOG BESTPOS ONTIME 1 (optional)
SAVECONFIG
```

Chapter 4 Operation—Web User Interface

The Relay Web User Interface (Web UI) provides monitoring and configuration access to the Relay from a Wi-Fi enabled mobile device, such as a laptop, tablet or smartphone.

Before accessing the Relay from the Web UI, the SMART6-L and Relay must be connected and powered on. See the installation instructions in *Chapter 2, Installation and Setup* on page 18.

> The Web UI is available only on UHF radio models of the Relay.
> Other Relay models do not have the Wi-Fi AP functionality required for Web UI.

4.1 Configuring the Wi-Fi

Before using the Web UI, the Wi-Fi must be configured on the Relay and the mobile device.

The following steps must be performed to set up the Wi-Fi:

1. Configure the Wi-Fi Access Point (AP) on the Relay. See *Section 4.1.1, Wi-Fi Access Point Setup (UHF radio models only)* on page 38.
2. Access the Relay Wi-Fi AP from the mobile device. See *Section 4.1.2, Accessing the Relay Wi-Fi AP* on page 39.

4.1.1 Wi-Fi Access Point Setup (UHF radio models only)

The Wi-Fi radio, available on UHF radio Relay models only, acts as an AP that allows Wi-Fi enabled devices, such as laptops, tablets and smartphones, to communicate with the Relay.

With the Relay and SMART6-L connected, the Relay Wi-Fi AP can be configured.

1. Connect the Relay to a computer using a serial cable to the COM1 port (9600).
2. Open a terminal emulator program, for example Tera Term.
3. Turn power on.
4. At the `[COM1]` prompt, enter: `EPERSONALITY B` [return].
   Refer to *Section B.3, EPERSONALITY* on page 75 for command details.
5. Reset the Relay.

The Relay is now set up as a Wi-Fi network Access Point.

By default, the Wi-Fi AP is enabled with the following settings:

- IP address: 192.168.2.1
- Protocol: bgn
- Authentication: WPA PSK
- Encryption: AES_CCMP
- SSID: Printed on a label attached to the Relay
- Passphrase: Printed on a label attached to the Relay
- DHCP: Enabled

> The SMART6-L antenna must be configured with the correct FW model otherwise the Relay base functionality does not work. Valid models include D2L-RPG-TTN-P and D2L-BPG-TTN-P.

> NTRIP is not supported over a Wi-Fi connection.

4.1.2 Accessing the Relay Wi-Fi AP

This procedure must be done on the Wi-Fi enabled device before you can log in to the Web UI.

> This section provides a high level procedure for accessing the Relay Wi-Fi AP. The actual steps required will vary depending on the device being used and operating system installed on that device. For detailed steps, refer to the user documents that came with your device and operating system.

1. On the Wi-Fi enabled device, scan the available Wi-Fi networks and locate the RELAY_XXXX in the list of available networks (example: RELAY_PSN).
2. Select the Relay from the list.
3. When prompted, enter the Wi-Fi password. The default password is located on the label located on the back panel of the Relay.

The device is now connected to the Relay Wi-Fi and can be used to log in to the Web UI.

4.2 Logging in to the Web UI

> Cookies should always be on and never blocked on the browser being used to connect to the Wi-Fi network.
>
> If SMART6-L or Relay firmware has recently been upgraded, clear the browser cache before logging into the WebUI

1. Open a web browser on the mobile device and enter **http://192.168.2.1** in the address bar.
   The following screen appears:

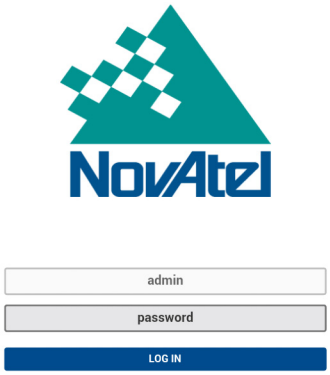

2. The default user name is always **admin** and cannot be changed.
3. Click or tap on the password button and enter the Web UI password (the default password is **password**) and press the LOG IN button.
   The Web UI password can be changed (refer to *Section 4.4.4, Change the Password* on page 55 for details).
   After the application loading is complete, the main Web UI page appears.

4.3 Web UI Overview

After logging in, the main page of the Web UI appears on the device.

> Page display is dependent on the mobile device, screen size and device orientation.

Figure 16: Main Page

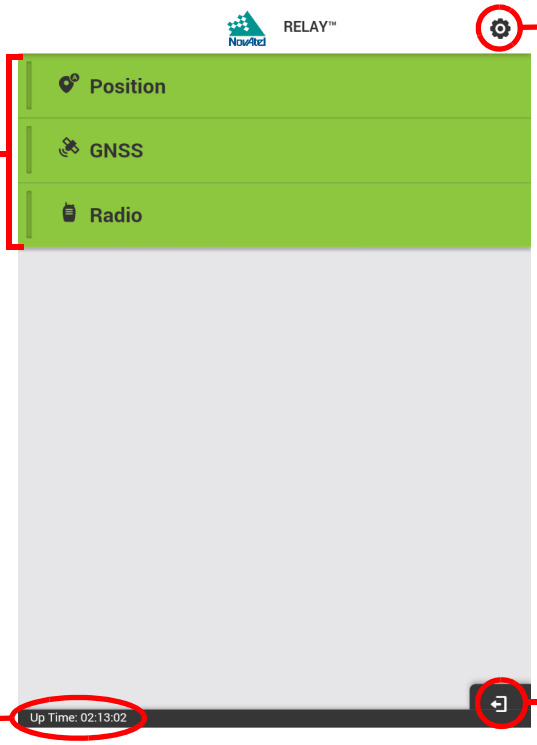

Tools Icon

Access the Tools page. See *Tools Page* on page 43.

Function Bars

The color of the Function Bar indicates the status of the function. Refer to *Table 5, Function Bar Status* on page 41.

Tap the bar to view the status of the function. See *Status Pages* on page 41.

Drag the bar to the right to access the configuration page for the function. See *Configuration Pages* on page 42.

Up time

Indicates the time the Relay has been operating since the last power up

Logout Icon

On devices with sufficiently wide screens, such as a laptop or a tablet held sideways, the main page displays the three function bars along the top of the page. In this layout, the main page also shows the status information for all three functions.

Figure 17: Main Page—Wide

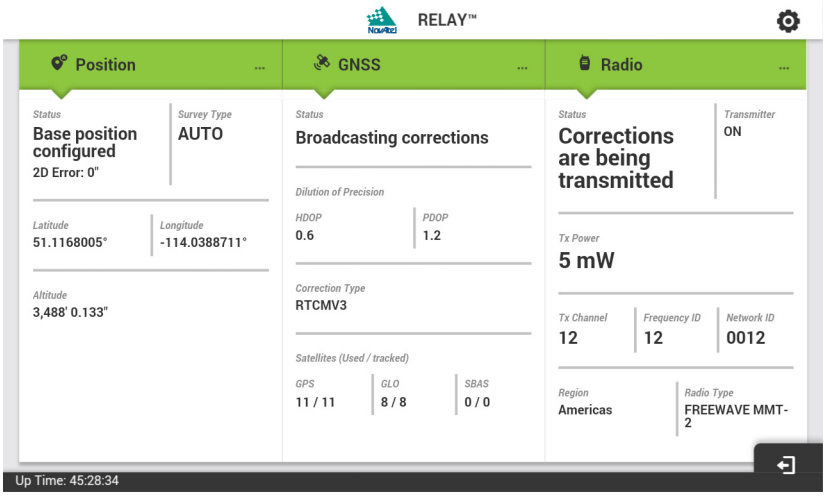

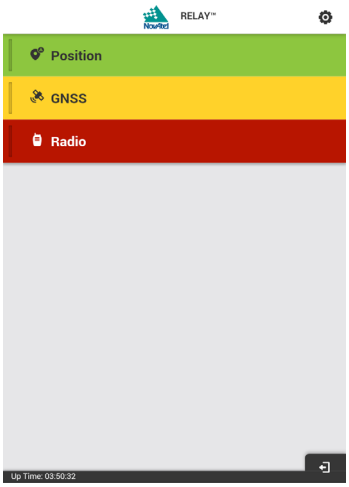

Table 5: Function Bar Status

Color	Position	GNSS	Radio
Green	Base position configured The Position icon changes to indicate if Fixed or Auto is selected	Broadcasting corrections	Corrections being transmitted
Yellow	Surveying	Corrections generated. Radio is off or the position has not been set.	Corrections not being sent. Turn on the radio
Red	No position. Position configuration required	No corrections. GNSS configuration required	Corrections not being sent. Radio is off

4.3.1 Status Pages

To view the status of a function (e.g. Position), tap the Function Bar.

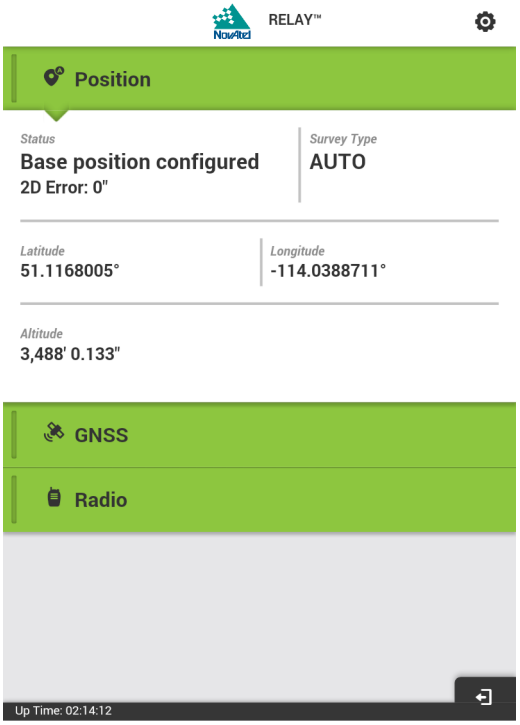

Tap the function bar again to close the status page.

4.3.2 Configuration Pages

To access the configuration options for a function (e.g. GNSS), pull/slide the Function bar to the right.

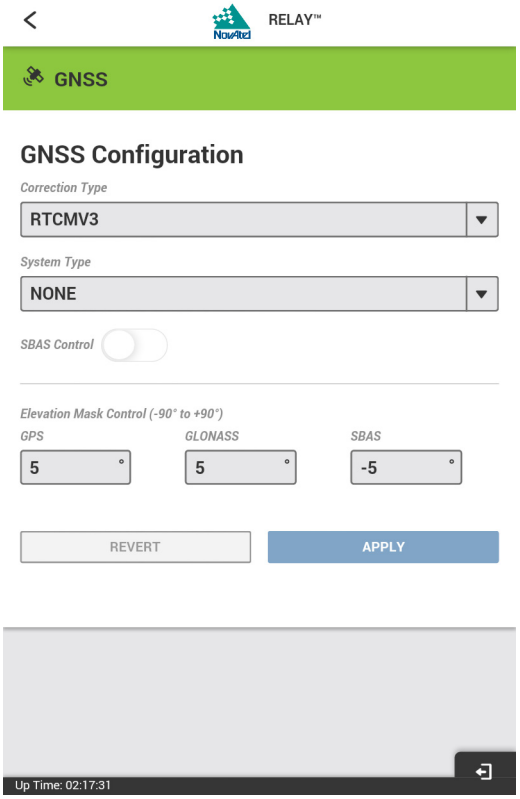

Use the back arrow < in the upper left corner to return to the Main Page.

4.3.3 Tools Page

Click the Tools icon to open the User Preferences page.

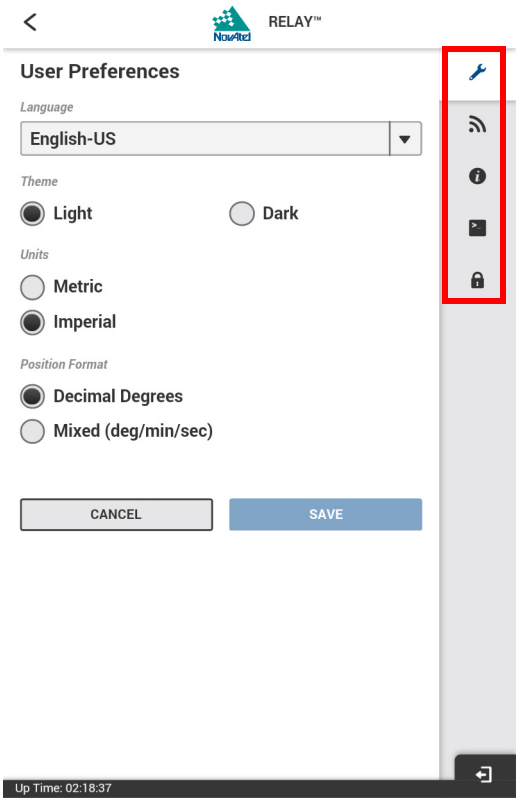

On the right side of the page, there are several tabs that provide access to other Web UI tools. Refer to *Table 6, Tool Tab Definitions*.

Table 6: Tool Tab Definitions

	User Preferences Use the options on this page to select language, a light or dark display, units of measure and position format.
	Wi-Fi Use the options on this page to set the AP name or SSID, change the Wi-Fi password, change the Authentication Protocol Type, change the Encryption Protocol and enable or disable broadcasting the SSID.
	Device Info Displays information about the Relay and SMART6-L including serial numbers, receiver mode, version numbers and supported features (use for requesting model upgrades)
	Terminal Use this page to enter commands and view responses and logs.
	Password Use this page to change the Web UI password (the admin user name cannot be changed). For security reasons, NovAtel recommends changing the default password.

4.4 Configuring the Relay

The Web UI can be used to perform several Relay configuration tasks for the Base Station.

> Rover configuration tasks cannot be performed using the Web UI. The command line interface must be used. See *Section 3.2.2, GSM/HSPA Cellular Radio Activation and Configuration* on page 33 to *Section 3.2.6, Configure a Rover to Receive Corrections – 900 MHz UHF* on page 35 for configuration procedures and *Appendix B, Commands* on page 72 for descriptions of available commands.

4.4.1 Configure the Base Station Position—Overview

Before a Base Station can send differential corrections, the position of the Base Station must be determined and fixed. The Auto-Survey function uses GNSS position data, reported by the SMART6-L, to determine the current position of the Base Station. Up to 32 Base Station locations can be saved and stored in the SMART6-L NVM. Locations can be stored using the AUTO tab or the MANUAL tab. In addition, an Auto-Survey can be performed at power up and that new position used for the Base Station location, or, if a position is known, it can be manually entered using the MANUAL tab. Once the 33rd position is ready to be saved, it will overwrite the oldest used position to maintain a total of 32. Positions can be saved manually or automatically using the different tab settings.

Upon each power up, any of the stored positions are checked to determine if the Base Station is within the defined range and/or position attributes. If it is, then that position is loaded and can be used as the fixed position. Each time the Relay is powered down and/or moved, a Base Station position must be established at the next power up and/or location.

> A Base Station must never be moved while receiving corrections.

The AUTO tolerance is preset to 4 metres and cannot be changed; the MANUAL tolerance can be changed as needed.

4.4.1.1 Position Configuration—AUTO Tab (Auto-Survey)

An Auto-Survey is performed upon each power up. For AUTO tab, a fixed 4 m tolerance is set and cannot be changed. If the Base Station location is not located within a previously stored location, a new Auto-Survey begins.

> If the exact position of the Base Station is known (e.g., from a survey marker), the Base Station position can be set using the MANUAL tab. See *Position Configuration—MANUAL Tab* on page 46.

> The Position window does not require that the AUTO tab be selected before a shut down.

1. From the Web UI main page, pull/slide the *Position* function bar to the right. The Position Configuration window appears.

2. If the AUTO tab is not selected (tab is white when selected), click the AUTO tab. The AUTO survey options window displays.

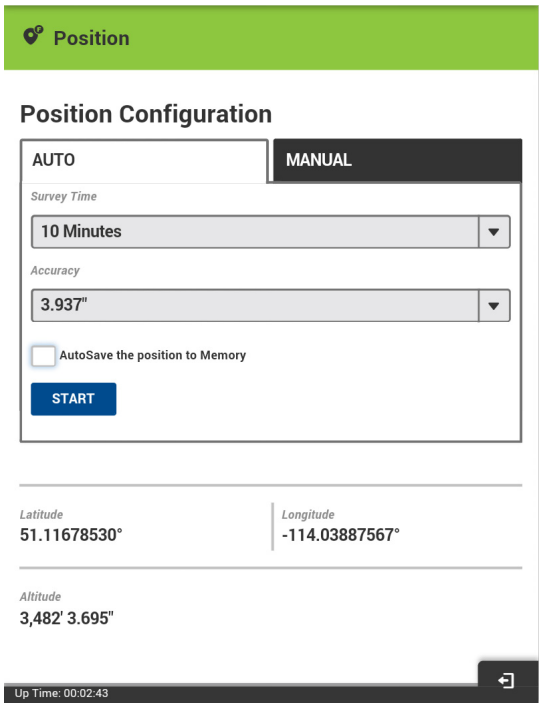

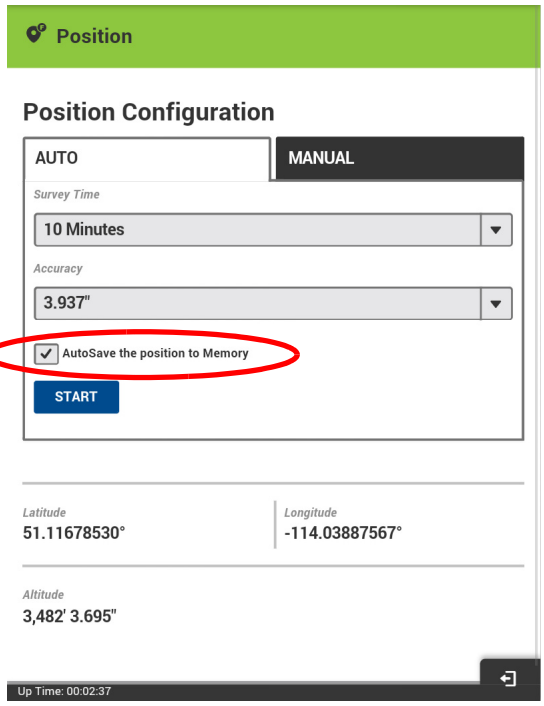

3. From the *Survey Time* drop menu, select the maximum time allowed for the Auto-Survey to run (10 minutes-24 hours).
4. From the *Accuracy* drop menu, select the accuracy level target (3.937”-32’9.701”). The Auto-Survey stops when the specified level of accuracy is achieved.

> If IGNORE is selected from the Accuracy drop menu, the Auto-Survey is based solely on the Survey Time setting and runs for the time specified in the Survey Time field.

5. If required, check on the *AutoSave the position to Memory* checkbox to automatically save the current position to memory or uncheck as required.
6. Press the *START* button.
7. The Transmitting Corrections prompt displays. Press the *YES* button to continue.

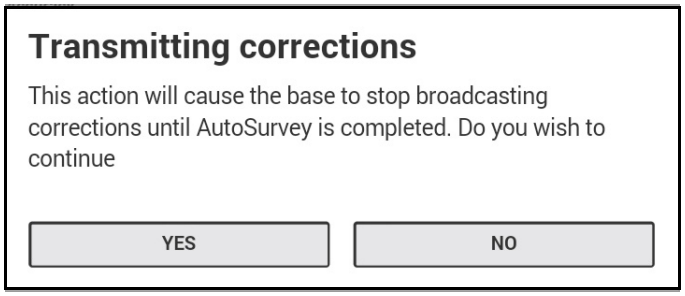

The Auto-Survey runs until the specified level of accuracy is achieved or the maximum survey time is met. A progress bar indicates the time remaining required to finish the Auto-Survey.

A survey can be stopped from the AUTO tab by pressing the *STOP* button. A prompt displays with options on how to proceed.

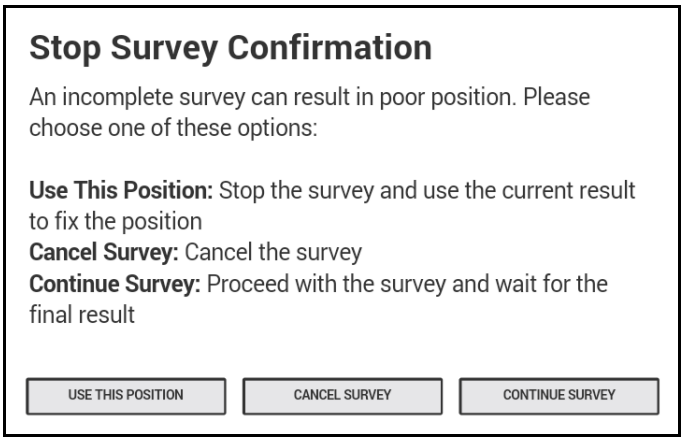

When a survey is complete, the Position function bar changes to green and the calculated position displays at the bottom of the page.

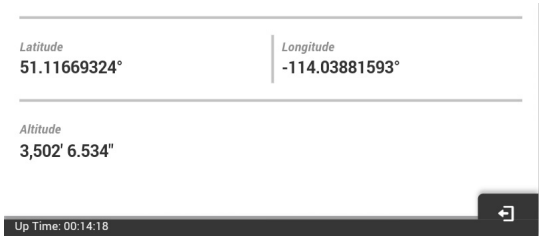

4.4.1.2 Position Configuration—MANUAL Tab

If the exact position where the Relay is located is known, the Base Station position can be entered manually.

> When setting the Base Station position manually, any error in the position entered results in the same amount of error being added to the differential position provided.
>
> Make sure the position in which the Relay is placed is accurately surveyed or the Relay is placed precisely over a survey marker.

1. From the Web UI main page, pull/slide the *Position* function bar to the right. The Position Configuration page appears.

2. Click on the MANUAL tab. The MANUAL survey options window displays.

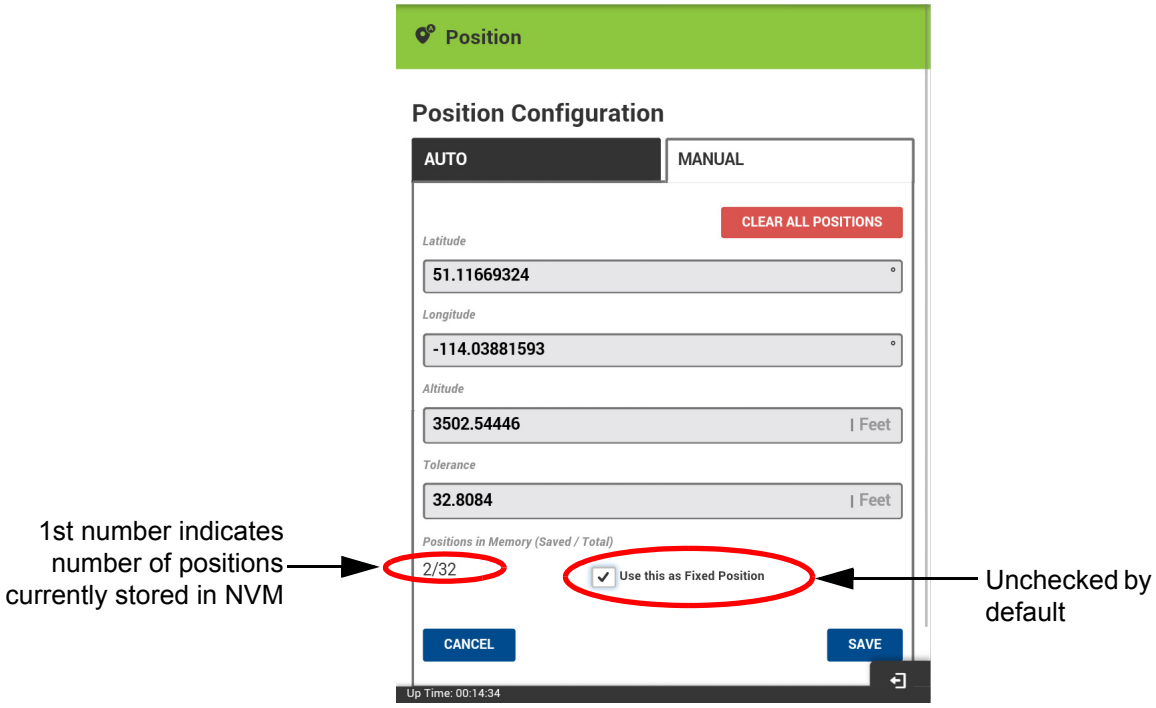

3. If necessary, press the *CLEAR ALL POSITIONS* button. Any and all positions currently stored in memory are deleted.

> Clearing all positions causes the receiver to reboot.

4. Enter the *Latitude and Longitude* if known or use the Fixed Position checkbox to use the currently surveyed position.
5. Enter an *Altitude*.
6. Enter a *Tolerance* level.

> Various messages may appear in red at the bottom of the window indicating any issues with values entered. Messages appear in blue indicating success.

7. To enter multiple locations and store in memory for future use, do not check the *Use this a Fixed Position* checkbox. Only check to use the current position.
8. Press the *SAVE* button.
9. If the *Use this a Fixed Position* checkbox was checked, the following prompt displays:

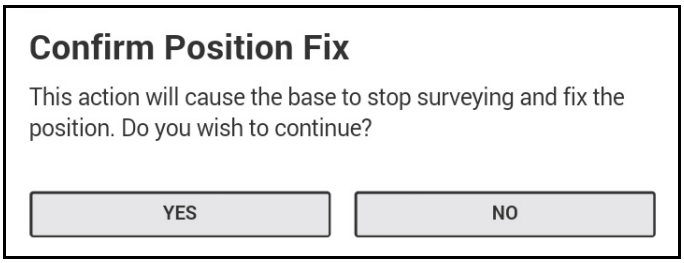

10. Press the *YES* button to use the currently displayed position settings.

11. If an invalid position is entered and the *SAVE* button pressed, the following messages display in red:

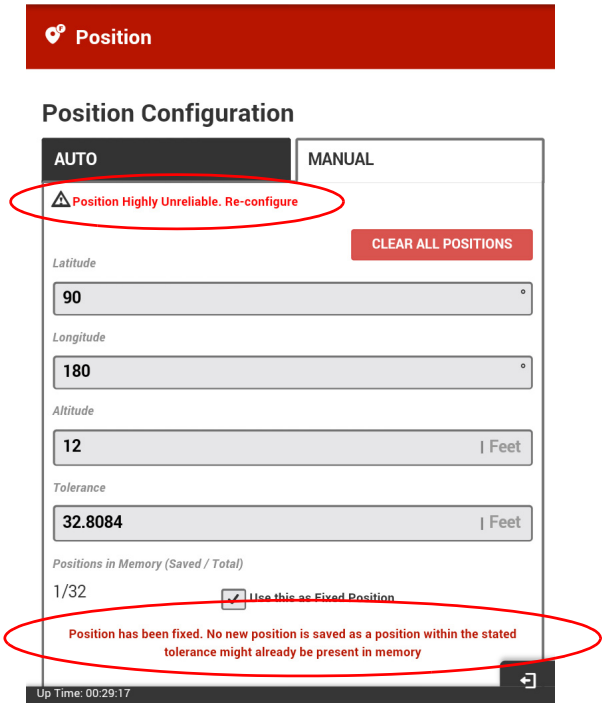

12. If the Memory is Full and the *SAVE* button is pressed, the following prompt displays:

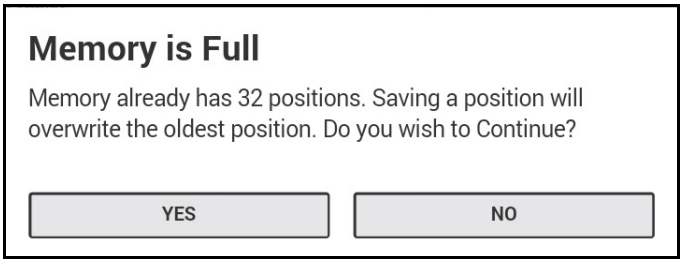

13. Press the *YES* button to continue. The Position function bar changes to green when complete.
14. Use the *CANCEL* button to not save a position into memory.

4.4.2 Configure the GNSS Parameters

4.4.2.1 Set the Elevation Mask

1. From the Web UI main page, pull the *GNSS* function bar to the right. The GNSS Configuration page appears.

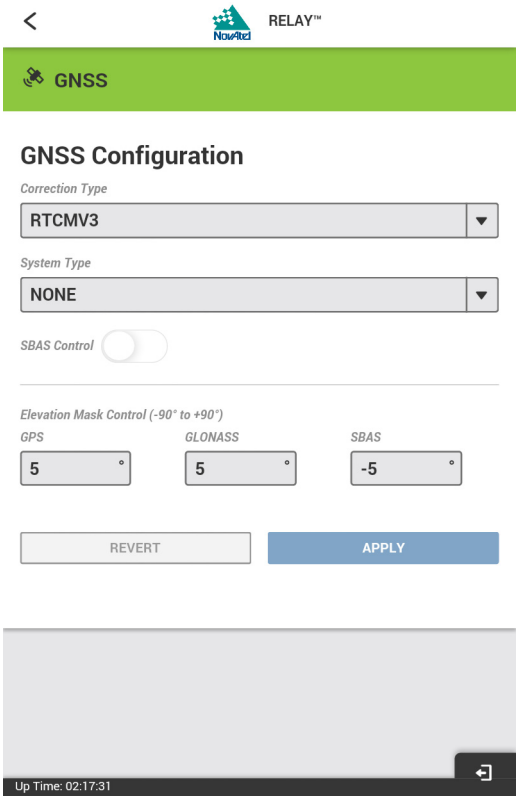

2. Enter the elevation masks for GPS satellites, GLONASS satellites and SBAS satellites in the appropriate elevation mask fields.
3. Press the *Apply* button to save the changes.

4.4.2.2 Enable/Disable SBAS Corrections

1. From the Web UI main page, pull the *GNSS* function bar to the right. The GNSS Configuration page appears.

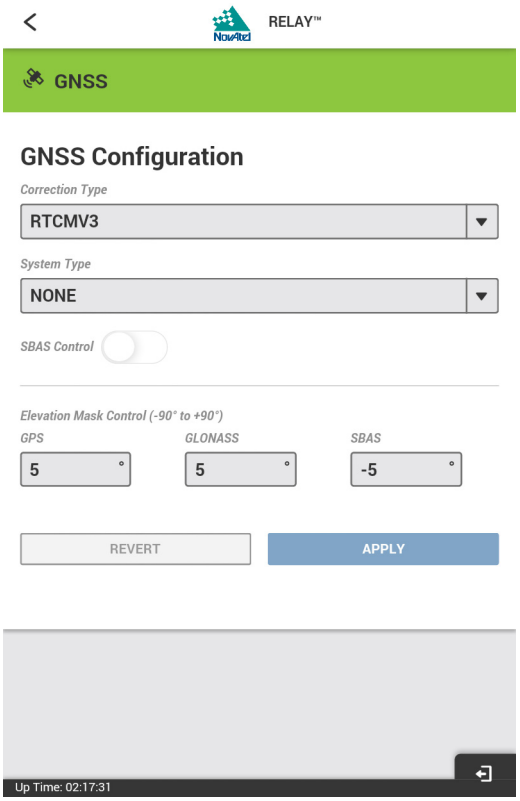

2. Press the *System Type* drop menu and select the SBAS system the base station will use for corrections.
3. To enable SBAS corrections, slide the *SBAS Control* button to the right. The SBAS Control bar changes from white to green.
   To disable SBAS corrections, slide the *SBAS Control* button to the left. The SBAS Control bar changes from green to white.
4. Press the *Apply* button to save the changes.

4.4.2.3 Set the RTK Correction Message Type

1. From the Web UI main page, pull the *GNSS* function bar to the right. The GNSS Configuration page appears.

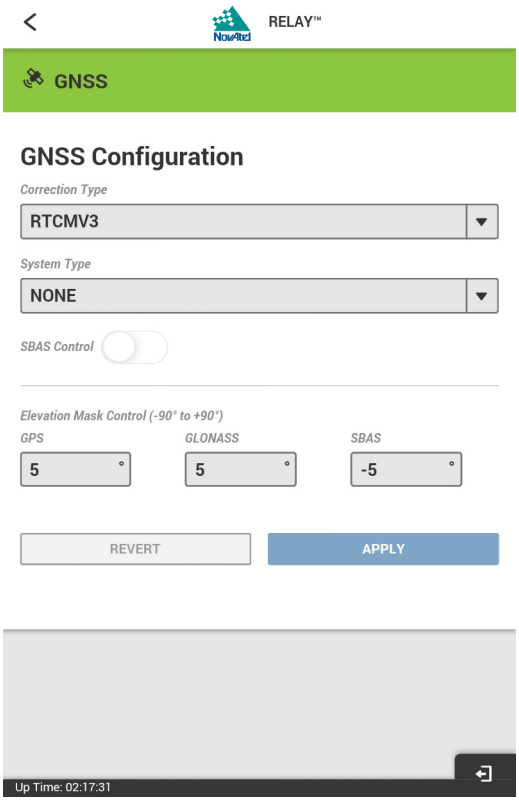

2. Press the *Correction Type* drop menu. A list of correction types appears.
3. Press the correction type to use on the base station.
4. Press the *Apply* button to save the changes.

The GNSS function bar turns yellow indicating that it is ready to transmit corrections, but is still waiting for the Radio to be activated. The GNSS function bar will also be yellow if the base station position has not be set. When the GNSS function bar turns green, it is transmitting corrections.

4.4.3 Configure the Radio Parameters

4.4.3.1 Set the Radio Parameters—400MHz Radio

Use this procedure to configure Relay models with the Satel M3-TR3 400 MHz UHF radio.

1. From the Web UI main page, pull the *Radio* function bar to the right. The Radio Configuration page appears.

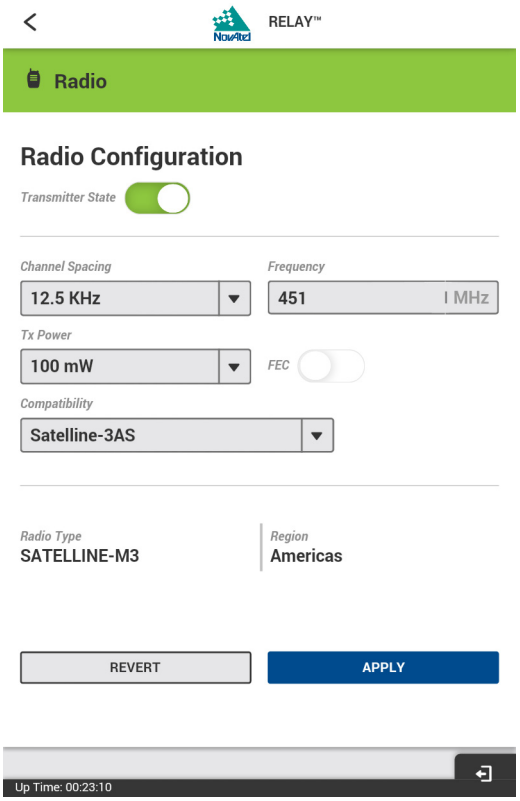

2. Press *Channel Spacing* drop menu and select the channel spacing to be used by the radio.

> If the *Channel Spacing*, *Frequency* and *TX Power* drop menus are dimmed, you cannot change these values. This indicates that the radio settings have been pre-programmed and locked by your dealer or supplier. Contact your dealer, supplier or NovAtel for further information.

3. Press *Frequency* box and enter the frequency to use. The valid range is 403 to 473 MHz.
4. Press the *TX Power* drop menu and select the transmit power to be used by the radio.
5. To enable Forward Error Correction, slide the FEC button to the right. The *FEC* bar changes from white to green.
   To disable Forward Error Correction, slide the FEC button to the left. The *FEC* bar changes from green to white.
6. Press the *Compatibility* drop menu and select the compatibility mode used by the radio.
7. Press the *Apply* button to save the changes.

After the radio configuration is complete, the radio needs to be enabled. See *Enable or Disable the Radio* on page 54.

4.4.3.2 Set the Radio Parameters—900MHz Radio

Use this procedure to configure Relay models with the Freewave MMT-2 900 MHz UHF radio.

1. From the Web UI main page, pull the *Radio* function bar to the right. The Radio Configuration page appears.

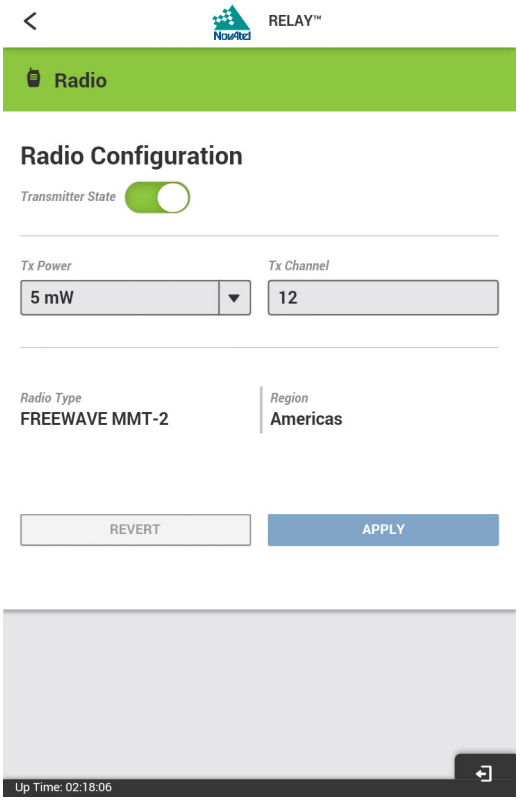

2. Press the *Tx Power* drop menu and select the transmit power to be used by the radio.
3. Press the *Tx Channel* box and enter the transmit channel used by the radio.
4. Press the *Apply* button to save the changes.

After the radio configuration is complete, the radio needs to be enabled. See *Enable or Disable the Radio* on page 54.

4.4.3.3 Enable or Disable the Radio

1. From the Web UI main page, pull the *Radio* function bar to the right. The Radio Configuration page appears.

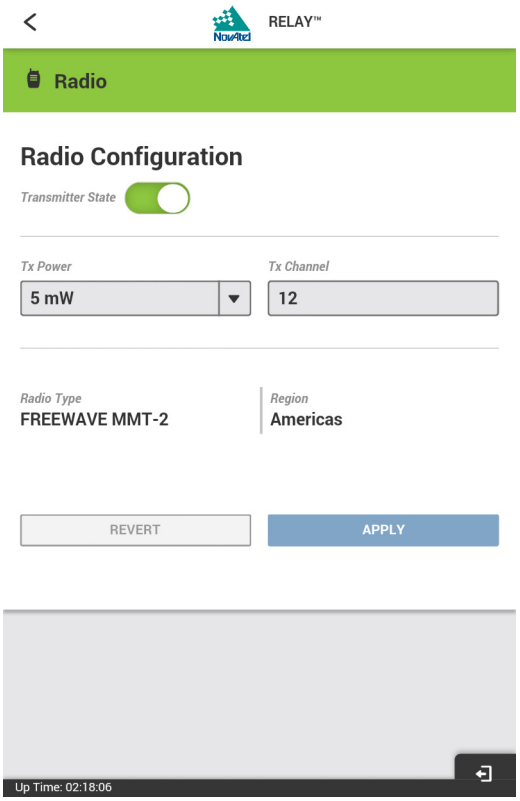

2. To enable the radio, slide the *Transmitter State* button to the right. The Transmitter State bar changes from white to green.
   To disable the radio, slide the *Transmitter State* button to the left. The Transmitter State bar changes from green to white.
3. Press the *Apply* button to save the changes.

4.4.4 Change the Password

For security reasons, NovAtel recommends changing the default Web UI password. Use the following steps to change the password.

1. Click the Tools icon and select the Password icon from the tool bar.

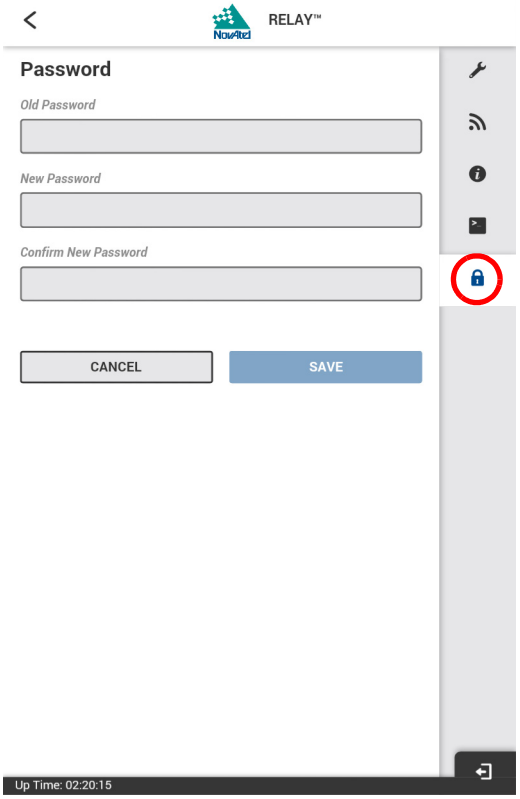

2. Enter the default or old password.
3. Enter the new password and confirm.
4. Press SAVE to confirm the password change.
5. Use the back arrow in the upper left corner to return to the main page.

4.4.5 Reset the Web UI Password

If the Web UI password is lost, use the following procedure to reset the password:

1. Connect a terminal or a computer to the COM1 or COM2 serial port on the Relay.
2. Issue the following command: `FRESET USER_ACCOUNTS`

The Web UI password is reset to the enclosure Product Serial Number (PSN) of the SMART6-L attached to the Relay (e.g. NMELxxxxxxx). To determine the SMART6-L PSN, issue the `LOG VERSION` command. See *Section C.6, VERSION* on page 103 for information about this log.

Log Version Example:

```
<VERSION COM2 0 67.0 FINESTEERING 1843 399642.979 00100000 3681 13381

< 6

< GPSCARD "D2LRPGTTNP" "BFN14440513" "OEM628-2.01" "OEM060610RN0000"
"OEM060201RB0000" "2015/Mar/19" "11:23:29"

< DB_USERAPPAUTO "SmartCom" "0x0" "" "ESCOM0200RN0001" "" "2015/Mar/26"
"17:03:17"

< ENCLOSURE "Smart6-L" "NMEL14490081H" "" "" "" "" ""

< EXTENSION "SmartCom" "NMGL14430017D" "1.02" "ESC010101RN0000"
"ESC010100RB0000" "2014/Dec/03" "11:47:35"

< RADIO "DMM2TLF" "863-5428" "1.0" "v10.6.8" "" "" ""

< WIFI "TiWi-BLE" "" "Rev 6.3.10.0.139" "1.0" "" "" ""
```

After resetting the Web UI password, change the password using the procedure in *Section 4.4.4, Change the Password* on page 55.

4.5 Logging out

On any Web UI page, press the log out icon .

Chapter 5 Updating Relay Product Firmware

The Relay product firmware can be updated using the WinLoad utility or the ESOFTLOAD command. To obtain the WinLoad utility, go to the Downloads section of www.novatel.com/support/search/.

5.1 Using the WinLoad Utility

If opening WinLoad for the first time, ensure the file and communications settings are correct. Use COM3 on the Relay when updating using the WinLoad utility.

5.1.1 Open a File to Download

Select File | Open. Navigate to the file to open (*Figure 18)*.

Figure 18: WinLoad Open Window

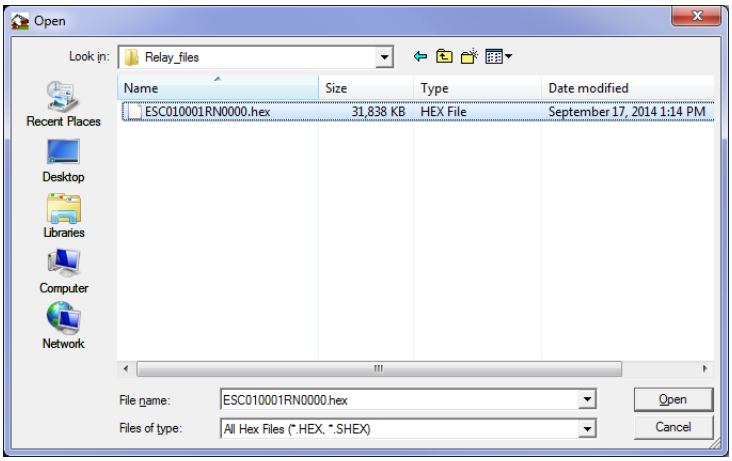

When a file is selected, the `filename` appears in the main WinLoad display area and in the title bar (*Figure 19).*

Figure 19: Open File in WinLoad

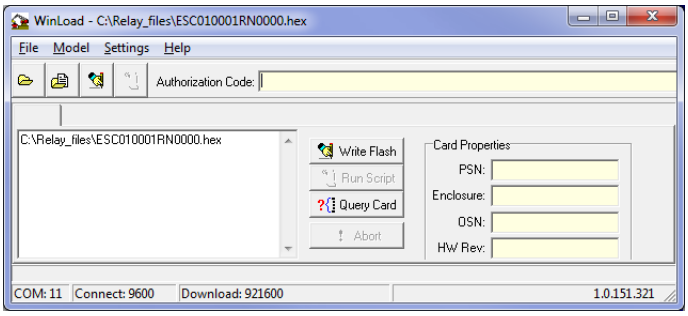

5.1.2 Communications Settings

To set the communications port and baud rate, select Settings | COM Settings.

> WinLoad can use any available COM port on the PC. The Relay must use COM3.

Choose the computer port to use from the Com Port drop down list and the baud rate from the Download Baudrate drop down list. Set the baud rate as high as possible (the default of 115200 is preferred if a higher baud rate is not available).

5.1.3 Downloading Firmware

1. Select the file to download according to *Open a File to Download* on *Page 57*.
2. Ensure the file path and name are displayed in main display area (see *Figure 19, Open File in WinLoad* on *Page 57*).
3. Click Write Flash to download the firmware.
4. When `Searching for card` appears in the main display, power cycle the Relay.
5. The Relay finishes the download and then resets. The process is complete when `Done` appears in the main display area.
6. Close WinLoad.

5.2 Updating Using ESoftLoad Commands

The ESoftLoad process is made up of a set of commands and logs that are used to send new firmware data to the Relay and check the progress of the update. Use ESoftLoad if automated loading is desired or if a connection is only possible through COM1 or COM2.

5.2.1 ESoftLoad Commands and Logs

Command	Description
ESOFTLOADRESET	Initiate a new ESoftLoad process
ESOFTLOADSREC	Send an S-Record to the Relay for the ESoftLoad process
ESOFTLOADDATA	Send firmware image data to the Relay for the ESoftLoad process
ESOFTLOADCOMMIT	Complete the ESoftLoad process
Log	**Description**
ESOFTLOADSTATUS	Provides status updates for the ongoing ESoftLoad process

Each command and log can be used in abbreviated ASCII, ASCII or binary format, with the exception of ESOFTLOADDATA, which should only be used in binary format.

File Types

Firmware data is stored in *.hex files as ASCII data in the form of S-Records, based on the Motorola S-Record format.

5.2.2 Working With S-Records

Each S-Record has a header indicating the type of information contained in the record.

Records beginning with S0, S5 and S7 contain metadata about the firmware image, such as version information and which card types are supported by the firmware image.

Example S0 Record

```
S0~V~OEM060400RN0000
```

Example S5 Records

```
S50000
S503D9FE25
S5033158D5A
```

Example S7 Records

```
S70000
S70500000000FA
```

Records beginning with S3 contain the actual firmware image data. Aside from the header, each pair of characters forms the ASCII representation of a binary byte.

The format is as follows:

S3	LL	AAAAAAAA	DDDDDDDD...DDDDDDDD	CC
				Check Sum.
			Little Endian Data. These bytes are copied into the "data" field of the `ESOFTLOADDATA` command	
		4 - Byte Address. Set this as the value of "offset" in the ESOFTLOADDATA command		
	Length. This is the hexadecimal number of character pairs to follow in the record. This value minus 4 bytes for the address and 1 byte for the check sum is copied into the "data length" field of the `ESOFTLOADDATA` command			
Header				

5.2.3 Sending Firmware Data

C++ source code is available to provide example code of processing S-Records and converting them to NovAtel format commands, as well as providing help with the ESoftLoad process. Contact NovAtel Customer Support and ask about the srec2esoftload utility.

The `ESOFTLOADSREC` and `ESOFTLOADDATA` commands can be used to send firmware data from the *.hex file to the Relay.

S0, S5 and S7 S-Records should be sent directly to the Relay using the `ESOFTLOADSREC` command, by enclosing the S-Record in quotation marks and issuing the command to the Relay, as follows:

```
ESOFTLOADSREC "<S-RECORD>"
```

The data from an S3 record can be parsed and packaged together with data from other S3 records into a binary `ESOFTLOADDATA` command. Packaging data parsed from multiple S3 records into a binary `ESOFTLOADDATA` command can result in improved firmware update times as each S3 record contains only a small number of bytes of firmware data. A single `ESOFTLOADDATA` command can package up to 492 bytes of firmware data from multiple S3 records, whereas a single `ESOFTLOADSREC` command contains a maximum of 28 bytes of firmware data from a single S3 record.

Multiple S3 records can be packaged into a single `ESOFTLOADDATA` command as long as the data from one S3 record follows immediately after the previous record. That is, the address from the current S3 record must equal the address from the previous S3 record plus the data length of the previous S3 record. If the data is not consecutive then the `ESOFTLOADDATA` command can be sent with the amount of data it has packaged up to that point. Subsequent data can be packaged in a new `ESOFTLOADDATA` command. Within the `ESOFTLOADDATA` command, the "offset" field remains the address of the first S3 record and the "data" and "data length" are updated to include the new data.

Example Packaging Multiple S3 Records In A ESOFTLOADDATA Command

Start a new `ESOFTLOADDATA` command

`S32100407AD48FCA63034B80F5CE0C36507DE3D8DCC0C6C0C00515D74BCACF2F2949E1`

Address: 0x00407AD4 Num Data Bytes: 0x21 – 0x01 – 0x04 = 0x1C

`S32100407AF04CCA4985F0F7B081E41D9B7D806C26989AE2D4E4CCBCB47C10FBFD3E43`

Previous Address + Previous Num Bytes = 0x00407AD4 + 0x1C = 0x00407AF0

Address: 0x00407AF0 Num Data Bytes: 0x1C

Add data to existing `ESOFTLOADDATA` command

`S30D00407B0CDE0400A6374D5BFFC5`

Previous Address + Previous Num Bytes = 0x00407AF0 + 0x1C = 0x00407B0C

Address: 0x00407B0C Num Data Bytes: 0x0D – 0x01 – 0x04 = 0x08

Add data to existing `ESOFTLOADDATA` command

`S3210000000007F0A7F1F4060000147B4000F49217813C7BB00014493F005C00000009`

Previous Address + Previous Num Bytes = 0x00407B0C + 0x08 = 0x00407B14

Address: 0x00000000 Num Data Bytes: 0x1C

Requires new `ESOFTLOADDATA` command because address does not match previous address + previous number of data bytes

Send existing `ESOFTLOADDATA` command, and start a new `ESOFTLOADDATA` command

`S3210000001C80040000E00100003000000082B0100D8060000E4060000C806000063`

Address: 0x0000001C Num Data Bytes: 0x1C

Previous Address + Previous Num Bytes = 0x00000000 + 0x1C = 0x0000001C

Add data to existing `ESOFTLOADDATA` command

The `ESOFTLOADDATA` command must be sent as a NovAtel binary format command.

5.2.4 SoftLoad Update Method

This section describes the sequence of commands that are issued to the Relay when updating using a *.hex file.

> The response for each command must be processed before sending the next command so as to determine if the command was accepted or rejected, and to wait for the Relay to complete the operation. Responses to ESoftLoad commands are guaranteed to be output from the Relay within a specific time, which varies by command.

1. Open a connection to any port on the Relay (COM1 or COM2) with the input and output INTERFACEMODE set to NOVATEL.
2. Request the ESOFTLOADSTATUS log using the following command:
   `LOG ESOFTLOADSTATUSA ONCHANGED`
3. Initialize ESoftLoad with a `ESOFTLOADRESET` command.
4. Open the *.hex firmware file.
5. Read each line of the *.hex firmware file.
   A. Send S0, S5 and S7 S-Records directly to the Relay using the `ESOFTLOADSREC` command. The S-Record must be enclosed in quotation marks:
      `ESOFTLOADSREC "<S-RECORD>"`
   B. S3 S-Records must be parsed and packaged into a `ESOFTLOADDATA` command.

6. Send the `ESOFTLOADCOMMIT` command after all data from the *.hex file has been transferred to the Relay. The ESOFTLOADSTATUS log reports the status of the loading process. Wait for a ESOFTLOADSTATUS log to indicate the status is COMPLETE. The Relay will continue to retry until COMPLETE.
7. Reset the Relay using any of the following methods:
   A. Enter the `RESET` command
   B. Enter the `FRESET` command
   C. Power-cycle the Relay

Once the Relay resets, the new version of firmware is active.

The ESoftLoad process can be safely canceled at any time using the `ESOFTLOADRESET` command or by otherwise resetting the Relay. Once the COMPLETE status is reported by ESOFTLOADSTATUS, the firmware is running.

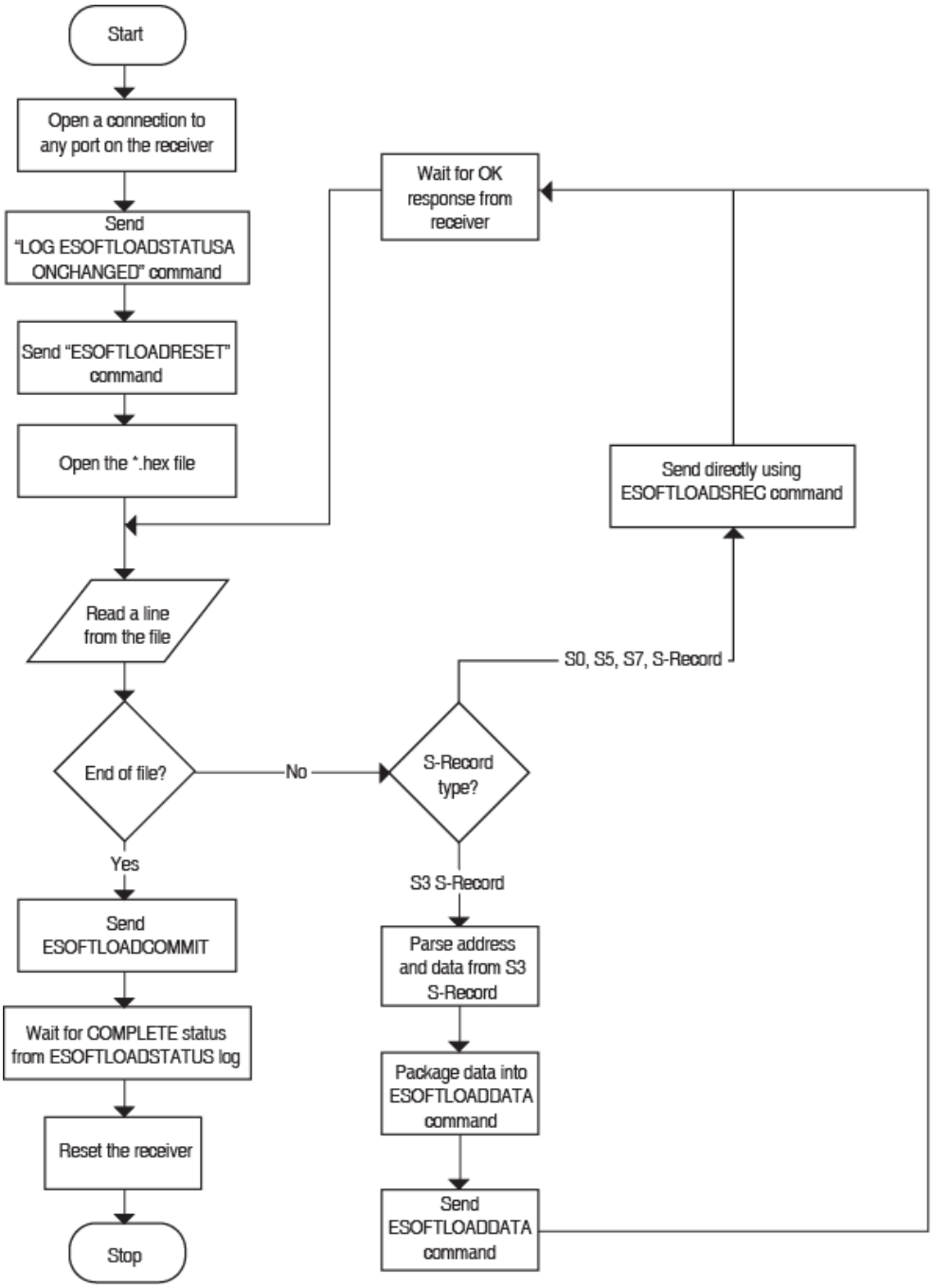

5.2.5 ESoftLoad Logs

Each command and log can be used in abbreviated ASCII, ASCII or binary format.

Log	Description
ESOFTLOADSTATUS	Provides status updates for the ongoing ESoftLoad process

5.2.6 ESoftLoad Errors

It is possible for errors to occur during the ESoftLoad update. All command responses should be checked to verify all issued commands were accepted. The ESoftLoad status must be monitored in the ESOFTLOADSTATUS log. Any status enum value greater than the ERROR status indicates an error has occurred during the ESoftLoad update. In the event of an error, the ESoftLoad update should be restarted by issuing a `ESOFTLOADRESET` command or normal operation can be restored by resetting the Relay.

Appendix A Technical Specifications

A.1 Relay Specifications

PHYSICAL	
Size	290 x 275 x 80 mm
Weight	2 kg
Mounting	5 x magnetic mounts
	4 x M4 screw inserts
	Optional mounting plate
ENVIRONMENTAL	
Operating Temperature Base Station Rover	 -30°C to +60°C -30°C to +70°C
Storage Temperature	-40°C to +80°C
Humidity	MIL-STD-810G, Method 507.5 Procedure 2
Immersion	MIL-STD-810G, Method 512.5 Procedure 1
Salt Fog	MIL-STD-810G, Method 509.5
Sand and Dust	MIL-STD-810G, Method 510.5 Procedure 1
Solar Radiation	MIL-STD-810G, Method 505.5 Procedure 1 & 2
Acidic Atmosphere	MIL-STD-810G, Method 518.1
Vibration	MIL-STD-810G, Method 514.6, Category 24
Shock	MIL-STD-810G, Method 516.6
REGULATORY	
Compliance	FCC, Industry Canada, CE Marking, E-mark
POWER	
Input Voltage Range	+9 to +36 VDC
Maximum Power Consumption	UHF 400 MHz radio 10.5 W UHF 900 MHz radio 8.5 W CDMA radio 7.5 W HSPA radio 5.5 W
LED INDICATORS	
Power, Error and Position Valid	Refer to *Section 2.9.1, Status Indicators* on page 29 for details

INPUT/OUTPUT CONNECTORS	
COM and Power Port	14-pin Tyco Ampseal For the cable pin-outs and drawings, see *Section A.2, NovAtel Relay Interface Cable (01019382)* on page 67
Radio Antenna Connector CDMA, HSPA, 400 MHz radio 900 MHz radio	TNC female jack, 50 Ω nominal
SIM Card Slot	Push-push
14-PIN AMPSEAL SIGNALS	
Power	+9 to +36 VDC
Serial Com Ports	RS-232 F Compliant (receive and transmit signals only)
CAN	SAE J1939/ ISO 11783/ ISO 11898 Compatible
Emulated Radar Output	High = Supply Voltage -0.5 V Minimum Low = 0.5 V Maximum Load = 3K Ohm Minimum
PPS Output	3.3 V CMOS Logic Compatible
MKI Input	3.3 V CMOS Logic/5 V Tolerant
INPUT/ OUTPUT CONNECTOR PROTECTION	
Electrical Conducted/ Coupled disturbance tolerance	ISO 7637-2:2004 Functional Class A: Pulses 2a, 3a, 3b, 4 Functional Class C: Pulses 1, 2b
INPUT/OUTPUT DATA INTERFACE ***COM1 (pass through from SMART6-L)***	
Electrical format	RS-232
Bit rates (bps)	2400, 4800, 9600 (default), 19200, 38400, 57600, 115200, 230400 or 460800
Signals supported	TxD1, RxD1
Flow control	XON/XOFF
COM2 (pass through from SMART6-L)	
Electrical format	RS-232
Bit rates (bps)	2400, 4800, 9600 (default), 19200, 38400, 57600, 115200, 230400 or 460800
Signals supported	TxD2, RxD2
Flow control	XON/XOFF

COM3 is a radio service port and does not function as a standard NovAtel receiver COM port. The default baud rate for the radio service port is 115200.

Figure 20: Relay Dimensions

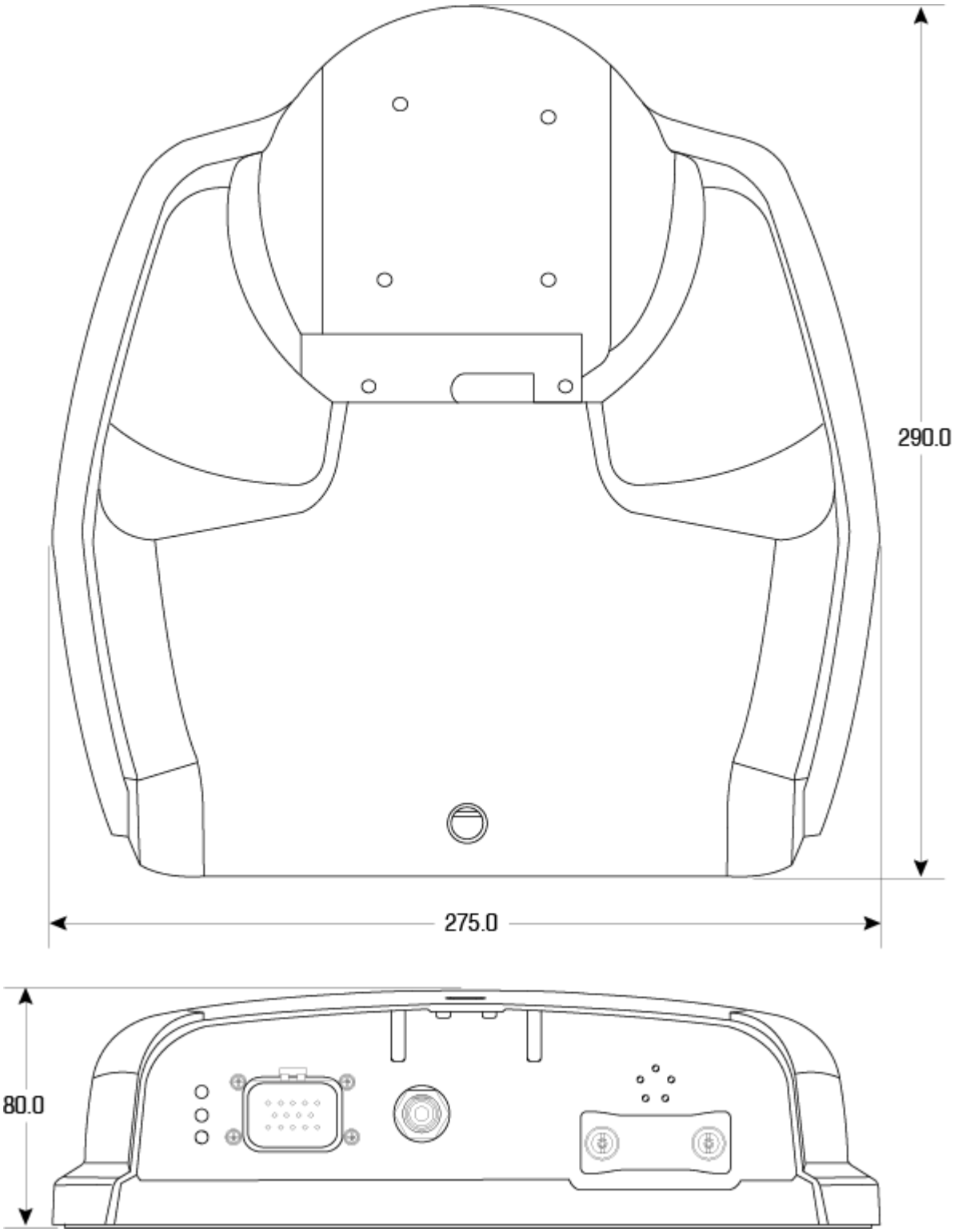

Dimensions are in millimeters

A.1.1 Relay Radio Specification

WI-FI RADIO (only on available UHF radio models in Base Station Configuration)	
Standards	802.11 b/g/n
Frequency Band	2.4 GHz
CDMA CELLULAR RADIO	
Frequency Band	800/1900 MHz
Air Interface	IS-95A/B and CDMA2000
Data Support	1xRTT / EVDO
Sensitivity	CDMA 1x: -108 dBm (typical)
HSPA CELLULAR RADIO	
Frequency Band	850, 900, 1800, 1900, AWS 1700, 2100 Depending on frequency band(s) provided by the network operator. Use the most suitable antenna for the band(s).
Bandwidth	70 MHz in GSM850, 80 MHz in GSM900, 170 MHz in DCS and 140 MHz PCS band
VSWR	Maximum <= 10:1 Recommended <= 2:1
Sensitivity	-107 dBm (typical)
Output Power	Class 4 (2 W) @ 850/900 MHz Class 1 (1 W) @ 1800/1900 MHz
400 MHZ RADIO	
Frequency Band	403 to 473 MHz
Transmit Power	1 W
Data Bandwidth	12.5 or 25 kHz
Receive Sensitivity	-113 dBm @ 25 kHz
Compatibility	Satelline 3AS, PacCrest (4FSK, GMSK and FST), TrimTalk 450s (P and T)
900 MHZ RADIO	
Frequency Band	902 to 928 MHz
Transmit Power	1 W
Receive Sensitivity	-108 dBm
Compatibility	Freewave MM2-T

A.2 NovAtel Relay Interface Cable (01019382)

The NovAtel Relay interface cable (refer to *Figure 21, NovAtel Relay Interface Cable (01019382)*), provides a means of supplying power to the Relay (and SMART6-L) and accessing the communication signals from the Relay (and SMART6-L).

The exposed wires (labeled BATT+ for positive and BATT- for negative) can be connected to a vehicular power circuit (or equivalent) protected by a 5 A fast blow fuse (user supplied).

The cable has three DB-9 connectors to accommodate a computer serial (RS-232) communication port for configuring and monitoring the Relay and the SMART6-L. The serial ports COM1 and COM2 provide communication with the SMART6-L and COM3 provides communication with the Relay.

In addition, there are a number of bare wires where the outer insulation is cut away but the wires beneath remain intact. See *Table 7, NovAtel Relay Interface Cable Pin-Outs* on page 68 for their pin-outs. For more information on mating connectors and part numbers, see *Table 8, Relay Mating Connectors* on page 69.

This cable is RoHS compliant.

Figure 21: NovAtel Relay Interface Cable (01019382)

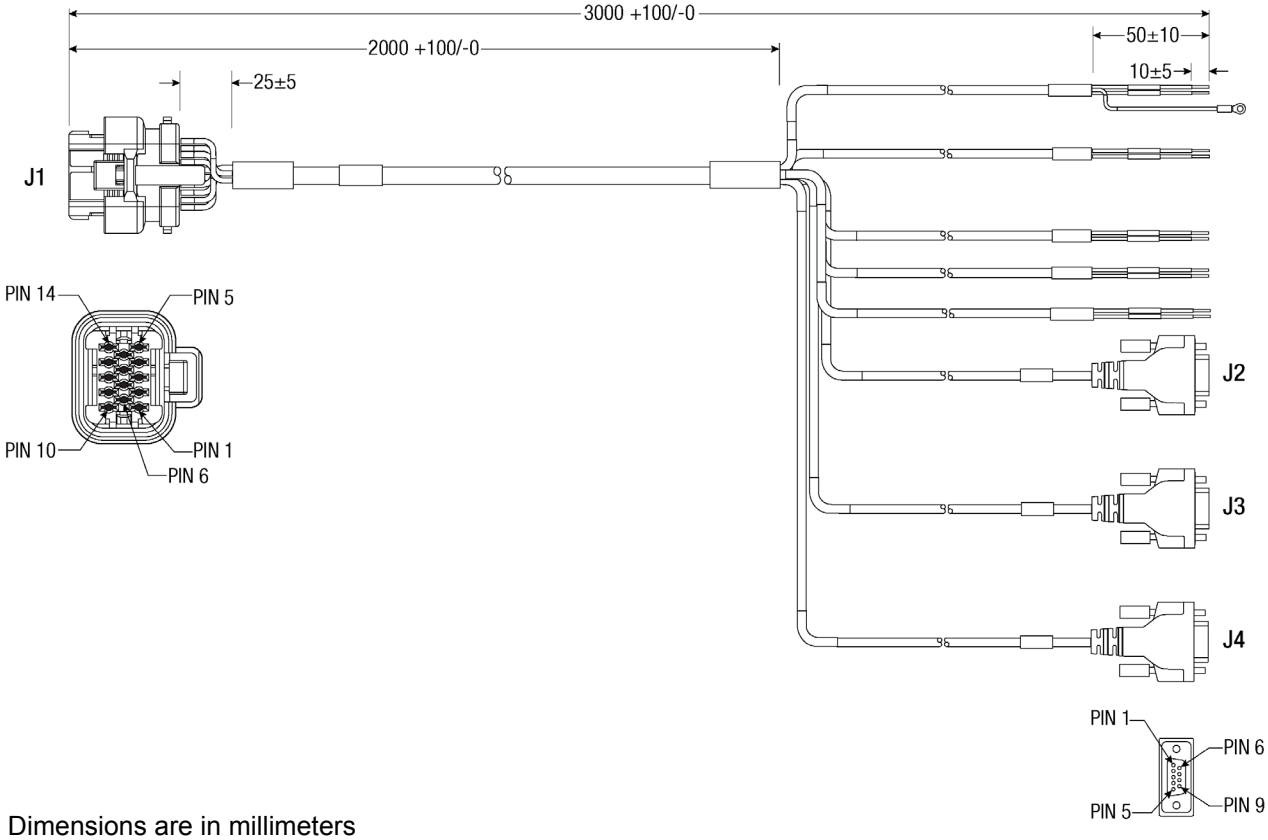

Dimensions are in millimeters

Table 7: NovAtel Relay Interface Cable Pin-Outs

Signal Name	J1 (14-pin)	J2 (COM1)	J3 (COM2)	J4 (COM3)	Wire Bundle Label
COM1 TXD	1	2			COM1
COM1 RXD	2	3			
COM2 TXD	3		2		COM2
COM2 RXD	4		3		
COM3 TXD	8			2	COM3
COM3 RXD	13			3	
COM1 GND	5	5			
COM2 GND			5		
COM3 GND				5	
COM1 SHLD		SHELL			
COM2 SHLD			SHELL		
COM3 SHLD				SHELL	
Event Mark In (MKI) GND					MKI GND
Emulated Radar GND					ER GND
Pulse Per Second GND					PPS GND
CAN+	6				CAN+
CAN-	7				CAN-
Power Return (GND)	9				BATT-
Emulated Radar Out	10				ER_OUT
Event Mark In (MKI)	11				MKI
Pulse Per Second Out	12				PPS
Power Input	14				BATT+

A.2.1 Relay Connector and Cable Requirements

Custom cables for installing the Relay can be created using the following guidelines:

- Minimum conductor size for all signal wiring is 0.8 mm/20 AWG
- Minimum conductor size for power wiring is 1.25 mm/16 AWG
- All wire insulation sizes in the Tyco 14-pin connector must conform to the manufacturer's recommendations for insulation diameter range (or watertight seal integrity will be compromised)
- Batt+ connection must be protected by 5 A fast blow fuse
- Serial data signals (TxD, RxD, signal ground) must be run in shielded cable. Connect shield to Pin 5 at Relay end and to serial connector shell at the user end
- CAN signal conductors must be twisted (40 twists/m, 12 twists/ft)
- Use only the recommended mating connectors listed below. Use only gold plated pins

Failure to observe the given cable construction guidelines and fusing requirements in this section may result in damage to the wiring or equipment and voiding the warranty.

NovAtel recommends biasing unused inputs to their default states.

The connector used in the Relay is an "AMPSEAL" dust and water sealed type produced by Tyco. The following part numbers pertain to the mating connector required to make connections to the Relay. These numbers are provided for information only and are not available from NovAtel as separate parts.

Table 8: Relay Mating Connectors

Product	Part Description	Company	Part Number
Relay mating connector (J1 - *Figure 21, NovAtel Relay Interface Cable (01019382)* on page 67)	14-pin sealed receptacle housing-black	Tyco/AMP	776273-1
Gold plated pins (20-16 AWG) for (J1) Relay connector Gold plated pins for Relay connector/strip	Pins, loose piece	Tyco/AMP	770854-3
	Pins, strip (reel)	Tyco/AMP	770520-3
Seal Plug for unused pins on mating connector. (All connector positions must be populated with a pin or seal plug to achieve the IP-67 rating for the cable connection.)	Seal plug	Tyco/AMP	770678-1

Table 9, Recommended Fuse and Fuse Holders details the part numbers for recommended fuses and fuse holders. These numbers are provided for information only and are not available from NovAtel as separate parts.

Table 9: Recommended Fuse and Fuse Holders

Fuse	Recommended Fuse/Fuse Holder		
12 V System Fuse (standard size blade)	ATO Silver Blade Fuse 5 A (32 V)	Littelfuse	0287005
	Or Equivalent		
12 V System Fuse (mini size blade)	Mini Blade Fuse 5 A (32 V)	Littelfuse	0297005
	Or Equivalent		
24 V System Fuse High Reliability, Harsh Environment (standard size blade)	FKS ATO Blade Fuse 5A (80 V)	Littelfuse	166.7000.450
	Or Equivalent		
In-line Fuse Holder, (for standard size blade)	Waterproof ATO Fuse Holder	Littelfuse	FHAC0001
	Or Equivalent		
Incline Fuse Holder, (for mini size blade)	Waterproof Mini Fuse Holder	Littelfuse	0FHM0001
	Or Equivalent		

A.3 Relay NMO to TNC Adapter Cable (01019372)

The Relay NMO to TNC Adapter cable (refer to *Figure 22, Relay NMO to TNC Adapter Cable*), connects the Relay to the external radio antenna. This cable is used when the radio antenna is mounted on the top of the Relay.

This cable is RoHS compliant.

Figure 22: Relay NMO to TNC Adapter Cable

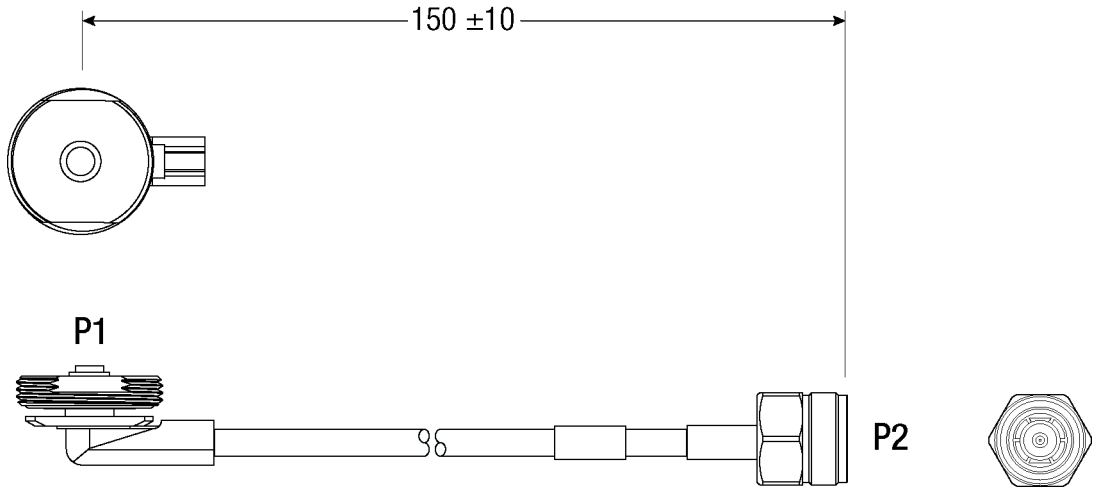

Dimensions are in millimeters

To avoid possible GNSS performance degradation, do not mount the antenna on the top of the Relay when the module is operated as a base station.

To ensure the overall antenna system gain complies with the radio specific FCC requirements, the NMO to TNC Adapter Cable is only used when approved by a professional installer for use in combination with a designated antenna.

Refer to *Cellular Radios* on page 10 for additional guidance.

Appendix B Commands

The SMART6-L firmware implements the OEM6 family command set. The majority of these commands are documented in the OEM6 Family Firmware Reference Manual (OM-20000129), while SMART6-L specific commands are documented in the SMART6-L User Manual. This appendix describes the Relay specific commands.

Commonly used Relay commands are summarized in *Table 10, Relay Commands* and documented in this appendix.

Table 10: Relay Commands

Command	Message ID	Description
CELLULARACTIVATE	1817	Activates the cellular subscription on the cellular network. For information see *Section B.2, CELLULARACTIVATE* on page 74.
CELLULARCONFIG	1683	Configures the cellular parameters. For information see the OEM6 Family Firmware Reference Manual (OM-2000129).
EPERSONALITY	9021	Configures Relay as Base or Rover. For information see *Section B.3, EPERSONALITY* on page 75.
ESOFTLOADCOMMIT	9025	Complete the ESoftLoad process. For information see *Section B.4, ESOFTLOADCOMMIT* on page 77.
ESOFTLOADDATA	9024	Uploads data for ESoftLoad. For information see *Section B.5, ESOFTLOADDATA* on page 78.
ESOFTLOADRESET	9022	Restarts the ESoftLoad process. For information see *Section B.6, ESOFTLOADRESET* on page 79.
ESOFTLOADSREC	9023	Sends S-Records to the Relay. For information see *Section B.7, ESOFTLOADSREC* on page 80.
FRESET	20	Resets the receiver to factory default. For information see the SMART6-L User Manual (OM-20000146).
M3TRCONFIG	9008	Configures the Satel M3 Radio For information see *Section B.8, M3TRCONFIG* on page 81.
M3TRMODE	9016	Sets the Satel M3 radio mode. For information see *Section B.9, M3TRMODE* on page 83.
MM2TCONFIG	9007	Configures the MM2-T radio. For information see *Section B.10, MM2TCONFIG* on page 84.
MM2TMODE	9015	Sets the MM2-T radio mode. For information see *Section B.11, MM2TMODE* on page 87.
RESET	18	Performs a hardware reset. For information see the OEM6 Family Firmware Reference Manual (OM-2000129).
WIFIAPCONFIG	1665	Configures the Wi-Fi Access Point. For information see *Section B.12, WIFIAPCONFIG* on page 88.
WIFICONFIG	1617	Configures tunneling between Relay serial functions. For information see *Section B.14, WIFICONFIG* on page 91.

Command	Message ID	Description
`WIFIAPCONTROL`	9017	Controls the Wi-Fi Access Point (AP). For information see *Section B.13, WIFIAPCONTROL* on page 90.

For a complete listing and description of the other commands that the SMART6-L, an OEM6 based receiver, is capable of processing, refer to the OEM6 Family Firmware Reference Manual (OM-20000129) and the SMART6-L User Manual (OM-20000146).

B.1 SYNTAX CONVENTIONS

The following rules apply when entering commands, at the command prompt, from a keyboard.

1. `Courier` font is used to illustrate program output or user input.
2. References to other commands, logs or any of their fields are shown in *italics*.
3. The commands are not case sensitive. For example, you could type either `RESET` or `reset`.
4. Except where noted, either a space or a comma can separate commands and their required entries. For example, you could type either `fix position 51.11358042 -114.04358013 1059.4105` or `fix,position,51.11358042,-114.04358013,1059.4105`.
5. At the end of a command, a carriage return is required. For example, press <Enter> or <Return> on your keyboard.
6. Responses are provided to indicate whether or not an entered command was accepted. The format of the response depends on the format of the command. Refer to the OEM6 Family Firmware Reference Manual (OM-20000129) for more information.
7. Optional parameters are indicated by square brackets (`[ ]`). For commands that contain optional parameters, the value used if the optional parameter is not specified is given in the syntax table for the command.
8. Data format definitions, as specified in the “Format” field, are detailed in the OEM6 Family Firmware Reference Manual (OM-20000129). Note that all binary data is little-endian byte-ordered.

B.2 CELLULARACTIVATE

Activate cellular subscription

The `CELLULARACTIVATE` command activates the cellular subscription on the CDMA network. The `CELLULARACTIVATE` command needs to be sent once to activate the subscription. It may take a few minutes to complete activation. Consult the CELLULARACTIVATESTATUS log to review progress.

> This command is intended for use only on Relays equipped with a CDMA radio.

Message ID: 1817

Abbreviated ASCII Syntax:

```
CELLULARACTIVATE operator
```

Input Example:

```
cellularactivate verizon
```

Field	Field Type	ASCII Value	Binary Value	Description	Binary Format	Binary Bytes	Binary Offset
1	CELLULARACTIVATE header	-	-	This field contains the command name or the message header depending on whether the command is abbreviated ASCII, ASCII or binary.	-	H	0
2	operator	See *Table 11, Supported Operators*		The operator or network on which the CDMA modem is activated.	String	32	H
3	Reserved				String	32	H+32
4	Reserved				Int	4	H+64

Table 11: Supported Operators

No	Value
1	Verizon

B.3 EPERSONALITY

Configure Relay personality

The `EPERSONALITY` command is used to configure the personality traits of the Relay.

> The Relay must be reset for the changes made by this command to take effect.

Message ID: 9021

Abbreviated ASCII Syntax:

```
EPERSONALITY [traits]
```

Input Example:

```
epersonality r
```

Field	Field Type	ASCII Value	Binary Value	Description	Binary Format	Binary Bytes	Binary Offset
1	EPERSONALITY header	-	-	This field contains the command name or the message header depending on whether the command is abbreviated ASCII, ASCII or binary, respectively.	-	H	0
2	Traits	See *Table 12, Trait Values*		String identifying the configurable personality traits. Each character in the string represents one personality trait. The string is treated as a left-justified string. Characters that are not specified are treated as spaces. Spaces cause the corresponding trait to be set to the default value as listed below. Traits are not case sensitive. If no Traits parameter is specified, the Relay is configured as a Rover.	String [32]	variable	H

Table 12: Trait Values

Index	Trait Name	Description
0	RTK Role	Identifies the receiver as either a Base or Rover. r or R = Rover (default) b or B = Base A Relay equipped with a cellular modem cannot be configured as a base.
1-31	Reserved for future use.	

> If the MMODE of the Freewave 900 MHz radio is set to 2 or 3,
>
> - an EPERSONALITY B command sets the receiver to Base (MMODE = 2)
> - an EPERSONALITY R command sets the receiver to Rover (MMODE = 3)
>
> If the MMODE is set a value other than 2 or 3, the EPERSONALITY command does not change the MMODE.

To check the current MMODE of the Freewave 900 MHz radio, enter the following commands:

```
LOG MM2TINFO ONNEW
MM2TMODE PROG
MM2TCONFIG LOG MMODE
MM2TMODE NORMAL
```

B.4 ESOFTLOADCOMMIT

Complete the ESoftLoad process

The `ESOFTLOADCOMMIT` command completes the ESoftLoad process by verifying the downloaded image and activating it.

This command can only be sent to the receiver when the ESOFTLOADSTATUS log reports READY_FOR_DATA.

After issuing the `ESOFTLOADCOMMIT` command, the user must wait for the OK or ERROR command response before proceeding. This response is guaranteed to be output from the receiver within 300 seconds from the time the command was received by the receiver. If an error response is returned, consult the ESOFTLOADSTATUS log on page 95 for more detail.

Message ID: 9025

Abbreviated ASCII Syntax:

`ESOFTLOADCOMMIT`

Input Example:

```
esoftloadcommit
```

Field	Field Type	ASCII Value	Binary Value	Description	Binary Format	Binary Bytes	Binary Offset
1	ESOFTLOADCOMMIT header	-	-	This field contains the command name or the message header depending on whether the command is abbreviated ASCII, ASCII or binary, respectively	-	H	0
2	Reserved	-	1	Reserved. Set to 1 in the binary case.	Enum	4	H

B.5 ESOFTLOADDATA

Uploads data for ESoftLoad

The `ESOFTLOADDATA` command is only valid in binary mode. This command is used to upload data to the Relay for the ESoftLoad process.

After each `ESOFTLOADDATA` command, the user must wait for the OK or ERROR command response before proceeding. This response is guaranteed to be output within 15 seconds from the time the command was received. If an error response is returned, consult the ESOFTLOADSTATUS log on page 95 for more detail.

This command can only be sent to the receiver once the `ESOFTLOADSREC` command is sent with the content of the S0 records from the start of a firmware *.hex file. In these cases, the ESOFTLOADSTATUS log reports READY_FOR_SETUP or READY_FOR_DATA.

Message ID: 9024

Abbreviated ASCII Syntax:

N/A

Input Example:

N/A

Field	Field Type	Binary Value	Description	Binary Format	Binary Bytes	Binary Offset
1	ESOFTLOADDATA header	-	NovAtel binary message header.	-	H	0
2	offset	-	Offset of the data within the downloaded image.	Ulong	4	H
3	data length	-	Number of bytes of data. This must match the number of bytes contained within the "data" field.	Ulong	4	H+4
4	data	-	Incoming data up to a maximum of 4096 bytes.	Ulong	492	H+8

B.6 ESOFTLOADRESET

Restarts ESoftLoad process

The `ESOFTLOADRESET` command restarts the ESoftLoad process. The command does not affect the flash and does not reset the receiver.

The `ESOFTLOADRESET` command can be issued at any time. If it is issued while an ESoftLoad process is currently in progress then that process is terminated and a new one is started. After the `ESOFTLOADRESET` command is processed, the ESOFTLOADSTATUS log will report a status of READY_FOR_SETUP.

After issuing the `ESOFTLOADRESET` command, the user must wait for the OK or ERROR command response before proceeding. This response is guaranteed to be output from the receiver within 300 seconds from the time the command was received by the receiver. If an error response is returned, consult the ESOFTLOADSTATUS log on page 95 for more detail.

Message ID: 9022

Abbreviated ASCII Syntax:

`ESOFTLOADRESET`

Input Example:

```
esoftloadreset
```

Field	Field Type	ASCII Value	Binary Value	Description	Binary Format	Binary Bytes	Binary Offset
1	ESOFTLOADRESET header	-	-	This field contains the command name or the message header depending on whether the command is abbreviated ASCII, ASCII or binary, respectively.	-	H	0
2	Reserved	-	1	Reserved. Set to 1 in the binary case.	Enum	4	H

B.7 ESOFTLOADSREC

Sends S-Records to the Relay

The `ESOFTLOADSREC` command is used to send S-Records to the Relay.

After each `ESOFTLOADSREC` command, the user must wait for the OK or ERROR command response before proceeding. This response is guaranteed to be output from the receiver within 15 seconds from the time the command was received by the receiver. If an error response is returned, consult the ESOFTLOADSTATUS log on page 95 for more detail.

This command can only be sent to the receiver when the ESOFTLOADSTATUS log reports READY_FOR_SETUP or READY_FOR_DATA.

Message ID: 9023

Abbreviated ASCII Syntax:

```
ESOFTLOADSREC s-record
```

Input Example:

```
esoftloadsrec s30900283c10faa9f000ef
```

Field	Field Type	ASCII Value	Binary Value	Description	Binary Format	Binary Bytes	Binary Offset
1	ESOFTLOADSREC header	-	-	This field contains the command name or the message header depending on whether the command is abbreviated ASCII, ASCII or binary, respectively.	-	H	0
2	SREC	-		ASCII S-Record string copied from firmware *.hex.	String [515]	variable[a]	H
3	Reserved	-	1	Reserved. Set to 1 in the binary case.	Ulong	4	variable

a. In the binary case, each string field needs to be NULL terminated and additional bytes of padding added to maintain 4-byte alignment, up to the maximum defined by the string size. The next defined field starts immediately at the next 4-byte alignment following the NULL.

B.8 M3TRCONFIG

Configures the Satel M3-TR3 radio

The `M3TRCONFIG` command is used to configure the Satel M3-TR3 radio.

> Before using this command to set the radio parameters, the radio must be set to programming mode using the `M3TRMODE` command. See *M3TRMODE* on page 83.
>
> Refer to the Satel radio documentation for information about the correct operation of the radio.

> The settings in this command are stored directly on the radio and are not saved using the `SAVECONFIG` command.
> Use the `m3trconfig save` command to save the settings made using this command.

> Adjustments to radio settings which may affect regulatory compliance and personal safety must be made only by qualified professional installers. Critical settings include transmit frequencies, transmit power levels, frequency zones and hop table parameters. Refer to the specific radios in the *Cellular Radios* on page 10 and *UHF Radios* on page 11 in the Notices chapter on *page 7* as well as the radio manuals for additional information.

Message ID: 9008

Abbreviated ASCII Syntax:

`M3TRCONFIG name value`

Input Example:

`m3trmode prog`	Enters programming state
`m3trconfig freqrx 438.000`	Sets the receiving frequency to 438.000 MHz
`m3trconfig spacing 1250`	Sets the channel spacing to 1250 kHz
`m3trconfig save`	Saves the current settings
`m3trmode normal`	Enters normal operating state

Field	Field Type	ASCII Value	Binary Value	Description	Binary Format	Binary Bytes	Binary Offset
1	M3TRCONFIG header	-	-	This field contains the command name or the message header depending on whether the command is abbreviated ASCII, ASCII or binary.	-	H	0
2	name	See *Table 13, M3TRCONFIG Parameters* on page 82		The name of the radio setting to modify.	String[32]	variable[a]	H
3	value	See *Table 13, M3TRCONFIG Parameters* on page 82		The value to assign to the setting.	String[32]	variable[a]	variable

a. In the binary case, each string field needs to be NULL terminated and additional bytes of padding added to maintain 4-byte alignment, up to the maximum defined by the string size. The next defined field starts immediately at the next 4-byte alignment following the NULL.

Table 13: M3TRCONFIG Parameters

Name	Description	Values
compat	Compatibility mode	See *Table 14, Compatibility Mode*
freqtx	Transmit frequency, MHz	Range (403-473) Factory restore value: 438.000
freqrx	Receive frequency, MHz	Range (403-473) Factory restore value: 438.000
spacing	Channel spacing, kHz	1250 or 2500 Factory restore value: 1250
txpwr	Maximum transmit power, mW	100, 200, 500, 1000 Factory restore value: 1000
fec	Forward error correction	0 (OFF) or 1 (ON) Factory restore value: 0
err_check	Error check	See *Table 15, Error Check Mode* Factory restore value: OFF
log	Trigger output of an M3TRINFO log with the named parameter	Name of an M3TRINFO parameter A value of 'all' will output all settings
save	Save current settings as permanent settings	N/A
restorefactory	Restore settings to their factory set values	N/A

Table 14: Compatibility Mode

Value	Mode
0	Satelline-3AS
1	PacCrest-4FSK
2	PacCrest-GMSK
3	Trimtalk450s(P)
4	Trimtalk450s(T)
5	PacCrest-FST

Table 15: Error Check Mode

Value	Mode
0	OFF
1	CRC8Partial
2	CRC8Full
3	CRC16Full

B.9 M3TRMODE

Sets the Satel M3-TR3 radio mode

The `M3TRMODE` command sets the Satel M3-TR3 radio mode.

The radio mode determines how the radio interacts with the receiver. The radio must be placed into programming mode to change the settings using the `M3TRCONFIG` command.

> The `M3TRMODE` setting is saved using the `SAVECONFIG` command and reset using the `FRESET` command.

Message ID: 9016

Abbreviated ASCII Syntax:

```
M3TRMODE mode
```

Input Example:

`m3trmode prog`	Enters programming state
`m3trmode normal`	Leaves programming state; enables normal operation

Field	Field Type	ASCII Value	Binary Value	Description	Binary Format	Binary Bytes	Binary Offset
1	M3TRMODE header	-	-	This field contains the command name or the message header depending on whether the command is abbreviated ASCII, ASCII or binary.	-	H	0
2	mode	See *Table 16, Satel M3-TR3 Modes*		The mode to which the M3-TR3 radio will be set.	String[32]	variable[a]	H

a. In the binary case, each string field needs to be NULL terminated and additional bytes of padding added to maintain 4-byte alignment, up to the maximum defined by the string size. The next defined field starts immediately at the next 4-byte alignment following the NULL.

Table 16: Satel M3-TR3 Modes

Mode	Description
off	Power off the radio. The radio is disconnected from the receiver
prog	Set the radio to programming mode. The radio is disconnected from the receiver.
normal	The radio is enabled and connected to the receiver.

B.10 MM2TCONFIG

Configure the Freewave MM2-T radio

The `MM2TCONFIG` command is used to configure the Freewave MM2-T radio.

> Before using this command to set the radio parameters, the radio must be set to programming mode using the `MM2TMODE` command. See *MM2TMODE* on page 87.
>
> Refer to the Freewave radio documentation for information about the correct operation of the radio.

> The settings in this command are stored directly on the radio and are not saved using the `SAVECONFIG` command.

> To ensure the overall antenna system gain complies with the radio specific FCC requirements, the TNC Accessory Cable is only used when approved by a professional installer for use in combination with a designated antenna.
>
> Refer to *Cellular Radios* on page 10 for additional guidance.

Message ID: 9007

Abbreviated ASCII Syntax:

`MM2TCONFIG name value`

Input Example:

`mm2tmode prog`	Enters programming state
`mm2tconfig freq 1`	Sets the frequency key to 1
`mm2tconfig nid 0001`	Sets the network ID to 1
`mm2tmode normal`	Enters normal operating state

Field	Field Type	ASCII Value	Binary Value	Description	Binary Format	Binary Bytes	Binary Offset
1	MM2TCONFIG header	-	-	This field contains the command name or the message header depending on whether the command is abbreviated ASCII, ASCII or binary.	-	H	0
2	name	See *Table 17, MM2TCONFIG Parameters* on page 85		The name of the radio setting to modify.	String[32]	variable[a]	H
3	value	See *Table 17, MM2TCONFIG Parameters* on page 85		The value to assign to the setting.	String[32]	variable[a]	variable

a. In the binary case, each string field needs to be NULL terminated and additional bytes of padding added to maintain 4-byte alignment, up to the maximum defined by the string size. The next defined field starts immediately at the next 4-byte alignment following the NULL.

Table 17: MM2TCONFIG Parameters

Name	Description	Values
channel	Virtual channel	1 - 3824 The virtual channel is translated to a 'Frequency Key' and 'Network Id' using a proprietary formula. Use of this parameter is mutually exclusive with the 'freq' and 'nid' parameters. Do not set the 'freq' and 'nid' parameters when the Virtual channel parameter is used.
freq	Frequency key	0 to 9 and A to E The hex values A to E must be entered in upper case. Specifying this parameter overrides any settings made using the Virtual channel command. See the Freewave MM2-T user documentation.
hoptablever	Hop table version	See the Multipoint Parameters section of the Freewave MM2-T user documentation.
hoptablesize	Hop table size	See the Multipoint Parameters section of the Freewave MM2-T user documentation.
freqzone	Frequency zone	See the Multipoint Parameters section of the Freewave MM2-T user documentation. The value is a 16-digit sequence, where the position of each digit represents the index of the zone. E.g. "0000111111111111": Zones 0 - 3 are disabled, Zones 4-15 are enabled.
nid	Network ID	0001 to 0255 See the Multipoint Parameters section of the Freewave MM2-T user documentation. Must be provided as a 4-digit entry (for example, 0021) Specifying this parameter overrides any settings made using the Virtual channel command.
snid	Sub network ID	See the Multipoint Parameters section of the Freewave MM2-T user documentation. The format is "RT", where: R = receive subnet ID, T = transmit subnet ID. The only values supported on the Relay: "00": Rx = 0, Tx= 0 ("Roaming") "ff": Rx = f, Tx = f ("Disabled")
txpwr	Transmit power	See *Table 18, Transmit Power* on page 86
mmode	Modem mode	Select the modem mode that is compatible with your radio network. See *Table 19, Modem Mode* on page 86 for the available modes. See the Operational Mode or Modem Mode sections of the Freewave MM2-T user documentation for information about the modem modes. Typically, mode 2 is used for a base station and mode 3 is used for a rover.
radioid	Radio ID	See the Multipoint Parameters section of the Freewave MM2-T user documentation. The maximum value accepted by the radio is 4095.
radioname	Radio name	See the Multipoint Parameters section of the Freewave MM2-T user documentation.
minpkt	Minimum packet size	See the Radio Transmission Characteristics section of the Freewave MM2-T user documentation.

Name	Description	Values
maxpkt	Maximum packet size	See the Radio Transmission Characteristics section of the Freewave MM2-T user documentation.
rfdatarate	RF data rate	See the Radio Transmission Characteristics section of the Freewave MM2-T user documentation.
fwversion	Firmware version	See the Freewave MM2-T user documentation.
modelcode	Model code	See the Freewave MM2-T user documentation.
log	Trigger output of an MM2TINFO log	Name of an MM2TINFO parameter. A value of 'all' will output all settings

Table 18: Transmit Power

Value	Level, mW
0	5
1	10
2	35
3	80
4	140
5	230
6	330
7	480
8	600
9	800
10	1000
255	Reserved

Table 19: Modem Mode

Value	Description
0	Point-to-Point Master
1	Point-to-Point Slave
2	Point-to-MultiPoint Master
3	Point-to-MultiPoint Slave
4	Point-to-Point Slave/Repeater
5	Point-to-Point Repeater
6	Point-to-Point Slave/Master Switchable
7	Point-to-MultiPoint Repeater

B.11 MM2TMODE

Sets the Freewave MM2-T radio mode

The `MM2TMODE` command sets the Freewave MM2-T radio mode.

The radio mode determines how the radio interacts with the receiver. The radio must be placed into programming mode to change the settings using the `MM2TCONFIG` command.

> The `MM2TMODE` setting is saved using the `SAVECONFIG` command and reset using the `FRESET` command.

Message ID: 9015

Abbreviated ASCII Syntax:

```
MM2TMODE mode
```

Input Example:

```
mm2tmode prog
mm2tmode normal
```

Field	Field Type	ASCII Value	Binary Value	Description	Binary Format	Binary Bytes	Binary Offset
1	MM2TMODE header	-	-	This field contains the command name or the message header depending on whether the command is abbreviated ASCII, ASCII or binary.	-	H	0
2	mode	See *Table 20, MM2-T Modes*		The mode to which the MM2-T radio is set. Default: off	String[32]	variable[a]	H

a. In the binary case, each string field needs to be NULL terminated and additional bytes of padding added to maintain 4-byte alignment, up to the maximum defined by the string size. The next defined field starts immediately at the next 4-byte alignment following the NULL.

Table 20: MM2-T Modes

Mode	Description
off	Power off the radio. The radio is disconnected from the receiver.
prog	Set the radio to programming mode. The radio is disconnected from the receiver.
normal	The radio is enabled and connected to the receiver.

B.12 WIFIAPCONFIG

Wi-Fi Access Point (AP) Configuration

This command configures the Wi-Fi Access Points (AP), which are used when the Wi-Fi radio is configured for use as an AP. Up to four APs can be configured and saved using the `SAVECONFIG` command. There is no default configuration data after a factory reset. The network parameters for an AP must always be statically set.

> The `DHCPCONFIG` command cannot be used to set network parameters for an AP.

> In order for Wi-Fi changes to take effect, issue the `WIFIAPCONTROL POWERCYCLE` command to restart the access point.

Message ID: 1665

Abbreviated ASCII Syntax:

```
WIFIAPCONFIG [WifiApId] WifiApConfiguration value
```

ASCII Example:

```
wifiapconfig 1 ssid "myssid"
```

> This command must be entered in ASCII or Abbreviated ASCII.

Field	Field Type	ASCII Value	Binary Value	Description	Format	Binary Bytes	Binary Offset
1	WIFIAPCONFIG header	-	-	Command header		H	0
2	Wifiapid	See *Table 21, WifiApId*		ID of AP configuration Default = 1 (WIFIAPID_1)	Enum	4	H
3	Wifiapconfiguration	*Table 22, WIFIAPConfiguration* on page 89		Configuration parameter for the network	Enum	4	H+4
4	Value	*Table 22, WIFIAPConfiguration* on page 89		Configuration parameter value	String	65[a]	H+8

a. In the binary case, each string field needs to be NULL terminated and additional bytes of padding added to maintain 4-byte alignment, up to the maximum defined by the string size. The next defined field starts immediately at the next 4-byte alignment following the NULL.

Table 21: WifiApId

Binary	ASCII	Description
1	1	AP 1
2	2	AP 2
3	3	AP 3
4	4	AP 4

Table 22: WIFIAPConfiguration

Binary	ASCII	Description
1	SSID	Wi-Fi SSID
2	ISHIDDEN	TRUE when the SSID is not broadcast
3	CHANNEL	802.11 Channel ID to use Valid range: 1 to 14
4	BEACON_INTERVAL	Beacon interval (milliseconds)
5	AUTHENTICATION	Authentication type: WPA2_PSK
6	ENCRYPTION	Encryption protocol: AES_CCMP
7	PASSPHRASE	WPA/WPA2 passphrase (63 ASCII characters), or Hex key (32 bytes - 64 ASCII characters)
8-12	Reserved	
13	PROTOCOL	802.11 standard: bgn

B.13 WIFIAPCONTROL

Controls the Wi-Fi Access Point (AP)

Use the `WIFILAPCONTROL` command to power restart the Relay Wi-Fi AP.

> The `WIFIAPCONTROL` command cannot be saved with `SAVECONFIG` command.

Message ID: 9017

Abbreviated ASCII Syntax:

`WIFIAPCONTROL cmd`

ASCII Example:

```
wifiapcontrol powercycle
```

Field	Field Type	ASCII Value	Binary Value	Description	Format	Binary Bytes	Binary Offset
1	WIFIAPCONTROL header	-	-	Command header	-	H	0
2	cmd	powercycle		The Relay supports a single command, `POWERCYCLE`, that restarts the Wi-Fi AP.	String	32[a]	H

a. In the binary case, each string field needs to be NULL terminated and additional bytes of padding added to maintain 4-byte alignment, up to the maximum defined by the string size. The next defined field starts immediately at the next 4-byte alignment following the NULL.

B.14 WIFICONFIG

Configure the Wi-Fi radio power and operating mode

Use this command to configure the power and operating mode of the Wi-Fi radio. On the Relay, the Wi-Fi radio only operates in Access Point (AP) mode. The AP settings are configured using the `WIFIAPCONFIG` command (see *WIFIAPCONFIG* on page 88).

> The command can be saved using the `SAVECONFIG` command.

> For Relay models containing UHF radios, the default sets the Wi-Fi radio to AP mode enabled. Disabling Wi-Fi will result in a loss of access to the Web User Interface.

Message ID: 1617

Abbreviated ASCII Syntax:

```
WIFICONFIG wificonfiguration parameter1 [parameter2]
```

Factory Default:

```
wificonfig mode ap
wificonfig state enabled
```

ASCII Examples:

`wificonfig mode ap`	Configures the receiver as an AP with the default profile (1)
`wificonfig mode ap 2`	Configures the receiver as an AP with AP profile 2
`wificonfig state enabled`	Enables Wi-Fi as an AP (since the mode is set to AP)
`wificonfig state off`	Completely powers off 802.11 chip

Field	Field Type	Description	Binary Format	Binary Bytes	Binary Offset
1	WIFICONFIG header	Command header.	-	H	0
2	WifiConfiguration	Configuration item, refer to *Table 23, Wi-Fi Configuration* on page 92	Enum	4	H
3	parameter1	Parameter 1 value, refer to *Table 24, Parameter1 Values (ASCII only)* on page 92	String	32[a]	variable
4	parameter2	Parameter 2 value, refer to *Table 25, Parameter2 Values (ASCII only)* on page 92	String	32[a]	variable

a. In the binary case, each string field needs to be NULL terminated and additional bytes of padding added to maintain 4-byte alignment, up to the maximum defined by the string size. The next defined field starts immediately at the next 4-byte alignment following the NULL.

Table 23: Wi-Fi Configuration

Binary	ASCII	Description
1	MODE	Set the operating mode of the Wi-Fi Radio
2	STATE	Set the state of the AP. Refer to *Table 24, Parameter1 Values (ASCII only).*

Table 24: Parameter1 Values (ASCII only)

Parameter 1 String	Applicability	Description
AP	MODE	Wi-Fi as 802.11 Infrastructure Access Point
ENABLED	STATE	MODE is enabled, RF active
OFF	STATE	MODE is disabled, RF inactive, 802.11 HW powered off

Table 25: Parameter2 Values (ASCII only)

Parameter 2 String	Applicability	Description
1, 2, ...4	WIFICONG MODE AP	Selects Access Points Profile (see `WIFIAPCONFIG` command) to be activated using STATE

Appendix C Logs

The SMART6-L firmware generates the OEM6 Family log set. The majority of the OEM6 Family logs are documented in the OEM6 Family Firmware Reference Manual (OM-20000129), while SMART6-L specific logs are documented in the SMART6-L User Manual. This appendix describes the Relay specific logs.

Commonly used Relay logs are summarized in *Table 26, Relay Logs*.

Table 26: Relay Logs

Log	Message ID	Description
`cellularactivatestatus`	1818	CDMA activation status/progress message For information see *Section C.1, CELLULARACTIVATESTATUS* on page 94.
`cellularinfo`	1686	Cellular modem and network information For information see the OEM6 Family Firmware Reference Manual (OM-2000129).
`cellularstatus`	1685	Cellular modem and network status information For information see the OEM6 Family Firmware Reference Manual (OM-2000129).
`esoftloadstatus`	9027	Status of the ESoftLoad process For more information see *Section C.2, ESOFTLOADSTATUS* on page 95.
`m3trinfo`	9012	Satel M3 radio configuration information For information see *Section C.3, M3TRINFO* on page 97.
`mm2tinfo`	9011	Freewave MM2-T radio configuration information For information see *Section C.4, MM2TINFO* on page 99.
`ntripstatus`	1820	NTRIP diagnostic information For information see *Section C.5, NTRIPSTATUS* on page 101.
`version`	37	Hardware and software versions and serial numbers For information see *Section C.6, VERSION* on page 103.
`wifiapstatus`	1666	Wi-Fi AP status For information see the OEM6 Family Firmware Reference Manual (OM-2000129).

C.1 CELLULARACTIVATESTATUS

CDMA activation status/progress message

The CELLULARACTIVATESTATUS log reports the CDMA activation status and progress message.

> The content of the messages in this log are specific the CDMA network operator.

Message ID: **1818**

Log Type: **Async**

Recommended Input:

```
log cellularactivatestatus onchanged
```

ASCII Example:

```
#cellularactivatestatusa,com2,0,71.0,finesteering,1810,503258.355,
00440000,1518,32768;"begin","","*a15fdef2

#cellularactivatestatusa,com2,0,76.5,finesteering,1810,503258.604,
00040000,1518,32768;"start otasp","","*a45040a2

#cellularactivatestatusa,com2,0,73.0,finesteering,1810,503272.396,
00040000,1518,32768;"start otasp commit","","*1f4a9b58

#cellularactivatestatusa,com2,0,75.5,finesteering,1810,503272.635,
00040000,1518,32768;"end otasp","","*8ec1054c
```

Field	Field type	Data Description	Format	Binary Bytes	Binary Offset
1	CELLULARACTIVATE STATUS header	Log header	-	H	0
2	status	Activation status The status can be reported using a #OTASP: <n> message.	String[64]	variable	H
3	error	Error message (optional) The error can be any diagnostic message available from the modem (for example, AT+CEER contents)	String[128]	variable	variable
4	reserved		String[64]	variable	variable
5	xxxx	32-bit CRC (ASCII and binary only).	Ulong	4	variable
6	[CR][LF]	Sentence terminator (ASCII only).	-	-	-

> The sequence and interpretation of parameters is operator specific. Translation could be done per AT command spec for a particular operator. For example:
> 0 ⟶ "Origination"
> 1 ⟶ "Start Commit"
> 2 ⟶ "End Commit"
> 3 ⟶ "Failed"

C.2 ESOFTLOADSTATUS

Describes the status of the ESoftLoad process

This log describes the status of the ESoftLoad process.

Message ID: **9027**

Log Type: **Async**

Recommended Input:

```
log esoftloadstatusa onchanged
```

ASCII Example:

```
#esoftloadstatusa,com1,0,97.5,unknown,0,0.113,004c0001,2d64,10481;
not_started*827fdc04
```

Field	Field type	Data Description	Format	Binary Bytes	Binary Offset
1	ESOFTLOADSTATUS header	Log header.	-	H	0
2	status	Status of the ESoftLoad process. See *Table 27, ESoftLoad Statuses*.	Enum	4	H
3	xxxx	32-bit CRC (ASCII and binary only).	Ulong	4	H+4
4	[CR][LF]	Sentence terminator (ASCII only).	-	-	-

Table 27: ESoftLoad Statuses

Value	Name	Description
1	NOT_STARTED	ESoftLoad process has not begun
2	READY_FOR_SETUP	ESoftLoad process is ready to receive setup information in the form of `ESOFTLOADSREC` commands with S0 records. Once sufficient setup data has been sent, the process is also ready for `ESOFTLOADDATA` commands.
3	READY_FOR_DATA	ESoftLoad process is ready to receive data in the form of `ESOFTLOADDATA` commands or `ESOFTLOADSREC` commands with S3 records. Once all data has been sent, send the `ESOFTLOADCOMMIT` command.
4	DATA_VERIFIED	ESoftLoad data has passed CRC. This status occurs after a `ESOFTLOADCOMMIT` command.
5	WRITING_FLASH	ESoftLoad data is being written to flash. This status occurs after a `ESOFTLOADCOMMIT` command. During a firmware upload, the receiver may remain in this state for a maximum of 300 seconds.
6	WROTE_FLASH	ESoftLoad data has been written to flash.
8	COMPLETE	ESoftLoad process has completed. The next step is to send the `RESET` command to reset the receiver.
9	VERIFYING_DATA	ESoftLoad is verifying the downloaded image.
11	WROTE_TRANSACTION_TABLE	The downloaded firmware has been activated and will be executed if the receiver is reset. This status is effectively the identical to COMPLETE.

Value	Name	Description
16	ERROR	Indicates an internal error in the ESoftLoad process. This error is not expected to occur. Contact NovAtel Customer Support for assistance.
17	RESET_ERROR	Error reseting ESoftLoad. Reset the receiver and restart the ESoftLoad process.
18	BAD_SRECORD	A bad S Record was received. Ensure that S Records are enclosed in double quotes within the `ESOFTLOADSREC` command.
19	BAD_PLATFORM	This data cannot be loaded onto this platform. Ensure that the correct *.hex file for the platform is being used.
20	BAD_MODULE	This module cannot be loaded with ESoftLoad. This file must be loaded using WinLoad or a similar loader.
23	NO_MODULE	No data type was entered before a `ESOFTLOADDATA` command was received. Set the data type using the `ESOFTLOADSREC` command with an "S0~T~" S Record.
24	NO_PLATFORM	No platform was entered before a `ESOFTLOADDATA` command was received. Set the platform using the `ESOFTLOADSREC` command with an "S0~P~" S Record.
25	NOT_READY_FOR_DATA	A `ESOFTLOADDATA` command was received but the receiver was not ready for it.
26	MODULE_MISMATCH	The ESoftLoad data module was changed in the middle of loading. Restart the ESoftLoad process using the `ESOFTLOADRESET` command.
27	OUT_OF_MEMORY	ESoftLoad has run out of RAM to store the incoming data. Reset the receiver and restart the ESoftLoad process.
28	DATA_OVERLAP	ESoftLoad data has overlapped. Ensure that the correct address and length is set in the `ESOFTLOADDATA` or `ESOFTLOADSREC` command.
29	BAD_IMAGE_CRC	CRC of the downloaded image has failed. Ensure that all content from the *.hex file has been successfully downloaded.
30	IMAGE_OVERSIZE	The downloaded image is too big for the intended data module.
32	BAD_FLASH_ERASE	Erasing of the flash failed. This could indicate a failure in the flash hardware.
33	BAD_FLASH_WRITE	Writing to the flash failed. This could indicate a failure in the flash hardware.
34	TIMEOUT	ESoftLoad time out has occurred

C.3 M3TRINFO

Satel M3-TR3 radio configuration information

The M3TRINFO log reports the current configuration from the Satel M3-TR3 radio.

> Requesting this log will disrupt operation of the radio if data is currently being transmitted or received.

Message ID: **9012**

Log Type: **Async**

Recommended Input:

```
log m3trtinfoa onchanged
m3trmode prog
m3trconfig log all
m3trmode normal
```

ASCII Example—Satel 400 MHz Relay

```
#M3TRINFOA,COM1,0,83.0,FINESTEERING,1810,321736.900,00040000,BA49,32768;
1,"STATE","PROG"*FF16494B
#M3TRINFOA,COM1,0,83.0,FINESTEERING,1810,321737.257,00040000,BA49,32768;
1,"COMPAT","0"*6F782F6B
#M3TRINFOA,COM1,0,83.0,FINESTEERING,1810,321737.269,00040000,BA49,32768;
1,"FREQTX","438.00000 MHz"*65F76C5C
#M3TRINFOA,COM1,0,83.0,FINESTEERING,1810,321737.279,00040000,BA49,32768;
1,"FREQRX","440.50000 MHz"*F4F42A60
#M3TRINFOA,COM1,0,83.0,FINESTEERING,1810,321737.291,00040000,BA49,32768;
1,"SPACING","12.5 kHz"*48D4AD3F
#M3TRINFOA,COM1,0,83.0,FINESTEERING,1810,321737.301,00040000,BA49,32768;
1,"TXPWR","1000 mW"*0E2517CA
#M3TRINFOA,COM1,0,83.0,FINESTEERING,1810,321737.312,00040000,BA49,32768;
1,"FEC","1"*1D146F57
#M3TRINFOA,COM1,0,83.0,FINESTEERING,1810,321737.323,00040000,BA49,32768;
1,"ERR_CHECK","0"*35D871B0
```

Field	Field type	Data Description	Format	Binary Bytes	Binary Offset
1	M3TRINFO header	Log header	-	H	0
2	#fields	Number of fields being reported.	Long	4	H
3	name	Name of the field being reported. See *Table 28, M3TRINFO Fields* on page 98.	String	String[32]	H+4
4	value	Value of the field being reported. See *Table 28, M3TRINFO Fields* on page 98.	String	String[32]	variable
5	<name and value repeated for each field>				

Field	Field type	Data Description	Format	Binary Bytes	Binary Offset
6	xxxx	32-bit CRC (ASCII and Binary only)	Hex	4	variable
7	[CR][LF]	Sentence terminator (ASCII only)	-	-	-

Table 28: M3TRINFO Fields

Name		Description	Values
Binary Value	ASCII Value		
1	state	Radio state	off - power off, radio disconnected from receiver prog - programming mode, radio disconnected from receiver online - radio enabled, but not connected to receiver normal - radio enabled and connected to receiver
2	compat	Compatibility mode	See *Table 29, Compatibility Mode*
4	freqtx	Transmit frequency, MHz.	438.0000 MHz to 473.0000 MHz
5	freqrx	Receive frequency, MHz	438.0000 MHz to 473.0000 MHz
6	spacing	Channel Spacing, kHz	12.5 kHz or 25.0 kHz
7	txpwr	Maximum transmit power, milliwatts	100 mW, 200 mW, 500 mW, 1000 mW
8	fec	Forward error correction.	1, 0
9	encryption	Not implemented	Reserved
10	err_check	Error check, on/off	Reserved

Table 29: Compatibility Mode

Value	Mode
0	Satelline-3AS
1	PacCrest-4FSK
2	PacCrest-GMSK
3	Trimtalk450s(P)
4	Trimtalk450s(T)
5	PacCrest-FST

C.4 MM2TINFO

Freewave MM2-T radio configuration information

The MM2TINFO log reports the current configuration from the Freewave MM2-T radio.

> Requesting this log will disrupt operation of the radio if data is currently being transmitted or received.

Message ID: **9011**

Log Type: **Asnyc**

Recommended Input:

```
log mm2tinfo onchanged
```

ASCII Example:

```
log mm2tinfoa onchanged
mm2tmode prog
mm2tconfig log all
mm2tmode normal

#MM2TINFOA,COM1,0,34.5,FINESTEERING,1810,319649.489,00040000,09AB,32768;
1,"STATE","PROG"*BF6988E4

#MM2TINFOA,COM1,0,55.0,FINESTEERING,1810,319650.543,00040000,09AB,32768;
1,"FREQ","E"*F7BF0BA1

#MM2TINFOA,COM1,0,49.5,FINESTEERING,1810,319652.116,00040000,09AB,32768;
1,"HOPTABLEVER","6"*84801D12

#MM2TINFOA,COM1,0,49.5,FINESTEERING,1810,319653.695,00040000,09AB,32768;
1,"HOPTABLESIZE","112"*A5FFC5CF

#MM2TINFOA,COM1,0,55.0,FINESTEERING,1810,319656.856,00040000,09AB,32768;
1,"FREQZONE","0011001100110011"*E55B1236

#MM2TINFOA,COM1,0,52.0,FINESTEERING,1810,319657.979,00040000,09AB,32768;
1,"MAXPKT","9"*2B4D11CA

#MM2TINFOA,COM1,0,52.0,FINESTEERING,1810,319658.952,00040000,09AB,32768;
1,"MINPKT","9"*A9DFFAC2

#MM2TINFOA,COM1,0,52.0,FINESTEERING,1810,319660.068,00040000,09AB,32768;
1,"XMITRATE","1"*B7C81603

#MM2TINFOA,COM1,0,46.5,FINESTEERING,1810,319661.062,00040000,09AB,32768;
1,"RFDATARATE","3"*42C94255

#MM2TINFOA,COM1,0,46.5,FINESTEERING,1810,319662.152,00040000,09AB,32768;
1,"NID","4095"*D818355B

#MM2TINFOA,COM1,0,47.5,FINESTEERING,1810,319663.233,00040000,09AB,32768;
1,"SNID","FF"*62278B67

#MM2TINFOA,COM1,0,47.5,FINESTEERING,1810,319664.478,00040000,09AB,32768;
1,"TXPWR","0"*5D3A9488

#MM2TINFOA,COM1,0,47.5,FINESTEERING,1810,319665.311,00040000,09AB,32768;
1,"MMODE","3"*1025DEE7
```

```
#MM2TINFOA,COM1,0,49.0,FINESTEERING,1810,319666.401,00040000,09AB,32768;
1,"RADIOID","3737"*55F38E86

#MM2TINFOA,COM1,0,49.0,FINESTEERING,1810,319667.482,00040000,09AB,32768;
1,"RADIONAME","TEST"*D77F40B0

#MM2TINFOA,COM1,0,49.0,FINESTEERING,1810,319668.075,00040000,09AB,32768;
1,"SERIALNO","863-5480"*0E164C1F

#MM2TINFOA,COM1,0,47.5,FINESTEERING,1810,319668.652,00040000,09AB,32768;
1,"FWVERSION","v10.6.8"*D3D59815

#MM2TINFOA,COM1,0,47.5,FINESTEERING,1810,319669.241,00040000,09AB,32768;
1,"MODELCODE","DMM2TLF"*18EE0AA5
```

Field	Field type	Data Description	Format	Binary Bytes	Binary Offset
1	MM2TINFO header	Log header	-	H	0
2	#fields	Number of fields being reported.	Long	4	H
3	name	Name of the field being reported. See *Table 17, MM2TCONFIG Parameters* on page 85	String[32}	variable	H+4
4	value	Value of the field being reported. See *Table 17, MM2TCONFIG Parameters* on page 85	String[32]	variable	variable
5	<name and value repeated for each field>				
6	xxxx	32-bit CRC (ASCII and Binary only)	Hex	4	variable
7	[CR][LF]	Sentence terminator (ASCII only)	-	-	-

C.5 NTRIPSTATUS

NTRIP diagnostic information

The NTRIPSTATUS log provides diagnostic information for the NTRIP connection.

Message ID: **1820**

Log Type: **Asnyc**

Recommended Input:

```
log ntripstatus onchanged
```

ASCII Example:

```
#ntripstatusa,com2,0,84.5,unknown,0,0.000,00000000,3c46,32768;
ncom1,disconnected,0,0,0,""*ed521445
```

Field	Field type	Data Description	Format	Binary Bytes	Binary Offset
1	NTRIPSTATUS header	Log header	-	H	0
2	port	NTRIP port See *Table 30, COM Port Identifiers*	Enum	4	H
3	status	State of the NTRIP connection See *Table 31, NTRIP Status* on page 102.	Enum	4	H+4
4	rx bytes	Total number of bytes received	Ulong	4	H+8
5	tx bytes	Total number of bytes transmitted	Ulong	4	H+12
6	uptime	Total time of continuous NTRIP service in seconds	Ulong	4	H+16
7	info	Extra information about the current status	Char	64	H+20
8	xxxx	32-bit CRC (ASCII and Binary only)	Hex	4	H+84
9	[CR][LF]	Sentence terminator (ASCII only)	-	-	-

Table 30: COM Port Identifiers

Binary	ASCII	Description
1	COM1	COM port 1
2	COM2	COM port 2
3	COM3	COM port 3
6	THISPORT	The current COM port
8	ALL	All COM ports
33	BT1	Bluetooth COM port

Table 31: NTRIP Status

Binary	ASCII	Description
1	DISCONNECTED	Client is not currently active
2	CONNECTING	Client is establishing a TCP/IP socket to a caster (either to request a mount point or to request the source table)
3	REQUESTING	Client is requesting a mount point and waiting for a response
4	STREAMING	Client is streaming NTRIP corrections
5	RECONNECT_DELAY	The connection to the caster was lost and the client is waiting for a period of time before attempting to reconnect
6	REQUESTING_SOURCETABLE	Client is requesting the sourcetable from the caster
7	STREAMING_SOURCETABLE	Client is retrieving the sourcetable from the caster
8	WAITING_GGA	Client is waiting for a GGA log

C.6 VERSION

Hardware and software versions and serial numbers

The VERSION log contains the version information for all components of a system.

A component may be hardware (for example, a receiver or data collector) or firmware in the form of applications or data (for example, data blocks for height models or user applications). Some components are not available until the module is powered on, for example, celluarconfig power on.

Message ID: 37

Log Type: Polled

Recommended Input:

```
log versiona once
```

ASCII Example—Base Log (Freewave MM2T):

```
[COM1]<VERSION COM1 0 44.0 UNKNOWN 0 744.615 014c4020 3681 45477
<     5
<          GPSCARD "D2LR0GTTRA" "BFN3070041H" "OEM628-2.01" "OEM060410RN0000"
"OEM06000RBG000" "2014/May/20" "21:58:59"
<          DB_USERAPP "SmartCom" "0" "" "1.000" "" "0" "13:28:29"
<          ENCLOSURE "" "NMCM13210021T" "" "" "" "" ""
<          EXTENSION "SmartCom" "<SmartCom PSN>" "<HWVer>" "<SWVER>" "<BOOTVER>"
"2014/May/20" "21:58:59"
<          WIFI "TiWiBLE" "" "" "1.4.1" "Rev 6.3.0.0.77" "" ""
<          "RADIO" "MM2T" "" "1.0.0" "Rev 1.2.1" "" ""
```

ASCII Example—Rover Log (Satel M3TR):

```
<     5
<          GPSCARD "D2LR0GTTRA" "BFN3070041H" "OEM628-2.01" "OEM060410RN0000"
"OEM06000RBG000" "2014/May/20" "21:58:59"
<          DB_USERAPP "SmartCom" "0" "" "1.000" "" "0" "13:28:29"
<          ENCLOSURE "" "NMCM13210021T" "" "" "" "" ""
<          EXTENSION "SmartCom" "<SmartCom PSN>" "<HWVer>" "<SWVER>" "<BOOTVER>"
"2014/May/20" "21:58:59"
<          RADIO "M3TR" "" "" "1.0.0" "Rev 1.2.1" "" ""
```

ASCII Example—Cellular:

```
[COM1]<VERSION COM1 0 44.0 UNKNOWN 0 744.615 014c4020 3681 45477
<     5
<          GPSCARD "D2LR0GTTRA" "BFN3070041H" "OEM628-2.01" "OEM060410RN0000"
"OEM06000RBG000" "2014/May/20" "21:58:59"
<          DB_USERAPP "SmartCom" "0" "" "1.000" "" "0" "13:28:29"
<          ENCLOSURE "" "NMCM13210021T" "" "" "" "" ""
<          EXTENSION "SmartCom" "<SmartCom PSN>" "<HWVer>" "<SWVER>" "<BOOTVER>"
"2014/May/20" "21:58:59"
<          CELLULAR "HE910-D" "351579050414521" "" "12.00.023" "" "" ""
```

> The VERSION log is a useful log as a first communication with your receiver. Once connected, using NovAtel Connect or HyperTerminal, log VERSION and check that the output makes sense. Also, ensure that you have the receiver components you expected.

Field	Field type	Data Description	Format	Binary Bytes	Binary Offset
1	VERSION header	Log header	-	H	0
2	# comp	Number of components (cards, and so on)	Long	4	H
3	type	Component type See *Table 32, Supported Relay Components* on page 105	Enum	4	H+4
4	model	OEM6 firmware model number e.g., G1SBOGTTO indicates the receiver's current model functionality	Char[16]	16	H+8
5	psn	Product serial number	Char[16]	16	H+24
6	hw version	Hardware version Field format: P-RS-CCC P = hardware platform (for example, OEM628) R = hardware revision (for example, 6.00) S = processor revision (for example, A)[a] CCC = COM port configuration (for example, 22T)[b]	Char[16]	16	H+40
7	sw version	Firmware version Field format: OEM0603xxRN0000 OEM06 = the product 03 = the feature release xx = the maintenance release number	Char[16]	16	H+56
8	boot version	Boot code version Field format: OEM0603xxRGB000 OEM06 = the product 03 = the feature release (content may not be the same as the software version) xx= the maintenance release number	Char[16]	16	H+72
9	comp date	Firmware compile date Field format: YYYY/Mmm/DD YYYY = year Mmm = month DD = day (1 - 31)	Char[12]	12	H+88
10	comp time	Firmware compile time Field format: HH:MM:SS HH = hour MM = minutes SS = seconds	Char[12]	12	H+100
11	Next component offset = H + 4 + (#comp x 108)				

Field	Field type	Data Description	Format	Binary Bytes	Binary Offset
12	xxxx	32-bit CRC (ASCII and Binary only)	Hex	4	H+4+ (#comp x 108)
13	[CR][LF]	Sentence terminator (ASCII only)	-	-	-

a. This field may be empty if the revision is not stamped onto the processor.

b. One character for each of the COM ports 1, 2, and 3. Characters are: 2 for RS-232, 4 for RS-422, T for LV-TTL, and X for user-selectable (valid for COM1 of certain products). Therefore, the example is for a receiver that uses RS-232 for COM 1 and COM 2 and LV-TTL for COM 3.

Table 32: Supported Relay Components

Binary	ASCII	Description
1	GPSCARD	OEM6 core card
2	DB_USERAPP	SmartCom application
3	ENCLOSURE	SMART6-L enclosure version
4	EXTENSION	SmartCom card
5	WIFI	Wi-Fi chip
6	RADIO	UHF radio
7	CELLULAR	Cellular radio
8	WWW_CONTENT	Web content See *Table 33, WWW_CONTENT version information*
9	REGULATORY	Regulatory settings see *Table 34, REGULATORY version information*

Table 33: WWW_CONTENT version information

Field	Description
model	Web content type
psn	reserved
hw version	reserved
sw version	Web content build number (SW version)
boot version	Web content revision number
comp date	Date the web content was assembled
comp time	Time the web content was assembled

Table 34: REGULATORY version information

Field	Description
model	Region
boot version	Flags
all other fields	reserved

Appendix D Replacement Parts

The following are lists of the replacement parts available for the NovAtel Relay. Should assistance be required or you need to order additional components, contact your local NovAtel dealer or *Customer Service* representative.

D.1 Relay

Table 35: Relay Products

Part Description	NovAtel Part
Relay with GSM HPSA	01019343
Relay with CDMA 1xRTT	01019345
Relay with Satel 400 MHz UHF radio	01019347
Relay with Freewave 900 MHz UHF radio	01019349
NovAtel Relay Interface Cable: 14-pin socket to 3 DB-9 connectors, power connection, twisted CAN I/O pair and other bare wire connectors (see *NovAtel Relay Interface Cable (01019382)* on page 67)	01019382
Relay NMO to TNC Adapter Cable	01019372
Mounting Plate Kit	70023098
Pole Mounting Plate Kit	70023100
Magnetic Mount Radio Antenna Cable	12023300

D.2 User Manuals

Table 36: Reference User Manuals

Part Description	NovAtel Part
OEM6 Family Firmware Reference Manual	OM-20000129
SMART6-L User Manual	OM-20000146

The accessories above are also available from www.novatel.com