深圳市永联无线科技有限公司

ShenZhen City Flink Wi Technology CO.,LTD.

产品承认书

SPECIFICATION FOR APPROVED

客户
CUSTOMER: _____

产品名称
PRODUCTS: YL3216H5R2G45

客户料号
PART NO: _____

产品型号
Spec.: _____

日期
Data: 2023.12.06

供应商 SUPPLIER		
拟制 PREPARED BY	审核 CHECKED BY	批准 APPROVED BY

客户 CUSTOMER		
承认 ACCEPTED BY	审核 CHECKED BY	批准 APPROVED BY

备注：承认盖章后请回复一份承认书（或复印件）给我司，其余由贵公司存档

REMARK:Please send us one(or copy)of this approval with stamp after accepting,other copies filed by the customer.

地址：深圳市宝安45区裕安一路华创达商务楼606

ADDRESS: 606 Huachuangda Business Building, Yu'an 1st Road, Bao'an 45 District, ,Shenzhen

电话 Tel: 18820170917 传真 Fax: 0755-26976277

複製禁止

2.4GHz Chip Antenna: YL3216H5R2G45

Application:

WLAN, 802.11b/g, Bluetooth, etc…

Features

SMD, high reliability, ultra Impact, Omni-directional…

Part number

YL	3216	H5	R	2G45
(1)	(2)	(3)	(4)	(5)

(1)Product Type	Chip Antenna
(2) Size Code	3.2x1.6mm
(3) Type Code	H5
(4) Packing	Tape and reel
(5) Frequency	2.45GHz

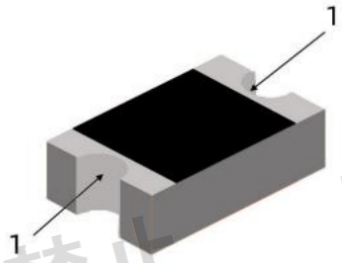

不区分天线两端的馈电焊盘和固定焊盘

Electrical Specification

Working Frequency Range	2400 ~2484 MHz
Peak Gain	2.98dBi (Typ.)
Impedance	50 Ohm
Return loss	10 dB (Min)
Polarization	Linear
Azimuth Beamwidth	Omni-directional
Operation Temperature(℃)	-40 ~85℃

The specification is defined on EVB.

Dimension and Terminal Configuration

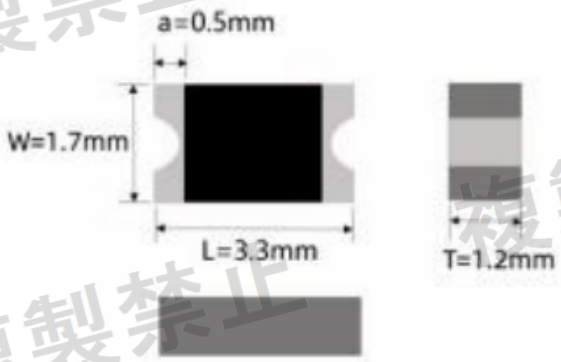

Dimension (mm)	
L	3.2 +-0.20
W	1.6+- 0.20
T	1.20+-0.20
A	0.20+-0.20

No.	Terminal Name
1	Feeding
2	Soldering

FootPrint (Unit : mm)

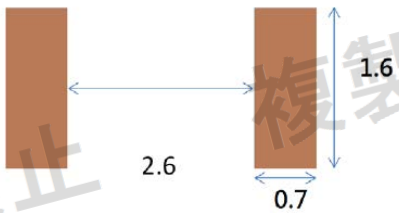

2.4GHz 2.45HHz Chip Antenna: YL3216H5R2G45

Evaluation Board Reference

PCB Dimension & Antenna Layout Reference

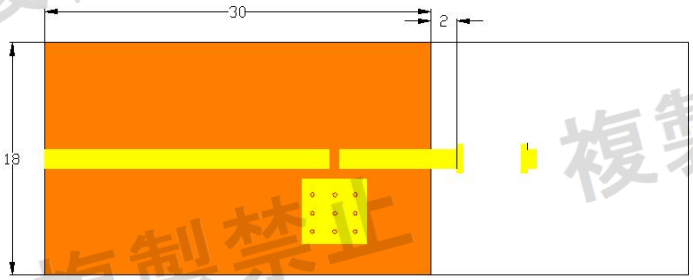

unit :mm

Electrical Characteristics

Return Loss & Radiation

Return Loss

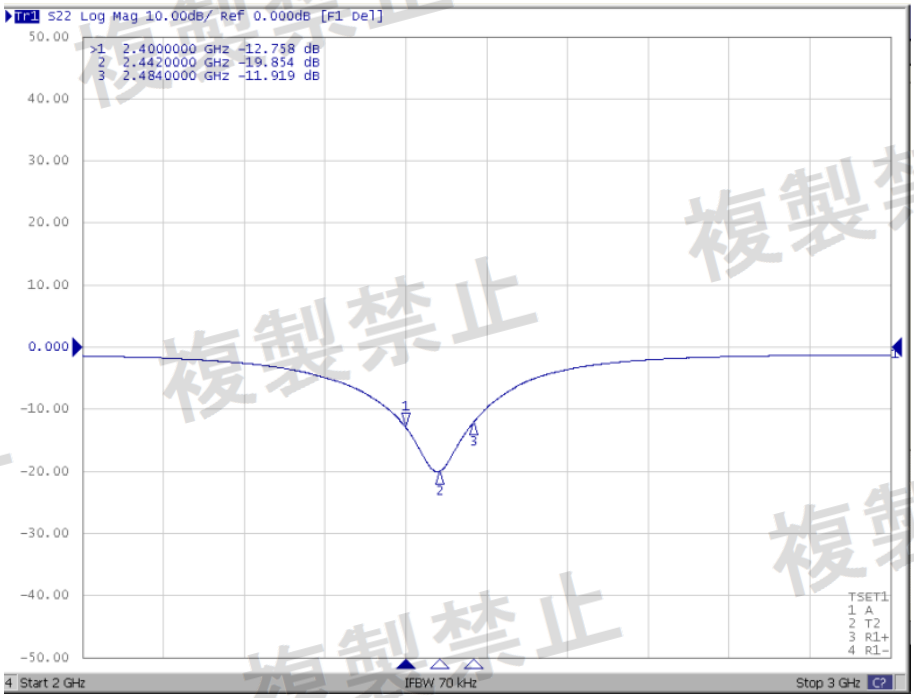

Frequency (MHz)	S11 (dB)
2400	-12.8
2442	-19.8
2484	-11.9

複製禁止

2.4GHz Chip Antenna: YL3216H5R2G45

Radiation Pattern

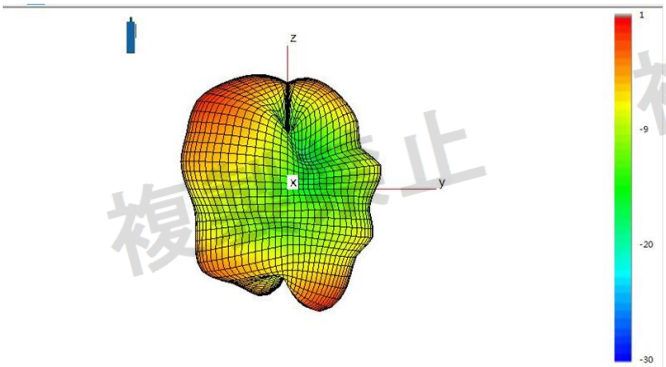

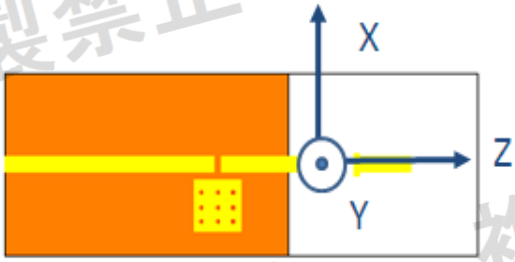

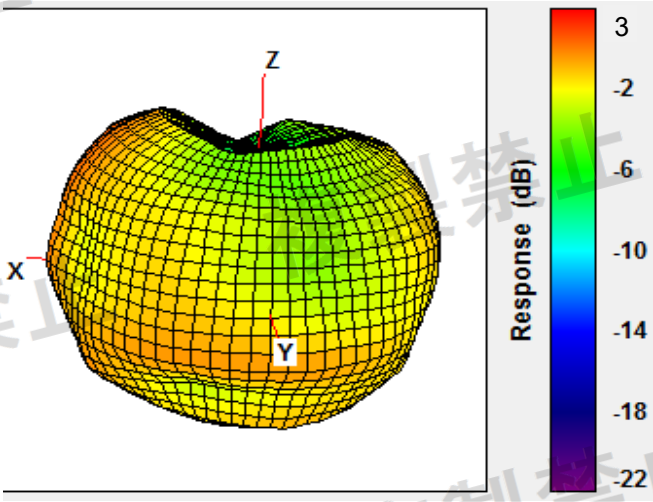

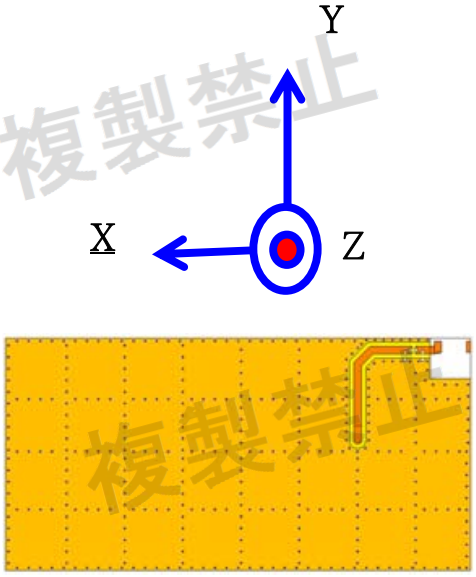

	Efficiency	Peak Gain
2400MHz	65.77 %	2.24 dBi
2445MHz	79.20 %	2.98dBi
2500MHz	66.13 %	2.38 dBi

複製禁止

2.4GHz 2.45HHz Chip Antenna: YL3216H5R2G45

Taping Specifications

Reel

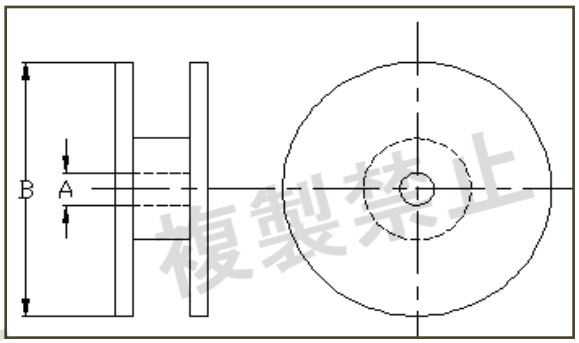

Checking note	Index	Spec (mm)
Internal diameter of reel	A	60.20 ± 0.50
External diameter of reel	B	178 ± 1.00

Quantity/per reel	2500 pcs
Tape material	Plastic (embossed)

Taping Blister Tape

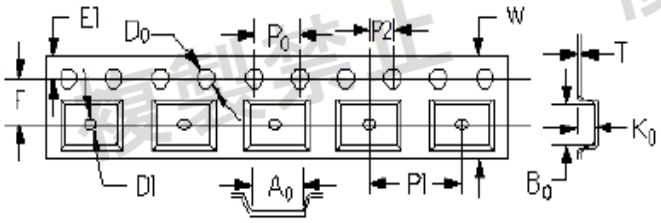

Checking note	Index	Spec (mm)
Sprocket hole	D0	1.50 +0.10/-0.00
Distance sprocket hole to outside	E1	1.75 ± 0.10
Distance sprocket hole to pocket	F	5.50 ± 0.05
Distance sprocket hole to sprocket hole	P0	4.00 ± 0.10
Distance pocket to pocket	P1	4.00 ± 0.10
Distance sprocket hole to pocket	P2	2.00 ± 0.05
Tape width	W	12.00 +0.30/-0.10
Pocket width nominal clearance	A0	2.28 ± 0.13
Pocket length nominal clearance	B0	5.70 ± 0.13
Pocket depth minimum clearance	K0	1.58 ± 0.10
Thickness of tape	T	0.23 ± 0.02

複製禁止

2.4GHz 2.45HHz Chip Antenna: YL3216H5R2G45

Reliability Table

Test Item	Procedure	Requirements Ceramic Type	Remark (Reference)
Electrical Characterization		Fulfill the electrical specification	User Spec.
Thermal Shock	1. Preconditioning: 50 ± 10℃ / 1 hr , then keep for 24 ± 1 hrs at room temp. 2. Initial measure: Spec: refer Initial spec. 3. Rapid change of temperature test: -30℃ to +85℃; 100 cycles; 15 minutes at Lower category temperature; 15 minutes at Upper category temperature.	No Visible Damage. Fulfill the electrical specification.	MIL-STD-202 107
Temperature Cycling	1. Initial measure: Spec: refer Initial spec. 2. 100 Cycles (-30℃ to +85℃), Soak Mode=1 (2 Cycle/hours). 3. Measurement at 24 ± 2Hours after test condition.	No Visible Damage. Fulfill the electrical specification.	JESD22 JA104
High Temperature Exposure	1. Initial measure: Spec: refer Initial spec. 2. Unpowered; 500hours @ T=+85℃. 3. Measurement at 24 ± 2 hours after test.	No Visible Damage. Fulfill the electrical specification.	MIL-STD-202 108
Low Temperature Storage	1. Initial measure: Spec: refer Initial spec. 2. Unpowered: 500hours @ T= -30℃. 3. Measurement at 24 ± 2 hours after test.	No Visible Damage. Fulfill the electrical specification.	MIL-STD-202 108
Solderability (SMD Bottom Side)	Dipping method: a. Temperature: 235 ± 5°C b. Dipping time: 3 ± 0.5s	The solder should cover over 95% of the critical area of bottom side.	IEC 60384-21/22 4.10
Soldering Heat Resistance (RSH)	Preheating temperature: 150 ± 10°C. Preheating time: 1~2 min. Solder temperature: 260 ± 5°C. Dipping time: 5 ± 0.5s	No Visible Damage.	IEC 60384-21/22 4.10
Vibration	5g's for 20 min., 12 cycles each of 3 orientations Note: Use 8"X5" PCB .031" thick 7 secure points on, one long side and 2 secure points at corners of opposite sides. Parts mounted within 2" from any secure point. Test from 10-2000 Hz.	No Visible Damage.	MIL-STD-202 Method 204
Mechanical Shock	Three shocks in each direction shall be applied along the three mutually perpendicular axes of the test specimen (18 shocks) Peak value: 1,500g's Duration: 0.5ms Velocity change: 15.4 ft/s Waveform: Half-sine	No Visible Damage.	MIL-STD-202 Method 213
Humidity Bias	1. Humidity: 85% R.H., Temperature: 85 ± 2 °C. 2. Time: 500 ± 24 hours. 3. Measurement at 24 ± 2hrs after test condition.	No Visible Damage. Fulfill the electrical specification.	MIL-STD-202 Method 106

複製禁止

Board Flex (SMD)	1. Mounting method: IR-Reflow. PCB Size (L:100 × W:40 × T:1.6mm) 2. Apply the load in direction of the arrow until bending reaches 2 mm. 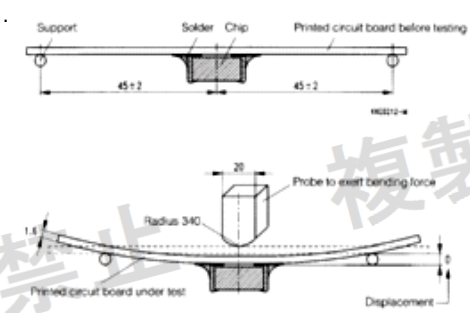	No Visible Damage.	AEC-Q200 005
Adhesion	Force of 1.8Kg for 60 seconds. 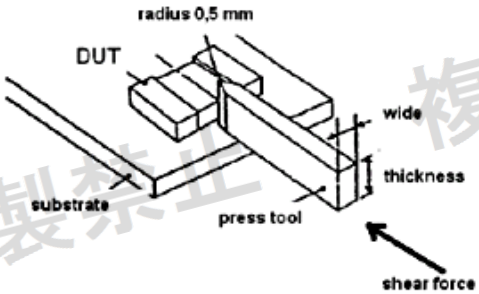	No Visible Damage Magnification of 20X or greater may be employed for inspection of the mechanical integrity of the device body terminals and body/terminal junction.	AEC-Q200 006
Physical Dimension	Any applicable method using x10 magnification, micrometers, calipers, gauges, contour projectors, or other measuring equipment, capable of determining the actual specimen dimensions.	In accordance with specification.	JESD22 JB100

Revision History

Revision	Date	Content
1	2021/7/26	New issue

複製禁止