CATTRON™

Messenger BLE

User Manual

9M02-7000-A101-EN

CONNECT. CONTROL. PROTECT.

Revision History

VERSION	DATE	NOTES
		Initial Release
1.0.38	08/2020	
A	12/2020	Document rebranded and contact information updated

Any information furnished by Cattron™ and its agents is believed to be accurate and reliable. All specifications are subject to change without notice. Responsibility for the use and application of Cattron products rests with the end user since Cattron and its agents cannot be aware of all potential uses. Cattron makes no warranties as to non-infringement nor as to the fitness, merchantability, or sustainability of any Cattron products for any specific or general uses. Cattron Holdings, Inc., or any of its affiliates or agents shall not be liable for incidental or consequential damages of any kind. All Cattron products are sold pursuant to the Terms and Conditions of Sale, a copy of which will be furnished upon request. When used as a tradename herein, Cattron means Cattron Holdings, Inc. or one or more subsidiaries of Cattron Holdings, Inc. Cattron™, corresponding logos, and other marks are trademarks or registered trademarks of Cattron Holdings, Inc. Other marks may be the property of third parties. Nothing herein provides a license under any Cattron or any third party intellectual property right.

Contents

1 Description 7
1.1 Capabilities 7
1.2 Monitoring 7
1.3 Host Server Communications 7
1.3.1 Event Codes 8
1.3.2 Positive Acknowledgement 8
1.3.3 Store and Forward Data Queue 8
1.3.4 Real-Time Clock (RTC) 8
1.3.5 Packaging 9
1.3.6 Specifications 9
2 Installation and Setup 11
2.1 Installation Steps 11
2.2 Unpacking the Equipment 11
2.3 Mounting the Equipment 11
2.3.1 EEC Thermoplastic Enclosure 12
2.4 Mounting the Antenna 12
2.5 DIP Switch/Jumper Settings 13
2.6 DIP Switch 3 Decode 14
2.7 IO Connections 15
2.8 Cellular Setup 16
2.9 Bluetooth Setup 16
3 LED States 17
4 IO Architecture 18
5 Channels 19
5.1 Predefined Channels 19
5.2 Channel Data 24
6 SMS Text Commands 26
6.1 Command Syntax 26
7 Modbus 29
7.1 RTU Slave 29
7.2 RTU Master 29
8 Debug Menu 30

9 Configuration 31
9.1 Debug Configuration Commands 33
9.1.1 Read Command 33
9.1.2 Reset Command 34
9.1.3 Global Command 34
9.2 OTA Configuration Commands 35
9.2.1 OTA Command 35
9.2.2 SMS Command 35
9.3 Site Configuration – Type 1 36
9.4 Options Configuration – Type 2 38
9.5 CELL Configuration – Type 3 39
9.6 FTP Configuration – Type 4 41
9.7 Geofence Configuration – Type 5 42
9.8 Serial Port Configuration – Type 6 43
9.9 Reporting Configuration – Type 7 45
9.10 Engine Configuration – Type 8 47
9.11 Channel Configuration – Type 9 49
9.12 Report Flag Configuration – Type 12 53
9.13 Date/Time Read/Write – Type 16 55
9.14 MODBUS Configuration – Type 18 56
9.15 Analog Input Configuration – Type 11 59
9.16 Digital Input Configuration – Type 17 60
9.17 Digital Output Configuration – Type 13 61
9.18 EVAL Expression Configuration – Type 10 62
9.19 J1939 PGN Configuration – Type 15 65
9.20 J1939 SPN Configuration – Type 14 66
9.21 PEER Poll Configuration – Type 28 68
9.22 PEER Push Configuration – Type 29 69
9.23 Bluetooth Nordic Configuration – Type 52 70
10 How-To 71
10.1 Setting Reporting Rates When Moving and Stationary 71
10.2 Computing Engine Hours from Engine Run 71
10.3 Enabling Low Power Mode to Conserve Battery 71
10.4 Setting Hard Acceleration/Deceleration Alarms 72

10.5 Using a Digital Input to Determine Engine On 72
10.6 Using the Analog Input for Fuel Level 73
11 Appendix A – Monitored Engine Parameters 74
12 Appendix B – Data Registers 77
13 Technical Support 88

Introduction

This User Manual describes installation and setup of the Messenger-BLE product. Throughout this document, Messenger-BLE and Messenger are used interchangeably.

The Messenger is a complete monitoring, alarm notification and telemetry platform. The intended markets include, but are not limited to, water/waste water utility, off-road heavy construction equipment, on-road semi-trucks, oil and gas, and standby power generators. It supports monitoring of data values from on-board physical IO, the J1939 SAE engine bus topology and the industry standard Modbus RTU serial protocol, as well as support of custom serial communications to external devices.

Features

The hardware feature set of this platform includes the following:

- ARM 32-bit Cortex -M4 Core w/FPU
- 2 MB of on-board FLASH memory, 8 MB of external FLASH
- 640 KB of on-board SRAM memory, 512 KB of external battery-backed SRAM
- Real Time Clock (battery-backed)
- Two Serial Ports (RS485 only)
- Four Digital Inputs (user configurable for voltage or grounded input)
- Three Digital Outputs (open-collector transistor closures to ground)
- Three Analog Inputs (12-bit, user configurable for V or I input)
- One CAN Interface, compliant to Bosch CAN Protocol v2.0 A/B
- Cellular modem: HSPA (3G) or LTE (4G)
- GPS receiver, providing location services using multiple GNSS constellations
- 3-axis Accelerometer
- SuperCap for brown-out protection
- Separate Bluetooth engine for wireless connection to hand-held devices
- Deutsch EEC automotive grade enclosure

1 Description

1.1 Capabilities

The Messenger is a highly configurable platform for remote monitoring and control applications. Some of the capabilities are listed below.

- Virtual real-time transfer of monitored conditions
- Local computations from monitored conditions
- Time stamping of monitored data and events
- Battery-backed historical data/event buffers
- Automatic monitoring of max/min for analog values
- Continuous monitoring of J1939 bus data
- Event and data logging
- Telemetry of monitored conditions to server applications via cellular
- Over the Air (OTA) programming and diagnostics, cellular and Bluetooth
- SMS messages sent on monitored conditions
- Parameter setting via SMS messages

1.2 Monitoring

All monitored values can be transmitted via cellular to a host server of the customer's choosing. Monitored values are transmitted based on time or notification events. Notification events are based on rules set by the user and each event can generate an immediate report. Telemetry includes cellular connectivity and GPS for asset location.

Monitored data values are mapped to fixed channels in the Messenger. A channel defines a set of attributes for the monitored data for doing calculations, alarm detection, data formatting and reporting.

For example, RPM is fixed to channel 52. For channel 52, the user can set limits on RPM for notification when the RPM gets too high, and how to report the RPM values to a host server.

See Table 7 for a description of all the predefined channels and channel numbers. Appendix A – Monitored Engine Parameters is used to identify the set of SAE defined PGNs and SPNs for data values being read from the engine bus. The user can also configure for other engine values as needed.

1.3 Host Server Communications

The Messenger utilizes a proprietary protocol to send notifications and to receive OTA commands from a host server. Each notification sent typically consists of location, date/time, an event code and associated data. An event code provides a unique identifier to indicate the reason that the notification is being sent – for example, normal scheduled update or an engine diagnostic message received. A description of the protocol, format of messages and definition of event codes is available on request; contact Cattron at www.cattron.com/contact for additional information (reference the protocol document "M09-PRTCLxxx").

Some of the conditions on which notifications can be sent to the host server are listed below:

- Any monitored value exceeding a predefined or user-defined limit
- Any diagnostic message received from the engine bus
- Digital input changing state (on/off)
- Digital output changing state (on/off)

- Analog input transitioning into a warning or alarm region
- Analog input changing by user defined delta
- Scheduled/periodic update
- End of day
- System faults
- SMS text commands from a user or host server
- Power on or reset

1.3.1 Event Codes

Every message sent by the Messenger to a host-based server application is triggered by an event. The event generates a message and the message contains an Event Code. The Event Code uniquely identifies to the server the reason the message is being sent. Some of the messages generated contain data, others serve as just notification that a particular event has occurred. Protocol document “M09-PRTCLxxx” contains a list of all event codes.

1.3.2 Positive Acknowledgement

The Messenger can be configured to require a message acknowledgement from the host server or to send once and forget. Message acknowledgement provides a verifiable mechanism that a message was delivered, even during poor network conditions.

This parameter setting can be found in the CELL Configuration – Type 3 section.

1.3.3 Store and Forward Data Queue

There are several scenarios where a message may not be deliverable – network down, host server down and poor connectivity, to name a few. In the event that a message cannot be delivered, it is stored in memory and is continually re-sent until it is properly acknowledged. This store and forward memory is non-volatile and remains intact during power off.

1.3.4 Real-Time Clock (RTC)

The RTC is used to timestamp data records and events. All messages sent to the host server contain a timestamp to provide a chronology of data/events to the end user. This timestamp is UTC time. All timestamps viewed from the debug menu are local time based on the configured time zone.

The RTC is battery-backed to provide time keeping during power off. If the RTC is configured to be automatically set, the Messenger will set the time after every power on and perform a time check every midnight. If the RTC time differs from the actual time by more than 30 seconds, the RTC time will be adjusted.

The RTC can be set in one of the following ways:

Method	Description
Automatic via Cell	This is the default setting. The Messenger will set the RTC from an internet NIST time server.
Automatic via GPS	The Messenger will set the RTC from the date/time read from the GPS module.
Manually	The time is set via the Debug port through the Maintenance menu.
OTA/SMS	The RTC is set from an OTA config command or an SMS config command.

Configuration settings are available to define how the RTC is set.

1.3.5 Packaging

The Messenger is packaged in an automotive grade Deutsch enclosure. There are two antenna connections, one SMA connection for the GPS and one SMA-RP (reverse polarity) connection for cellular. The enclosure end-cap provides two circular M12, 8-pin connectors for power and IO. Figure 1 shows the interior of the Messenger BLE with the enclosure end-cap attached.

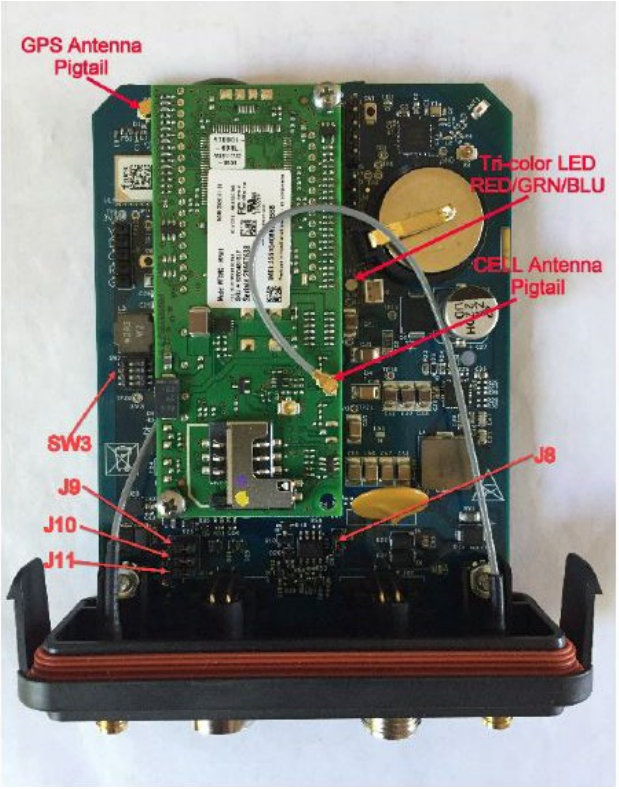

Figure 1: Messenger with Enclosure End-Cap Attached

1.3.6 Specifications

Power input:	8-36 VDC 26 mA @ 24 VDC (avg) Reverse polarity protection Overvoltage protection Internal solid-state fuse
Digital outputs (3 each):	Open-collector transistor switch to ground (current sink) 500 mA @ 12 VDC Current limited Overvoltage protection

Digital inputs (4 each):	Two modes of operation: DC voltage input or grounded input (user selectable) High-speed pulse counter inputs (user selectable) Current limited Overvoltage protection
Analog inputs (3 each):	12-bit ADC Accuracy: +/- 2% FS Input ranges: 0-10 VDC, 0-20 mA, 4-20 mA (user selectable)
CAN input (1 each):	Termination resistor (user selectable) Spike suppression
Serial RS485 inputs (2 each):	Termination resistor (user selectable) Current limited Overvoltage protection
Bluetooth (1 each):	Internal chip antenna (external antenna available; contact Cattron at www.cattron.com/contact for additional information) Application available for hand-held devices
Operating Temperature Range:	-40 to +85 °C

2 Installation and Setup

This section provides information on installing the Messenger and confirming its initial operation.

⚠	**WARNING**
	IT IS RECOMMENDED THAT YOU READ THIS ENTIRE CHAPTER BEFORE STARTING THE INSTALLATION.

2.1 Installation Steps

Installation consists of the following steps:

1. Unpack the Equipment.
2. Mount the Equipment.

   The Messenger should be mounted in a vertical position to try and minimize the chance of water entering through the antenna connections. The antenna wires should have a service loop just below the antenna connectors.
3. Connect Main Power.
4. Connect to engine bus – J1939.
5. Confirm that the Amber LED indicates normal CAN activity when the engine is started. If it does not, check the following:
   a. Confirm there is proper termination on the main CAN bus trunk.
   b. Double check the bus connections and signal polarity.

2.2 Unpacking the Equipment

The Messenger is shipped with the following:

- The Messenger electronics housed in a Deutsch thermoplastic enclosure
- A Cellular/GPS dual antenna (magnetic mount or bulkhead screw mount)
- User Manual (available electronically)
- Cable harnesses providing access to all Messenger IO

2.3 Mounting the Equipment

The Messenger is housed in an automotive grade weather resistant enclosure; the dimensions of the enclosure are shown in Figure 2. The entire enclosure with mated connectors is rated to IP55.

⚠	**CAUTION**
	MOUNT THE ENCLOSURE IN A VERTICAL ORIENTATION AND PROVIDE SERVICE LOOPS FOR EACH ANTENNA AND IO CABLE TO PREVENT WATER INTRUSION.

2.3.1 EEC Thermoplastic Enclosure

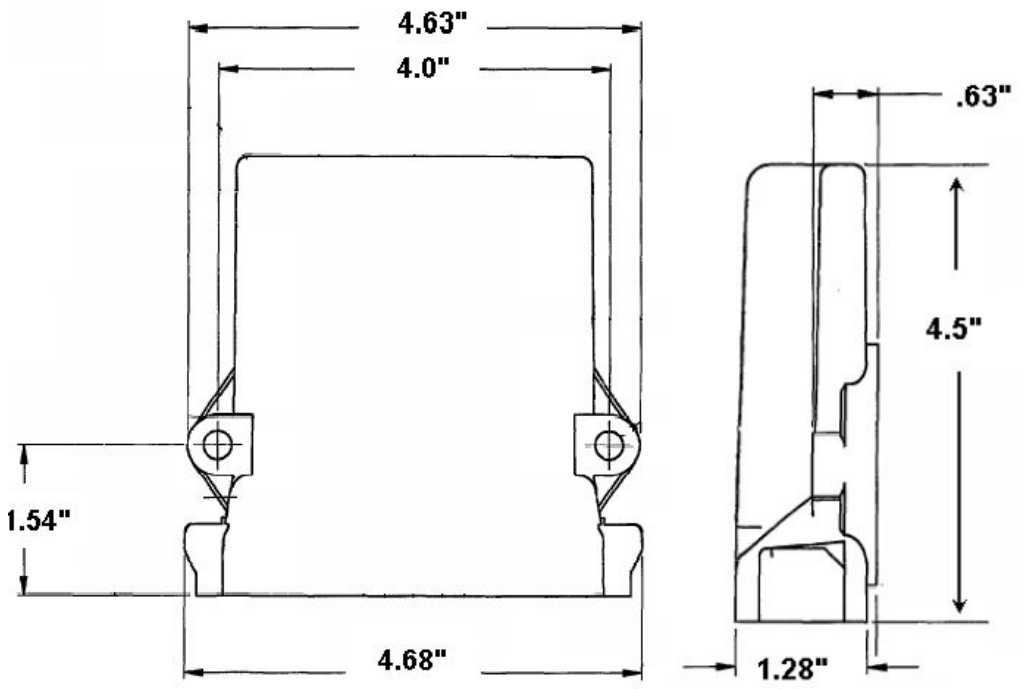

Figure 2: Deutsch EEC Thermoplastic Enclosure Dimensions

When mounting the enclosure to vibrating equipment, it is recommended that you use rubber dampeners to isolate the unit. Stainless mounting hardware is preferred and the use of lock washers is highly recommended.

2.4 Mounting the Antenna

The antenna shipped with the Messenger is a hockey puck style, a combination of cell and GPS. The GPS antenna frequency is 1575.42 MHz. The cell is a dual band antenna: 880-960 MHz and 1710-1990 MHz. The antenna can be ordered with a magnetic or a screw mount base.

In general, the antenna should be mounted with an unobstructed view of the sky. The GPS side works best when it can see the horizon. If the antenna is mounted outside and may be subject to lightning, a surge arrestor can be inserted between the Messenger antenna SMA connection and the antenna. If the antenna is mounted inside, it should be located near a window.

⚠	**CAUTION**
	SERVICE LOOPS SHOULD BE PROVIDED FOR THE ANTENNA CABLING, NEAR THE ANTENNA CONNECTIONS, IN ORDER TO MINIMIZE WATER INGRESS THROUGH THE SMA RF COAX CONNECTIONS.

2.5 DIP Switch/Jumper Settings

The Messenger uses an on-board DIP switch and jumpers to configure application specific IO and set operational modes. DIP SW3 is used to set operational modes. See Figure 3 for switch and jumper locations. See Figure 4 for IO selection settings.

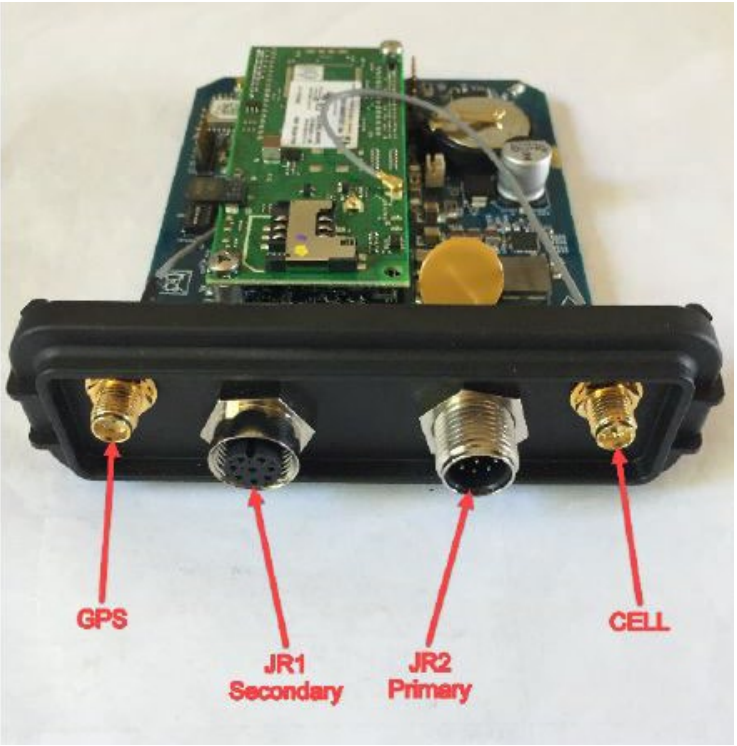

Figure 3: Messenger IO Connectors

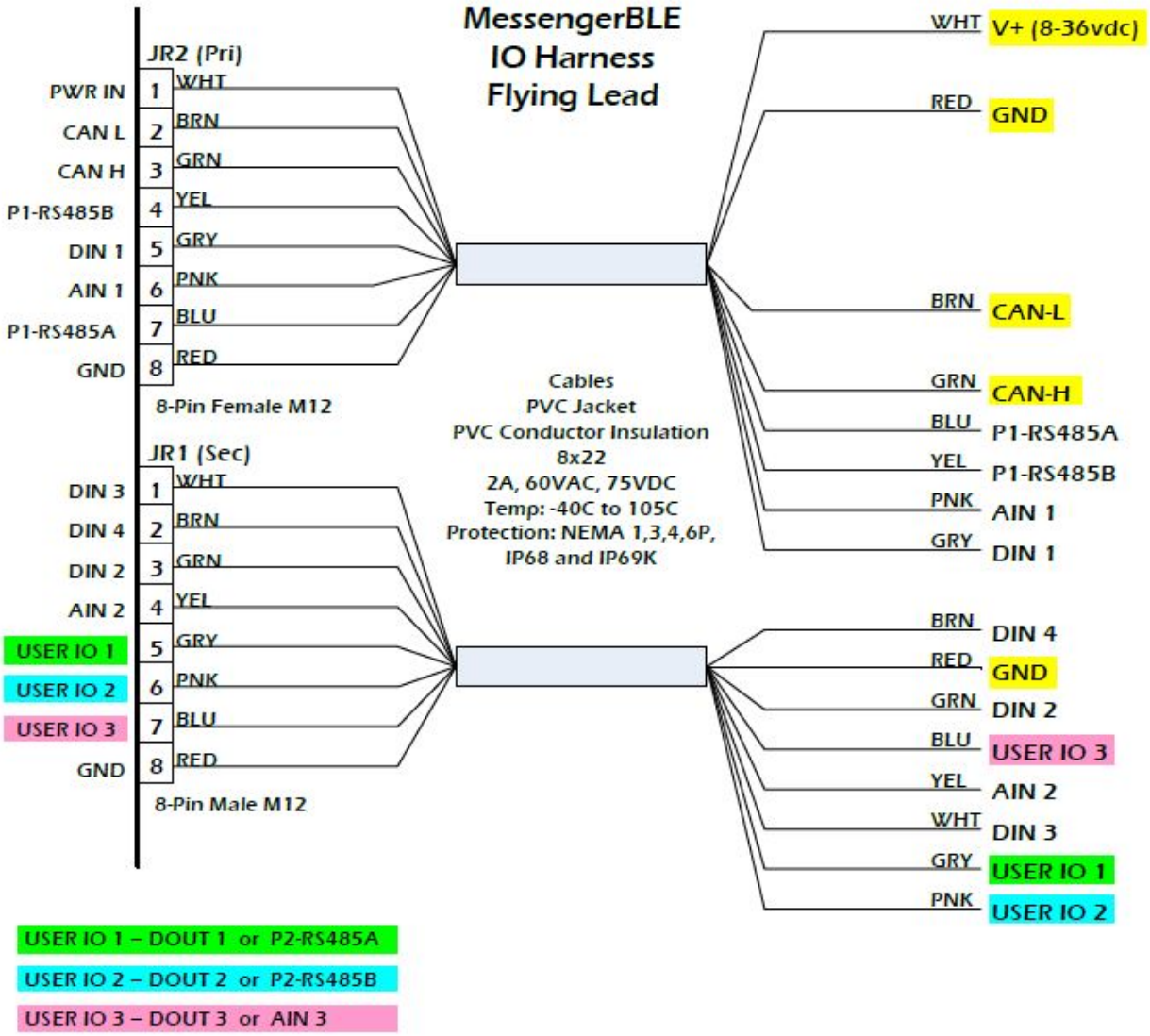

Figure 4: Messenger IO Signals

2.6 DIP Switch 3 Decode

DIP Switch 3 is a 4-position dip switch located on the left side of the board (refer back to Figure 1 to see the location). If any position on switch 3 is changed, the power must be cycled for the new switch positions to be read. Table 1 describes the position of the dip switches.

Table 1: DIP Switch 3 Decode

Position	1	2	3	4	Description
Function					
Enter BOOT Loader	↑	↑	↑	↑	Used for code download via internal debug port - RS232, 57600,8,1,N
Factory Default Settings	↓	↓	↓	↓	

Key: ↓ = switch in “OFF” position, ↑ = switch in “ON” position

Note: Switch positions 1 and 2 will override any other settings for Ports 2, 3, or 4.

2.7 IO Connections

The Deutsch EEC enclosure has a watertight end-cap fitted with one M12x8 MALE connector (JR2-PRI), one M12x8 FEMALE connector (JR1-SEC), one SMA JACK GPS antenna connector, and one SMA-RP JACK CELL antenna connector, as previously shown in Figure 3.

Depending on the customer input/output requirements, there may be one or two cable harnesses supplied for the customer to connect to his field signals. The IO signals available in the Messenger are diagrammed as shown in Figure 4, which indicates how to connect field signals to the Messenger using these cables. Custom cable configurations can be made to facilitate field wiring. Contact Cattron at www.cattron.com/contact for assistance.

There are three IO signals that are user definable via on-board jumpers. The options for these user IO signals are shown in Table 2, Table 3 and Table 4. Their locations are shown in Figure 5.

Table 2: User IO 1 Jumper Selection – J11

User IO 1	J11
DOUT 1	1-2
P2-RS485A	2-3

Table 3: User IO 2 Jumper Selection – J10

User IO 2	J10
DOUT 2	1-2
P2-RS485B	2-3

Table 4: User IO 3 Jumper Selection – J9

User IO 3	J9
DOUT 3	1-2
AIN3	2-3

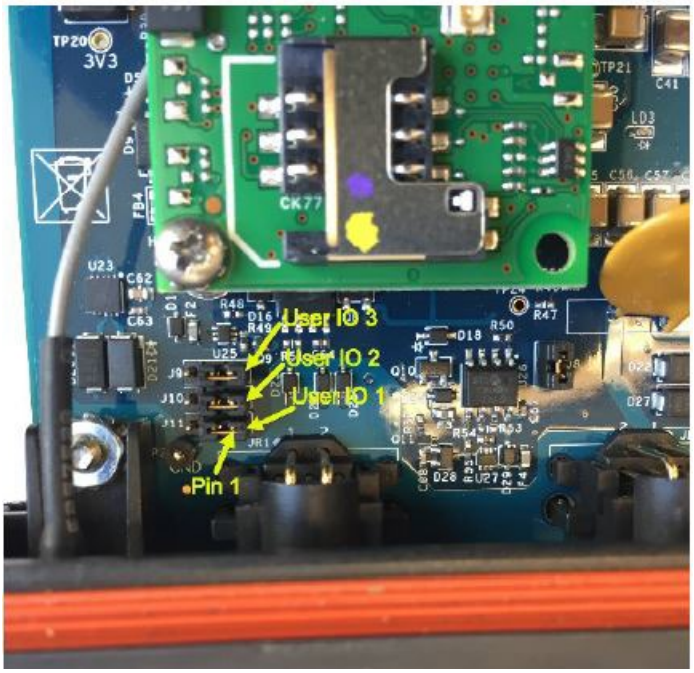

Figure 5: User IO Jumper Location

2.8 Cellular Setup

The Messenger supports two cellular technologies, HSPA (3G) and LTE (4G). The current offering for HSPA is a 3G penta-band capable radio. For LTE, it is a 4G, dual-band radio. Both of these radio options require a wireless account with a cellular provider such as AT&T or Verizon. The requirements for each option are shown in Table 5.

Table 5: Cellular Modem Requirements

Radio	Provider Options	Account Type	Static IP	SIM	APN	Username/ Password	Server IP/Port
HSPA (3G)	AT&T Verizon	Data+ SMS	required	required	required	optional	required
LTE (4G)	AT&T Verizon	Data+ SMS	required	required	required	optional	required

2.9 Bluetooth Setup

The Messenger uses a dedicated processor for facilitating Bluetooth Low Energy (BLE) connections. The hardware offers two antenna options: a chip antenna enabled by default and requiring no further hardware, and a U.FL connector for connecting external antennas for the potential of greater RF performance.

3 LED States

There is one tri-color LED visible to the user to indicate various system conditions, whose location is shown in Figure 6: Status LED Location. These conditions are conveyed to the user via LED color and blink patterns. Blinking of LEDs can be disabled via a configuration setting (see the Options Configuration – Type 2 section). On power-up, an LED test is performed by blinking all LEDs every second for 3 seconds. Following the LED test, the LEDs blink based on the conditions described below.

The number of blinks will range from one to three. The general philosophy when deciding behavior will be as follows:

- One blink will convey a state that the module is expected to be in most often (the “OK” state)
- Three blinks are used to convey that there is an issue that may need attention
- Two blinks are used as needed to convey a state that may be of interest to the user
- No blinks (LED solid on or off) indicates that the system is no longer functioning (first verify that the option to turn the LED off is disabled, and then contact Cattron at www.cattron.com/contact for assistance)

Status LED Behavior

The Status LED will cycle through blinking each color for the appropriate number of times to convey the state of the corresponding module, as shown in Table 6. There is a pause between color changes.

Table 6: LED Color/Blink Patterns

Module	Color	1 Blink	2 Blinks	3 Blinks
Power	Green	Power OK	----	Power fail (On Supercap)
Cell	Red	Data Queue Empty	Data Queue Not Empty	Fault / Failed to initialize modem
Bluetooth	Blue	Advertising On	Device Connected	Not advertising / No comms to nRF
CAN	Amber	CAN OK	----	No CAN

Figure 6: Status LED Location

4 IO Architecture

The IO architecture is shown in Figure 7. Each of the physical IO entities has a configuration that is set based on user requirements. Based on that configuration, the values sampled are stored in their respective data registers. These data registers are used to reference the corresponding value for use in channel creation or in expressions used to compute values. The complete list of available data registers can be found in Appendix B – Data Registers.

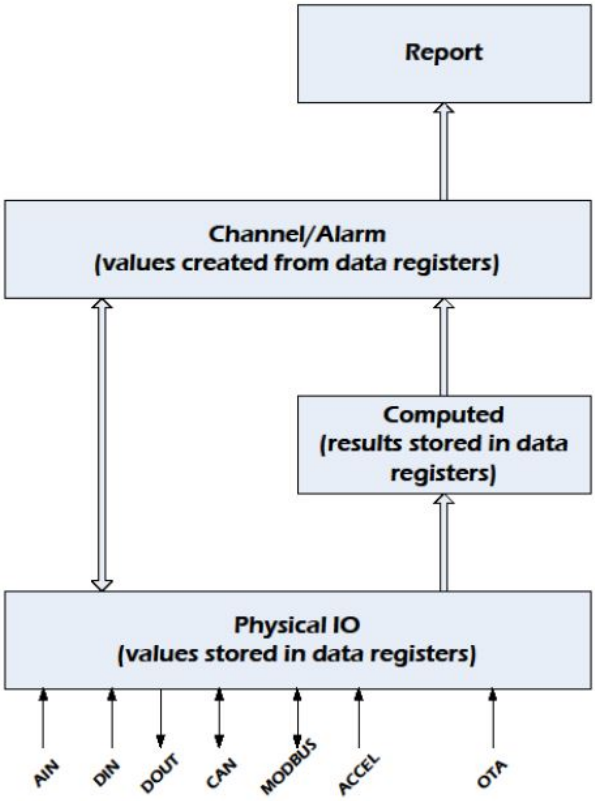

Figure 7: IO Architecture Diagram

5 Channels

The Messenger maps all monitored conditions into channels. Each channel has data storage and configuration parameters. Data storage holds current value, max/min values, and other run time data values. Configuration consists of user settable parameters that define rules on how the data values are to be processed (see the Channel Configuration – Type 9 section).

The data stored in a channel is user definable. In the channel configuration, the user can set the "source" of the data from a set of data registers. These data registers span all the possible IO in the system, i.e., CAN, MODBUS, physical, computed, etc. The complete list of available data registers can be found in Appendix B – Data Registers.

Every channel in the Messenger is referenced by a fixed channel number; for example, RPM is always channel 52. There is a set of predefined channels (numbers 1-300) and a set of user-defined channels (numbers 301-350). The user-defined channels can be configured to represent any data value in the system. The predefined channels have the data source parameter already set.

5.1 Predefined Channels

The channels outlined in Table 7 are predefined in the Messenger:

Table 7: Predefined Channels

Channel Number	Channel Name	Type	Source Data Register	Description
Start Digital Channels (data values are '0' or '1')				
1	Cell	Digital (System)	Internal	Status of cellular modem operation 1=fault 0=normal
2	Comm	Digital (System)	Internal	Status of any serial port used for communications with external device (MODBUS Master, Slave, or proprietary) 1=fault 0=normal
3	J1939	Digital (System)	Internal	Status of communications with engine bus (J1939) 1=fault 0=normal
4	User DIN1	Digital		If SWX4-1 closed: 0=open 1=ground applied If SWX4-1 open: 1=open 0=voltage applied

Channel Number	Channel Name	Type	Source Data Register	Description
21	User DIN2	Digital		If SWX4-2 closed: 0=input open 1=input grounded If SWX4-2 open: 1=input open 0=voltage > 3 VDC
5	User DIN3	Digital		If SWX4-3 closed: 0=input open 1=input voltage < 1 VDC If SWX4-3 open: 1=input open 0=input voltage > 3 VDC
6	User DIN4	Digital		If SWX4-4 closed: 0=input open 1=input voltage < 1 VDC If SWX4-4 open: 1=input open 0=input voltage > 3 VDC
9	Engine Run	Digital		Engine run state 1=on 0=off (run if RPM > start threshold)
10	Shutdown	Digital		CAN/J1587 Red LED Engine Shutdown Indicator
11	Warning	Digital		CAN/J1587 Amber LED Check Engine Indicator
20	GPS	Digital (System)		Status of GPS 1=fault 0=normal
30	User DOUT1	Digital		State of digital output 1 0=not energized 1=energized
31	User DOUT2	Digital		State of digital output 2 0=not energized 1=energized
32-39	Spare	Digital		Undefined
40	DPF Passive Regeneration Status	Digital		Support for tier 4 diesel engines

Channel Number	Channel Name	Type	Source Data Register	Description
41	DPF Active Regeneration Status	Digital		Support for tier 4 diesel engines
42	DPF Active Regeneration Inhibit Status	Digital		Support for tier 4 diesel engines
43	DPF Active Regeneration Inhibit Switch	Digital		Support for tier 4 diesel engines
44	DPF Active Regeneration Inhibit Temp Lockout	Digital		Support for tier 4 diesel engines
45	DPF Active Regeneration Inhibit Perm Lockout	Digital		Support for tier 4 diesel engines
46	DPF AutoAct Regeneration Config	Digital		Support for tier 4 diesel engines
47	DPF1 Cond Not Met For Regeneration	Digital		Support for tier 4 diesel engines
48-50	Spare	Digital		Undefined
Start Analog Channels (data values are floating point, precision is user configurable)				
51	Fuel Level	Analog		Fuel Level, 0-100%
52	Eng RPM	Analog		Engine speed, RPM
53	Eng HRS	Analog		Accumulated engine run time (hours)
56	Coolant Temp	Analog		In degrees C
57	Battery	Analog		Volts reading
58	Electrical	Analog		Volts reading
59	Oil Pressure	Analog		Oil pressure in psi
60	Fuel Rate	Analog		In gallons per second
62	User Analog	Analog		On-board analog input, 10-bit ADC can be configured for 0-1, 0-5, 0-10 VDC, or 0-20 mA
79	Vehicle Distance	Analog		Total distance vehicle has travelled, odometer
81	Engine Starts	Analog		Accumulated count of engine starts
82	Idle Time	Analog		Accumulated time the engine RPM has been between the Engine Start Threshold and Idle Threshold (seconds) since last start
83	Idle Fuel	Analog		Accumulated fuel used during Idle Time (gallons)

Channel Number	Channel Name	Type	Source Data Register	Description
84	Work Time	Analog		Accumulated time the engine RPM has been above the Idle Threshold (seconds) since last start
85	Work Fuel	Analog		Accumulated fuel used during Work Time (gallons)
86	Daily Idle Time	Analog		Accumulated Idle Time for the day
87	Daily Idle Fuel	Analog		Accumulated Idle Fuel for the day
88	Daily Work Time	Analog		Accumulated Work Time for the day
89	Daily Work Fuel	Analog		Accumulated Work Fuel for the day
90	Oil Level	Analog		In percent
91	Oil Temp	Analog		In degrees F
92	Coolant Level	Analog		In percent
95	Throttle Position	Analog		In percent
96	Road Speed	Analog		In MPH
105	Barometric Pressure	Analog		Ambient pressure in psi
106	Cabin Temperature	Analog		In degrees F
107	Ambient Temperature	Analog		In degrees F
108	Accelerator Pedal Position	Analog		In percent
109	Air Filter Diff. Pressure	Analog		In psi
110	Engine Load	Analog		In percent
111	Engine Torque	Analog		In percent
118	Daily Distance Traveled	Derived		Accumulated distance travelled for the day
119	Daily Fuel Used	Derived		Accumulated fuel used for the day
120	Trip Distance Traveled	Derived		Accumulated distance travelled for last trip (trip defined as engine on to engine off)
121	Trip Fuel Used	Derived		Accumulated fuel used for last trip (trip defined as engine on to engine off)
151	Engine Fuel Temp	Analog		In degrees F
152	Estimated Fan Speed	Analog		In percent
153	Transmission Oil Temp	Analog		In degrees F
154	Daily Flow Volume	Derived		Accumulated flow volume for the day (flow rate from ADC input)
155	Running Flow Volume	Derived		Accumulated flow volume since last volume reset (flow rate from ADC input)

Channel Number	Channel Name	Type	Source Data Register	Description
250	Generator, Total kW Hours Export	Analog		In KWh
Channels specific to Generators are available on Request Only				
251	Generator, Total Reactive Power	Analog		In KVAR
252	Generator, Overall Power Factor	Analog		
253	Generator, Total Real Power	Analog		In kW
254	Generator, Average Line-Line AC RMS Voltage	Analog		In V
255	Generator, Average Line-Neutral AC RMS Voltage	Analog		In V
256	Generator, Average AC Frequency	Analog		In Hz
257	Generator, Average AC RMS Current	Analog		In A
258-259	Spare			Undefined
260	DPF1 Soot Load	Analog		Support for tier 4 diesel engines
261	DPF1 Ash Load	Analog		Support for tier 4 diesel engines
262	DPF1 ET Regen	Analog		Support for tier 4 diesel engines
263	AT1 DPF Regen Threshold	Analog		Support for tier 4 diesel engines
264	DPF2 Soot Load	Analog		Support for tier 4 diesel engines
265	DPF2 Ash Load	Analog		Support for tier 4 diesel engines
266	DPF2 ET Regen	Analog		Support for tier 4 diesel engines
267	AT2 DPF Regen Threshold	Analog		Support for tier 4 diesel engines
268	DPF Lamp Cmd	Analog		Support for tier 4 diesel engines
269	DPF Status	Analog		Support for tier 4 diesel engines
270	Exh High Temp Lamp Cmd	Analog		Support for tier 4 diesel engines
271	Eng Trip Fuel	Analog		Support for tier 4 diesel engines
272	Eng Total Fuel	Analog		Support for tier 4 diesel engines
273	AT1 Def Tank Level 1	Analog		Support for tier 4 diesel engines
274	AT1 Def Tank Level 2	Analog		Support for tier 4 diesel engines
275	AT Cat Reduction Active	Analog		Support for tier 4 diesel engines
276	Eng Wait Start Lamp	Analog		Support for tier 4 diesel engines

Channel Number	Channel Name	Type	Source Data Register	Description
277	Eng Protect Shutdown	Analog		Support for tier 4 diesel engines
278	Eng Protect Near Shutdown	Analog		Support for tier 4 diesel engines
279	Eng Protect Cool Level Status	Analog		Support for tier 4 diesel engines
290-300	Spare			

Start User-Defined Analog Channels				
301-350	User-Defined	User Defined		Analog or Digital channels

5.2 Channel Data

All values read from physical IO, an engine bus or from a Modbus slave device are continually updated and tested as defined by the configuration parameters. For each channel, based on its type (analog or digital), there is a basic set of data collected. For purposes of discussion, the term “not normal” is used to indicate an analog value that has violated a limit threshold or a digital value that does not match its configured ‘normal’ state.

Basic Data Set -

For the analog channels:

- Current value
- Max/min values (daily)

For the digital channels:

- Current value
- Previous value
- Count of transitions to not normal (in counts)
- Accumulated time in not normal state (in seconds)

There are a few channels that can be configured for special functions. All the physical digital input channels can be configured to accept pulse inputs (e.g., from a flow meter) and the physical analog inputs can be used to totalize volume when the input is a flow rate. These channels have an extended data set.

Extended Data Set -

For the analog channels:

- Daily total volume (available on channel 154)
- Continuous running total volume (available on channel 155)

For the digital channels:

- Flow rate
- Daily total volume
- Continuous running total volume

The Messenger also maintains two other complete sets of channel data – trip data and daily data.

A trip is defined as the time from engine start to engine stop, independent of distance traveled. During that time, a separate set of current and max/min values are maintained. At engine stop, an end of trip report is generated from this data.

The daily data set is a separate set of current and max/min values that span the 24 hour period from midnight to midnight, UTC time. At midnight, an end of day report is generated from this data.

Because Modbus channel data is polled, Modbus digital channels do not maintain count or duration values.

6 SMS Text Commands

The Messenger can receive and execute SMS commands to perform specific functions. The SMS command set includes the following:

- ADIPREQ – request to connect to remote diagnostic utility
- ACTION – on-demand action request

6.1 Command Syntax

The commands can be upper case, lower case or a combination, as illustrated here:

- ***<ADIPREQ(ip,port,s)>*** - request sent to Messenger to connect to remote diagnostic utility; contact Cattron at www.cattron.com/contact for assistance

  ip = IP address of PC that the diagnostic utility is running on

  port = port number on the PC that the IP address is bound to

  s = spare (leave blank)

- ***<ACTION(x)>*** - request to execute action identified by action number

  x = action number, as defined in Table 8

Table 8: Action Commands

Action Number	Action Description	Response
1	Generate on-demand standard report to host server	ack+ report
2	Return status to sender	status
3	Force cell modem reset	ack
4	Clear all stored data records	ack
5	Return Cell config to sender	cell config
6	Force digital output 1 on	ack
7	Force digital output 1 off	ack
8	Generate on-demand end of day report to host server	ack+ report
9	Return current GPS coordinates to sender	coordinates
10	Return a subset of channel data values to sender (Channels are fixed and include RPM, Engine Hours, Coolant Temp, Battery Voltage, Oil Pressure and Odometer)	data values
13	Clear oldest data record from queue	ack
16	Force digital output 2 on	ack
17	Force digital output 2 off	ack
24	Reset/restart Peer poll/push	ack
26	Force exit of mini-ping mode	ack
28	Zero all non-volatile counter data	ack
30	Return SIM card info	SIM info

Action Number	Action Description	Response
32	Clear ADC channel daily flow totals	ack
33	Clear ADC channel running flow totals	ack
35	Return CELL Status	CELL status
40-43	OEM Specific	
50-55	Initiate Modbus control sequence	
99	Force Hardware Reset	ack

Action Responses:

ack text:

v: r: c

status text:

VID(v)-CELL(i s)-REG(r g)-RSSI(#)-GPS(p)-JBUS(j m n)-DATAQ(d e f)-OUTP(a b)-SWX(x)-MSGS(f c)-VER(v#.#.# date prot modem jbus)

VID: v = vehicle ID

CELL: i = init state

s = current state

REG: r = tower registration

g = data registration

RSSI: # = signal strength

GPS: p = 1 for fix, 0 for no fix

JBUS: j = J1939

m

n

DATAG: d = count in queue

e = deleted from queue

f = failed

OUTP: A

B

SWX

MSGS: f = failed

c = count

VER: prot = protocol (Antx, Rastrac, other)

modem = type of modem

jbus = type of bus

coordinates text:

VID(v)-LAT(s)-LON(g)-STATUS(u)-AGE(p)-ANT(j)

SIM info text:

VID(v)-MSISDN(s)-ICCID(g)-IMSI(u)-IMEI(p)

data text:

VID v-Running: s-52 RPM: r-x Hours: h- CoolTemp: x-Battery -OilPress -Odometer o

7 Modbus

The Messenger can be configured as a Modbus Master, Modbus Slave or both. This is done by setting the Mode of one of the available user serial ports, 5 or 6. Both ports support RS485 only. If RS232 is required, an RS485 to RS232 adapter will need to be inserted.

7.1 RTU Slave

Being configured as a Modbus RTU Slave device allows SCADA/HMI software to read channel values from the Messenger. Setting up a serial port is the only configuration necessary to enable Modbus Slave operation.

Also available is writing values to the Messenger from a MODBUS Master. These written values can then be transferred to a channel for alarming or logging for telemetry.

The Modbus register map for all channel data values is available on request; contact Cattron at www.cattron.com/contact for additional information and reference the document “MessengerBLE MODBUS Slave”.

7.2 RTU Master

When configured as a Modbus RTU Master device, the Messenger reads register values from Modbus Slave devices.

In addition to setting up a Modbus Master serial port, the MODBUS data registers in the Messenger must be configured to receive the values read from the slave device. As shown in the Channel Configuration – Type 9 section, define the Modbus Slave address, the register data type to read, the register number, how to interpret or scale the data being read, and any alarm limits.

8 Debug Menu

The debug menu is a text based menu system accessible via terminal emulation software running on a PC (such as Tera Term or HyperTerminal) or via a PC based utility that connects to the Messenger OTA via TCP. Debug menus allow the user to view or change configuration parameters, view data values and history logs, see communications between CPU and attached peripherals, and to clear accumulated data values or logs.

The Debug Menu can be accessed via a direct serial RS232 connection to Port 2, Port 3 or Port 4, or via an over the air connection using the ADIP remote diagnostic utility. This utility is available on request; contact Cattron at www.cattron.com/contact for additional information. DIP Switch 3, as described in Table 1, can be used to force a direct connect serial port into Debug mode.

Note: Once connected, press the 'Enter' key to see the Main Menu (example below).

```
Messenger : ANTX G2 J1939
Version : v6.4.2 A 09/26/15
Date/Time : 11/10/15 14:24:03
Asset ID : 011998000279820
MSISDN : 15332791849
Local IP : 10.115.17.6
CELL RSSI : 13 (13,12)
GPS : Fix Ok
QueDepth : 0
Output 1 : Off
Output 2 : Off

1) View Config
2) Timers
3) Data
4) Events
5) Reports
6) Setup
7) Maint
8) J1939 Diags

Cmd =>
```

Most menu navigation commands are single alpha-numeric entries, no carriage return (Enter) required. However, when modifying configuration parameters, the configuration string entered must be followed by a carriage return (Enter).

9 Configuration

The Messenger is a highly configurable platform with several methods in place to allow a user to read and/or modify the whole configuration or any part of it. All configuration parameters are stored in non-volatile memory.

Configuration parameters can be changed using the following methods:

- User modify via debug menu, using direct RS232 serial
- User modify via debug menu, using remote diagnostic utility
- Transfer configuration file, using XMODEM-1K over direct RS232
- Transfer configuration file via remote diagnostic utility
- Transfer configuration file via FTP
- User read/modify via SMS text message

All configuration parameters are read/written using text strings, with commas to separate values in the string. This basic format is the same for all of the methods listed above. Some of the methods put a “wrapper” around the configuration line to aid in transport and decoding on the receiving end.

The basic configuration line (CL) format is described below:

CL = x,<i,>y,zzzz,y,zzzz,y,zzzz,…,y,zzzz

where:

- The commas are required as the delimiter between value fields
- *x* is a unique number identifying the configuration line type (e.g., Site=1, Serial=6, Channel=9, etc.)
- *<i,>* is an optional index used with specific configuration line types that have more than one element (e.g., there is more than one Serial Port and more than one Channel)
- *y* is a parameter code identifying the configuration parameter that follows
- *zzzz* is the configuration parameter (this parameter could be an integer, a floating point number or a text string, as defined by the parameter code *y*)

Table 9 identifies the available configuration line types and their type code.

Table 9: Configuration Line Types

Type Code	Reference	Description	Optional Index
1	Site	Messenger global settings	None
2	Options	System Options settings	None
3	Cellular	Cellular communication settings	None
4	FTP	FTP settings	None
5	Geofence	Geofence definitions	Geofence Number Range 1-10
6	Ports	Serial port parameters	Serial Port Number Range 1-6
7	Reports	Defines how/when updates are sent to the host server	None
8	Engine	J1939/J1708/OBDII parameters/settings	None

Type Code	Reference	Description	Optional Index
9	Channels	Set scaling and alarm parameters for channels	Channel Number Range 1-400
10	Expressions	Mathematical expressions	Expression Index Range 1-10
11	Analog Inputs	Physical analog inputs	ADC input Range 1-6
12	Report Flags	Defines data types to include in reports to the host server	Channel Number Range 1-400
13	Digital Outputs	Physical digital outputs	Digital Output Range 1-3
14	J1939 SPN	Parameters specific to PGNs on a J1939 bus	SPN Index Range 1-XX
15	J1939 PGN	Parameters specific to PGNs on a J1939 bus	PGN Index Range 1-XX
16	Date/Time	Set Date/Time manually	None
17	Digital Inputs	Physical digital inputs	Digital Input Range 1-4
18	MODBUS	MODBUS Poll Parameters	MODBUS Index Range 1-100
20	Engine Control	Access to panel engine control parameters	None
25	MODBUS Control Sequence	MODBUS Control Sequence Definition	Sequence Number Range 1-6
28	Peer Poll		Peer Index Range 1-16
29	Peer Push		Peer Index Range 1-16
30	VFD	VFD Parameter Setup	None
40	Virtual Channel	Virtual channel configuration parameters	Virtual Channel Index Range 1-40
96	FOTA	FOTA configuration for updating cellular modem firmware	None

9.1 Debug Configuration Commands

Users can manage the current configuration via the built-in Debug Menu system. From the main menu, select *Site Setup* (6). From *Site Setup*, select *User Input* (1). From the *User Input* prompt, the following read/modify commands are applicable.

9.1.1 Read Command

This is the read configuration command format:

255,x<,i><CR>

where:

- *255* is the read command
- *x* is the configuration line type code
- *<,i>* is an optional index that is a function of the line type code (see Table 9 in Section 9)
- *<CR>* is a line terminating carriage return

Some examples using the READ command:

Examples:	
255,1<CR>	Prints Site config
255,8<CR>	Prints Engine config
255,6,1<CR>	Prints Serial Port 1 config
255,6,255<CR>	Prints all Serial Port configs
255,255<CR>	Prints a Full System config

By issuing the “255,255” command, the user can capture a complete system configuration to a file. This file can then be used as the master configuration file. This master config file can then be modified and loaded back into the system or any configuration segment that needs updating.

Some examples using the READ command via SMS:

Examples:	
<config(255,1)>	Returns Site config
<config(255,8)>	Returns Engine config
<config(255,6,1)>	Returns Serial Port 1 config
<config(255,6,255)>	Invalid SMS Read command
<config(255,255)>	Invalid SMS Read command

⚠	**CAUTION**
	THE READ ALL COMMAND (255,255) DOES NOT FUNCTION VIA SMS DUE TO SMS MESSAGE SIZE CONSTRAINTS.

9.1.2 Reset Command

To reset a configuration to factory defaults, use the following command format:

256,x<,i><CR>

where:

- *256* is the reset command
- *x* is the configuration line type code
- *<,i>* is an optional index that is a function of the line type code (see Table 9 in Section 9)
- *<CR>* is a line terminating carriage return

Some examples using the RESET command:

Examples:	
256,1<CR>	Reset Site config
256,8<CR>	Reset Engine config
256,6,1<CR>	Reset Serial Port 1 config
256,6,256<CR>	Reset all Serial Port configs
256,256<CR>	Reset System config

⚠	**CAUTION**
	THE RESET ALL COMMAND (256,256) SHOULD BE USED WITH CAUTION. ALL COMMUNICATIONS WITH THE UNIT COULD BE LOST.

9.1.3 Global Command

The global command can be used to set the same parameter, within the same configuration type, for consecutive indexes, to the same value. The global command only works with Geofence, Channel and Report Flag configuration types.

The global command format is:

257,x,i-j,y,zzzz<CR>

where:

- *257* is the global write command
- *x* is the configuration line type code
- *i* is a required starting index
- *j* is a required ending index, greater than *i*

Note: The range of indexes from *i* to *j* is inclusive and by definition are sequential.

- *y* is a parameter code identifying the configuration parameter that follows
- *zzzz* is the configuration parameter (this parameter could be an integer, a floating point number or a text string, as defined by the parameter code *y*)

Some examples using the GLOBAL command:

Examples:	
257,9,12-20,2,2<CR>	For channels (9) 12-20 inclusive, change the channel mode (2) to “Call On Alarm” (2)
257,12,52-88,4,2<CR>	Change the report flags (12), for channels 52-88 inclusive, in the end of day report (4), to include data type 2 (2)

9.2 OTA Configuration Commands

9.2.1 OTA Command

The protocol for sending/receiving configurations OTA is covered in detail in the protocol document “M09-PRTCLxxx”. A configuration line sent OTA from a host-based server application will have the following basic format:

|*258,CL*|

CL is the configuration line as defined earlier in this section.

9.2.2 SMS Command

Sending configuration changes via SMS is covered in the SMS Text Commands section. When a configuration line is sent via SMS message, it will have the following basic format:

<config(CL)>

For all other methods listed above, the configuration line will have the following format (Configuration Line terminated by a CR character):

CL<CR>

9.3 Site Configuration – Type 1

Parameters for Site Configuration			
Parameter Code	**Reference**	**Description**	**Default**
1	Site Name	Site name to uniquely identify this unit. ASCII Text, 30 characters max	"Site Name"
2	Daylight Saving	Used to adjust local time for daylight saving. Local time is used for timestamp of events and display of date/time in debug menu. 0 = disabled 1 = enabled	Enabled [1]
3	Time Zone	Defines local time zone for the Messenger. For display and event log timestamps. Range 0-7: 0 = UTC 1 = Atlantic 2 = Eastern 3 = Central 4 = Mountain 5 = Pacific 6 = Alaska 7 = Hawaii	Central [3]
4	Next Call Delay	This delay is enforced between successive attempts to connect and send data to host server. Range 1-32000 seconds	10
5	Enter Low Power Mode	This is the delay to enter low power mode. Range 60-3600 seconds	240
6	Exit Low Power Mode	This is the delay to exit low power mode. Range 10-1440 minutes	60
7	Modbus Poll Mode	This defines how the unit polls a MODBUS slave for registers. 0 = single register per poll 1 = multiple registers per poll	1
8	Modbus Scan Rate	This defines how often the Messenger polls MODBUS slave devices. Range 0-3600 seconds 0 = no delay between successive polls	5
9	GPS Delta Radius	Used to generate a GPS location delta report. Range 0-5280 ft	200 ft

Parameters for Site Configuration			
Parameter Code	**Reference**	**Description**	**Default**
10	Vin Watchdog Threshold	This threshold sets the point at which the power ADC channel watchdog trips and enables supercap discharge. Range 8.0-32.0 V	10.8 v
11	Get Time Method	Determines the method for getting the system time. Range 0-4: 0 = Internet (NTP server) 1 = Cell Modem 2 = GPS 3 = BLE 4 = None (User input)	Cell [1]

9.4 Options Configuration – Type 2

A value of 0 will disable the option and a value of 1 will enable the option, unless otherwise noted.

Parameters for Options Configuration			
Parameter Code	**Reference**	**Description**	**Default**
1	Low Power Operation	[0-1]	0
2	Accumulate engine run hours from engine run state	Engine run time is computed instead of reading it from engine bus. When Run Hours is not available on the bus, enable this option to compute run hours. There is a preset in the Engine Configuration to allow run hours to match the last known run time.	0
3	Turn off all LEDs except System	[0-1]	0
4	Add Msg Checksum	Add checksum to data records sent to host server.	0
5	Set RTC From GPS	If enabled, will set the system clock from the GPS clock. The AUTO TIMESET parameter in the cell config will set the system clock from an internet time server. Enable only one of these parameters.	0
6	Use DIN1 as Engine Run signal	[0-1]	0
7	No diagnostic reporting	When disabled, engine diagnostic data from the engine bus is not transferred to the host server.	0
21	Use instantaneous GPS reading vs averaged GPS reading	1 = enable 0 = disable	0
25	Compute distance traveled from vehicle speed	[0-1]	0
26	Enable mini-ping recovery		0
29	Disable reporting of GPS data	When GPS data is not relevant to the application, disabling reduces the size of the messages to the host server.	0

9.5 CELL Configuration – Type 3

These configuration parameters apply to both HSPA (3G) and CDMA (2G) radios, unless otherwise noted.

Parameters for Cellular Configuration			
Parameter Code	**Reference**	**Description**	**Default**
1	Vehicle ID	Unique identifier used in every message transaction with host server. When blank, the IMEI/MEID of the modem is used. Otherwise, characters entered here will serve as the message identifier. ASCII Text, 30 characters max	blank
2	Acknowledge Type	Defines the handshake between the system and the host server when sending messages. Range 0-2: 0 = Messages are sent and no ACK response expected 1 = When the system sends a message it waits for an ACK response from the host server 2 = A fixed offset (10000) is added to an event code to indicate to the host server that the system is expecting an ACK response	1
3	Auto Time Set	Enables setting of the system clock (RTC) via internet time servers. If enabled, time is checked at power on and then daily at 1 AM. 0 = disable 1 = enable	1
4	PING Rate	Defines the interval the system sends a short “keep alive” message to the host server. Used to help keep the connection between the cellular modem and the host server active. Range 0-1440 minutes 0 = disabled	0
5	Carrier	Some modems allow selection of carrier: AT&T or Verizon. A matching SIM is required. Range 0-1: 0 = AT&T 1 = Verizon	
6	Host Server Protocol	Used to select the TCP/IP protocol between the system and the host server. 0 = UDP 1 = TCP	UDP [0]

Parameters for Cellular Configuration			
Parameter Code	**Reference**	**Description**	**Default**
7	Primary Host Port Number	Defines port number of primary host. Range 0-65535	Order specific
8	Primary Host IP Address	Defines IP address of primary host server. 127 characters max Can be entered in DNS or dotted decimal format.	Order specific
9	Secondary Host Port Number	Defines port number of secondary host. Range 0-65535	Order specific
10	Secondary Host IP Address	Defines IP address of secondary host server. 127 characters max Can be entered in DNS or dotted decimal format.	Order specific
12	APN	63 characters	
13	Username	63 characters	
14	Password	63 characters	
17	Local Port	Defines the local port number to use when connecting to a host server. Range 0-65535	605
18	Max SMS		4
19	SMS 911 Number		blank
21	Host Server Type	0 = Primary Only 1 = Secondary Only 2 = Redundant (switches between primary and secondary servers on a communication failure with either)	Primary [0]

9.6 FTP Configuration – Type 4

These configuration parameters are used in communications with an FTP server. They apply to both HSPA (3G) and LTE (4G) radios.

Parameters for FTP Configuration			
Parameter Code	**Reference**	**Description**	**Default**
1	Report Type	Report types that can be requested on demand from Over the Air or SMS. put = to FTP server get = to Messenger	
		24 = put data log (***.dat.txt) 25 = put event log (***.evt.txt) 26 = get binary code image 27 = get config file 28 = put config file (***.cfg.txt)	
		Filenames for Put commands are automatically generated as: <vehicleID><mmddyyhhmm>.<ext>.txt For example: MyTruck0301081322.cfg.txt	
2	Put path on server	63 characters For example: ./msngr/elogs/	
3	Get path on server	63 characters For example: ./msngr/elogs/ or ./ for the root directory	
4	Get filename	63 characters For example: MyEventLog.txt	blank
5	Report Rate	Frequency in minutes. If this is a value greater than 0, then any reports via cellular will not occur. FTP takes precedence.	
6	FTP Server Port Number	Port number FTP server uses for file transfer.	21
		Range 0-65535	
7	FTP Server IP Address		Customer specific
		127 characters max Can be entered in DNS or dotted decimal format	
8	Login username	63 characters	
9	Login password	63 characters	
10	Transfer Mode	0 = active FTP server 1 = passive	1

9.7 Geofence Configuration – Type 5

A geofence defines a geographical boundary, using GPS coordinates to construct a virtual barrier. If this boundary is crossed, the Messenger generates a fence notification event indicating the position of the vehicle relative to the boundary, inside or out. The Messenger supports up to 10 fences. A rectangular geofence is defined by two corners of a rectangle, top left and bottom right. A circular geofence is defined by a center and a radius.

Parameters for Geofence Configuration			
Parameter Code	**Reference**	**Description**	**Default**
1	Type	Defines the geometry of the geographical boundary. 0 = disabled 1 = rectangular 2 = circular	Disabled [0]
2	Top Left Latitude	Top left corner of rectangle, latitude. Range -90.000000 to +90.000000 deg	
3	Top Left Longitude	Top left corner of rectangle, longitude. Range -180.000000 to +180.000000 deg	
4	Bottom Right Latitude	Bottom right corner of rectangle, latitude. Range -90.000000 to +90.000000 deg	
5	Bottom Right Longitude	Bottom right corner of rectangle, longitude. Range -180.000000 to +180.000000 deg	
6	Center Latitude	Center of circle, latitude. Range -90.000000 to +90.000000 deg	
7	Center Longitude	Center of circle, longitude. Range -180.000000 to +180.000000 deg	
8	Radius	Radius of circle. Range 0.0-1000.0 miles	

9.8 Serial Port Configuration – Type 6

The Messenger has six serial ports (1-6), as follows:

- Port 1 is dedicated to the on-board cellular modem

	CAUTION
	DO NOT MODIFY THE PARAMETERS OF PORT 1.

- Port 2 is dedicated to the debug function. It is only available via an internal connection and requires a TTL->RS232 converter
- Port 3 is dedicated to communications with the internal Bluetooth processor
- Port 4 is dedicated to communications with the internal GPS module
- Port 5 is user port 1, available as RS485 only
- Port 6 is user port 2, available as RS485 only

	CAUTION
	NOT ALL PARAMETERS SHOWN BELOW APPLY TO EVERY PORT.

Parameters for Serial Port Configuration			
Parameter Code	**Reference**	**Description**	**Default**
1	Enable	Use to enable/disable the port. 0 = disables 1 = enables	Port Specific
2	Mode	Defines the port function. Range 0-2: 0 = none 1 = MODBUS RTU Master 2 = MODBUS RTU Slave	Port Specific
3	Modbus Slave ID	This sets the Slave ID of the unit when the port mode is set to MODBUS RTU Slave. Range 1-247	126
4	Baud	Defines the port baud rate. Valid baud rates: 1200 2400 4800 9600	57600

Parameters for Serial Port Configuration			
Parameter Code	**Reference**	**Description**	**Default**
		19200 38400 57600 115200	
5	Max Idle	Defines the period of inactivity, after reception has started, before the active receive buffer is closed. Range 1-32000 ms	5
6	Response Timeout	Maximum time to wait for a response. Range 1-60 seconds	2
7	RS485 pre-tx delay	Defines the duration of time between enabling the RS485 transmitter and starting transmission. Range 0-31 bit times	16
8	RS485 post- tx delay	Defines the duration of time after transmission of the last character to disabling the RS485 transmitter. Range 0-31 bit times	16
9	Data Bits	Defines the number of data bits in the serial stream. **Note:** If parity is set to even or odd, number of data bits must be set to 9. Range 7-9	8
10	Stop Bits	Defines the number of stop bits in the serial stream. Range 1-2	1
11	Parity	Defines parity for the serial stream. Range 0-2: 0 = none 1 = odd 2 = even	None [0]

9.9 Reporting Configuration – Type 7

The reporting parameters allow user control over when and why a report is generated. There are two basic report types, standard and exception. The standard report is time based and is generated at the Standard Report Interval. An exception report has to be triggered and, once triggered, is generated at the Exception Report Interval for as long as the trigger is true. Some examples of exception triggers are speed over ground and RPM. The channel data to include in a Standard or Exception Report are defined using Report Flag Configuration – Type 12.

Parameters for Reporting Configuration			
Parameter Code	**Reference**	**Description**	**Default**
1	End of Day Offset	Offset from midnight for end of day report. Range 0-1440 mins	
2	End of Day Rate	Interval between end of day reports. Range 0-1440 mins 0 disables end of day reports	1440
3	Standard Report Rate	Defines the interval at which Standard Reports are generated. Range 0-1440 minutes 0 disables standard reports	60
4	Speed Over Ground Threshold	Defines the vehicle speed necessary to trigger exception reporting. Range 0.0-200.0 MPH 0.0 disables the speed over ground trigger	0.0
5	Course Over Ground Threshold	Defines the minimum change in direction necessary to generate an event. This event is generated solely on a change in direction and the vehicle must be moving to qualify. Range 0.0-200.0 degrees 0.0 disables course over ground events	0.0
6	Distance Over Ground Threshold	This defines the distance interval to generate an event. Range 0.0-250.0 miles 0.0 disables the distance over ground event	0.0
7	RPM Threshold	Defines the engine RPM necessary to trigger exception reporting. Range 0.0-8000.0 RPM 0.0 disables the RPM trigger	1000.0
14	Protocol Delimiter Character	This defines the delimiter character used in the reporting protocol. This will be specific to a particular host server application. Reference the protocol document “M09-PRTCLxxx”.	124 (‘|’ - pipe character)

Parameters for Reporting Configuration			
Parameter Code	**Reference**	**Description**	**Default**
		Entered as a numeric value. Restrictions: 1) cannot be a letter of the alphabet 2) cannot be a number 3) cannot be the same as the start message character 4) cannot be one of these characters: space, percent, plus, comma, minus, decimal, null	
15	Protocol Start Message Character	This defines the start of message character used in the reporting protocol. This will be specific to a particular host server application. Reference the protocol document “M09-PRTCLxxx”.	0 (null character)
		Entered as a numeric value. Restrictions: 1) cannot be a letter of the alphabet 2) cannot be a number 3) cannot be the same as the protocol delimiter character 4) cannot be one of these characters: space, percent, plus, comma, minus, decimal 5) a null character removes the start message character 6) cannot be a control character (delete, or any character less than a space (0x20) character)	
17	Vehicle Stopped Threshold	This defines the continuous time a vehicle must be stopped, after moving, to generate an event.	0
		Range 0-60 minutes 0 disables the vehicle stopped event	

9.10 Engine Configuration – Type 8

The Messenger can be used to monitor values presented on a J1939 CAN bus.

Parameters for Engine Configuration			
Parameter Code	**Reference**	**Description**	**Default**
1	Messenger CAN Address	Range 1-255	129
2	ECM CAN Address	Range 0-255	0
16	Panel CAN Address	Range 0-255	128
20	CAN Baud	Range 125, 250, 500	250 K
3	DM1 Conversion Method	Range 1-4	1
4	Total Engine Hours Preset	If the Messenger is configured to track engine run time, use this number to preset the hours to match actual run hours. Range 0.0-999999.0 hours (to the nearest tenth of an hour)	0.0
5	Engine Starts Preset	The Messenger automatically counts engine starts. Use this number to preset starts to match actual starts. Range 0-999999	0
6	Engine Start Speed	The engine enters the “started” state when the measured RPM exceeds this threshold. Range 50.0-2000.0 RPM	500.0
7	Engine Idle Speed	This threshold defines two states once the engine has started, idle and work. If the RPM is less than or equal to this threshold, the engine is idling; else, the engine is working. Range 100.0-2000.0 RPM	700.0
8	Idle Exception Limit	If the engine is in the idle state for this continuous duration of time, an idle exception event is reported. Range 0-360 minutes 0 disables testing for idle exception	10
11	Max DTC Count	Defines the maximum number of times the same DTC will be reported.	0

Parameters for Engine Configuration			
Parameter Code	**Reference**	**Description**	**Default**
		Range 0-126 0 disables reporting of all DTCs	
12	Odometer Preset	If the Messenger is configured to compute odometer (distance travelled), use this number to preset the computed odometer to match the actual odometer. Range 0.0-9999999.0 miles	0.0
17	Fuel Theft Delta	If the fuel level drops by more than this delta, over a fixed time, an event is generated. Fuel Level must be available on the engine bus. If the level drops more than this delta in 5 minutes, the testing interval goes to 1 minute. Must then get four consecutive violations to generate an event. Range 0.0-100.0 percent 0.0 disables fuel level detection	0.0
50	Low Pressure Shutdown - Minimum Speed	Range 0-4000 RPM	1100
51	Low Pressure Shutdown - Minimum Pressure	Range -15 to 200 psi	10
52	Low Pressure Shutdown - Minimum Time	Range 1-600 seconds	5
53	Low Pressure Shutdown - Method	Range 0-4 0 = none 1 = digital output 1 2 = digital output 2 3 = override to stop CAN command (follows shutdown profile) 4 = E-stop CAN command (hard stop)	0

9.11 Channel Configuration – Type 9

Parameters for Analog Channel Configuration (channel numbers 51-300 are predefined analog channels)			
Parameter Code	**Reference**	**Description**	**Default**
1	Name	A representative name by which to reference the channel. ASCII Text, 30 characters max	Channel Specific
2	Mode	Defines operating mode of channel. 0 = disabled 1 = Status Only (value is monitored, no testing of value against limits) 2 = Report on Alarm (value is monitored and tested against limits; value is also tested against delta threshold) 3=Report On Delta (value tested against delta threshold only)	<channel dependent>
3	Alarm Delay	The continuous time the value must exceed a limit before it is considered to be in violation of that limit. Range 0-65535 seconds 0 = no delay time, immediate alarm	<channel dependent>
22	Source Data Register	This defines the source register of the value for this channel. See Appendix B – Data Registers.	<channel dependent>
30	Delta Threshold	The difference between the current value and the value that previously caused a delta (reference value) must exceed this threshold to generate a report of this value to Trihedral. On a delta event, the current value becomes the new reference value for the next delta. Range 0-999999	<channel dependent>
32	Delta Debounce	The continuous time the delta must exceed the delta threshold in order to generate a delta event. Range 0-3600 secs	<channel dependent>
	Alarm Output Data Register	An output data register that can be set when this channel goes into alarm, referenced as a data register. See Appendix B – Data Registers.	Disabled [0]
	Output State on Normal		0 – deactivate

Parameters for Analog Channel Configuration (channel numbers 51-300 are predefined analog channels)			
Parameter Code	**Reference**	**Description**	**Default**
		Range 0-3: 0 = deactivate (open) 1 = activate (close) 2 = undefined 3 = static (do not change the current state)	
	Output State on Alarm		1 – activate
		Range 0-3: 0 = deactivate (open) 1 = activate (close) 2 = undefined 3 = static (do not change the current state)	
4-5		Reserved	
6	Precision	Digits to the right of the decimal point. Affects precision of value displayed and precision of value reported to host server.	Channel Specific
		Range 0-8	
7	Low Warning Limit	Low warning limit.	-1.0
		Floating point value – e.g., 15.2 Range -999999.0 to 999999.0 -1.0 disables limit	
8	Low Alarm Limit	Low alarm limit (should be less than low warning limit).	-1.0
		Floating point value – e.g., 12.8 Range -999999.0 to 999999.0 -1.0 disables limit	
9	High Warning Limit	High warning limit.	-1.0
		Floating point value – e.g., 26.4 Range -999999.0 to 999999.0 -1.0 disables limit	
10	High Alarm Limit	High alarm limit (should be greater than high warning limit).	-1.0
		Floating point value – e.g., 28.1 Range -999999.0 to 999999.0 -1.0 disables limit	

Parameters for Digital Channel Configuration (channel numbers 1-50 are predefined digital channels)			
Parameter Code	**Reference**	**Description**	**Default**
1	Name	A representative name by which to reference the channel. ASCII Text, 30 characters max	Channel Specific
2	Mode	Defines operating mode of channel. 0 = disabled 1 = Status Only (value is monitored, no testing of value against limits) 2 = Report on Alarm (value is monitored and tested against limits)	Status Only [1]
3	Alarm Delay	The continuous time the value must exceed a limit before it is considered to be in violation of that limit. Range 0-65535 seconds 0 = no delay time, immediate alarm	10
	Source Data Register	This defines the source register of the value for this channel. See Appendix B – Data Registers.	10
	Delta Debounce		10
	Alarm Output Data Register	An output data register that can be set when this channel goes into alarm, referenced as a data register. See Appendix B – Data Registers.	Disabled [0]
	Output State on Normal	Range 0-3: 0 = deactivate (open) 1 = activate (close) 2 = undefined 3 = static (do not change the current state)	0 – deactivate
	Output State on Alarm	Range 0-3: 0 = deactivate (open) 1 = activate (close) 2 = undefined 3 = static (do not change the current state)	1 - activate
6	Normal (Idle) State	State of input when condition being monitored is normal.	Normally Open [0]

Parameters for Digital Channel Configuration (channel numbers 1-50 are predefined digital channels)			
Parameter Code	**Reference**	**Description**	**Default**
		0 – open or > 3.0 V 1 – closed to ground	
7	Modbus slave bit packed position (bitpos)	Read Only	
8	Duration Limit	A limit on the accumulated time that this input is not normal. Range -1 to 9999999 seconds -1 disables limit	-1
9	Starts Limit	A limit on the number of times the input transitioned to not normal. Range -1 to 9999999 counts -1 disables limit	-1

9.12 Report Flag Configuration – Type 12

There are several report types that can be generated by the Messenger, each with a unique trigger mechanism. Report flags are used to enable specific channel data to be included in specific report types.

Parameters for Report Flag Configuration			
Parameter Code	**Report Type**	**Description**	**Trigger**
1	Standard (PER)	Include all channels that have a PER report flag set.	Standard Report Interval (time based and on-demand)
2	Demand (DEM)	Include all channels with this flag in response to a poll request.	On-demand poll request from server.
3	End of Day (EOD)	Include all channels that have an EOD report flag set.	Midnight (UTC Time) or on-demand
4	Trip (TRIP)	Defined as engine on to engine off. Include all channels that have a TRIP report flag set.	Engine off
5	SMS911 (SMS)	Include all channels that have the SMS report flag set. This report is only sent via SMS and is intended for critical alarm notification. The size of an SMS message is limited so choose channels accordingly.	Any channel with SMS flag set and transitions to alarm
6	SREC	Enables a channel to report its value to the server based on delta or alarm event.	

Defining which channels to be included in which report is step 1. Step 2 is to decide what type of data from that channel to include. Each channel maintains a basic set of data based on the channel type, either analog or digital (see the Channel Data section).

Channel Type	Report Type	Data Types Reported (i.e., Report Flag Setting)
Analog	Standard (PER)	0 = none 1 = current value 2 = current value + current max/mix 3 = undefined
	End of Day (EOD)	0 = none 1 = current value 2 = current value + daily max/mix 3 = undefined
	Trip (TRIP)	0 = none 1 = current value 2 = current value + trip max/mix 3 = undefined

Channel Type	Report Type	Data Types Reported (i.e., Report Flag Setting)
Digital	Standard (PER)	0 = none 1 = current value 2 = current value + counts + duration 3 = undefined
	End of Day (EOD)	0 = none 1 = current value + daily counts + duration 2 = current value + daily counts + duration 3 = undefined
	Trip (TRIP)	0 = none 1 = current value + counts + duration 2 = current value + counts + duration 3 = undefined

9.13 Date/Time Read/Write – Type 16

This method of setting the RTC in the system is always available but should be used with caution. When GPS or cellular is available, setting time this way can generate unwanted side effects. There is not a real Date/Time configuration. This provides an alternate method for setting date/time OTA.

Parameters for Date/Time Configuration		
Parameter Code	**Reference**	**Description**
1	Time	Enter as hours, minutes and seconds. Format = hhmmss Use 2 digits for each
2	Date	Enter as month, day and year. Format = mmddyy Use 2 digits for each
3	Time Zone	Local time zone. Range 0-7: 0 = UTC 1 = Atlantic 2 = Eastern 3 = Central 4 = Mountain 5 = Pacific 6 = Alaska 7 = Hawaii
4	Daylight Saving	To correct local time if daylight saving is observed. Range 0-1: 0 = daylight saving not active 1 = active

9.14 MODBUS Configuration – Type 18

Parameters for MODBUS Configuration			
Parameter Code	**Reference**	**Description**	**Default**
1	Name	A name that is representative of this data register type. ASCII Text, 30 characters max	Channel Specific
2	Type	Enable. 0 = None 1 = Master 2 = Slave	0
3	Slave ID	Modbus ID of slave device. Range -1 to 255: -1,0 = disabled 1-227 = for direct connect slave devices 228-239 = reserved 240-255 = for peer to peer devices	-1
4	Modbus Function Code	Defines the type of data register to read/write in the slave. 0 – None 1 – Read Coil (1-bit) 2 – Read Status (1-bit) 3 – Read Holding (16-bit) 4 – Read Input (16-bit) 5 – Write Coil (1-bit) 6 – Write Holding (16-bit) 15 – Write Multiple Coil (1-bit) 16 – Write Multiple Holding (16-bit)	None [0]
5	Register Number	Register number in slave to read/write. Range 1-65535	1
6	Register Type	Defines data type stored in register. Range 0-7: 0 = 16-bit register (native MODBUS register) 1 = 32-bit register 2 = 1-bit from 16-bit register 3 = 1-bit from 32-bit register 4 = bit-packed 16-bit register 5 = bit-packed 32-bit register 6 = float value from 32-bit register 7 = double precision 32-bit register	0

Parameters for MODBUS Configuration			
Parameter Code	**Reference**	**Description**	**Default**
7	Weight	Used to scale register value when not in engineering units. Scaled = (weight * register value) + offset Floating point value – e.g., 0.25 Range -999999.0 to 999999.0	1.0
8	Offset	Used to scale register value when not in engineering units. Scaled = (weight * register value) + offset Floating point value – e.g., -25.0 Range -999999.0 to 999999.0	0.0
9	Signed	Indicates that the register contains a signed value. 1 = register signed 0 = register not signed	Not Signed [0]
10	Display Precision	Number of significant digits to print. Range 0-8	1
11	Endian	When reading double registers, this defines the byte ordering in the register pair. Example: Double register value (hex) = 0x12345678 If order is Big Endian: Register x = 1234 Register x+1 = 5678 If order is Little Endian: Register x = 5678 Register x+1 = 1234 0 = Little Endian 1 = Big Endian	Little Endian [0]
13	Aggregate Mask	When reading bit packed registers (register types 4-5), use this value to mask unwanted bits. A 0 in a bit position clears that bit in the value read. For the remaining bits, when a change from 0 to 1 is detected, an alarm event is generated. If a change from 1 to 0 is detected, a return to normal event is generated. This makes it possible for an alarm and normal event to be generated for the same channel at the same time. Hexadecimal value – e.g., ffff1afc Range 0 – ffffffff	ffffffff
12	Bit Number	When reading bit packed registers (register types 2-3), use this value to read the value of a specific bit in a 16-bit or 32-bit register.	1

Parameters for MODBUS Configuration			
Parameter Code	Reference	Description	Default
		Numeric Value Range 1-32	

9.15 Analog Input Configuration – Type 11

Parameters for Analog Input Configuration			
Parameter Code	**Reference**	**Description**	**Default**
1	Name	A representative name by which to reference the channel. ASCII Text, 30 characters max	C
2	Input Type	Analog input type. 0 = none 1 = 0-20 mA DC 2 = 4-20 mA DC 3 = 0-10 V DC 4 = 0-20 mA DC – custom 5 = 4-20 mA DC – custom 6 = 0-10 V DC – custom	4-20 mA (2)
3	k-factor	Damping factor. Range 0.0-1.0	0.75
4	Offset – custom scaling	Custom scaling offset when the input type is custom (4, 5 or 6). Range = -99,999,999 to 99,999,999	0.0
5	Bit Weight – custom scaling	Custom scaling bit weight when the input type is custom (4, 5 or 6). Range = -99,999,999 to 99,999,999	1.0

9.16 Digital Input Configuration – Type 17

Parameters for Digital Input Configuration			
Parameter Code	**Reference**	**Description**	**Default**
1	Name	A representative name by which to reference the channel. ASCII Text, 30 characters max	C
2	Type	Input type. 0 = none 1 = digital input 2 = pulse input	Channel Specific
20	Debounce	Debounce of both rising and falling edges, applies to digital input type only. Range 1-255	8
22	Pull-Up Enable	Pull-up the input. 0 – deactivate pull-up 1 – activate pull-up	1

9.17 Digital Output Configuration – Type 13

Parameters for Digital Output Configuration			
Parameter Code	**Reference**	**Description**	**Default**
1	Name	A representative name by which to reference the channel. ASCII Text, 30 characters max	C
2	Active State	Define what state is considered to be the active state. Used to track number of activations and duration activated. 0 = open 1 = close 2-3 = do nothing	Channel Specific
3	Source	Define the source of the value that should drive this output. Range – valid data register	8
4	Pulse Duration	Defines the duration that the output will stay in the activated state. 0 – deactivate pull-up 1 – activate pull-up	1
5	Output State When Source Value is 1	Defines the state of the output when the source data register value = 1. 0 = open 1 = close 2-3 = do nothing	1
6	Output State When Source Value is 0	Defines the state of the output when the source data register value = 0. 0 = open 1 = close 2-3 = do nothing	1

9.18 EVAL Expression Configuration – Type 10

An expression can be used to calculate a value from inputs/outputs in the system. Some examples would be to scale a value, do units conversion on a value, compute a logical value for activating an output, detecting an alarm, and so on. Expressions are user entered and can contain up to four operands, A, B, C and D.

Parameters for Expression Configuration			
Parameter Code	**Reference**	**Description**	**Default**
1	Name	A representative name by which to reference the expression. ASCII Text, 30 characters max	C
2	Enable	Defines whether or not this expression will be evaluated. 0 = disabled 1 = enabled	0
3	Evaluation Order	There are two levels of expression evaluation. Level 2 is only necessary if an intermediate value must first be calculated. 1 = evaluate first 2 = evaluate second	8
4	Evaluation Type	Defines the expected data type of the result. 0 – none 1 – logic (digital) 2 – numeric (no decimal) 3 – float (arithmetic)	1
5	Expression	User entered expression. Examples: a+b a+b-c a*b a*b/c a && b a || b a > b	1
Operand A			
10	Type	Operand A type. 0 = none 1 = variable 2 = constant	1

Parameters for Expression Configuration			
Parameter Code	**Reference**	**Description**	**Default**
11	Constant	If operand A is of type constant, this is the value of that constant. Floating point number	1.0
12	Variable Data Register	If operand A is of type variable, this is the data register where the value to use is stored. Data Register	1.0
13	Variable Data Type	If operand A is of type variable, this defines the data value to use from that data register, i.e., raw value, scaled engineering value, etc. Data Register	1.0
Operand B			
20	Type	Operand B type. 0 = none 1 = variable 2= constant	1
21	Constant	If operand B is of type constant, this is the value of that constant. Floating point number	1.0
22	Variable Data Register	If operand B is of type variable, this is the data register where the value to use is stored. Data Register	1.0
23	Variable Data Type	If operand B is of type variable, this defines the data value to use from that data register, i.e., raw value, scaled engineering value, etc. Data Register	1.0
Operand C			
30	Type	Operand C type. 0 = none 1 = variable 2= constant	1
31	Constant	If operand C is of type constant, this is the value of that constant. Floating point number	1.0
32	Variable Data Register	If operand C is of type variable, this is the data register where the value to use is stored. Data Register	1.0

Parameters for Expression Configuration			
Parameter Code	**Reference**	**Description**	**Default**
33	Variable Data Type	If operand C is of type variable, this defines the data value to use from that data register, i.e., raw value, scaled engineering value, etc. Data Register	1.0
Operand D			
40	Type	Operand D type. 0 = none 1 = variable 2= constant	1
41	Constant	If operand D is of type constant, this is the value of that constant. Floating point number	1.0
42	Variable Data Register	If operand D is of type variable, this is the data register where the value to use is stored. Data Register	1.0
43	Variable Data Type	If operand D is of type variable, this defines the data value to use from that data register, i.e., raw value, scaled engineering value, etc. Data Register	1.0

9.19 J1939 PGN Configuration – Type 15

There are several common PGNs that are predefined in the system. The user can also define a different or proprietary PGN for their own application. The maximum number of PGNs supported is 50.

Parameters for PGN Configuration			
Parameter Code	**Reference**	**Description**	**Default**
1	Name	A representative name by which to reference the PGN. ASCII Text, 30 characters max	C
2	Enable	Is this PGN enabled for reading from the J1939 CAN bus. 0 = no 1 = yes	
3	Number	Number defined by the SAE.	
4	SPN List	A listing of SPNs that should be extracted from this PGN. The maximum number of SPNs is 16. Range – valid SPN data register	8

9.20 J1939 SPN Configuration – Type 14

Many values are encoded within a PGN message received on the CAN bus. These values are referred to as SPNs. When a PGN message is received, it is decoded by the configuration shown below. The decoded value is stored in the corresponding SPN data register. There are several common SPNs that are predefined in the system. The user can also define a different or proprietary SPN for their own application. The maximum number of SPNs supported is 150.

Parameters for SPN Configuration			
Parameter Code	**Reference**	**Description**	**Default**
1	Name	A representative name by which to reference the SPN. ASCII Text, 30 characters max	C
2	Enable	Is this SPN enabled for decoding from a received PGN. 0 = no 1 = yes	
3	Number	Unique number defined by the SAE.	
4	Type	The value decoded from the PGN message will be of this type. 0 = none 1 = digital (2-bits, no scaling) 2 = numeric (a numeric value only, no scaling) 3 = analog (requires scaling) 4 = text (treat as string value) 5 = other	8
5	Start Bit	Defines the start bit of the SPN value in the 64-bit J1939 payload. Range: 0-63	8
6	Number of Bits	Defines the number of bits in the SPN value, starting with the start bit. Range: 0-64	8
7	Multiplier	The default multiplier will be per the J1939 SAE docs but it can be changed by the user. Float	8
8	Multiplier	The default multiplier will be per the J1939 SAE docs but it can be changed by the user. Float	8
9	k-factor	Damping factor Range: 0.0-1.0	1.0

Parameters for SPN Configuration			
Parameter Code	**Reference**	**Description**	**Default**
10	Units	A text string representing the engineering units of the value. ASCII Text, 11 characters max	

9.21 PEER Poll Configuration – Type 28

The Messenger can be configured to work in a peer to peer mode with another Messenger. This mode of operation allows a peer to share data directly with another peer. For this to work, all radios in the peer to peer network must be CDMA modems with static IPs. Data is exchanged by a client peer (local) polling a server peer (remote). The protocol used between peers is Modbus RTU. The source of the data (in the remote peer) can be any valid channel, while the destination (in the local peer) is a Modbus channel.

Analog values are read as a floating point and digital values are read as bits.

To configure a Modbus channel in the local peer, set the following configuration parameters in a Modbus channel:

1. Set the slave ID to match one of the predefined peer IDs, 240 to 255. This ID corresponds to one of the 16 possible peer configurations, i.e., 240 references Peer 1, 241 references Peer 2, etc.
2. If reading an analog value, set the Function Code to READ FLOAT. If reading a digital value, set the Function Code to READ COIL.
3. Set the Register Number to the channel number in the remote peer.

Parameters for Peer Poll Configuration			
Parameter Code	**Reference**	**Description**	**Default**
1	Name	A name used to reference the server (remote) peer. ASCII Text, 15 characters max	“Peer”
2		Reserved.	
3	Poll Interval	Interval the local peer polls the remote peer. Range 0-1440 minutes 0 = disables polling	0
4	Peer Port Number	Port that the remote peer is listening on for incoming requests. Range 0-65535	502
5	Peer IP	Static IP of the remote peer. 15 characters max – xxx.xxx.xxx.xxx (entered in dotted decimal format only)	Null

9.22 PEER Push Configuration – Type 29

This is part of the peer mechanism used to share data between devices in a peer to peer network. This method pushes a data value to a remote peer based on a change in the value. This is a more efficient method than the polling as described in the PEER Poll Configuration – Type 28 section. Data is exchanged by a client (local) peer pushing (writing) data to a server (remote) peer. The protocol used between peers is Modbus RTU. The source of the data (in the local peer) can be any valid channel, while the destination (in the remote peer) is a Modbus channel.

Analog values are written as floating point and digital values are written as bits.

To configure a Modbus channel in a remote peer to accept a pushed value, set the following configuration parameters in a remote peer Modbus channel:

1. Set the slave ID to match one of the predefined peer IDs, 240 to 255. This reserves this channel to receive a pushed value.
2. If receiving an analog value, set the Function Code to READ FLOAT. If receiving a digital value, set the Function Code to READ COIL.

Parameters for Peer Push Configuration			
Parameter Code	**Reference**	**Description**	**Default**
1	Source Channel Number	Defines a channel number in the local peer as the source of the data. Range is a valid channel number in the local peer, 1-999 0 = disables push	0
2	Destination Channel Number	Defines a channel number in the remote peer as the destination of the data. Range is a valid channel number in the remote peer, 1-999 0 = disables push	0
3	Peer ID	Identifies which configuration to use to contact the remote peer (see the PEER Poll Configuration – Type 28 section). Range 1-16 0 = disables push	0
4	Percent Change Trigger	This defines the amount of change required to trigger a push of the value. The change is a percent between the current value and the last value to cause a trigger. Applies to analog channels only. Floating point value Range 0.0-100.0 percent	10.0
5	Debounce	Once a trigger condition has been detected, this defines the continuous time that condition must exist before the value is pushed.	10

Parameters for Peer Push Configuration			
Parameter Code	Reference	Description	Default
		Range 0-3600 seconds	

9.23 Bluetooth Nordic Configuration – Type 52

Parameters for Bluetooth Configuration			
Parameter Code	Reference	Description	Default
1	Device Name	Name that appears in the Bluetooth app when connecting to the device. When the device name is the default, then a pseudo unique string of hex characters will be appended to “M3_”.	“Messenger3”
		ASCII Text, 21 characters max	
2	Password	Password used in Bluetooth pairing.	“268928”
		ASCII Text, Numbers only 6 characters exactly	

10 How-To

This section provides how-to steps to perform some common functions.

10.1 Setting Reporting Rates When Moving and Stationary

Setting	Via OTA or Debug Port
Standard Reporting Rate – when not exceeding a predefined speed over ground, course change or RPM threshold (set to 120 minutes). Exception Reporting Rate – when moving faster than the ground limit, course change or RPM limit (set to 300 seconds).	OTA Messenger Protocol: |258,7,2,120,3,300| Debug Port: 7,2,120,3,300

10.2 Computing Engine Hours from Engine Run

Occasionally the J1939 or J1708 bus does not have the Engine Hours parameter available. The Messenger can be configured to compute the Engine Hours from the RPM parameter. The steps to set this up are as follows:

Setting	Via OTA or Debug Port
Set the Messenger to Compute Engine Hours.	OTA Messenger Protocol: |258,2,4,1| Debug Port: 2,4,1
Preset Engine Hours to the current Engine Hour meter value (for example, 2233.4). This allows the Messenger to provide accurate Engine Hours reporting.	OTA Messenger Protocol: |258,8,4,2233.4| Debug Port: 8,4,2233.4

10.3 Enabling Low Power Mode to Conserve Battery

In low power mode, the Messenger turns off the Cellular and GPS modules, stops monitoring all inputs and puts the processor into a very low power mode. The Messenger processor wakes up every 10 seconds to determine if the engine is running – either from CAN activity, J1708 activity or Digital Input 1, whichever is configured to indicate Engine Run.

The Messenger enters low power mode when the engine is not running for **enterlp** seconds.

The Messenger exits low power mode every **exitlp** minutes to check for incoming SMS or over the air messages.

Setting	Via OTA or Debug Port
Enable Low Power mode.	OTA Messenger Protocol: |258,2,1,1| Debug Port: 2,1,1
Set time delay to enter low power mode to 120 seconds (enterlp).	OTA Messenger Protocol: |258,1,4,120| Debug Port: 1,4,120

Setting	Via OTA or Debug Port
Set time interval to exit low power mode to check for any incoming messages to 60 minutes (exitlp).	OTA Messenger Protocol: |258,1,5,60| Debug Port: 1,5,60

10.4 Setting Hard Acceleration/Deceleration Alarms

The Messenger continually evaluates the Road Speed of the vehicle based on J1939 or J1708 data. Hard Braking and Fast Acceleration alarms are immediately reported when the Road Speed of the vehicle exceeds either of the available limits.

The limits are specified in MPH. If the Road Speed changes by more than the specified MPH in a second, then the condition is in alarm and it is reported with a unique event number, the current location and the time.

Setting	Via OTA or Debug Port
Set Hard Braking alarm limit. For example, set to 7.5 MPH if the Road Speed drops by more than 7.5 MPH in a second.	OTA Messenger Protocol: |258,8,9,7.5| Debug Port: 8,9,7.5
Set Fast Acceleration alarm limit. For example, set to 4.5 MPH if the Road Speed increases by more than 4.5 MPH in a second.	OTA Messenger Protocol: |258,8,10,4.5| Debug Port: 8,10,4.5

10.5 Using a Digital Input to Determine Engine On

Digital Input 1 can be used to determine when an engine is on or off. To accomplish this, the following must be performed.

Setting	Via OTA or Debug Port
Enable Engine Run to be determined from a Digital Input (14,1). Set the Messenger to Compute Engine Hours (4,1). Make sure the 1708 option is disabled (5,0).	OTA Messenger: |258,2,4,1,5,0,14,1| Debug Port: 2,4,1,5,0,14,1
Set Reporting debounce time to 5 seconds. This defines the consecutive amount of time that the engine running input (digital input 1) has to be on or off before it is considered running or off.	OTA Messenger Protocol: |258,7,13,5| Debug Port: 7,13,5
Preset Engine Hours to the current Engine Hour meter value (345.6, for example). This allows the Messenger to provide accurate Engine Hours reporting.	OTA Messenger Protocol: |258,8,4,345.6| Debug Port: 8,4,345.6
Set the state of the input to match the engine running	Example of signal > 3.0 V when engine is running:

Setting	Via OTA or Debug Port
signal. For example, Digital Input 1 is considered 'normal' when the input is floating or > 3.0 V and 'notnormal' when it is grounded. 'Notnormal' would indicate the engine is running. Digital input 1 is channel 4. Set the Norm state = 0 (6,0) if the signal goes to ground when the engine is running. Set the Norm state = 1 (6,1) if the signal floats or goes above 3.0 V when the engine is running.	OTA Messenger Protocol: |258,9,4,6,1| Debug Port: 9,4,6,1

10.6 Using the Analog Input for Fuel Level

Fuel Level is frequently not available via the J1939 or J1708 bus. If the Fuel Level sender provides an analog value that represents the level in the tank in a linear fashion, the Analog Input on the Messenger can be configured to provide the Fuel Level.

Setting	Via OTA or Debug Port
Configure the Analog Input. 1-10 V (6,8). For example, if 0.6 V corresponds to 0 percent and 4.7 V corresponds to 100 percent, need to determine what 0 V and 10 V would correspond to, as follows: Slope = 100.0 / (4.7 - 0.6) Slope = 24.4 0 V = -0.6 * 24.4 0 V = -14.6 10 V = (24.4 * 10.0) - 14.6 10 V = 229.4	OTA Messenger: |258,1,6,8,7,-14.6,8,229.4| Debug Port: 1,6,8,7,-14.6,8,229.4
Set the Analog Input value to be always valid.	OTA Messenger: |258,2,12,1| Debug Port: 2,12,1
Set the Analog Input channel to be Fuel Level.	OTA Messenger: |258,9,62,1,Fuel Level| Debug Port: 9,62,1,Fuel Level

11 Appendix A – Monitored Engine Parameters

Engine Parameter	Chan#	J1939	
		PGN	SPN
AMBER Lamp – Check Eng	11		
RED Lamp – Eng Shutdown	10		
PTO State	16	65265	976
Fan Drive State	17	65213	977
Fuel Level	51	65276	96
RPM	52	61444	190
Engine Hours	53	65253	247
Coolant Temperature	56	65262	110
Battery Voltage or Electrical Potential	57	65271	158 or 168
Oil Pressure	59	65263	100
Fuel Rate	60	65266	183
Vehicle Distance	79	65248	245
Oil Level	90	65263	98
Oil Temperature	91	65262	175
Coolant Level	92	65263	111
Average Fuel Economy	93	65266	185
Instantaneous Fuel Economy	94	65266	184
Throttle Position	95	65266	51
Road Speed	96	65265	84
Barometric Pressure	105	65269	108
Cabin Temperature	106	65269	170
Ambient Temperature	107	65269	171
Accelerator Pedal Position	108	61442	91
Air Filter Differential Pressure	109	65270	107
Engine Load	110	61443	92
Engine Torque	111	61444	513
Engine Fuel Temp	151	65262	174
Estimated Fan Speed	152	65213	975

Engine Parameter	Chan#	J1939	
		PGN	SPN
Diagnostic Message, Single	None	65226	DM1
Diagnostic Message, Multiple	None	60416 and 60160	TPCM and TPDT
Transmission Oil Temp	153	65272	177
Total kW Hours Export	251	65018	2468
Total Reactive Power	252	65028	2456
Overall Power Factor	253	65028	2464
Total Real Power	254	65029	2452
Avg Line-Line AC RMS Voltage	255	65030	2440
Avg Line-Neutral AC RMS Voltage	256	65030	2444
Avg AC Frequency	257	65030	2436
Avg AC RMS Current	258	65030	2448
DPF Passive Regen Status	40	64892	3699
DPF Active Regen Status	41	64892	3700
DPF Active Regen Inhibit Status	42	64892	3702
DPF Active Regen Inhibit Switch	43	64892	3703
DPF Active Regen Inhibit Temp Lockout	44	64892	3714
DPF Active Regen Inhibit Perm Lockout	45	64892	3715
DPF Auto Active Regen Config	46	64892	3718
DPF1 Conditions Not Met For Regen	47	64892	3750
DPF1 Soot Load	260	64891	3719
DPF1 Ash Load	261	64891	3720
DPF1 Elapsed Time Regen	262	64891	3721
AT1 DPF Regen Threshold	263	64891	5466
DPF2 Soot Load	264	64890	3722
DPF2 Ash Load	265	64890	3723
DPF2 Elapsed Time Regen	266	64890	3724
AT2 DPF Regen Threshold	267	64890	5467
DPF Lamp Cmd	268	64892	3697
DPF Status	269	64892	3701

Engine Parameter	Chan#	J1939	
		PGN	SPN
Exhaust High Temp Lamp Cmd	270	64892	3698
Trip Fuel	271	65257	182
Total Fuel	272	65257	250
AT1 DEF Tank Level 1	273	65110	1761
AT1 DEF Tank Level 2	274	65110	3517
AT Catalytic Reduction Active	275	65110	5245
Engine Wait Start Lamp	276	65252	1081
Engine Protection Shutdown	277	65252	1110
Engine Protection Near Shutdown	278	65252	1109
Engine Protection Coolant Level Status	279	65252	5566

12 Appendix B – Data Registers

/**********

* Defined register addresses for all data values in the system.
* These addresses are used to retrieve the respective values for use in computations and for updating values
* in channels.

**********/

/*_____System Level Internal Inputs__*/

These values are derived internally and represent status of the named resource. These are digital type values and value = 0 is OK, value = 1 is FAULT.

Name	Data Register Number	Description
DATA_REG_SYS_CELL	1	Status of cell modem
DATA_REG_SYS_COMM1	2	Status of user port 1
DATA_REG_SYS_COMM2	3	Status of user port 2
DATA_REG_SYS_CAN	4	Status of CAN
DATA_REG_SYS_GPS	5	Status of GPS
DATA_REG_SYS_ACCEL	6	Status of accelerometer
DATA_REG_SYS_BLUETOOTH	7	Status of Bluetooth engine

/*_____Physical Analog Inputs____*/

Name	Data Register Number	Description
DATA_REG_ADC_1	100	
DATA_REG_ADC_2	101	
DATA_REG_ADC_3	102	
DATA_REG_ADC_VIN	103	
DATA_REG_ADC_SCAP	104	
DATA_REG_ADC_TEMP	105	

/*_____Physical Digital Inputs_____*/

Name	Data Register Number	Description
DATA_REG_DIN1	200	
DATA_REG_DIN2	201	
DATA_REG_DIN3	202	
DATA_REG_DIN4	203	

/*_____Physical Digital Outputs____*/

Name	Data Register Number	Description
DATA_REG_DOUT1	300	
DATA_REG_DOUT2	301	
DATA_REG_DOUT3	302	

/*_____ Supported PGNs_____*/

Name	Data Register Number	Description
DATA_REG_PGN_DM1	400	
DATA_REG_PGN_TPCM	401	
DATA_REG_PGN_TPDT	402	
DATA_REG_PGN_TSC1	403	
DATA_REG_PGN_EEC1	404	
DATA_REG_PGN_ET1	405	
DATA_REG_PGN_EFL_P1	406	
DATA_REG_PGN_LFE	407	
DATA_REG_PGN_VEP	408	
DATA_REG_PGN_DD	409	
DATA_REG_PGN_HOURS	410	
DATA_REG_PGN_VD	411	
DATA_REG_PGN_VDHR	412	
DATA_REG_PGN_CCVS	413	
DATA_REG_PGN_ATS1	414	

Name	Data Register Number	Description
DATA_REG_PGN_ATS2	415	
DATA_REG_PGN_DPCFC1	416	
DATA_REG_PGN_LFC	417	
DATA_REG_PGN_AT1T1L	418	
DATA_REG_PGN_SHUTDN	419	
DATA_REG_PGN_AMB	420	
DATA_REG_PGN_EEC2	421	
DATA_REG_PGN_IC	422	
DATA_REG_PGN_TF	423	
DATA_REG_PGN_AUXIO5	424	
DATA_REG_PGN_LCN1	425	
DATA_REG_PGN_LCN2	426	
DATA_REG_PGN_LCN3	427	
DATA_REG_PGN_L_CCS	428	
DATA_REG_PGN_AUXIO	429	
DATA_REG_PGN_CANT	430	
DATA_REG_PGN_CP750	431	
DATA_REG_PGN_MSGR	432	
DATA_REG_PGN_TD	433	
DATA_REG_PGN_REQ	434	
DATA_REG_PGN_BDT	435	
DATA_REG_PGN_DBCMD	436	

/*_____Supported SPNs_____*/

Name	Data Register Number	Description
DATA_REG_SPN_DM1_DTC	600	
DATA_REG_SPN_DM1_RED_STOP_LAMP	601	
DATA_REG_SPN_DM1_AMBER_WARN_LAMP	602	
DATA_REG_SPN_DM1_PROTECT_LAMP	603	
DATA_REG_SPN_DM1_MIL_LAMP	604	
DATA_REG_SPN_TSC1_REQ_SPEED	605	
DATA_REG_SPN_TSC1_REQ_TORQUE	606	

Name	Data Register Number	Description
DATA_REG_SPN_EEC1_PCTTORQUE	607	
DATA_REG_SPN_EEC1_SPEED	608	
DATA_REG_SPN_ET1_COOLANT_TEMP	609	
DATA_REG_SPN_ET1_OIL_TEMP	610	
DATA_REG_SPN_ET1_FUEL_TEMP	611	
DATA_REG_SPN_EFLP1_OIL_PRESSURE	612	
DATA_REG_SPN_EFLP1_OIL_LEVEL	613	
DATA_REG_SPN_EFLP1_COOLANT_LEVEL	614	
DATA_REG_SPN_LFE_FUEL_RATE	615	
DATA_REG_SPN_LFE_INST_FUEL_ECON	616	
DATA_REG_SPN_LFE_AVG_FUEL_ECON	617	
DATA_REG_SPN_LFE_THROTTLE_POS	618	
DATA_REG_SPN_VEP_BATT_UNSWXED	619	
DATA_REG_SPN_VEP_BATT_SWXED	620	
DATA_REG_SPN_DD_FUEL_LEVEL	621	
DATA_REG_SPN_HOURS_ENGINE_TOTAL	622	
DATA_REG_SPN_VD_VEHDIST	623	
DATA_REG_SPN_VDHR_VEHDIST_HR	624	
DATA_REG_SPN_CCVS_VEH_SPEED	625	
DATA_REG_SPN_CCVS_PTO_STATE	626	
DATA_REG_SPN_ATS1_DPF1_SOOT_LOAD	627	
DATA_REG_SPN_ATS1_DPF1_ASH_LOAD	628	
DATA_REG_SPN_ATS1_DPF1_ET_REGEN	629	
DATA_REG_SPN_ATS1_DPF_REGEN_THRESH	630	
DATA_REG_SPN_ATS2_DPF2_SOOT_LOAD	631	
DATA_REG_SPN_ATS2_DPF2_ASH_LOAD	632	
DATA_REG_SPN_ATS2_DPF2_ET_REGEN	633	
DATA_REG_SPN_ATS2_DPF_REGEN_THRESH	634	
DATA_REG_SPN_DPF_LAMP_CMD	635	
DATA_REG_SPN_DPF_PASS_REGEN_STATUS	636	
DATA_REG_SPN_DPF_ACT_REGEN_STATUS	637	
DATA_REG_SPN_DPF_STATUS	638	
DATA_REG_SPN_DPF_REGEN_INH_STATUS	639	
DATA_REG_SPN_DPF_REGEN_INH_SWX	640	

Name	Data Register Number	Description
DATA_REG_SPN_DPF_REGEN_INH_TEMP	641	
DATA_REG_SPN_DPF_REGEN_INH_PERM	642	
DATA_REG_SPN_DPF_AUTO_REGEN_CFG	643	
DATA_REG_SPN_EXH_HIGH_TEMP_LAMP	644	
DATA_REG_SPN_DPF1_COND_NO_REGEN	645	
DATA_REG_SPN_LFC_ENG_TRIP_FUEL	646	
DATA_REG_SPN_LFC_ENG_TOTAL_FUEL	647	
DATA_REG_SPN_AT1_DEF_TANK_LEVEL1	648	
DATA_REG_SPN_AT1_DEF_TANK_LEVEL2	649	
DATA_REG_SPN_AT1_CATALYTIC_RED_ACT	650	
DATA_REG_SPN_ENG_WAIT_START_LAMP	651	
DATA_REG_SPN_ENG_PROT_SHUTDOWN	652	
DATA_REG_SPN_ENG_PROT_NEAR_SHUTDN	653	
DATA_REG_SPN_ENG_PROT_COOL_LVL_ST	654	
DATA_REG_SPN_AMB_BAR_PRESS	655	
DATA_REG_SPN_AMB_CAB_TEMP	656	
DATA_REG_SPN_AMB_AIR_TEMP	657	
DATA_REG_SPN_EEC2_ACCEL_PEDAL_POS	658	
DATA_REG_SPN_EEC2_ENG_LOAD	659	
DATA_REG_SPN_IEC_AIR_FILT_DPRESS	660	
DATA_REG_SPN_IEC_EXHAUST_TEMP	661	
DATA_REG_SPN_TF_TRANS_OIL_TEMP	662	
DATA_REG_SPN_AUXIO5_CH6	663	
DATA_REG_SPN_AUXIO5_CH5	664	
DATA_REG_SPN_AUXIO5_CH4	665	
DATA_REG_SPN_AUXIO5_CH3	666	
DATA_REG_SPN_CP750_CURR_CHAN0	667	
DATA_REG_SPN_CP750_CURR_CHAN1	668	
DATA_REG_SPN_CP750_CURR_CHAN2	669	
DATA_REG_SPN_CP750_CURR_CHAN3	670	
DATA_REG_SPN_CP750_CURR_CHAN4	671	
DATA_REG_SPN_CP750_CURR_CHAN5	672	
DATA_REG_SPN_CP750_CURR_CHAN6	673	
DATA_REG_SPN_CP750_CURR_CHAN7	674	

Name	Data Register Number	Description
DATA_REG_SPN_CP750_PULSE_CNT_CHAN0	675	
DATA_REG_SPN_CP750_PULSE_CNT_CHAN1	676	
DATA_REG_SPN_AUXIO_AS4	677	
DATA_REG_SPN_AUXIO_AS3	678	
DATA_REG_SPN_AUXIO_AS15	679	
DATA_REG_SPN_AUXIO_CH1	680	
DATA_REG_SPN_AUXIO_CH2	681	
DATA_REG_SPN_CP750_MISC	682	
DATA_REG_SPN_CP750_ER_STATE	683	
DATA_REG_SPN_CP750_CAN_ADDR	684	
DATA_REG_SPN_SVC_TMR1	685	
DATA_REG_SPN_SVC_TMR2	686	
DATA_REG_SPN_SVC_TMR3	687	
DATA_REG_SPN_SVC_TMR4	688	
DATA_REG_SPN_SVC_TMR5	689	
DATA_REG_SPN_SVC_TMR6	690	
DATA_REG_SPN_SVC_TMR7	691	
DATA_REG_SPN_SVC_TMR8	692	
DATA_REG_SPN_SVC_TMR9	693	
DATA_REG_SPN_SVC_TMR10	694	
DATA_REG_SPN_SVC_TMR11	695	
DATA_REG_SPN_SVC_TMR12	696	
DATA_REG_SPN_SVC_TMR13	697	
DATA_REG_SPN_SVC_TMR14	698	
DATA_REG_SPN_SVC_TMR15	699	
DATA_REG_SPN_SVC_TMR16	700	

/*_____Geofences_____*/

Name	Data Register Number	Description
DATA_REG_GFC1	900	
DATA_REG_GFC2	901	
DATA_REG_GFC3	902	

Name	Data Register Number	Description
DATA_REG_GFC4	903	
DATA_REG_GFC5	904	
DATA_REG_GFC6	905	
DATA_REG_GFC7	906	
DATA_REG_GFC8	907	
DATA_REG_GFC9	908	
DATA_REG_GFC10	909	

/*_____Computed Values_____*/

Name	Data Register Number	Description
DATA_REG_EVAL1	1000	
DATA_REG_EVAL2	1001	
DATA_REG_EVAL3	1002	
DATA_REG_EVAL4	1003	
DATA_REG_EVAL5	1004	
DATA_REG_EVAL6	1005	
DATA_REG_EVAL7	1006	
DATA_REG_EVAL8	1007	
DATA_REG_EVAL9	1008	
DATA_REG_EVAL10	1009	

/*_____Predefined Digital Channels_____*/

Name	Data Register Number	Description
DATA_REG_CHAN_CELL	2000	
DATA_REG_CHAN_COMM	2001	
DATA_REG_CHAN_CAN	2002	
DATA_REG_CHAN_GPS	2003	
DATA_REG_CHAN_ACCEL	2004	
DATA_REG_CHAN_NORDIC	2005	

Name	Data Register Number	Description
DATA_REG_CHAN_USER_DIN1	2006	
DATA_REG_CHAN_USER_DIN2	2007	
DATA_REG_CHAN_USER_DIN3	2008	
DATA_REG_CHAN_USER_DIN4	2009	
DATA_REG_CHAN_USER_DOUT1	2010	
DATA_REG_CHAN_USER_DOUT2	2011	
DATA_REG_CHAN_USER_DOUT3	2012	
DATA_REG_CHAN_ENG_RUN	2013	
DATA_REG_CHAN_SHUTDOWN	2014	
DATA_REG_CHAN_WARNING	2015	
DATA_REG_CHAN_MIL_LAMP	2016	
DATA_REG_CHAN_PROTECT_LAMP	2017	
DATA_REG_CHAN_AS_EN	2018	
DATA_REG_CHAN_AS1_INPUT	2019	
DATA_REG_CHAN_AS2_INPUT	2020	
DATA_REG_CHAN_DPF_PASS_REGEN_STATUS	2021	
DATA_REG_CHAN_DPF_ACT_REGEN_STATUS	2022	
DATA_REG_CHAN_DPF_ACT_REGEN_INH_STATUS	2023	
DATA_REG_CHAN_DPF_ACT_REGEN_INH_SWX	2024	
DATA_REG_CHAN_DPF_ACT_REGEN_INH_TEMP_LOCKOUT	2025	
DATA_REG_CHAN_DPF_ACT_REGEN_INH_PERM_LOCKOUT	2026	
DATA_REG_CHAN_DPF_AUTO_ACT_REGEN_CFG	2027	
DATA_REG_CHAN_DPF1_COND_NOT_MET_FOR_REGEN	2028	

/*_____Predefined Analog Channels_____*/

Name	Data Register Number	Description
DATA_REG_CHAN_FUEL_LVL	3000	
DATA_REG_CHAN_ENG_RPM	3001	
DATA_REG_CHAN_ENG_HRS	3002	
DATA_REG_CHAN_AUXIO_CH1	3003	
DATA_REG_CHAN_AUXIO_CH2	3004	
DATA_REG_CHAN_COOLANT_TEMP	3005	

Name	Data Register Number	Description
DATA_REG_CHAN_BATTERY	3006	
DATA_REG_CHAN_ELECTRICAL	3007	
DATA_REG_CHAN_OIL_PRESS	3008	
DATA_REG_CHAN_FUEL_RATE	3009	
DATA_REG_CHAN_EC_STATE	3010	
DATA_REG_CHAN_ADC_INPUT1	3011	
DATA_REG_CHAN_ADC_INPUT2	3012	
DATA_REG_CHAN_ADC_INPUT3	3013	
DATA_REG_CHAN_SVC_TMR1	3014	
DATA_REG_CHAN_SVC_TMR2	3015	
DATA_REG_CHAN_SVC_TMR3	3016	
DATA_REG_CHAN_SVC_TMR4	3017	
DATA_REG_CHAN_SVC_TMR5	3018	
DATA_REG_CHAN_SVC_TMR6	3019	
DATA_REG_CHAN_SVC_TMR7	3020	
DATA_REG_CHAN_SVC_TMR8	3021	
DATA_REG_CHAN_SVC_TMR9	3022	
DATA_REG_CHAN_SVC_TMR10	3023	
DATA_REG_CHAN_SVC_TMR11	3024	
DATA_REG_CHAN_SVC_TMR12	3025	
DATA_REG_CHAN_SVC_TMR13	3026	
DATA_REG_CHAN_SVC_TMR14	3027	
DATA_REG_CHAN_SVC_TMR15	3028	
DATA_REG_CHAN_SVC_TMR16	3029	
DATA_REG_CHAN_ODOMETER1	3030	
DATA_REG_CHAN_ODOMETER2	3031	
DATA_REG_CHAN_ENG_STARTS		
DATA_REG_CHAN_OIL_LEVEL	3032	
DATA_REG_CHAN_ENG_OIL_TEMP	3033	
DATA_REG_CHAN_COOLANT_LEVEL	3034	
DATA_REG_CHAN_AVG_FUEL_ECON	3035	
DATA_REG_CHAN_INST_FUEL_ECON	3036	
DATA_REG_CHAN_THROTTLE_POS	3037	
DATA_REG_CHAN_VEH_SPEED	3038	

Name	Data Register Number	Description
DATA_REG_CHAN_BAR_PRESS	3039	
DATA_REG_CHAN_CAB_TEMP	3040	
DATA_REG_CHAN_AMB_TEMP	3041	
DATA_REG_CHAN_ACCEL_PEDAL_POS	3042	
DATA_REG_CHAN_AIR_FILT_DIFF_PRESS	3043	
DATA_REG_CHAN_ENG_LOAD	3044	
DATA_REG_CHAN_ENG_TORQUE	3045	
DATA_REG_CHAN_DAILY_FUEL_USED	3046	
DATA_REG_CHAN_EXHAUST_TEMP	3047	
DATA_REG_CHAN_REQUESTED_RPM	3048	
DATA_REG_CHAN_REQUESTED_TORQUE	3049	
DATA_REG_CHAN_ENG_FUEL_TEMP	3050	
DATA_REG_CHAN_EST_FAN_SPEED	3051	
DATA_REG_CHAN_TRANS_OIL_TEMP	3052	
DATA_REG_CHAN_DPF1_SOOT_LOAD	3053	
DATA_REG_CHAN_DPF1_ASH_LOAD	3054	
DATA_REG_CHAN_DPF1_ET_REGEN	3055	
DATA_REG_CHAN_AT1_DPF_REGEN_THRESH	3056	
DATA_REG_CHAN_DPF2_SOOT_LOAD	3057	
DATA_REG_CHAN_DPF2_ASH_LOAD	3058	
DATA_REG_CHAN_DPF2_ET_REGEN	3059	
DATA_REG_CHAN_AT2_DPF_REGEN_THRESH	3060	
DATA_REG_CHAN_DPF_LAMP_CMD	3061	
DATA_REG_CHAN_DPF_STATUS	3062	
DATA_REG_CHAN_EXH_HIGH_TEMP_LAMP_CMD	3063	
DATA_REG_CHAN_ENG_TRIP_FUEL	3064	
DATA_REG_CHAN_ENG_TOTAL_FUEL	3065	
DATA_REG_CHAN_AT1_DEF_TANK_LEVEL1	3066	
DATA_REG_CHAN_AT1_DEF_TANK_LEVEL2	3067	
DATA_REG_CHAN_AT_CATALYTIC_RED_ACTIVE	3068	
DATA_REG_CHAN_ENG_WAIT_START_LAMP	3069	
DATA_REG_CHAN_ENG_PROT_SHUTDOWN	3070	
DATA_REG_CHAN_ENG_PROT_NEAR_SHUTDOWN	3071	
DATA_REG_CHAN_ENG_PROT_COOL_LVL_STATUS	3072	

/*_____USER Defined Channels_____*/

Name	Data Register Number	Description
DATA_REG_CHAN_USER1	4000	
DATA_REG_CHAN_USER2	4001	
…	…	
DATA_REG_CHAN_USER50	4049	

/*_____MODBUS Registers_____*/

Name	Data Register Number	Description
DATA_REG_MBUS1	5000	
DATA_REG_MBUS2	5001	
…	…	
DATA_REG_MBUS100	5099	

13 Technical Support

For remote and communication control systems support, parts and repair, or technical support, visit us online at: www.cattron.com/contact.

Due to continuous product improvement, the information provided in this document is subject to change without notice.

Cattron Support
For remote and communication control systems support, parts and repair, or technical support, visit us online at:
www.cattron.com/contact

Cattron North America Inc., 655 N River Rd NW, Suite A, Warren, OH 44483

9M02-7000-A101-EN
Version A