# JAPAN RADIO TEST REPORT

## Client Information:

Applicant: Shenzhen Elegoo Technology Co.,Ltd

Applicant add.: 101,No.30,Dahe Industrial Zone,Guancheng Community,Guanhu Street,Longhua District,Shenzhen, China

## Product Information:

Product Name: 3D printer

Model No.: NEPTUNE 4 PLUS

Derivative model No.: NEPTUNE 4 MAX

Brand Name: ELEGOO

## Standards:

Item 19 of Article 2 Paragraph 1
MIC public notice 88:2004, annex 43

## Prepared By:

**Dongguan Yaxu (AiT) Technology Limited**

Add. : No.22, Jinqianling Third Street, Jitigang, Huangjiang, Dongguan, Guangdong, China

Date of Receipt: Apr. 10, 2026 Date of Test: Apr. 10, 2026~May. 08, 2026

Date of Issue: May. 09, 2026 Test Result: Pass

This device has been tested and found to comply with the stated standard(s) above, which is (are) applicable only to the tested sample identified in the report.

Note: This report shall not be reproduced except in full, without the written approval of Dongguan Yaxu (AiT) Technology Limited, this document may be altered or revised by Dongguan Yaxu (AiT) Technology Limited, personal only, and shall be noted in the revision of the document. This test report must not be used by the client to claim product endorsement.

**Reviewed by:** Emiya Lin **Approved by:** Simba Huang

# 1 Contents

**1 CONTENTS** ..... **2**

**2 TEST SUMMARY** ..... **3**

2.1 Measurement Uncertainty ..... 4

**3 TEST FACILITY** ..... **5**

3.1 Deviation from standard ..... 5
3.2 Abnormalities from standard conditions ..... 5

**4 VERSION** ..... **6**

4.1 Test Location ..... 6

**5 GENERAL INFORMATION** ..... **7**

5.1 EUT Peripheral List ..... 8
5.2 Test Peripheral List ..... 8

**6 EQUIPMENT USED DURING TEST** ..... **9**

**7 TEST RESULTS** ..... **10**

7.1 Radio Technical Requirements Specification ..... 10
7.2 E.U.T. Test Conditions ..... 11
7.3 Antenna Requirement ..... 13
7.4 Interference Prevention Function ..... 14
7.5 Carrier Sense Function ..... 15
7.6 Frequency Error ..... 17
7.7 Occupied Bandwidth (99%) ..... 18
7.8 Spread Spectrum Bandwidth (90%) ..... 19
7.9 Antenna Power ..... 20
7.10 Spurious Emissions of Tx ..... 22
7.11 RF Accessibility ..... 24
7.12 Spurious Emissions of Rx ..... 25
7.13 Number of Carriers ..... 27



複製禁止

## 2 Test Summary

| Test | Test Requirement | Limit/Severity | Result |
|---|---|---|---|
| Antenna Requirement | MIC Notice No.88 Appendix No. 43 | Notice 88 Appendix 43,B-1 (1)&(2) | PASS |
| Test frequency | MIC Notice No.88 Appendix No. 43 | Notice 88 Appendix 43, A-3 | PASS |
| Frequency Error | MIC Notice No.88 Appendix No. 43 | ±50 PPM or less | PASS |
| Occupied Bandwidth | MIC Notice No.88 Appendix No. 43 | OFDM(802.11n(HT40)) : 26-40MHz<br>Others OFDM : 26MHz or less<br>DSSS : 26MHz or less | PASS |
| Spread-spectrum Bandwidth | MIC Notice No.88 Appendix No. 43 | 500 kHz or more | PASS |
| Antenna Power | MIC Notice No.88 Appendix No. 43 | 10mW/MHz for 802.11b/g/n(HT20);<br>5mW/MHz for 802.11n(HT40)<br>Error＋20% | PASS |
| Spurious Emission of Tx | MIC Notice No.88 Appendix No. 43 | (1) Below 2387 MHz : -26dBm<br>(2) 2387 to 2400 MHz : -16dBm<br>(3) 2483.5 through 2496.5 MHz : -16dBm<br>(4) Over 2496.5 MHz : -26dBm | PASS |
| Interference prevention capability | MIC Notice No.88 Appendix No. 43 | Notice 88 Appendix 43, 44, 45 | PASS |
| RF accessibility | MIC Notice No.88 Appendix No. 43 | Notice 88 Appendix 43, 44, 45 | PASS |
| Spurious Emission of Rx | MIC Notice No.88 Appendix No. 43 | (1) Below 1 GHz: -54dBm<br>(2) 1GHz or higher: -47dBm | PASS |
| Number of Carriers | MIC Notice No.88 Appendix No. 43 | more than 1 sub-carrier in 1MHz | PASS |

**Remark:**

EUT: In this whole report EUT means Equipment Under Test.
Tx: In this whole report Tx (or tx) means Transmitter.
Rx: In this whole report Rx (or rx) means Receiver.
RF: In this whole report RF means Radio Frequency.
Item 19 of Article 2 Paragraph 1

## 2.1 Measurement Uncertainty

The report uncertainty of measurement **y ± U**, where expended uncertainty **U** is based on a standard uncertainty Multiplied by a coverage factor of **k=2**, providing a level of confidence of approximately 95%.

| No. | Item | Uncertainty |
|---|---|---|
| 1 | Frequency Error / 99% & 90% Bandwidth | ± 0.85 x $10^{-7}$ |
| 2 | Antenna Power | ± 0.70 dB |
| 3 | Spurious Emissions | ± 0.80 dB |
| 4 | DC / AC Power Source | ±1.4% |

# 3 Test Facility

**The test facility is recognized, certified or accredited by the following organizations:**

**CNAS- Registration No: L6177**

Dongguan Yaxu (AiT) technology Limited is accredited to ISO/IEC 17025:2017 general Requirements for the competence of testing and calibration laboratories (CNAS-CL01 Accreditation Criteria for the competence of testing and calibration laboratories) on April 18, 2022

**FCC-Registration No.: 362653 Designation Number: CN1457**

Dongguan Yaxu (AiT) technology Limited has been registered and fully described in a report filed with the (FCC) Federal Communications Commission. The acceptance letter from the FCC is maintained in our files.

**IC-Registration No.: 6819A CAB identifier: CN0122**

The 3m Semi-anechoic chamber of Dongguan Yaxu (AiT) technology Limited has been registered by Certification and Engineering Bureau of Industry Canada for radio equipment testing with Registration No.: 6819A

**A2LA-Lab Cert. No.: 6317.01**

Dongguan Yaxu (AiT) technology Limited has been accredited by A2LA for technical competence in the field of electrical testing, and proved to be in compliance with ISO/IEC 17025: 2017 General Requirements for the Competence of Testing and Calibration Laboratories and any additional program requirements in the identified field of testing.

## 3.1 Deviation from standard

None

## 3.2 Abnormalities from standard conditions

None

# 4 Version

**REPORT REVISE RECORD**

| Report Version | Revise Time | Issued Date | Valid Version | Notes |
|---|---|---|---|---|
| V1.0 | / | May. 09, 2026 | Valid | Initial release |

## 4.1 Test Location

All tests were performed at:

Dongguan Yaxu (AiT) Technology Limited
No.22, Jinqianling Third Street, Jitigang, Huangjiang, Dongguan, Guangdong, China.

Tel.: +86.769.82020499 Fax.: +86.769.82020495

# 5 General Information

| | |
|---|---|
| Manufacturer: | Shenzhen Elegoo Technology Co.,Ltd |
| Manufacturer Address: | 101,No.30,Dahe Industrial Zone,Guancheng Community,Guanhu Street,Longhua District,Shenzhen, China |
| EUT Name: | 3D printer |
| Model No: | NEPTUNE 4 PLUS |
| Serial Model: | NEPTUNE 4 MAX |
| Brand Name: | ELEGOO |
| Operating Frequency | 2412 MHz to 2472 MHz |
| Type of Modulation: | 802.11b: DSSS(CCK/QPSK/BPSK)<br>802.11g/n: OFDM(BPSK/QPSK/16QAM/64QAM) |
| Transmit Data Rate: | 802.11b:1/2/5.5/11 Mbps<br>802.11g:6/9/12/18/24/36/48/54 Mbps<br>802.11n(HT20):7.2/14.4/21.7/28.9/43.3/57.8/65/72.2 Mbps |
| Number of Channels | 13 Channels for 802.11b/g/n(HT20) |
| Channel Separation: | 5 MHz |
| Antenna Type | ROD Antenna |
| Antenna gain: | -0.35dBi |
| Normal antenna power: | 802.11b: 3.0 mW/MHz<br>802.11g: 1.5mW/MHz<br>802.11n(HT20):1.5mW/MHz |
| Power Supply Range: | AC 100-120V/220-240V |
| Normal Test Voltage: | The same as above |
| Hard Ware Version: | N/A |
| Soft Ware Version: | N/A |
| Model difference: | PCB board, structure and internal of these model(s) are the same, So no additional models were tested. |

## 5.1 EUT Peripheral List

| No. | Equipment | Manufacturer | Model No. | Serial No. | Power cord | Signal cord |
|---|---|---|---|---|---|---|
| 1 | N/A | N/A | N/A | N/A | N/A | N/A |

## 5.2 Test Peripheral List

| No. | Equipment | Manufacturer | Model No. | Serial No. | Power cord | Signal cord |
|---|---|---|---|---|---|---|
| 1 | N/A | N/A | N/A | N/A | N/A | N/A |

複製禁止

# 6 Equipment Used during Test

| No | Test Equipment | Manufacturer | Model No | Serial No | Cal. Date | Cal. Due Date | Cal. Institution |
|---|---|---|---|---|---|---|---|
| 1 | SIGNAL Analyzer | R&S | FSV40 | 101470 | 2025.09.26 | 2026.09.25 | LISAI |
| 2 | EMI Measuring Receiver | R&S | ESPI | 100773 | 2025.09.25 | 2026.09.24 | LISAI |
| 3 | Mobile phone | Samsung | GALAXY S4 | R33D20 SQYNW | N/A | N/A | LISAI |
| 4 | DC Power supply | Manson | HCS-3604 | G521100 129 | 2025.09.25 | 2026.09.24 | LISAI |
| 5 | Digital Phosphor Oscilloscope | Tektronix | TDS3012 | B021220 | 2025.09.25 | 2026.09.24 | LISAI |
| 6 | Signal Generator | Agilent | N5182A | MY50143 009 | 2025.09.26 | 2026.09.25 | LISAI |
| Note:Calibration by the calibration agencies listed in the table correspond to paragraph 4 (ii) (c) of Article 24-2 in the Radio Law. | | | | | | | |

☐ (a) Calibration conducted by the National Institute of Information and Communications Technology (NICT) or a designated calibration agency under Article 102-18-1 of the Radio Act.

☐ (b) Calibration conducted based on the regulations of Article 135 or 144 of the Measurement Act.

☒ (c) Calibration conducted in foreign countries, which is equivalent to calibration conducted by the NICT or a designated calibration agency under Article 102-18-1 of the Radio Act.

☐ (d) Calibration, etc. conducted by using measuring instruments and other facilities listed at the bottom of appended table 3 of the Radio Act, which is to have been calibrated as described in (a) through (c) above.

# 7 Test Results

## 7.1 Radio Technical Requirements Specification

**Tabel 1: Radio Technical Requirements Specification for 2.4 GHz band wide-band low-power data communication system (Item 19 of Article 2-1)**

| Items | Technical standard |
|---|---|
| Assigned frequency or designated frequency | 2,400-2,483.5MHz |
| Communication method | One-way communication, simplex, semi-duplex, or duplex operation of digital signal transmission including spread spectrum |
| Tolerance of frequency ($\times 10^{-6}$) | ±50 ppm |
| Tolerance of occupied bandwidth | FH : 83.5MHz or less<br>FH + DS : 83.5MHz or less<br>FH + OFDM : 83.5MHz or less<br>OFDM (802.11n(HT40)): 26-40MHz<br>OFDM (802.11g/n(HT20)) : 26MHz or less<br>DSSS(802.11b) : 26MHz or less |
| Antenna power | Designated value<br>(1) FH, FH+DS , FH+OFDM: 3mW/MHz<br>(used in the range of 2427 - 2470.75 MHz)<br>(2) OFDM , DS other than (1) 10mW/MHz<br>(3) Other than (1) & (2) 10mW<br>(4) OFDM OBW 26 - 40MHz: 5mW/MHz<br>Tolerance:+20% |
| Antenna gain | 1) 12.14 dBi or less in principle<br>2) In case of directional antenna<br>(1) FH, FH+DS or FH+OFDM using 2427-2470.75 MHz<br>EIRP≤ 16.91 dBm/MHz<br>(2) OFDM or DS other than (1) EIRP≤ 22.14 dBm/MHz<br>(3) Other than (1) and (2): 22.14 dBm or less<br>(4) OFDM OBW 26 - 40MHz: 19.14dBm/MHz<br>(5) Half-power angle of directional antenna (e) in case of the item 2):e ≤ 360/A (The A is 10 in maximum.) |
| Tolerance of spurious emission intensity | (1) Below 2387 MHz : 2.5μW<br>(2) 2387 to 2400 MHz : 25μW<br>(3) 2483.5 through 2496.5 MHz : 25μW<br>(4) Over 2496.5 MHz : 2.5μW |
| Spreading bandwidth | DS,FH,FH+DS,FH+OFDM : 500kHz or more |
| Spreading rate of spectrum | For DS system;(Spreading bandwidth) / (Frequency corresponding to transmission rate) ≥ 5 |
| Limit of secondary radiated emissions | (1) Below 1 GHz : 4 nW<br>(2) 1 GHz or higher : 20 nW |
| Interference prevention function | Shall have the function of automatic transmission and reception of identification sign. |
| Structure | Shall be of the structure that the RF and modulator sections excluding antenna cannot easily be opened. |
| Number of Carriers | The number of carriers:1 or more/MHz |
| Note | DS: Direct spread<br>FH: Frequency hopping<br>OFDM: Orthogonal frequency division multiplexing |

## 7.2 E.U.T. Test Conditions

<table>
<tr><td>Power supply:</td><td>The EUT has the input voltage to the circuit of RF unit complies with output voltage limitation (±1%) against input voltage fluctuation (±10%).<br>So, all measurements were conducted at only rated voltage AC100V.</td></tr>
<tr><td></td><td> 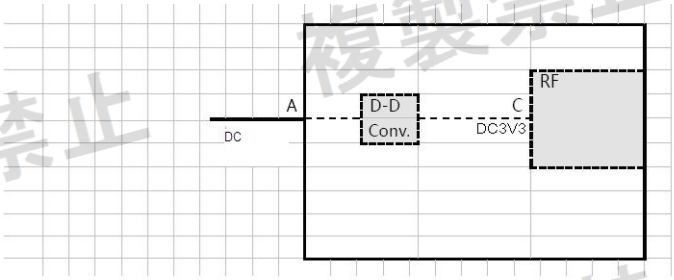

Test below:<br>1: The fluctuation of C point is under ±1%, when input voltage from A point to the test equipment is fluctuated by ±10%.</td></tr>
<tr><td></td><td>The mesurement result of the voltage fluctation at RF circuit when AC100V +/- 10%
<table>
<tr><th>AC INPUT</th><th>DC3V3</th></tr>
<tr><td>100V</td><td>3.33V</td></tr>
<tr><td>90V</td><td>3.33V</td></tr>
<tr><td>110V</td><td>3.33V</td></tr>
</table>
Pre-test the EUT in all voltage mode at the DC 90V, DC 100V and DC110V and conducted to determine the worst-case mode, only the worst-case results (DC 100V) are recorded in this report.</td></tr>
<tr><td>Temperature:</td><td>25.0 °C</td></tr>
<tr><td>Humidity:</td><td>75 % RH</td></tr>
<tr><td>Atmospheric Pressure:</td><td>1010 mbar</td></tr>
<tr><td>Test frequencies:</td><td>If the EUT can be set to 3 of more different (carrier) frequencies in 1 allocated band, testing shall be performed using the Lowest, Middle and the Highest frequency (L, M and H). If there are 2 or fewer frequencies, testing shall be performed with the available frequencies.</td></tr>
<tr><td>Parameters of test software setting</td><td>During testing channel & power controlling software provided by the manufacturer was used to control the operating channel as well as the output power level.
<table>
<tr><td>Test software Version</td><td colspan="3">Test program: CMD</td></tr>
<tr><td>Channels</td><td>Low</td><td>Middle</td><td>High</td></tr>
<tr><td>802.11b Parameters</td><td>Default</td><td>Default</td><td>Default</td></tr>
<tr><td>802.11g Parameters</td><td>Default</td><td>Default</td><td>Default</td></tr>
<tr><td>802.11n(20) Parameters</td><td>Default</td><td>Default</td><td>Default</td></tr>
</table></td></tr>
</table>

EUT channels and frequencies list:

| Channel | Frequency (MHz) | Channel | Frequency (MHz) |
|---|---|---|---|
| 1 | 2412 | 8 | 2447 |
| 2 | 2417 | 9 | 2452 |
| 3 | 2422 | 10 | 2457 |
| 4 | 2427 | 11 | 2462 |
| 5 | 2432 | 12 | 2467 |
| 6 | 2437 | 13 | 2472 |
| 7 | 2442 | / | / |

Remark:

1. Test frequencies are lowest channel: 2412 MHz, middle channel: 2442 MHz and highest channel: 2472 MHz for 802.11b/g/n(HT20)

## 7.3 Antenna Requirement

**Standard requirement**

Applicable for equipment with an antenna terminal, including testing terminals) If an antenna connector is available, all relevant tests will be carried out conducted. If not, tests will be carried out in an anechoic room or with a suitable test-fixture.

**EUT Antenna**

The antenna is integrated on the main FPC and no consideration of replacement. The best case gain of the antenna is -0.35dBi.

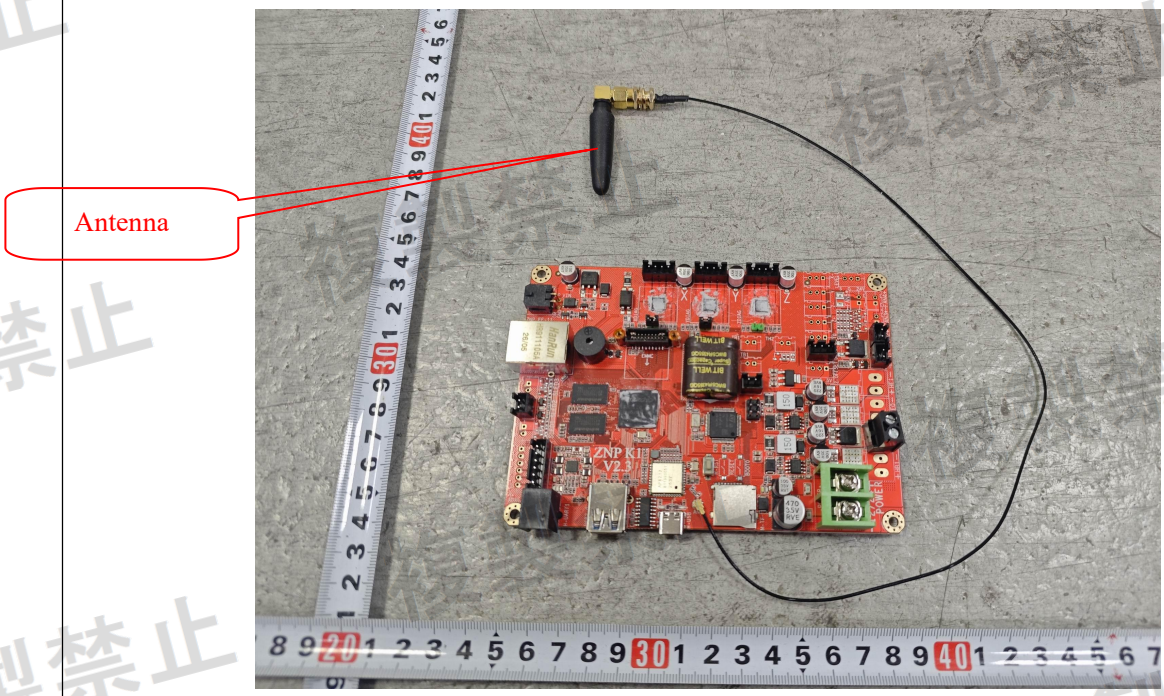


**Result:** All relevant tests will be carried out conducted.

## 7.4 Interference Prevention Function

The device consists of the FPCB antenna and 2.4 GHz WIFI IC; Component IC CPU also can use the protocol function to protect interference come from outside.

We can use the EUT connect a Mobile phone as AP to detect WiFi ID information, Test configuration:

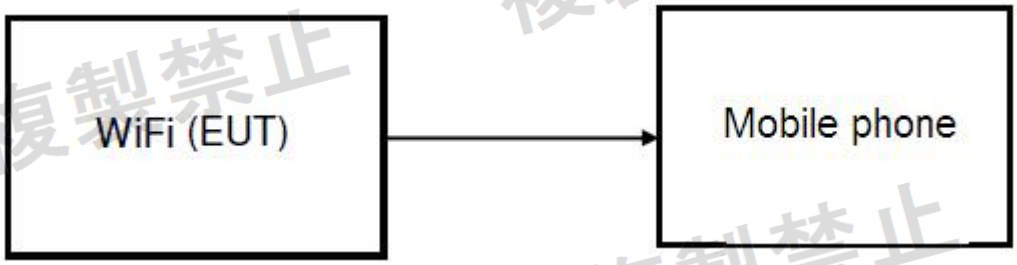


Test Procedure:

The measuring method is according to MIC Notice No.88 Appendix No.43. Run the WiFi and keep WiFi connecting at Mobile phone. The MIC address will be found in the incoming settings.

Test Results:

**Device MAC**

**TV:L9:9J:SA:W7:M3**

**Test result: The unit does meet the requirements.**

## 7.5 Carrier Sense Function

| | |
|---|---|
| Test Requirement: | MIC Notice No.88 Appendix No. 43 |
| | Good or Not Good |
| Test Status: | Set the test equipment at the test frequency and the test spread code, and set it to the receiving mode in the beginning. When using external test device, connect with the test equipment by line connection. |
| Test Configuration: | |

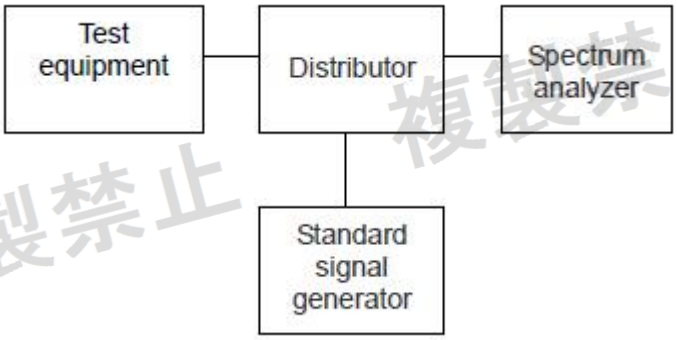


| | |
|---|---|
| Test Procedure: | |

1. Set the standard signal generator as follows:
   Carrier frequency: Center frequency of receiving frequency band of test equipment
   Modulation: No modulation.(note1)
   Output level: regulated level on antenna input of test equipment
   Note 1: The un-modulated carrier in the center frequency, when the carrier sense function of test equipment is not worked, if necessary, change the frequency or modulate it.
2. Set the spectrum analyzer as follows:
   Center frequency: Center frequency of the bandwidth used.(note2)
   Sweep frequency band: 50MHz(note2)
   Resolution bandwidth: Approximately 1 MHz
   Video bandwidth: Comparable level with resolution bandwidth
   Trigger condition: Free-run
   Detective mode: positive peak
   Note 2: Under 26MHz of OFDM or other modulated method that with transmit function, set sweep frequency band as 0Hz, detective mode as sample, center frequency as the carrier frequency from 13MHz to 19MHz.
3. Set the test equipment to the transmitting operation with the output of standard signal generator OFF, and confirm that it emits over 26MHz occupied frequency bandwidth OFDM radio wave, by using spectrum analyzer.
4. Set the test equipment to the receiving mode.

5. With the output of standard signal generator ON, set the test equipment to the transmitting operation, and confirm that it does not emit over 26MHz occupied frequency bandwidth OFDM radio wave, by using spectrum analyzer.

**Note:**

Note: This Item is not applicable

## 7.6 Frequency Error

Test Requirement: MIC Notice No.88 Appendix No. 43

Tolerance of frequency: $\pm 50\times10^{-6}$

Test Status: Test the EUT in transmitting mode with modulation.

Test Configuration:

Test Procedure:

1. Test Conditions:

   Frequency Counter or Spectrum Analyzer is used for measurement.

2. EUT conditions:

   Modulation/Spread/Hopping ON, CW Tx

3. Spectrum Analyzer conditions:

   Frequency: Test Frequency
   Span 1MHz
   RBW 10 kHz (Modulation OFF),
   VBW 10 kHz (Modulation OFF),
   Sweep Time Auto
   Detector mode Positive peak
   Indication mode Max hold

**Test result:**

***Please refer to Appendix B.***

NOTE:

*1).*The nominal frequency shall be confirmed by the applicant and test lab.

*2). Worst case data at 1Mbps at IEEE 802.11b; 6Mbps at IEEE 802.11g; 6.5Mbps at IEEE 802.11n HT20;*

**Test result: The unit does meet the requirements.**

## 7.7 Occupied Bandwidth (99%)

Test Requirement: MIC Notice No.88 Appendix No. 43

OFDM (802.11n(HT40)): 26-40MHz
OFDM (802.11g/n(HT20)) : 26MHz or less
DSSS(802.11b) : 26MHz or less

Test Status: Pre-Scan has been conducted to determine the worst-case mode from all possible combinations between available modulations, data rates and antenna ports (if EUT with antenna diversity architecture). Following channel(s) was (were) selected for the final test as listed below.

Test Configuration:

Test Procedure:

1. Test Conditions:
   Spectrum Analyzer is used for measurement.
2. EUT conditions:
   Modulation/Spread/Hopping ON
   For equipment using diffusion code, set to the test diffusion code and modulate with standard coding test signal.
3. Spectrum Analyzer conditions:
   Frequency: Test Frequency
   Span 40MHz (DSSS,OFDM)
   RBW 300 kHz
   VBW 300 kHz
   Sweep Time Auto
   detector mode Positive peak
   Indication mode Max hold
   OBW 99%

**Test result:**

***Please refer to Appendix B.***

NOTE:

*1).*The nominal frequency shall be confirmed by the applicant and test lab.

*2). Worst case data at 1Mbps at IEEE 802.11b; 6Mbps at IEEE 802.11g; 6.5Mbps at IEEE 802.11n HT20;*

**Test result: The unit does meet the requirements.**

## 7.8 Spread Spectrum Bandwidth (90%)

Test Requirement: MIC Notice No.88 Appendix No. 43

500 kHz or more

Test Status: Pre-Scan has been conducted to determine the worst-case mode from all possible combinations between available modulations, data rates and antenna ports (if EUT with antenna diversity architecture). Following channel(s) was (were) selected for the final test as listed below.

Test Configuration:

Test Procedure:

1. Test Conditions:

   Spectrum Analyzer is used for measurement.

2. EUT conditions:

   Modulation/Spread/Hopping ON

   For equipment using diffusion code, set to the test diffusion code and modulate with standard coding test signal.

3. Spectrum Analyzer conditions:

   Frequency: Test Frequency
   Span 40MHz (DSSS,OFDM)
   RBW 300kHz
   VBW 300kHz
   Sweep Time Auto
   detector mode Positive peak
   Indication mode Max hold

   OBW 90%

**Test result:**

**Please refer to Appendix B.**

NOTE:

*1). Worst case data at 1Mbps at IEEE 802.11b; 6Mbps at IEEE 802.11g; 6.5Mbps at IEEE 802.11n HT20;*

**Test result: The unit does meet the requirements.**

## 7.9 Antenna Power

Test Requirement: MIC Notice No.88 Appendix No. 43
10mW/MHz for 802.11b/g/n(HT20); 5mW/MHz for 802.11n(HT40)

Test Status: Pre-Scan has been conducted to determine the worst-case mode from all possible combinations between available modulations, data rates and antenna ports (if EUT with antenna diversity architecture). Following channel(s) was (were) selected for the final test as listed below.

Test Configuration:

Test Procedure:

1. Test Conditions:

   Power meter or Spectrum Analyzer is used for measurement.

2. EUT conditions:

   Modulation/Spread/Hopping ON

   For equipment using diffusion code, set to the test diffusion code and modulate with standard coding test signal.

3. Spectrum Analyzer conditions:

   Step 1:
   Frequency: Test Frequency
   Span 40 MHz (DSSS,OFDM)
   RBW 1 MHz
   VBW 3 MHz
   Sweep Time Auto
   detector mode Positive peak
   Indication mode Max hold
   When the trace is complete, find the peak value of the power envelope and record the frequency.
   Step 2:
   Frequency: Equal to the frequency recorded in step 1
   Span Zero
   RBW 1 MHz
   VBW 1 MHz
   Sweep Time Auto
   detector mode Positive peak
   Indication mode Max hold

**Test result:**

**Please refer to Appendix B**

*1). Worst case data at 1Mbps at IEEE 802.11b; 6Mbps at IEEE 802.11g; 6.5Mbps at IEEE 802.11n HT20;*

Antenna Power calculate method:

Antenna Power(mW/MHz) $=10^{(\text{measured value (dBm/MHz)} / 10)}$

**Test result: The unit does meet the requirements.**

## 7.10 Spurious Emissions of Tx

Test Requirement: MIC Notice No.88 Appendix No. 43

(1)30 to 1000MHz: 0.25μW/100kHz
(2) Below 2387 MHz : 2.5μW/MHz
(3) 2387 to 2400 MHz : 25μW/MHz
(4) 2483.5 through 2496.5 MHz : 25μW/MHz
(5) Over 2496.5 MHz : 2.5μW/MHz

Test Status: Pre-Scan has been conducted to determine the worst-case mode from all possible combinations between available modulations, data rates and antenna ports (if EUT with antenna diversity architecture). Following channel(s) was (were) selected for the final test as listed below.

Test Configuration:

Test Procedure:

1. Test Conditions:
   Spectrum Analyzer is used for measurement.
2. EUT conditions:
   Modulation/Spread/Hopping ON
   For equipment using diffusion code, set to the test diffusion code and modulate with standard coding test signal.
3. Spectrum Analyzer conditions:
   Step 1
   All spurious are measured from 30 MHz to 13 GHz by peak mode.
   Step 2
   IF the value measured by Step1 is 2 dB or less, measure in average mode.
   Test setup for Step 1:
   Frequency: 30 MHz – 1000 MHz,
   RBW 100 kHz (Below 1000 MHz), VBW 100 kHz (Below 1000 MHz)
   1000 MHz – 2400 MHz, 2483.5 MHz –13 GHz
   RBW 1 MHz (above 1000 MHz), VBW 1 MHz (above 1000 MHz)
   Sweep Time Auto
   detector mode Positive peak, Indication mode Max hold
   Test setup for Step 2:
   Frequency: Spurious Frequency
   RBW 100 kHz (Below 1000 MHz), VBW 100 kHz (Below 1000 MHz)
   RBW 1 MHz (above 1000 MHz), VBW 1 MHz (above 1000 MHz)
   Sweep Time Auto,
   Detector mode Sample, Indication mode Max hold

**Test result:**

**Please refer to Appendix B.**

*Note:*

*1). Worst case data at 1Mbps at IEEE 802.11b; 6Mbps at IEEE 802.11g; 6.5Mbps at IEEE 802.11n HT20;*

*2).* The limit for the frequency range of 30MHz - 1GHz is 2.5uW/1MHz,but test result is dBm/100kHz.

Value(dBm/1MHz) = Measurement(dBm/100kHz) + 10*log(1MHz/100KHz)

Value(uW) = 10^(Value(dBm) / 10)*1000

**Test result: The unit does meet the requirements.**

## 7.11 RF Accessibility

**Standard requirement**

Article 2, Item (19) Notice 88 Appendix 43, 44, 45

The EUT shall be constructed in such a way that sensitive RF parts, (like modulation and oscillator parts) cannot be reached easily by the user. These parts shall be covered by soldered metal caps or glue or by other mechanical covers. If the covers are fixed with screws, these shall be not the common type(s) like a Phillips, but special versions like Torx, so that the user cannot open the device with common tools.

We apply the product for Japan RF certification. We use shiled for preventing end- user to access RF parts easily. The shiled can only be opened by forced, which will result in damaging the case.Please refer to following for photo for details.

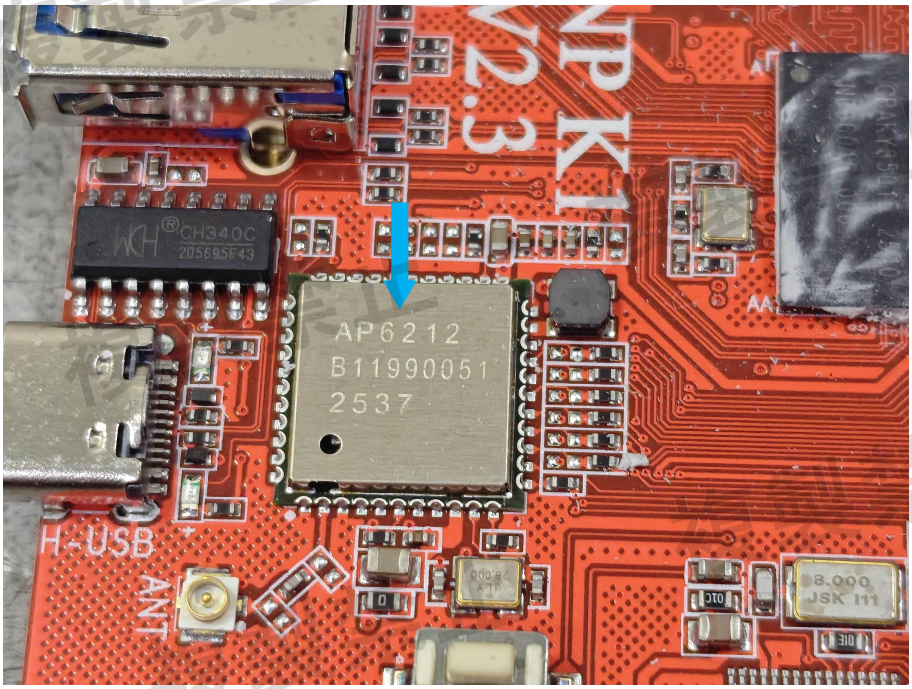

## 7.12 Spurious Emissions of Rx

Test Requirement: MIC Notice No.88 Appendix No. 43

(1) Below 1 GHz : 4 nW

(2) 1 GHz and over : 20 nW

Test Status: Pre-Scan has been conducted to determine the worst-case mode from all possible combinations between available modulations, data rates and antenna ports (if EUT with antenna diversity architecture). Following channel(s) was (were) selected for the final test as listed below.

Test Configuration:

Test Procedure:

1. Test Conditions:

   Spectrum Analyzer is used for measurement.

2. EUT conditions:

   Modulation/Spread/Hopping ON

   For equipment using diffusion code, set to the test diffusion code and modulate with standard coding test signal.

3. Spectrum Analyzer conditions:

   Step 1

   All spurious are measured from 30 MHz to 13 GHz by peak mode.

   Step 2

   IF the value measured by Step1 is 2 dB or less, measure in average mode.

   Test setup for Step 1:

   Frequency: 30 MHz – 1000 MHz , 1GHz –13 GHz

   RBW 100 kHz (30 – 1GHz) , 1 MHz (over 1GHz)

   VBW 100 kHz (30 – 1GHz) , 1 MHz (over 1GHz)

   Sweep Time Auto

   detector mode Positive peak

   Indication mode Max hold

   Test setup for Step 2:

   Frequency: Spurious Frequency

   Span 0 Hz

   RBW 100 kHz (30 – 1GHz) , 1 MHz (over 1GHz)

   VBW 100 kHz (30 – 1GHz) , 1 MHz (over 1GHz)

   Sweep Time Auto

   detector mode Sample

   Indication mode Max hold

**Test result:**

**Please refer to Appendix B.**

*Note:*

*1). Worst case data at 1Mbps at IEEE 802.11b; 6Mbps at IEEE 802.11g; 6.5Mbps at IEEE 802.11n HT20;*

**Test result: The unit does meet the requirements.**

## 7.13 Number of Carriers

### Standard requirement

**LIMIT**

The number of carriers:1 or more/MHz

**TEST RESULTS**

This device has more than 1 sub-carrier in 1MHz, compliances with the requirement.

**--End of Report--**