Models: WGSMSC

You deserve to feel safe, secure & protected™

# IP & SMS Alarm Communicator

## Quick Start Guide

**Thank you for purchasing a Watchguard™ IP & SMS Alarm Communicator**
This Quick Start Guide covers basic setup, installation and use of your communicator.

The WGSMSC is an IP and SMS alarm communicator with battery backup. It is compatible with most contact ID alarm panels. The communicator is able to send contact ID alarm events via SMS over the mobile network to up to 5 mobile devices. It can simultaneously communicate via IP (3G, 4G, Ethernet) to a compatible monitoring centre. Separately, the WGSMSC also supports PSTN pass-through.

| Included Components |
| --- |
| 1 x WGSMSC Alarm Communicator Module |
| 1 x 4G antenna |
| 1 x USB cable |
| 1 x DC adapter |
| 1 x CD-ROM with configuration software |

Rev. 1.2

# 1. Using the WGSMSC as an SMS Communicator

## 1.1 Usage Overview

This section covers how to set up the WGSMSC for use as an SMS alarm communicator. In this configuration, the communicator can notify up to 5 users via SMS for events such as alarm activation and power loss. This turns your alarm into a self monitored alarm system that can be used inline with your monitoring service.

In this section, learn how to connect and configure your communicator via PC, set up which mobile numbers the communicator contacts, alarm events and messages sent in response and how to connect the communicator to the alarm panel.

## 1.2 Installation Requirements

Before installation, ensure the following are accounted for:

- One installed and active alarm panel (Watchguard™ WGAP864 recommended)
- One PC / laptop for communicator configuration via USB
- One active SIM card for SMS communication
- Mobile network connection

## 1.3 Product Diagram

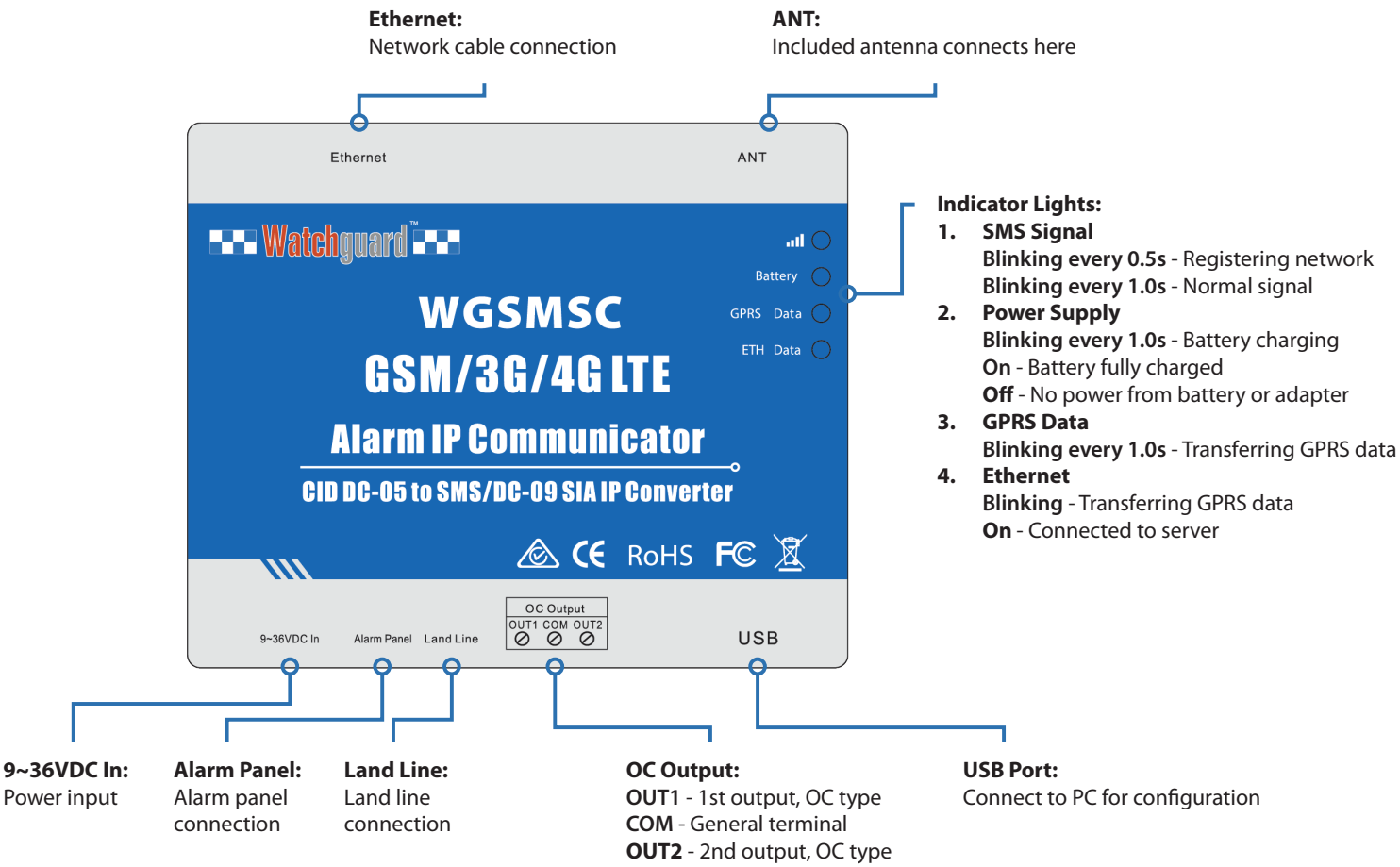


**Fig. 1.3.1:** WGSMSC diagram & connections

# 1.4 Configuration via PC

The WGSMSC is primarily configured via PC-USB connection with the included configuration software. The communicator can also be re-configured to an extent by SMS commands after initial setup is complete.

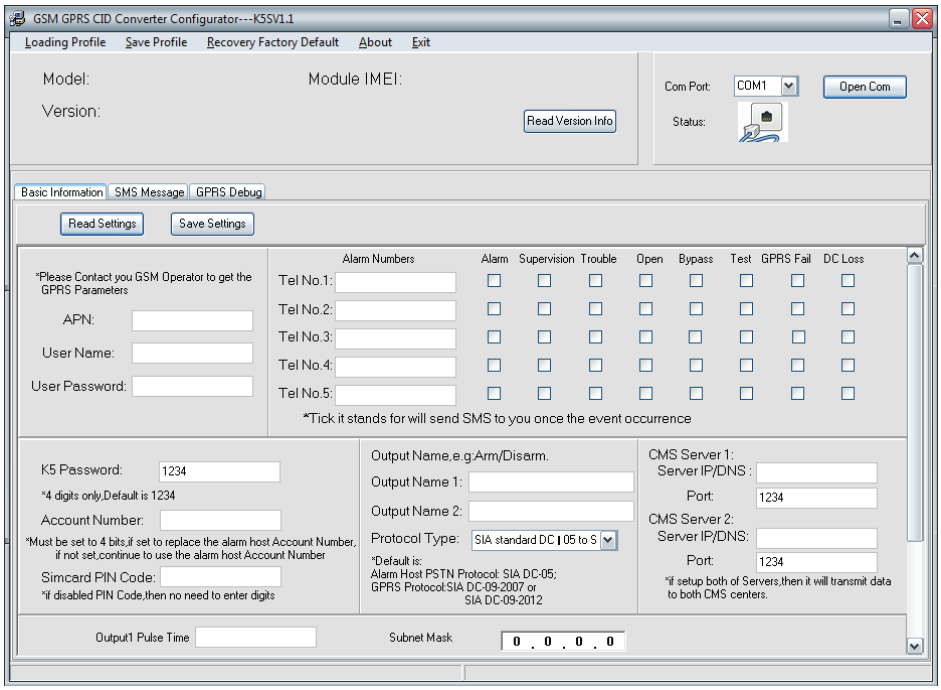


**Fig. 1.4.1:** WGSMSC Configuration Software - Basic Information Tab

## 1.4.1 Connecting the WGSMSC to the PC

1. Power on the WGSMSC with the included adapter and connect it to the PC via the included USB cable.
2. Insert the included CD-ROM and copy **GSM 3G 4G Ethernet CommunicatorK5SV1.1.exe** from the .zip onto the PC**.**
3. Launch the program. It will open to the **Basic Information tab** by default.
4. At the top right of the configuration software, select a Com Port (eg. COM1) and press "Open Com" to confirm.

## 1.4.2 Password Settings

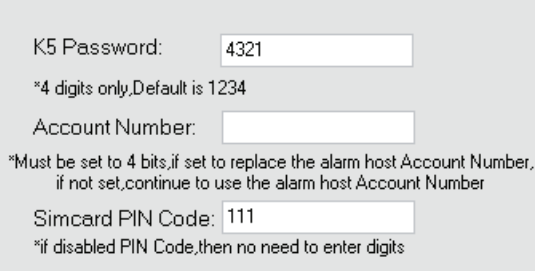


1. **Change the default SMS password,** under "K5 Password". For future reference, write down this password in the provided box, as it is necessary for configuration via SMS.
2. If the SIM card being used for your WGSMSC has a PIN security code, enter that under "Simcard PIN Code".
3. Account Number isn't important for now and can be left as it is.

**SMS Password**

## 1.4.3 Mobile Alarm Settings

1. **Add up to 5 mobile numbers to contact.** These are the numbers that will receive SMS messages when the selected alarm events are activated.
2. Check the notification events that you wish to be alerted of via SMS *(Refer to Fig. 1.2.4.)*. Alarm and DC Loss are recommended.
3. Save all changes with the "Save Settings" button.

| Alarm Event | Situation |
|---|---|
| Alarm | Contact ID Protocol Events Codes |
| Supervision | |
| Trouble | |
| Open | |
| Bypass | |
| Test | |
| GPRS Fail | GPRS message transmission failure |
| DC Loss | External DC power lost |

**Fig. 1.4.2:** Alarm Events

## 1.4.4 SMS Message Settings

Now that mobile numbers and alarm events have been configured, SMS messages can be configured to send messages correspoding to alarm partitions/zones.

1. After saving all changes, select the "**SMS Message" tab**.
2. Enter each alarm partition and zone to be used for SMS alerts.
3. Enter appropriate names for each alarm zone. These names are used in SMS alert messages - if no name is entered, the message will be in illegible code. *(Pictured example: SMS alerts for 8 different alarm zones in the same partition, with each area and sensor type covered.)*
4. Save all changes with the "Save Settings" button.

| SN | Partition | Zone | SMS Text Message(max.59) |
|---|---|---|---|
| 00 | 1 | 01 | Entrance - Front Door |
| 01 | 1 | 02 | Entrance - PIR |
| 02 | 1 | 03 | Hallway - PIR |
| 03 | 1 | 04 | Kitchen - Smoke Detector |
| 04 | 1 | 05 | Kitchen - Glass Break |
| 05 | 1 | 06 | Back - Back Door |
| 06 | 1 | 07 | Back - PIR |
| 07 | 1 | 08 | Yard - PIR |

## 1.5 Alarm Panel Connnection

Now that the communicator has been fully configured, it's ready to be connected to the alarm panel. For this section, the Watchguard™ Professional 8 Zone Alarm Panel (WGAP864) will be used as an example.

1. Unplug the communicator from the PC, then unscrew and open the alarm panel.
2. Insert the SIM card into the SIM slot.
3. Connect the communicator in-line with your alarm panel (refer to Fig. 1.4.4).
4. **For testing purposes, if you have a monitoring centre, do NOT connect the RJ11 cable yet.**
5. Attach the included external antenna to the ANT socket of the communicator.
6. Connect the communicator to a 9~36VDC power supply to turn it on.

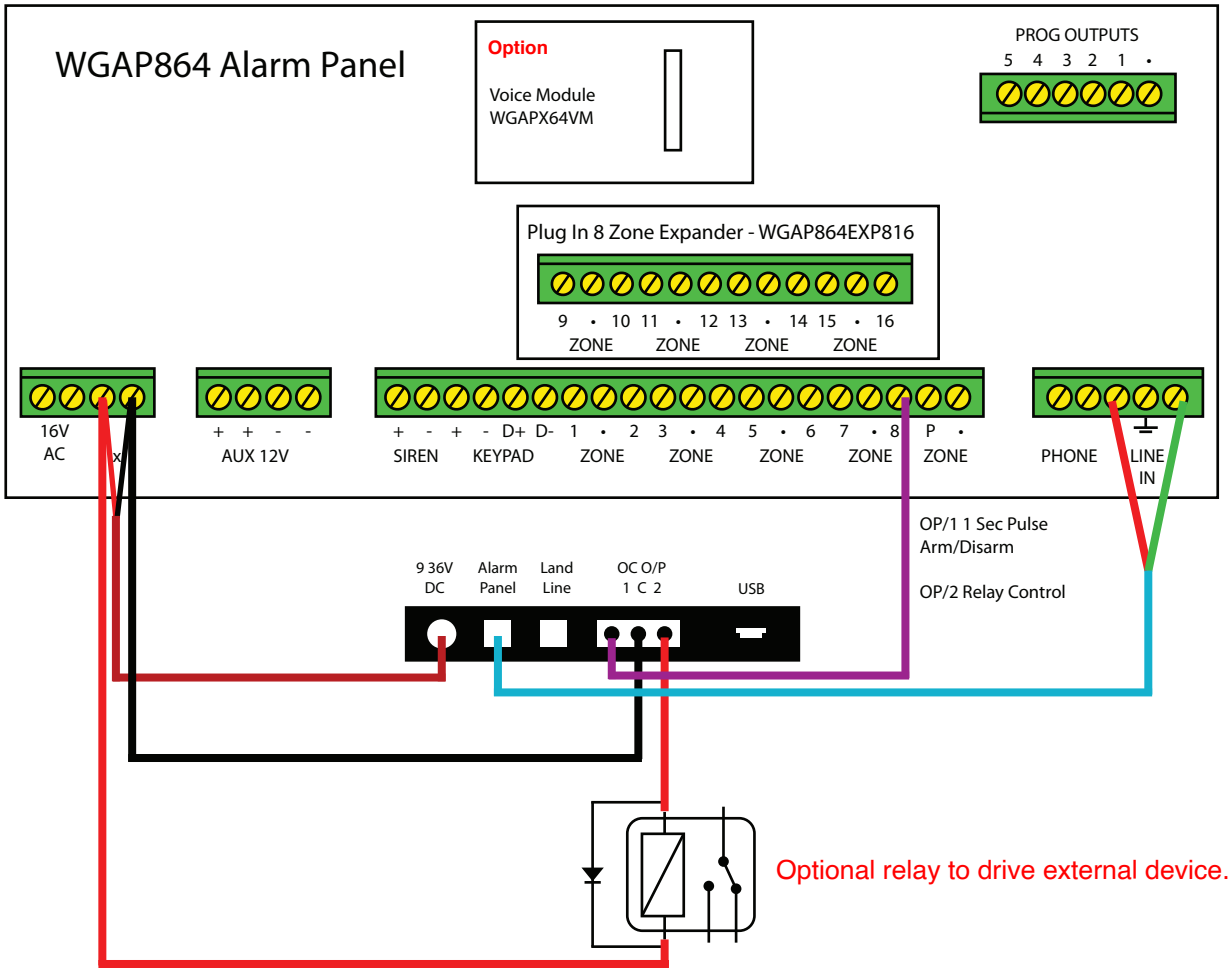


**Fig. 1.5.1:** WGAP864 Alarm Connection Example

# Installers Must Read

**WGAP864 alarm configuration: (Must set up these figures otherwise it won't send SMS)**

- Location 46, Data 1 = ON (Y)
- Location 51 = Report Centre Telephone number (If no reporting centre, any number is okay)
- Location 61 = 4-digit report centre account code. (If no reporting centre, enter any 4-digit non-zero numbers.)

*** If 0000 is used, SMS function is disabled.

## 1.6 Testing

The communicator will now be tested to ensure it powers on correctly, GSM connection is established, alarm events are functioning properly and SMS messages are being received.

1. Confirm the power light is turned on.
   a. Steady on - Unit is on and internal battery is charged
   b. Flashing 1s - Unit is on and battery is charging
   c. Off - No power connected and battery isn't providing power
2. Confirm the GSM indicator moves from 0.5s flashing (registering to network) to 1s flashing (connection to network). If it is not, ensure the following:
   a. The SIM card has been properly inserted.
   b. The inserted SIM card is activated.
   c. The GSM antenna is properly connected and within range.
4. Confirm the alarm communicator is functional by testing an alarm event. The communicator should not be connected to the landline for this step, or it could send a false alarm to your monitoring station.
   a. Arm your alarm.
   b. Trigger a known zone.
   c. Wait to receive an SMS notification to your programmed phone(s) (This may take up to 1 minute depending on telephone carrier and signal strength Ensure the mobile phone also has adequate reception to receive SMS).
   d. Once you've successfully received the SMS message, if you require use of landline for connection to monitoring centre, connect it to the communicator via Landline RJ11 port.

# 2. Using the WGSMSC as a Contact ID (Ethernet/3G/4G) Communicator

## 2.1 Usage Overview

The WGSMSC can also be used as a Contact ID to IP communicator, establishing a connection to your monitoring station via Ethernet, 3G and/or 4G connection. This is useful for buildings that have adopted NBN and those that no longer have access to a direct phone line connection.

## 1.2 Monitoring Station Requirements

To use the WGSMSC communicator with a monitoring station, the monitoring station must have support for SIA DC09 protocol support.

For details on how to connect your WGSMSC for monitoring stations, and for assistance in finding compatible monitoring stations, call us at **+61 2 45452598**

# 3. SMS Command Reference

## 3.1 SMS Command Overview

SMS commands can be sent to the SIM card of the WGSMSC for remote configuration.
*Note: Using the PC configuration software is always recommended, when possible.*

- All SMS commands must be fully CAPITALISED.
- Examples and Return SMS Message are for reference only; these will vary according to your own configurator setup.
- Password below is the default password (1234), replace this with the password you set *in 1.4.2 Basic Information Settings.*

### 3.1.1 SMS Command Error

This error shows up when an invalid SMS format is sent. Double-check your password and command and try again.

| SMS Command | Return SMS Message |
|---|---|
| - | SMS Format Error, Please check Caps Lock in Command! |

### 3.1.2 Change Password

This code changes the communicator's SMS password.

| SMS Command | Return SMS Message |
|---|---|
| [CURRENT PASSWORD]+P+[NEW PASSWORD]<br>*Example: 1234P4321* | 4321, This is the New Password, please remember it carefully. |

### 3.1.3 Device Information

Refer to communicator specifications, current version, etc.

| SMS Command | Return SMS Message |
|---|---|
| [PASSWORD]+EE<br>*Example: 1234EE* | Model: WGSMSC<br>Version: V 1.00 2018-04<br>IMEI: 867965029050313<br>GSM Signal Value: 30 |

### 3.1.4 SMS Notification Numbers

Program the 5 mobile numbers for SMS notification

| Action | SMS Command | Return SMS Message |
|---|---|---|
| Set mobile phone numbers | [PASSWORD]+A+[SERIAL#]+T+[PHONE#]<br>*Example: 1234A3T13570810254* | Tel1: ---<br>Tel2: ---<br>Tel3: 13570810254<br>Tel4: ---<br>Tel5: --- |
| List all numbers | [PASSWORD]+A<br>*Example: 1234A* | Tel1: [PHONE#]<br>Tel2: [PHONE#]<br>Tel3: [PHONE#]<br>Tel4: [PHONE#]<br>Tel5: [PHONE#] |
| Delete existing number | [PASSWORD]+A+[SERIAL#]<br>*Example: 1234A3* | Tel1: [PHONE#]<br>Tel2: [PHONE#]<br>Tel3: ---<br>Tel4: [PHONE#]<br>Tel5: [PHONE#] |

### 3.1.5 Program OC Outputs

Program alarm system OC outputs.

*Note: Except for pulse output time, multiple serial numbers can be configured at once. Eg. 12 means 1st output and 2nd output.*

| Action | SMS Command | Return SMS Message |
|---|---|---|
| Set the name of the OC outputs | [PASSWORD]+DO+[SERIAL#]+T+[NAME]<br>*Example: 1234DO1TOutput 1 for Arm.* | DO1: rename: Output 1 for Arm. |
| Check all OC outputs | [PASSWORD]+DO+[SERIAL#]<br>*Example: 1234DO1* | DO1: Output 1 for Arm. |
| Delete existing OC output | [PASSWORD]+DO+[SERIAL#]+DEL<br>*Example: 1234DO1DEL* | DO1: Output 1 for Arm. |
| Switch relay on | [PASSWORD]+DOC+[SERIAL#]<br>*Example: 1234DOC12* | DO1: ON<br>DO2: ON |
| Switch relay off | [PASSWORD]+DOO+[SERIAL#]+DEL<br>*Example: 1234DOO12* | DO1: OFF<br>DO2: OFF |
| Check current status | [PASSWORD]+DOE<br>*Example: 1234DOE* | DO1: ON/OFF<br>DO2: ON/OFF<br>--- |
| Set pulse output time | [PASSWORD]+DOP+[SERIAL#]+[PULSETIME]<br>*Example: 1234DOP130*<br>*(Time is in seconds, max. 9999s)* | DO1 Pulse Output Time: 30S |
| Check pulse output time | [PASSWORD]+DOT+[SERIAL#]<br>*Example: 1234DOT1* | DO1 Pulse Output Time: 30S |
| Pulse output control | [PASSWORD]+DOP+[SERIAL#]<br>*Example: 1234DOT1* | |

### 3.1.6 Program GPRS IP Server & Port

*Note: Only the 1st server IP can be programmed via SMS commands. Program the 2nd server IP via PC configurator.*

| Action | SMS Command | Return SMS Message |
|---|---|---|
| IP settings | [PASSWORD]+IP+[IP ADDRESS]+P+[PORT#]<br>*Example: 1234IP183.12.162.70P4005* | Server: 182.12.162.70<br>Port: 4005 |
| Check IP settings | [PASSWORD]+IP<br>*Example: 1234IP* | |
| Delete existing IP settings | [PASSWORD]+IPDEL<br>*Example: 1234IPDEL* | |

### 3.1.7 GPRS Data Settings

| Action | SMS Command | Return SMS Message |
|---|---|---|
| GPRS settings | [PASSWORD]+AP;[APN];[USERNAME];[IP P/W]#<br>*Example: 1234APeverywhere;esecure;password#* | APN: everywhere<br>User Name: esecure<br>Password: password |
| Check GPRS settings | [PASSWORD]+AP<br>*Example: 1234AP* | |
| Delete existing GPRS settings | [PASSWORD]+APDEL<br>*Example: 1234APDEL* | |

Watchguard™

**www.watchguardsystems.com**

v28052019