EUROFINS ELECTRICAL TESTING SERVICE (SHENZHEN) CO., LTD.

RADIO TEST - REPORT

Japan Compliance Test Report

Test Report Number: EFGX25070114-IE-02-E01

複製禁止

Content

1	**General Information**	**3**
1.1	Notes	3
1.2	Testing laboratory	4
1.3	Details of approval holder	4
1.4	Details of Manufacturer	4
1.5	Application details	5
1.6	Test item	5
1.7	Standards	6
2	**Technical test**	**7**
2.1	Summary of test results	7
2.2	Test environment	7
2.3	Measurement uncertainty	7
2.4	Test mode	8
2.5	Test equipment utilized	9
2.6	Auxiliary Equipment Used during Test:	10
2.7	Test software information:	10
2.8	Test Environments	10
2.9	Test results	11
3	**Technical Requirement**	**12**
3.1	Antenna Power	12
3.2	Tolerances for Antenna Power	14
3.3	Frequency Tolerance	16
3.4	Occupied Frequency Bandwidth	18
3.5	Spread Bandwidth and spreading factor	20
3.6	Transmitter Spurious Emissions (Conducted) (For transmitter)	22
3.7	Secondary Radiated Emissions (Conducted) (For receiver)	25
3.8	Carrier Sensing	27
3.9	Interference prevention function	29

1 General Information

1.1 Notes

The results of this test report relate exclusively to the item tested as specified in chapter “Description of test item” and are not transferable to any other test items.

Eurofins Electrical Testing Service (Shenzhen) Co., Ltd. is not responsible for any generalisations and conclusions drawn from this report. Any modification of the test item can lead to invalidity of test results and this test report may therefore be not applicable to the modified test item.

The test report may only be reproduced or published in full. Reproducing or publishing extracts of the report requires the prior written approval of the Eurofins Electrical Testing Service (Shenzhen) Co., Ltd.

This document is subject to the General Terms and Conditions and the Testing and Certification System of Eurofins Electrical Testing Service (Shenzhen) Co., Ltd., available on request or accessible at www.eurofins.com.

Operator:

2025-07-07		Bruce Zheng / Project Engineer	Bruce Zheng
Date	Eurofins-Lab.	Name / Title	Signature

Technical responsibility for area of testing:

2025-07-07		Albert Xu / Lab Manager	Albert Xu
Date	Eurofins-Lab.	Name / Title	Signature

1.2 Testing laboratory

Eurofins Electrical Testing Service (Shenzhen) Co., Ltd.
1st Floor, Building 2, Chungu, Meisheng Huigu Science and Technology Park, No. 83 Dabao Road, Bao'an District, Shenzhen. P.R.China.
Telephone : +86-755-82911867
Fax : +86-755-82910749
The Laboratory has passed the Accreditation by the American Association for Laboratory Accrediation (A2LA). The Accreditation number is 5376.01.
The Laboratory has been listed by industry Canada to perform electromagnetic emission measurements, The CAB identifier is CN0088.

1.3 Details of approval holder

Name	:	NSS Inc.
Address	:	1-10-40 Otogane, Onojo-shi, Fukuoka-ken
Telephone	:	./.
Fax	:	./.

1.4 Details of Manufacturer

Name	:	ZHEJIANG UNIVIEW TECHNOLOGIES CO.,LTD
Address	:	No. 369,Xietong Road,Xixing Sub-district,Binjiang District,Hangzhou City,310051,Zhejiang Province,China
Telephone	:	./.
Fax	:	./.

1.5 Application details

Date of receipt of application	:	2025-04-21
Date of receipt of test item	:	2025-04-21
Date of test	:	2025-04-21 to 2025-06-17
Date of issue	:	2025-07-07

1.6 Test item

Product type	:	Network Video Recorder
Model name	:	NSU-W2008
Brand	:	./.
Serial number	:	./.
Sample ID	:	250421-24-002
Ratings	:	DC 12V,2A
Test voltage	:	DC 12V
Additional information	:	./.

RadioTechnical data

Frequency range	:	BW 20MHz: 2412MHz—2472MHz BW 40MHz: 2422MHz—2462MHz
Radio Tech.	:	2.4GHz WIFI
Frequency channel	:	13 Channels
Modulation	:	IEEE 802.11b: DSSS IEEE 802.11g/n: OFDM IEEE 802.11ax:OFDMA
Antenna type and max gain	:	External antenna 4.60dBi

The above sample(s) and sample information was/were submitted and identified on behalf of the applicant.
Eurofins assures objectivity and impartiality of the test, and fulfills the obligation of confidentiality for applicant's commercial information and technical documents.

複製禁止

1.7 Standards

Standards	
Article 2 paragraph 1 item (19)	Low power data communications system in the 2.4GHz band
ARIB STD-T66 V3.7	SECOND GENERATION LOW POWER DATA COMMUNICATION SYSTEM/ WIRELESS LAN SYSTEM

2 Technical test

2.1 Summary of test results

No deviations from the technical specification(s) were ascertained in the course of the tests performed. ☒

or

The deviations as specified were ascertained in the course of the tests performed. ☐

This report was an additional report based on the original report EFGX25040384-IE-02-E01, changed the detail of approval holder, model name, product name. Therefore, original data was kept in this report.

2.2 Test environment

Temperature	: 20	...	25°C
Relative humidity content	: 30	...	60%
Air pressure	: 100	...	101kPa

2.3 Measurement uncertainty

The uncertainty is calculated using the methods suggested in the "Guide to the Expression of Uncertainty in Measurement" (GUM) published by ISO.

System Measurement Uncertainty	
Test Items	Extended Uncertainty
Uncertainty for Conducted RF test	RF Power Conducted: 1.16dB Frequency test involved: 1.05×10-7 or 1%

2.4 Test mode

The EUT was set at continuously transmitting and receiving mode during the test.

EUT test voltage requirement:
The RF unit is supplied by DC power. The fluctuation of input voltage to the circuit of RF unit of test equipment is under ±1%, when input voltage from DC 12V to the test equipment is fluctuated by ±10%, So, the DC 12V is choosed in the test report.

The measurement result of the voltage fluctuation at RF circuit when DC 12V +/- 10%.

DC Input	DC 3V
10.8V	3V
12V	3V
13.2V	3V

2.5 Test equipment utilized

EQUIPMENT ID	EQUIPMENT NAME	MODEL NO.	CAL. DATE	CAL. DUE DATE
23-2-13-12	Signal Analyzer	N9010B-544	2025-03-26	2026-03-26
23-2-13-14	Signal Generator	N5183B-520	2025-03-26	2026-03-26
23-2-10-43	Switch and Control Unit	ERIT-E-JS0806-2	2025-03-26	2026-03-26
23-2-10-44	DC power supply	E3642A	2025-03-26	2026-03-26
23-1-07-001	Digital multimeter	FLUKE-179	2025-03-26	2026-03-26
23-2-10-109	Temperature & Humidity Record	YEM-70AL	2025-03-26	2026-03-26
23-2-10-45	temperature test chamber	SG-80-CC-2	2025-03-26	2026-03-26

Remark:
1. Calibration conducted by the National Institute of Information and Communications Technology (NICT)in Japan (hereinafter referred to as "NICT") or a designated calibration agency under Article102-18paragraph (1) in JRL.
2. Correction conducted pursuant to the provisions of Article 135 or Article 144 of the Measurement Act (Act No. 51 of 1992).
3. Calibration conducted in countries except Japan, which shall be equivalent to the calibration conducted by the NICT or a designated calibration agency under Article 102-18 paragraph (1).
4. Calibration, etc. conducted by using measuring instruments and other equipment listed in the right column of appended table No. 3, which shall have been given any type of calibration, etc. listed above from (a) to (C)From JRL Article 24-2, paragraph 4, Item 2.
5. All calibration reports are from CCIC (Shenzhen) Metrology & Testing Service Co.,Ltd.

2.6 Auxiliary Equipment Used during Test:

DESCRIPTION	MANUFACTURER	MODEL NO.	S/N
Laptop	LENOVO	TP00096A	PF-1QH0LV

2.7 Test software information:

Test Software&Version	CRT			
Mode	Power setting			Rate
802.11b	CH1	CH7	CH13	1Mbit
	13	12	12	
802.11g	CH1	CH7	CH13	6Mbit
	5	5	5	
802.11n HT20	CH1	CH7	CH13	MCS0
	5	5	5	
802.11n HT40	CH3	CH7	CH11	MCS0
	8	5	8	
802.11ax HE20	CH1	CH7	CH13	HEMCS0-full RU
	6	8	2	
802.11ax HE40	CH3	CH7	CH11	HEMCS0-full RU
	8	9	7	

2.8 Test Environments

Enviroment Parameter	Temperature	Voltage	Relative Humidity
101.7Kpa	26.5℃	DC 12V	51.3%

2.9 Test results

☒ 1st test ☐ test after modification ☐ production test

Conformance requirement according to Article 2 paragraph 1 item (19) and ARIB STD-T66 Version 3.7/2014-10		Result	Test site
Essential parameter	**Corresponding technical requirements**		
Transmitter requirements	**3.2 (2) Antenna Power**	**PASS**	**Site 1**
	3.2 (3) Tolerances for Antenna Power	**PASS**	**Site 1**
	3.2 (4) Frequency Tolerance	**PASS**	**Site 1**
	3.2 (5) Transmission Rate	**N/A***	**N/A**
	3.2 (7) Occupied Frequency Bandwidth	**PASS**	**Site 1**
	3.2 (8) Spread Bandwidth	**PASS**	**Site 1**
	3.2 (9) Process Gain	**PASS**	**Site 1**
	3.2 (10) Number of Carriers	**N/A***	**N/A**
	3.2 (11) Dwell Time	**N/A***	**N/A**
	3.2 (6) Spurious Emissions	**PASS**	**Site 1**
Receiver requirements	**3.5 (1) Secondary Radiated Emissions**	**PASS**	**Site 1**
	Carrier Sensing	**PASS**	**Site 1**
	3.4 (1) Interference prevention function	**PASS**	**Site 1**

NOTE 1: Measurement taken is within the measurement uncertainty of measurement system.
NOTE 2: "*" N/A is an abbreviation for Not Applicable.
NOTE 3: Test method: MIC notification. No.88 of 2004, Annex 43.

3 Technical Requirement

3.1 Antenna Power

3.1.1 Test Method

1. Connect EUT test port to spectrum analyzer.
2. Set the EUT to transmit maximum output power at 2.4GHz.
3. Then set the EUT to transmit at Highest, Middle, and Lowest frequency and measure the conducted output power separately.
4. RBW=1MHz, VBW≥RBW, Sweep = auto, Detector function = Positive peak, Trace = max hold
5. Repeat above procedures until all frequencies measured were complete.

3.1.2 Test Setup:

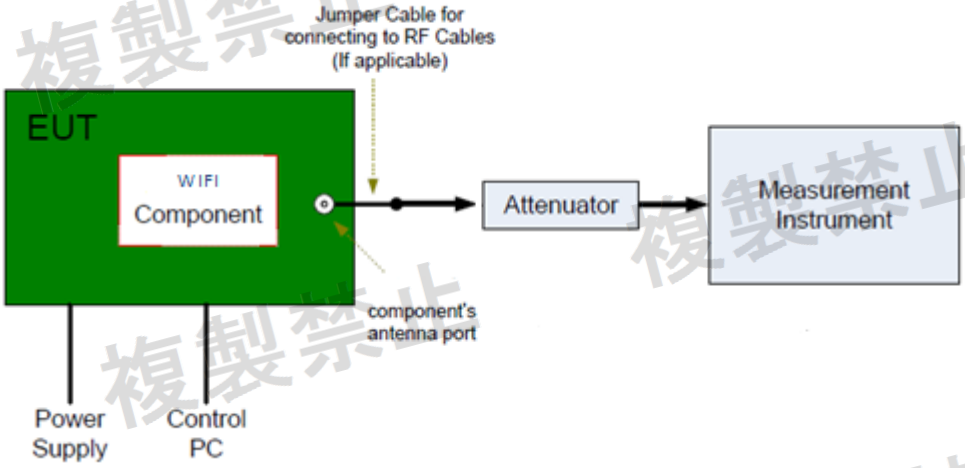

3.1.3 Limit (ARIB STD-T66/ARIB STD-T33, Clause 3.2 (2)-a)

a. The antenna power of a transmitting equipment (with a frequency band of 2,427 – 2,470.75 MHz, for spread spectrum systems using FH systems, hybrid systems of DS and FH, or hybrid systems of FH and OFDM) shall be such that the mean power within a bandwidth of 1 MHz is 3 mW or less in the case of modulation using a standard coding test signal with the same transmission rate as that of the modulation signal.

b. The antenna power of a transmitting equipment using a spread spectrum system other than any of those in “a” and the OFDM system shall be such that the mean power within a bandwidth of 1 MHz is 10 mW or less in the case of modulation using a standard coding test signal with the same transmission rate as that of the modulation signal.

3.1.4 Test result

Antenna Power							
Test Condition	Test Mode	Antenna	Frequen-cy[MHz]	Result (dBm/MHz)	Result (mW/MHz)	Limit (mW/MHz)	Verdict
NTNV	11B	Ant1	2412	7.33	5.408	≤10	PASS
			2442	6.88	4.875	≤10	PASS
			2472	6.91	4.909	≤10	PASS
	11G	Ant1	2412	1.18	1.312	≤10	PASS
			2442	1.23	1.327	≤10	PASS
			2472	0.59	1.146	≤10	PASS
	11N20	Ant1	2412	0.65	1.161	≤10	PASS
			2442	0.32	1.076	≤10	PASS
			2472	0.05	1.012	≤10	PASS
	11N40	Ant1	2422	0.62	1.153	≤5	PASS
			2442	0.27	1.064	≤5	PASS
			2462	-0.45	0.902	≤5	PASS
	11AX20	Ant1	2412	5.24	3.342	≤10	PASS
			2442	4.67	2.931	≤10	PASS
			2472	0.65	1.161	≤10	PASS
	11AX40	Ant1	2422	3.40	2.188	≤5	PASS
			2442	4.10	2.570	≤5	PASS
			2462	2.57	1.807	≤5	PASS

EIRP							
Test Condition	Test Mode	Antenna	Fre-quency [MHz]	Result (dBm/MHz)	EIRP (dBm/MHz)	Limit (dBm/MHz)	Verdict
NTNV	11B	Ant1	2412	7.33	11.93	≤12.14	PASS
			2442	6.88	11.48	≤12.14	PASS
			2472	6.91	11.51	≤12.14	PASS
	11G	Ant1	2412	1.18	5.78	≤12.14	PASS
			2442	1.23	5.83	≤12.14	PASS
			2472	0.59	5.19	≤12.14	PASS
	11N20	Ant1	2412	0.65	5.25	≤12.14	PASS
			2442	0.32	4.92	≤12.14	PASS
			2472	0.05	4.65	≤12.14	PASS
	11N40	Ant1	2422	0.62	5.22	≤9.13	PASS
			2442	0.27	4.87	≤9.13	PASS
			2462	-0.45	4.15	≤9.13	PASS
	11AX20	Ant1	2412	5.24	9.84	≤12.14	PASS
			2442	4.67	9.27	≤12.14	PASS
			2472	0.65	5.25	≤12.14	PASS
	11AX40	Ant1	2422	3.40	8.00	≤9.13	PASS
			2442	4.10	8.70	≤9.13	PASS
			2462	2.57	7.17	≤9.13	PASS

3.2 Tolerances for Antenna Power

3.2.1 Test Method

6. Connect EUT test port to spectrum analyzer.
7. Set the EUT to transmit maximum output power at 2.4GHz.
8. Then set the EUT to transmit at Highest, Middle, and Lowest frequency and measure the conducted output power separately.
9. RBW=1MHz, VBW≥RBW, Sweep = auto, Detector function = Average, Meas=channel power Meas setup=1MHz, Trace = max hold
10. Repeat above procedures until all frequencies measured were complete.

3.2.2 Test Setup:

The WIFI component's antenna ports(s) of the EUT are connected to the measurement instrument per an appropriate attenuator. The EUT is controlled by PC/software to emit the specified signals for the purpose of measurements.

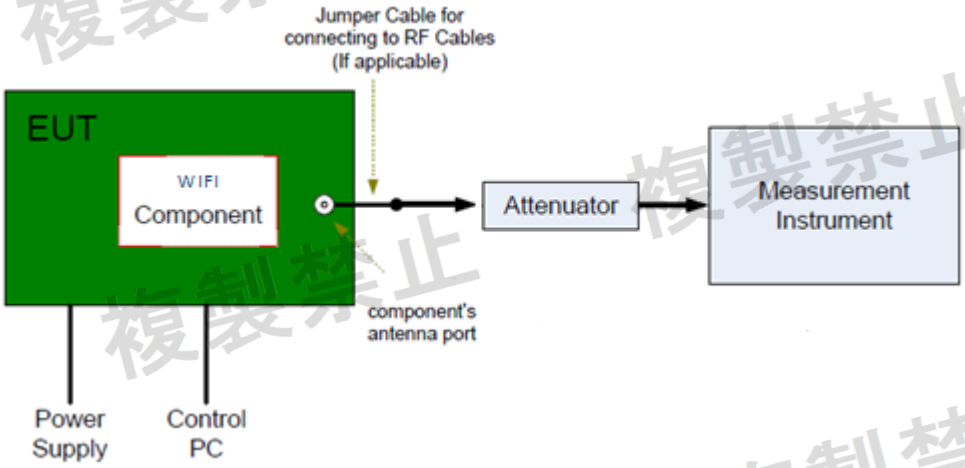

3.2.3 Limit (ARIB STD-T66/ARIB STD-T33, Clause 3.2 (3)

Upper and lower limits of the tolerance for antenna power shall be 20% and 80%, respectively. Note that they represent the tolerance for the maximum rated antenna power and that no upper and lower limits of the tolerance are regulated in the case of antenna power reduction for communications reasons.

3.2.4 Test result

Tolerance								
Test Condition	Test Mode	Antenna	Frequency [MHz]	Power (mW/MHz)	Rated Power (mW/MHz)	Result (%)	Limit (%)	Ver-dict
NTNV	11B	Ant1	2412	5.408	10	-45.92	-80 to +20	PASS
			2442	4.875	10	-51.25	-80 to +20	PASS
			2472	4.909	10	-50.91	-80 to +20	PASS
	11G	Ant1	2412	1.312	5	-73.76	-80 to +20	PASS
			2442	1.327	5	-73.46	-80 to +20	PASS
			2472	1.146	5	-77.08	-80 to +20	PASS
	11N20	Ant1	2412	1.161	4	-76.78	-80 to +20	PASS
			2442	1.076	4	-78.48	-80 to +20	PASS
			2472	1.012	4	-79.76	-80 to +20	PASS
	11N40	Ant1	2422	1.153	3.5	-67.06	-80 to +20	PASS
			2442	1.064	3.5	-69.60	-80 to +20	PASS
			2462	0.902	3.5	-74.23	-80 to +20	PASS
	11AX20	Ant1	2412	3.342	5	-33.16	-80 to +20	PASS
			2442	2.931	5	-41.38	-80 to +20	PASS
			2472	1.161	5	-76.78	-80 to +20	PASS
	11AX40	Ant1	2422	2.188	5	-56.24	-80 to +20	PASS
			2442	2.570	5	-48.60	-80 to +20	PASS
			2462	1.807	5	-63.86	-80 to +20	PASS

Note: Deviation = (Output power – Declared Output Power) / Declared Output Power * 100%

3.2.5 Result

The equipment met the requirement of this clause.

3.3 Frequency Tolerance

3.3.1 Test Method:

1. Connect EUT test port to spectrum analyzer.
2. Set the EUT to transmit maximum output power at 2.4GHz.
3. Then set the EUT to transmit at Highest, Middle, and Lowest frequency and measure the conducted output power separately.
4. RBW=1MHz, VBW≥3RBW, Sweep = auto, Detector function = peak, Trace = max hold
5. Repeat above procedures until all frequencies measured were complete.

3.3.2 Test Setup:

The WIFI component's antenna ports(s) of the EUT are connected to the measurement instrument per an appropriate attenuator. The EUT is controlled by PC/software to emit the specified signals for the purpose of measurements.

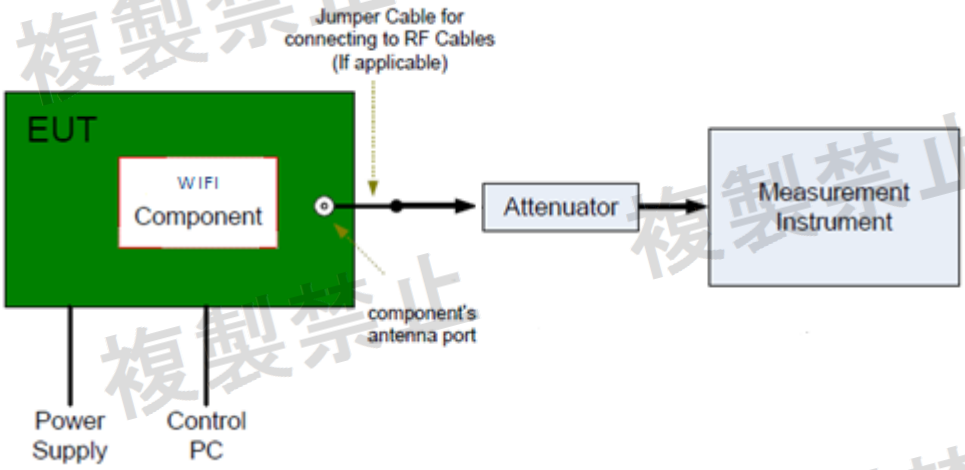

3.3.3 Limit (ARIB STD-T66/ ARIB STD-T33, Clause 3.2 (4))

Tolerance of frequency: $\pm 50 \times 10^{-6}$.

3.3.4 Test Result

TestCondi-tion	Test-Mode	Antenna	Frequen-cy[MHz]	CenterFreq [MHz]	Result[ppm]	Limit[ppm]	Verdict
NTNV	20MHz	Ant1	2412	2412	0.00000	±50	PASS
			2442	2442	0.00000	±50	PASS
			2472	2472	0.00000	±50	PASS
	40MHz	Ant1	2422	2422	0.00000	±50	PASS
			2442	2442	0.00000	±50	PASS
			2462	2462	0.00000	±50	PASS

Note: Frequency Tolerance (ppm) = [Measurement Frequency - Center Frequency] / Center Frequency*10^6

Test Result: Pass

Please refer to the appendix A for test plots
The equipment met the requirement of this clause.

3.4 Occupied Frequency Bandwidth

3.4.1 Test Method:

1. Connect EUT test port to spectrum analyzer.
2. Set the EUT to transmit maximum output power at 2.4GHz.
3. Then set the EUT to transmit at Highest, Middle, and Lowest frequency separately.
4. Set Ocuppied bandwidth 99%
5. Set RBW=300KHz , VBW ≥ RBW.
6. Set Sweep = auto.
7. Set Detector function = peak.
8. Allow the trace to stabilize.
9. Repeat above procedures until all frequencies measured were complete.

3.4.2 Test Setup:

The WIFI component's antenna ports(s) of the EUT are connected to the measurement instrument per an appropriate attenuator. The EUT is controlled by PC/software to emit the specified signals for the purpose of measurements.

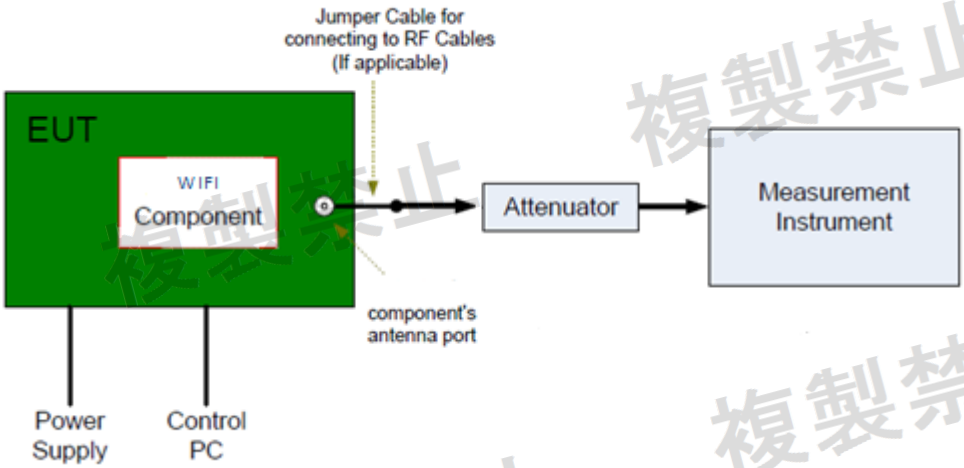

3.4.3 Limit (ARIB STD-T66/ARIB STD-T33, Clause 3.2 (7))

Permissible value for occupied bandwidth using the FH system, a hybrid system combining DS and FH systems, or a hybrid system combining FH and OFDM systems shall be 83.5 MHz or less, while necessary bandwidth (minimum occupied bandwidth sufficient to ensure information transmission of required quality at a required transmission rate for the system used under specified conditions for a given emission type) using a system other than any of the above shall be 26 MHz or less.

3.4.4 Test Result

TestCondition	Test-Mode	Antenna	Frequen-cy[MHz]	Result [MHz]	Limit [MHz]	Verdict
NTNV	11B	Ant1	2412	14.180	≤26	PASS
			2442	14.169	≤26	PASS
			2472	14.178	≤26	PASS
	11G	Ant1	2412	16.765	≤26	PASS
			2442	17.057	≤26	PASS
			2472	16.838	≤26	PASS
	11N20SISO	Ant1	2412	18.293	≤26	PASS
			2442	18.268	≤26	PASS
			2472	16.792	≤26	PASS
	11N40SISO	Ant1	2422	36.268	26-40	PASS
			2442	36.185	26-40	PASS
			2462	36.301	26-40	PASS
	11AX20SISO	Ant1	2412	19.100	≤26	PASS
			2442	19.184	≤26	PASS
			2472	19.258	≤26	PASS
	11AX40SISO	Ant1	2422	37.834	26-40	PASS
			2442	37.769	26-40	PASS
			2462	37.845	26-40	PASS

Test Result: Pass

Please refer to the appendix C for test plots
The equipment met the requirement of this clause.

3.5 Spread Bandwidth and spreading factor

3.5.1 Test Method:

1. Connect EUT test port to spectrum analyzer.
2. Set the EUT to transmit maximum output power at 2.4GHz.
3. Then set the EUT to transmit at Highest, Middle, and Lowest frequency separately.
4. Set Ocuppied bandwidth 90%
5. Set analyzer center frequency to DTS channel center frequency.
6. Detector = peak.
7. Sweep time = auto couple.
8. Trace mode = max hold.
9. Allow trace to fully stabilize.
10. Repeat above procedures until all frequencies measured were complete.

3.5.2 Test Setup:

The WIFI component's antenna ports(s) of the EUT are connected to the measurement instrument per an appropriate attenuator. The EUT is controlled by PC/software to emit the specified signals for the purpose of measurements.

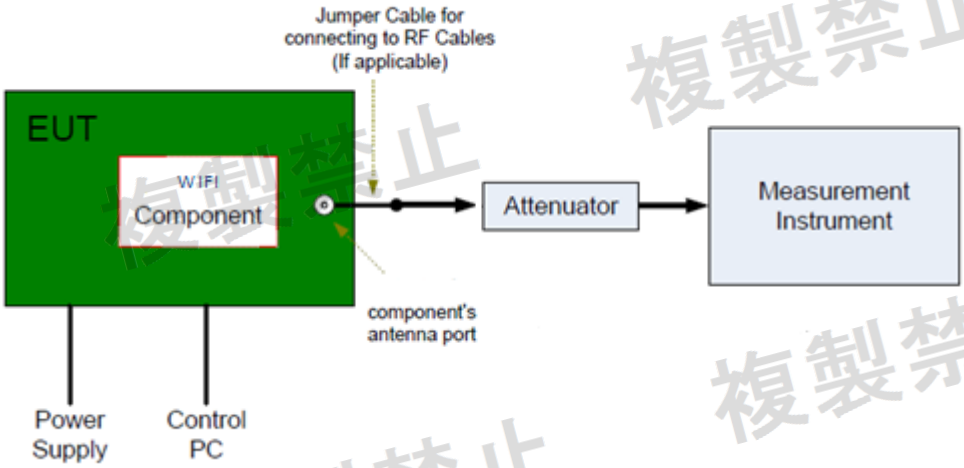

3.5.3 Limit (ARIB STD-T66/ARIB STD-T33, Clause 3.2 (8))

In spread spectrum systems, spread bandwidth (which refers to a frequency bandwidth with an upper limit and lower limit such that each of the mean powers radiated above the upper frequency limit and below the lower frequency limit is equal to 5 % of the total mean power radiated; this also applies hereafter) shall be 500 kHz or more.

Process gain (value obtained by dividing the spread bandwidth by a frequency equal to the transmission rate of the modulation signal; this also applies hereafter) in the spread spectrum system shall be 5 or more.

3.5.4 Test Result

TestCondition	Test-Mode	Antenna	Frequen-cy[MHz]	Result [MHz]	Limit [MHz]	Spread Factor	Limit	Verdict
NTNV	11B	Ant1	2412	9.391	≥0.5	6.830	>5	PASS
			2442	9.366	≥0.5	6.812	>5	PASS
			2472	9.373	≥0.5	6.817	>5	PASS
	11G	Ant1	2412	14.100	≥0.5	---	---	PASS
			2442	14.083	≥0.5	---	---	PASS
			2472	14.144	≥0.5	---	---	PASS
	11N20SISO	Ant1	2412	15.014	≥0.5	---	---	PASS
			2442	15.064	≥0.5	---	---	PASS
			2472	14.144	≥0.5	---	---	PASS
	11N40SISO	Ant1	2422	31.560	≥0.5	---	---	PASS
			2442	31.058	≥0.5	---	---	PASS
			2462	31.665	≥0.5	---	---	PASS
	11AX20SISO	Ant1	2412	16.187	≥0.5	---	---	PASS
			2442	16.055	≥0.5	---	---	PASS
			2472	16.187	≥0.5	---	---	PASS
	11AX40SISO	Ant1	2422	32.462	≥0.5	---	---	PASS
			2442	32.614	≥0.5	---	---	PASS
			2462	32.920	≥0.5	---	---	PASS

Spreading Factor=Spread bandwidth (MHz)/(Transmission rate)

Test Result: Pass

Please refer to the appendix D for test plots
The equipment met the requirement of this clause.

3.6 Transmitter Spurious Emissions (Conducted) (For transmitter)

Test Method:

1. Connect EUT test port to spectrum analyzer.
2. Set the EUT to transmit maximum output power at 2.4GHz.
3. Then set the EUT to transmit at Highest, Middle, and Lowest frequency separately.
4. Set Freqeucny range and limit: 2,387MHz ≤ f ≤ 2,400MHz and 2,483.5MHz < f ≤ 2,496.5MHz 25 μW or less b. 2,387MHz > f and 2,496.5MHz < f 2.5 μW or less
5. Set RBW = 1MHz, VBW ≥ RBW.
6. Set Sweep = auto.
7. Set Detector function = peak.
8. Allow the trace to stabilize.
9. Repeat above procedures until all frequencies measured were complete.

Test Setup:

The WIFI component's antenna ports(s) of the EUT are connected to the measurement instrument per an appropriate attenuator. The EUT is controlled by PC/software to emit the specified signals for the purpose of measurements.

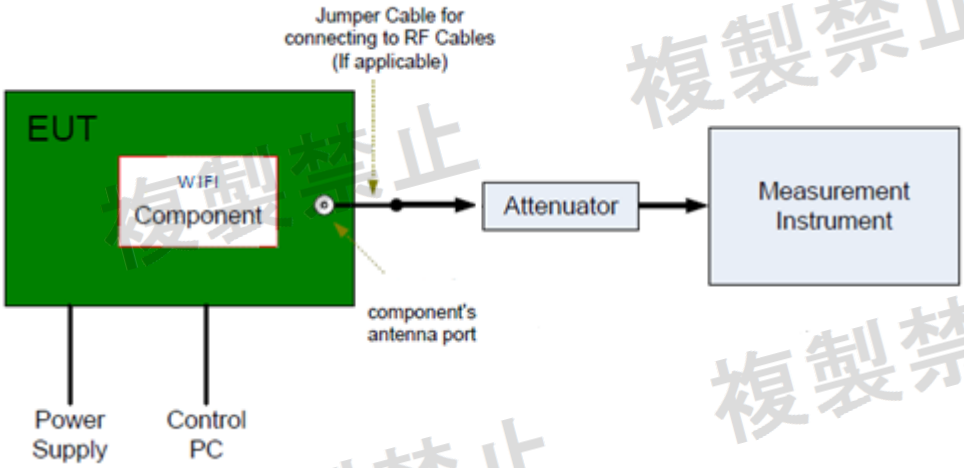

3.6.1 Limit (ARIB STD-T66/ARIB STD-T33, Clause 3.2 (6))

ARIB STD-T66

Permissible mean power of spurious emission of each frequency supplied to a feeder, that is, mean power of spurious emission in the 1 MHz bandwidth at frequency f other than frequency band used shall be as follows: a. 2,387MHz ≤ f ≤ 2,400MHz and 2,483.5MHz < f ≤ 2,496.5MHz 25 μW or less b. 2,387MHz > f and 2,496.5MHz < f 2.5 μW or less.

ARIB STD-T33

Permissible mean power of spurious emission of each frequency supplied to a feeder, that is, mean power of spurious emission in the 1 MHz bandwidth at frequency f other than frequency band used shall be as follows: a. 2,458MHz ≤ f ≤ 2,471MHz and 2,497MHz < f ≤ 2,510MHz 25 μW or less b. 2,458MHz > f and 2,510MHz < f 2.5 μW or less.

3.6.2 Test Result

TestCondi-tion	Test-Mode	Antenna	Fre-quency[MHz]	Freq.Range [MHz]	Result [dBm]	Limit [dBm]	Result [μW]	Limit [μW]	Verdict
NTNV	11B	Ant1	2412	30~1000	-47.92	≤-26	0.01614	≤2.5	PASS
				1000~2387	-44.25	≤-26	0.03758	≤2.5	PASS
				2387~2400	-28.60	≤-16	1.38038	≤25	PASS
				2483.5~2496.5	-35.80	≤-16	0.26303	≤25	PASS
				2496.5~13000	-43.69	≤-26	0.04276	≤2.5	PASS
			2442	30~1000	-48.15	≤-26	0.01531	≤2.5	PASS
				1000~2387	-46.25	≤-26	0.02371	≤2.5	PASS
				2387~2400	-37.04	≤-16	0.19770	≤25	PASS
				2483.5~2496.5	-36.05	≤-16	0.24831	≤25	PASS
				2496.5~13000	-44.50	≤-26	0.03548	≤2.5	PASS
			2472	30~1000	-47.97	≤-26	0.01596	≤2.5	PASS
				1000~2387	-45.79	≤-26	0.02636	≤2.5	PASS
				2387~2400	-36.49	≤-16	0.22439	≤25	PASS
				2483.5~2496.5	-27.30	≤-16	1.86209	≤25	PASS
				2496.5~13000	-44.50	≤-26	0.03548	≤2.5	PASS
	11G	Ant1	2412	30~1000	-48.24	≤-26	0.01500	≤2.5	PASS
				1000~2387	-45.55	≤-26	0.02786	≤2.5	PASS
				2387~2400	-17.01	≤-16	19.9067	≤25	PASS
				2483.5~2496.5	-35.92	≤-16	0.25586	≤25	PASS
				2496.5~13000	-43.91	≤-26	0.04064	≤2.5	PASS
			2442	30~1000	-48.23	≤-26	0.01503	≤2.5	PASS
				1000~2387	-46.89	≤-26	0.02046	≤2.5	PASS
				2387~2400	-37.00	≤-16	0.19953	≤25	PASS
				2483.5~2496.5	-36.31	≤-16	0.23388	≤25	PASS
				2496.5~13000	-44.36	≤-26	0.03664	≤2.5	PASS
			2472	30~1000	-48.76	≤-26	0.01330	≤2.5	PASS
				1000~2387	-46.06	≤-26	0.02477	≤2.5	PASS
				2387~2400	-36.87	≤-16	0.20559	≤25	PASS
				2483.5~2496.5	-17.39	≤-16	18.2389	≤25	PASS
				2496.5~13000	-44.09	≤-26	0.03899	≤2.5	PASS
	11N20SISO	Ant1	2412	30~1000	-47.60	≤-26	0.01738	≤2.5	PASS
				1000~2387	-46.88	≤-26	0.02051	≤2.5	PASS
				2387~2400	-18.36	≤-16	14.5881	≤25	PASS
				2483.5~2496.5	-36.41	≤-16	0.22856	≤25	PASS
				2496.5~13000	-44.74	≤-26	0.03357	≤2.5	PASS
			2442	30~1000	-47.80	≤-26	0.01660	≤2.5	PASS
				1000~2387	-46.61	≤-26	0.02183	≤2.5	PASS
				2387~2400	-35.92	≤-16	0.25586	≤25	PASS
				2483.5~2496.5	-36.24	≤-16	0.23768	≤25	PASS
				2496.5~13000	-44.05	≤-26	0.03936	≤2.5	PASS
			2472	30~1000	-48.72	≤-26	0.01343	≤2.5	PASS
				1000~2387	-46.59	≤-26	0.02193	≤2.5	PASS
				2387~2400	-36.84	≤-16	0.20701	≤25	PASS
				2483.5~2496.5	-20.67	≤-16	8.57038	≤25	PASS
				2496.5~13000	-43.93	≤-26	0.04046	≤2.5	PASS
	11N40SISO	Ant1	2422	30~1000	-47.91	≤-26	0.01618	≤2.5	PASS
				1000~2387	-41.74	≤-26	0.06699	≤2.5	PASS
				2387~2400	-17.27	≤-16	18.7499	≤25	PASS
				2483.5~2496.5	-36.44	≤-16	0.22699	≤25	PASS
				2496.5~13000	-44.14	≤-26	0.03855	≤2.5	PASS
			2442	30~1000	-47.93	≤-26	0.01611	≤2.5	PASS
				1000~2387	-46.97	≤-26	0.02009	≤2.5	PASS

				2387~2400	-36.48	≤-16	0.22491	≤25	PASS
				2483.5~2496.5	-35.64	≤-16	0.27290	≤25	PASS
				2496.5~13000	-44.51	≤-26	0.03540	≤2.5	PASS
			2462	30~1000	-48.58	≤-26	0.01387	≤2.5	PASS
				1000~2387	-45.82	≤-26	0.02618	≤2.5	PASS
				2387~2400	-35.43	≤-16	0.28642	≤25	PASS
				2483.5~2496.5	-18.25	≤-16	14.9623	≤25	PASS
				2496.5~13000	-44.11	≤-26	0.03882	≤2.5	PASS
	11AX20S ISO	Ant1	2412	30~1000	-48.38	≤-26	0.01452	≤2.5	PASS
				1000~2387	-45.70	≤-26	0.02692	≤2.5	PASS
				2387~2400	-16.26	≤-16	23.6592	≤25	PASS
				2483.5~2496.5	-36.53	≤-16	0.22233	≤25	PASS
				2496.5~13000	-44.62	≤-26	0.03451	≤2.5	PASS
			2442	30~1000	-47.84	≤-26	0.01644	≤2.5	PASS
				1000~2387	-46.30	≤-26	0.02344	≤2.5	PASS
				2387~2400	-36.59	≤-16	0.21928	≤25	PASS
				2483.5~2496.5	-36.35	≤-16	0.23174	≤25	PASS
				2496.5~13000	-44.49	≤-26	0.03556	≤2.5	PASS
			2472	30~1000	-48.37	≤-26	0.01455	≤2.5	PASS
				1000~2387	-46.40	≤-26	0.02291	≤2.5	PASS
				2387~2400	-36.68	≤-16	0.21478	≤25	PASS
				2483.5~2496.5	-18.03	≤-16	15.7398	≤25	PASS
				2496.5~13000	-43.58	≤-26	0.04385	≤2.5	PASS
	11AX40S ISO	Ant1	2422	30~1000	-48.46	≤-26	0.01426	≤2.5	PASS
				1000~2387	-37.17	≤-26	0.19187	≤2.5	PASS
				2387~2400	-17.29	≤-16	18.6638	≤25	PASS
				2483.5~2496.5	-36.65	≤-16	0.21627	≤25	PASS
				2496.5~13000	-44.10	≤-26	0.03890	≤2.5	PASS
			2442	30~1000	-48.20	≤-26	0.01514	≤2.5	PASS
				1000~2387	-46.02	≤-26	0.02500	≤2.5	PASS
				2387~2400	-36.61	≤-16	0.21827	≤25	PASS
				2483.5~2496.5	-35.82	≤-16	0.26182	≤25	PASS
				2496.5~13000	-44.66	≤-26	0.03420	≤2.5	PASS
			2462	30~1000	-47.61	≤-26	0.01734	≤2.5	PASS
				1000~2387	-46.21	≤-26	0.02393	≤2.5	PASS
				2387~2400	-37.10	≤-16	0.19498	≤25	PASS
				2483.5~2496.5	-17.85	≤-16	16.4059	≤25	PASS
				2496.5~13000	-42.69	≤-26	0.05383	≤2.5	PASS

3.6.3 Result

Please refer to the appendix E for test plots
The equipment met the requirement of this clause.

3.7 Secondary Radiated Emissions (Conducted) (For receiver)

Test Method:
The test method was refered to the subclause 11.13.3.4 of ANSI C63.10-2013.

1. Connect EUT test port to spectrum analyzer.
2. Set the EUT to transmit maximum output power at 2.4GHz.
3. Then set the EUT to transmit at Highest, Middle, and Lowest frequency separately.
4. Set Frequency range and limit: 30MHz - 1 GHz and 20 nW or 1 GHz – 13GHz
5. Set RBW ≥ 1MHz, VBW ≥ RBW.
6. Set Sweep = auto.
7. Set Detector function = peak.
8. Allow the trace to stabilize.
9. Repeat above procedures until all frequencies measured were complete.

Test Setup:
The WIFI component's antenna ports(s) of the EUT are connected to the measurement instrument per an appropriate attenuator. The EUT is controlled by PC/software to emit the specified signals for the purpose of measurements.

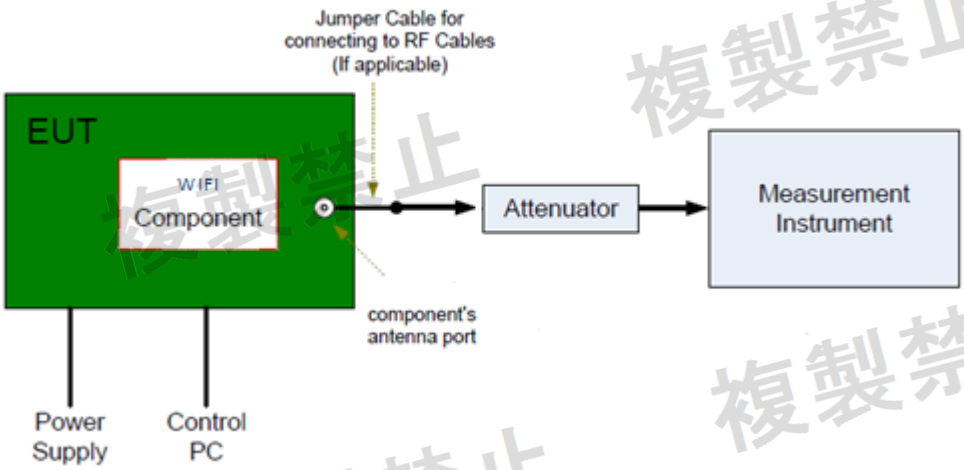

3.7.1 Limit (ARIB STD-T66/ARIB STD-T33, Clause 3.5 (1))

The limit on secondary emissions radiated from the receiving equipment within which the function of other radio equipment will not be impaired shall be, in terms of the power of a dummy antenna circuit that has the same electrical constant as the receiving antenna, 4 nW or less at a frequency below 1 GHz and 20 nW or less at a frequency of 1 GHz or higher as measured using the circuit.

3.7.2 Test Result

TestCondi-tion	Test-Mode	Antenna	Fre-quency[MHz]	Freq.Range [MHz]	Result [dBm]	Limit [dBm]	Result [nW]	Limit [nW]	Ver-dict
NTNV	11N20SISO	Ant1	2412	30~1000	-66.40	≤-54	0.22909	≤4	PASS
				1000~12500	-64.79	≤-47	0.33189	≤20	PASS
			2442	30~1000	-66.51	≤-54	0.22336	≤4	PASS
				1000~12500	-52.13	≤-47	6.12350	≤20	PASS
			2472	30~1000	-66.43	≤-54	0.22751	≤4	PASS
				1000~12500	-64.24	≤-47	0.37670	≤20	PASS
	11N40SISO	Ant1	2422	30~1000	-66.66	≤-54	0.21577	≤4	PASS
				1000~12500	-63.07	≤-47	0.49317	≤20	PASS
			2442	30~1000	-66.42	≤-54	0.22803	≤4	PASS
				1000~12500	-64.55	≤-47	0.35075	≤20	PASS
			2462	30~1000	-65.82	≤-54	0.26182	≤4	PASS
				1000~12500	-62.74	≤-47	0.53211	≤20	PASS
	11AX20SISO	Ant1	2412	30~1000	-66.02	≤-54	0.25003	≤4	PASS
				1000~12500	-64.93	≤-47	0.32137	≤20	PASS
			2442	30~1000	-66.14	≤-54	0.24322	≤4	PASS
				1000~12500	-64.70	≤-47	0.33884	≤20	PASS
			2472	30~1000	-66.69	≤-54	0.21429	≤4	PASS
				1000~12500	-64.46	≤-47	0.35810	≤20	PASS
	11AX40SISO	Ant1	2422	30~1000	-66.32	≤-54	0.23335	≤4	PASS
				1000~12500	-63.85	≤-47	0.41210	≤20	PASS
			2442	30~1000	-61.86	≤-54	0.65163	≤4	PASS
				1000~12500	-64.24	≤-47	0.37670	≤20	PASS
			2462	30~1000	-66.34	≤-54	0.23227	≤4	PASS
				1000~12500	-64.87	≤-47	0.32584	≤20	PASS

3.7.3 Result

Please refer to the appendix F for test plots
The equipment met the requirement of this clause.

3.8 Carrier Sensing

3.8.1 Limit

Stop transmission while carrier detecting

Field intensity in the direction of the maximum gain of a receiving antenna: 100mV/m (It"s a radiated testing detection threshold level).

The conducted detection threshold level shows as below:

(6)式の電界強度 E を既定値の 100mV/m（100dBμV/m）とし、λ(m)を F（MHz）に変換し、P を dBm 単位で表すと（7）式を得る。

$$P[dBm]=22.79+G-20\log F \qquad \cdots\cdots (7)$$

P: 受信機のアンテナ端子に入力される受信電力 [dBm]
G: 受信アンテナの絶対利得 [dBi]
F: キャリア周波数 [MHz]

3.8.2 Test Procedure

A spectrum analyzer or similar device shall be used to observe a sample of the modulated transmitter"s radio frequency power output.

Link EUT and Access Point to Directional Coupler input port. Link Signal Generator and Spectrum Analyzer to test port and output port in the Directional Coupler separately.

A positive Peak Detector function in Spectrum Analyzer must be used. Set the Span to Zero.

Press the Signal Generator on and it will output the Carrier Signal. When the Link breaks off, wait a minute and press the Signal Generator off. After a while, reset the Link and done the test.

3.8.3 TEST RESULTS

11N40-2422MHz, 11AX40-2422MHz
Signal Generator Power Level (dBm) = 22.79 + G - 20log10 (F)

G: Antenna Gain

F: operation frequency

Power lever = 22.79 + 4.60 - 20log10 (2422MHz) = -40.293dBm

11N40-2442MHz, 11AX40-2442MHz
Signal Generator Power Level (dBm) = 22.79 + G - 20log10 (F)

G: Antenna Gain

F: operation frequency

Power lever = 22.79 + 4.60 - 20log10 (2442MHz) = -40.365dBm

11N40-2462MHz, 11AX40-2462MHz
Signal Generator Power Level (dBm) = 22.79 + G - 20log10 (F)

G: Antenna Gain

F: operation frequency

Power lever = 22.79 + 4.60 - 20log10 (2462MHz) = -40.436dBm

Test Result: Pass

3.9 Interference prevention function

3.9.1 Limit

Item	Limits
Identification Code	≥48 bits

Measuring ID code Software
MAC IP List: MAC Scan

3.9.2 Test Procedure

1. In the case that the EUT has the function of automatically transmitting the identification code: a. Transmit the predetermined identification codes form EUT. b. Check the transmitted identification codes with the demodulator.
2. In the case of receiving the identification code: a. Transmit the predetermined identification codes form the counterpart. b . Check if communication is normal. c. Transmit the signals other than predetermined ID codes form the counterpart. d. check if the EUT stops the transmission, or if it displays that identification codes are different from the predetermined ones.

3.9.3 Conditions of Equipment under Test

Required normal mode of the applicable equipment (EUT)

3.9.4 TEST RESULTS

The radio equipment has an identification code. A verification of this code is done before a communication channel is established

MAC address: 72:46:17:A4:7F:DE

Test Result: Pass

End