ENG

VIDEX®
THE POWER TO SECURE

GSM AUDIO INTERCOM KIT

4000 Series GSM Audio Intercom with Proximity

GSM4K
GSM4KCR

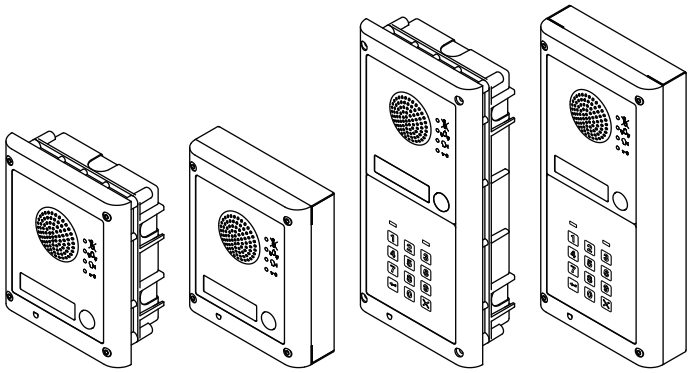

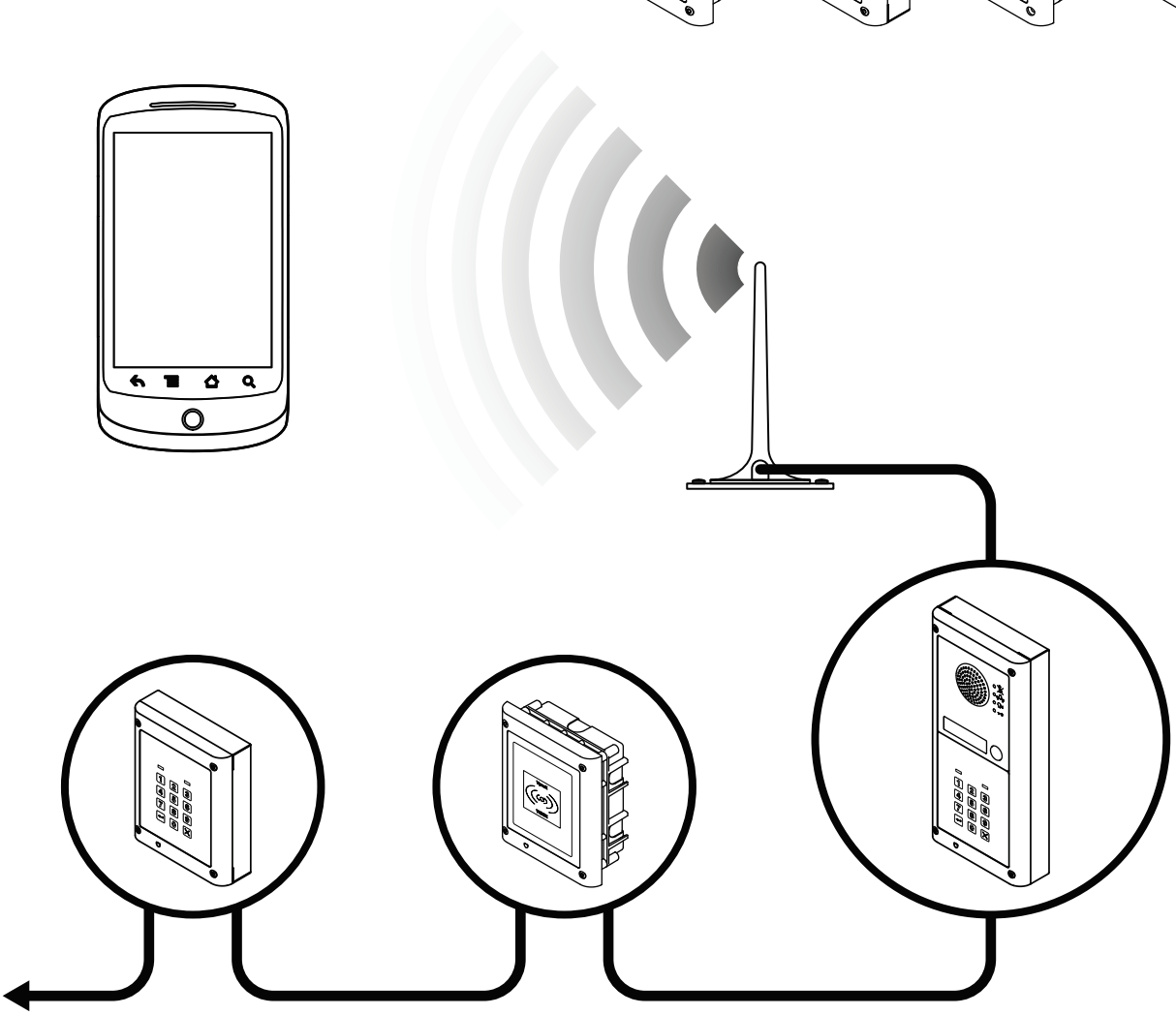

Technical Manual

66250754-EN
V1.2 - 17/10/19

We recommend
This equipment is installed by a Competent Electrician, Security or Communications Engineer.

Declaration of Conformity

EU RoHS DECLARATION OF CONFORMITY

2G version

Telit Communications certifies that the GL865-QUAD V3 (Quad Band GSM850/EGSM900/DCS1800/PCS1900 GPRS Wireless Module) is in conformity with Directive 2011/65/EU of the European Parliament and the Council of 8th June 2011 on the restriction of the use of certain hazardous substances in electrical and electronic equipment. The conformity with the applicable requirements of the Directive 2011/65/EU has been demonstrated against the following harmonized standard: EN 50581:2012 Technical Documentation for the assessment of electrical and electronic products with respect to the restriction of hazardous substances.

3G version

Telit Communications certifies that the UL865-EUR (Dual Band 2G EGSM900/DCS1800 and Dual Band 3G FDD I/FDD VIII Wireless Module) is in compliance with the essential requirements and other relevant provisions of European Directive 1999/5/EC (R&TTE). The conformity with the essential requirements of the Directive 1999/5/EC has been demonstrated against the following harmonized standards:

Article of Directive 1999/5/EC	Harmonized Standard Reference
Health & Safety (R&TTE art. 3.1a)	EN 60950-1:2006 + A11:2009 + A1:2010 + A12:2011 + AC2011 EN 62311:2008
EMC (R&TTE art. 3.1b)	EN 301 489-1 V1.9.2 EN 301 489-7 V1.3.1 EN 301 489-24 V1.5.1
RF Spectrum use (R&TTE art. 3.2)	EN 301 511 V9.02 EN 301 908-1 V5.2.1 EN 301 908-2 V5.2.1

WARNING!

To comply with FCC RF exposure requirements, a separation distance of 20cm (7.87") or more must be maintained between the antenna of this product and all persons.

Separate FCC approval for this product is not required as it will be classed as a fixed installation.

THIS PRODUCT IS NOT DESIGNED TO BE USED AS AN EMERGENCY CALL POINT.

MANUFACTURER

VIDEX ELECTRONICS S.P.A.
Via del Lavoro, 1 - 63846 Monte Gilberto (FM) Italy
Tel: (+39) 0734-631699 - Fax: (+39) 0734-632475
www.videx.it - info@videx.it

CUSTOMER SUPPORT

All Countries:
VIDEX ELECTRONICS S.P.A.
www.videx.it - technical@videx.it
Tel: +39 0734-631699 - Fax: +39 0734-632475

UK Customers:
VIDEX SECURITY LTD.
www.videxuk.com - tech@videxuk.com
Tech Line: 0191 224 3174 - Fax: 0191 224 1559

The product is CE marked demonstrating its conformity and is for distribution within all member states of the EU with no restrictions. This product follows the provisions of the European Directives 2014/30/EU (EMC); 2014/35/EU (LVD); 2011/65/EU (RoHS): CE marking 93/68/EEC.

Contents

Introduction 4
System Components and Available Versions 6
Art. 4810 Technical Information 12
Art. 4903 Technical Information 14
Art. 4850R Technical Information 18
Wiring Diagrams 21
Auxiliary Inputs/Outputs 23
USB & RS485 Connection to a PC 27
RS485 Network Connection 28
General Directions for Installation 31
Fitting the SIM & Connecting Power 34
Reset Procedure 35
4000 Series Back Box Installation 36
Programming the GSM Intercom 38
The GSM Mobile App 63
System Operation 64
User Commands 68
Additional User Information 69
User Management 72
Troubleshooting 74
General Information 76
Notes 78

Introduction

MANUAL INTRODUCTION

The information in this manual is intended as an installation and commissioning guide for the 4000 series GSM PRO audio intercom system. This manual should be read carefully before the installation commences. Any damage caused to the equipment due to faulty installation where the information in this manual has not been followed is not the responsibility of Videx Security Ltd.

It is recommended that the GSM audio intercom is installed by a competent electrician, security or communications engineer.

For UK customers Videx run free training courses for engineers who are unfamiliar or who have not installed this system before. Technical help is also available for UK customers on tel: 0191 224 3174 during office hours (8:30am - 5:00pm MON to FRI) or via e-mail: ***tech@videxuk.com*** and for all overseas customers on tel: +39 0734 631669 or via e-mail: ***technical@videx.it***.

A copy of this Technical Manual can also be downloaded from the Videx websites: For UK customers ***www.videxuk.com*** and for overseas customers ***www.videx.it.***

SYSTEM INTRODUCTION

The system is designed to work on the same technology as mobile phones. It enables a call to be made from an entry point (door, gate etc), to any telephone number (mobile or land line). Up to 50 call buttons can be connected to the door panel, each able to call four telephone numbers (if the first is busy or not answered, the call can be diverted to up to three different numbers). The standard GSM PRO intercom works on a 2G network. A 3G variant is also available (suffix **/3G** to the part number e.g. **Art.4810-0/3G**, **Art.4810-1/3G** etc.). Features of the system include:

- A dry contact relay output and push to exit input;
- Two open collector auxiliary outputs and two auxiliary inputs;
- Integrated Proximity Access Control (up to 1000 proximity fobs or cards can be stored, these fobs/cards when presented to the nameplate window on the GSM PRO intercom or directly in front of the **Art.4850R** expansion reader will activate the door/gate relay);
- Call progress speech annunciation and call progress LED indication;
- Dial to Open facility (this feature enables up to 1000 stored numbers to dial the GSM PRO intercom, the intercom panel will not answer these calls, but will activate the door/gate relay without being charged for the call);
- Programmable call button timeband facility (a single timeband only);
- Programmable access control timeband facility (up to 10 timebands);
- Programmable free access timeband facility (up to 10 timebands);
- Up to 10 programmable access levels;
- Micro USB connection for ease of programming using the GSMSK PC software (version 4.0.0.0 or later);
- RS485 bus terminals for connecting additional 'slave' devices including coded keypads (**Art.4903**) and additional proximity readers (**Art.4850R**), up to a maximum of 8 devices, also used for ease of programming using the GSMSK PC software;
- Integrated bootloader function for updating intercom panel firmware via the GSMSK PC software;
- Event logging system that can record up to 4000 events which can be downloaded via the GSMSK PC software;
- Remote event logging facility (unlimited events) which can be monitored in real time (also refer to additional notes on page 72 under **user management**).

Programming of the telephone numbers (primary no, divert no's and dial to open no's) and the additional features including programming key fobs for the integrated proximity reader and additional proximity readers, programming access codes for additional coded keypads, timebands, access levels etc. can be carried out via text messaging (refer to notes **programming the GSM intercom** on pages 38 - 62) or using the GSMSK PC software (refer to the manual **GSMSK_66251720_EN_V2-0** or later). Limited programming features can also be programmed via the GSM mobile app, the **Videx SMS Wizard** (refer to notes **the GSM mobile app** on page 63).

SIM CARD SELECTION

A SIM card is required for this product but not supplied by Videx. The GSM PRO intercom can only accept a standard size SIM card (refer to the following SIM card size chart), both a micro-SIM and nano-SIM are not suitable. It is recommended to choose the SIM card which has the best coverage for the area in which the intercom panel will be installed. Both contract and 'Pay as you go' SIM cards can be used, however if using a 'Pay as you go' we would recommend setting up an automatic top up to avoid running short on credit and losing the use of the intercom panel. Alternatively if you already have a contract mobile phone it should be possible to get a second SIM card and telephone number on the existing account. For more information contact the SIM card provider or visit their website, as **this service is not provided by Videx**.

Introduction

Standard SIM		Micro-SIM		Nano-SIM	
☑	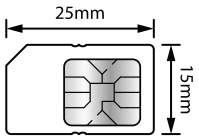	☒	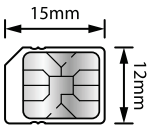	☒	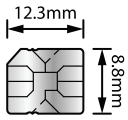

NETWORK PROVIDER SELECTION

It is imperative that for the reliable operation of the system that the best network provider for the area is selected. Problems such as network disconnection can occur if the provider has signal or interference problems for that area. We would recommend using a GSM signal strength meter to survey the intended antenna location. Contact Videx for more information on where to purchase a tester.

For UK customers, as an initial check we also recommend visiting the ofcom website ***www.ofcom.org.uk*** and follow the onsite links to their online mobile coverage tool *(**ofcom broadband and mobile checker app**)*. This tool will advise on the best coverage for the main network providers and other general queries that you may have about the service provider. For all overseas customers we suggest consulting the website of the network provider that will be used to check the coverage in your area.

The antenna should always be mounted vertically at the highest point possible. Metal structures and sources of interference such as power cables, control panels etc. can affect signals and so the antenna should be mounted away from these.

When registering a new SIM you may be asked for the IMEI number. This is the unique serial number of the GSM intercom. This number is located internally on the main hardware chip inside the GSM PRO module. To obtain the IMEI number from the GSM module refer to the programming notes **obtain the GSM's IMEI number** on page 62.

PRECAUTIONARY ADVICE

- When mounting the GSM antenna, choose a location which is away from human interaction and away from the intercom panel. Route the GSM antenna cable from the intercom panel so that it is separate from the power supply cables and microphone wire.
- Always ensure the power is switched OFF to the intercom panel before inserting or removing the SIM card.
- New SIM cards will need registering with the network service provider before they can be used. Full details of how this is done can normally be found in the SIM card pack. It will normally require that the SIM card is inserted into a mobile phone, a number dialled and instructions followed. While the SIM is in the mobile phone it would be a good time to disable any PIN codes, call diverts, ring back and disable features such as voicemail and text alerts. Details of how to do this can be found on the SIM card provider's website or by calling their customer services. Recommended SIM card providers are: Vodafone, T-Mobile, O2 or Orange/EE. **The 3 network can only be used on our 3G devices (Art.4810-0/3G, Art.4810-1/3G etc.), also refer to page 6.**
- To be able to receive text messages from the intercom panel, the SIM card will require an SMS service centre number. This is normally pre-installed on new SIM cards but if you are having trouble receiving SMS messages you will need to confirm this by inserting the SIM card into a mobile phone and using the phones menu options to check it. If a number is not programmed then it should be programmed while in the phone (the number can be obtained from the network service provider).
- Voicemail and text alerts must be switched OFF on the SIM card when using the dial in to release the door/gate feature. For Vodafone and O2 this can be done while the SIM card is in the intercom panel. For Orange/EE, T-Mobile and other providers the SIM card must be removed from the intercom panel, inserted into a mobile phone and the mobile phone menu instructions followed. This procedure may vary from provider to provider of different countires, we suggest contacting your provider for information.
- When storing the intercom panel's telephone number in your own mobile phone avoid using an obvious name such as 'Front Door', or 'My Gate' as this would make it easy to decipher if your phone was lost or stolen.
- The PIN request feature must be disabled on the SIM card before using it in the Intercom panel. It is likely on a new SIM card that it will not be enabled but if it is, it will prevent the system from working at all.
- This product may not be suitable for installation in hospitals, health care facilities or in the presence of flammable gases or liquids. Seek advice and authorisation before installing this product in these locations. **This product is not designed to be used as an emergency call point.**

*Network provider and services configuration codes mentioned in this manual are specific for the UK. For overseas customers please contact the network provider of your country for the corresponding codes, however Videx offers **no guarantee** that any additional codes will work.*

IMPORTANT NOTE ABOUT THE SIM

When using a pay monthly SIM card you can ask the service provider to put a spend limit (credit limit) on the account (Vodafone call this service 'spend checker'). This is to safeguard against possible problems which could result in a large phone bill at the end of the month. Most network providers offer this service. You will need to either ring or e-mail them to set this up. Automatic top ups should also have a monthly limit. We would suggest a limit of £50.00 which should be more than enough. **This service is not provided by Videx.**

System Components and Available Versions

DESCRIPTION

A system comprises of an intercom panel, power supply, SIM card (SIM card not provided by Videx) and antenna. The intercom panel is part of the Videx 4000 series modular design allowing it to be customised to the installation requirements for example including coded access, proximity access or including the correct number of call buttons (up to 50 call buttons).

ART. 4810 GSM (PRO) INTERCOM AVAILABLE VERSIONS

The intercom panel can include any of the modules from the 4000 series range and uses the standard 4000 series surface and flush mounting frames. The GSM PRO module is however essential and includes all the GSM communication electronics, SIM card (supplied separately) and connections. The intercom module is available in a 0 button, 1 button, 2 button and 4 button configuration (with all onboard buttons internally wired), as shown in **Fig.1** along with their part numbers.

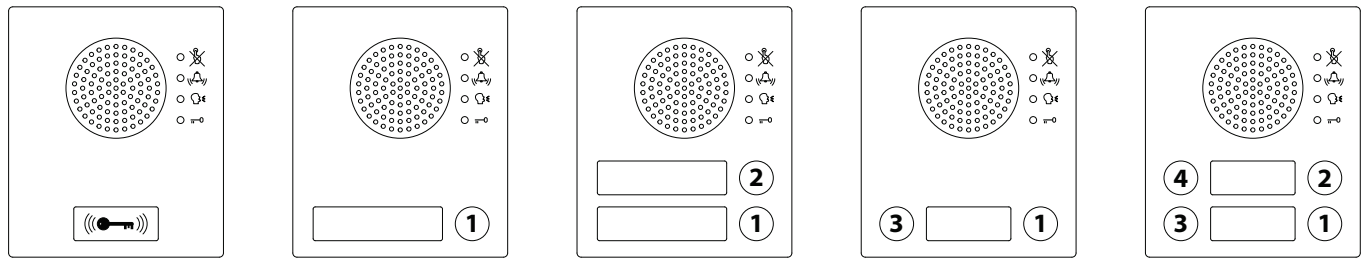

Art. 4810-0,
Art. 4810-0/3G

Art. 4810-1
Art. 4810-1/3G

Art. 4810-2
Art. 4810-2/3G

Art. 4810-1D
Art. 4810-1D/3G

Art. 4810-2D
Art. 4810-2D/3G

Fig. 1

EXTENSION BUTTON MODULES

The GSM intercom module will accept up to 50 call buttons. Any of the standard 4000 series button modules can be used as shown in **Fig.2** along with their part numbers. Please note that button 1 is in the bottom right corner of the module counting up.

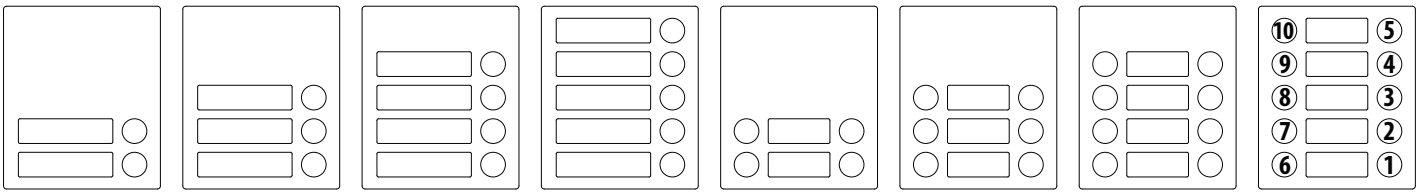

Art. 4842 Art. 4843 Art. 4844 Art. 4845 Art. 4842D Art. 4843D Art. 4844D Art. 4845D

Fig. 2

Button connections to the GSM module are shown in **Fig.4** on page 7 (only the wiring of the button matrix is shown). It is important to take care when using additional button modules with a GSM intercom module which also has onboard buttons. For example, an intercom module with one button means the extension button module used must start wiring from button 2, an intercom module with 2 buttons means the extension button module used must start wiring from button 3 and so on.

<u>IMPORTANT NOTE:</u> When extension button modules are being used on systems where proximity access is required and the Art.4810-0 GSM PRO module is used, the location of the onboard proximity reader is on the front of the main GSM PRO module below the speaker, as shown in Fig.3.

Standard versions of the GSM PRO (e.g. Art.4810-0 etc.) works on a 2G network. A 3G variant is also available (see Fig.1 above) that works on a 3G network, suffix /3G to the part no. (e.g. Art.4810-1/3G etc.).

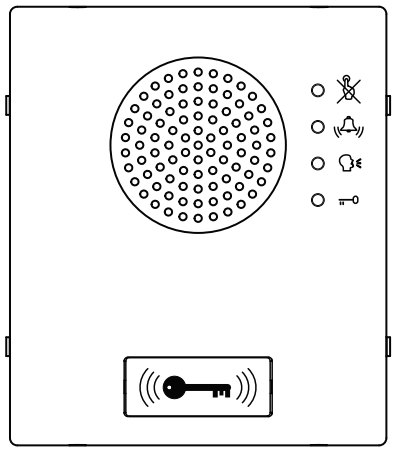

Art. 4810-0, Art.4810-0/3G

Fig. 3

BUTTON MATRIX WIRING

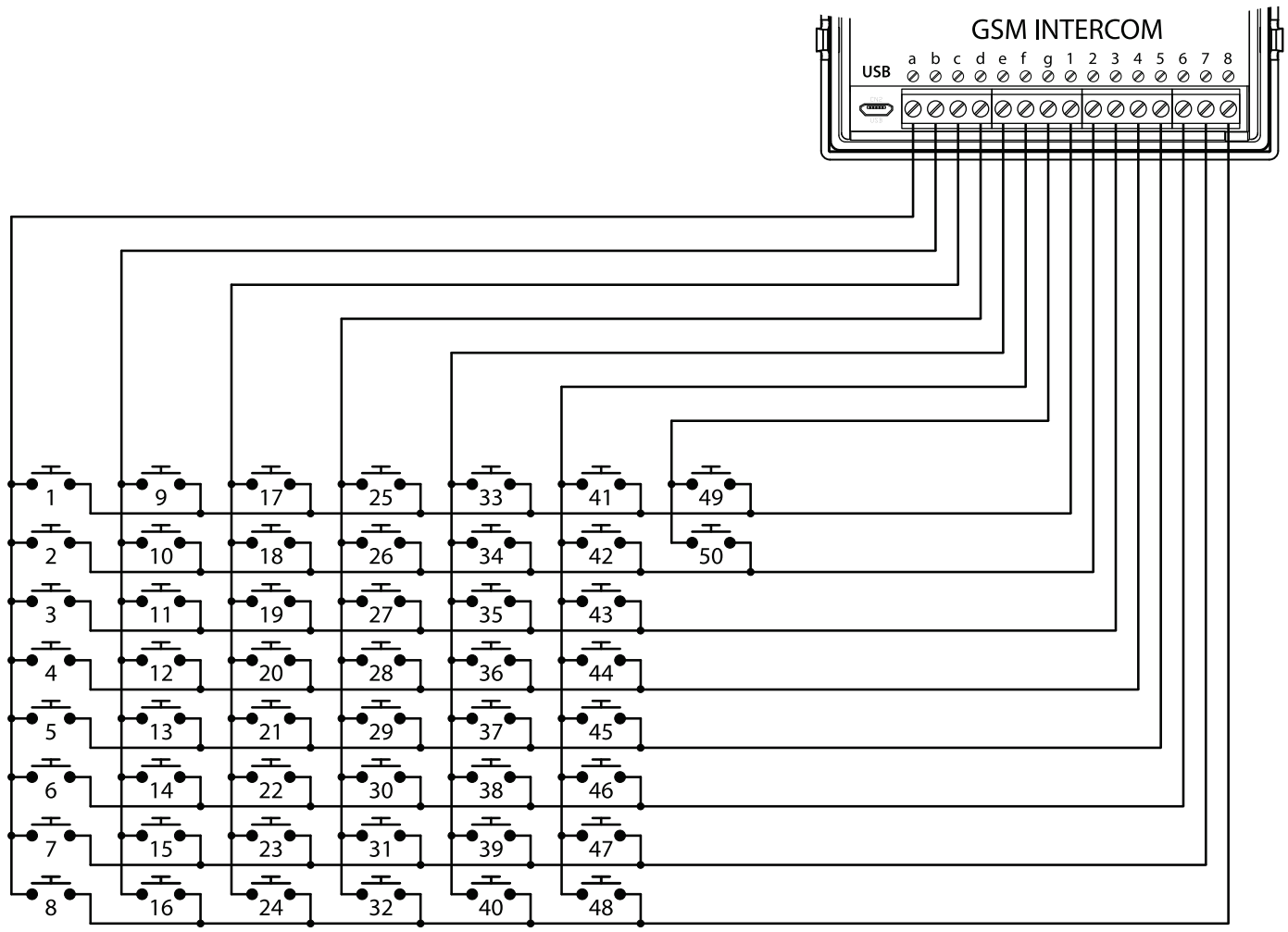

Fig. 4

BUTTON MODULE NOTES

If the GSM module has 1 button (Art.4810-1), the additional button module buttons should be wired starting from button number 2 (i.e. the first button of the button module should be connected between **a** & **2**, the next between **a** & **3** etc.).

If the GSM module has 2 buttons (Art.4810-2), the additional button module buttons should be wired starting from button number 3 (i.e. the first button of the button module should be connected between **a** & **3**, the next between **a** & **4** etc.).

If the GSM module has 4 buttons (Art.4810-2D), the additional button module buttons should be wired starting from button number 5 (i.e. the first button of the button module should be connected between **a** & **5**, the next between **a** & **6** etc.).

4000 SERIES BACK BOXES AND MOUNTING FRAMES

Both surface and flush back boxes and mounting frames are available. The size of the frame will depend on the number of modules that make up the GSM4K/GSM4KCR kit. The last digit of the frame code indicates the number of modules it will take. Frames are available in gun metal gray finish. The 4000 series mounting frames available are shown in **Fig.5** (flush) and **Fig.6** (surface) with the following tables showing the back box dimensions including the part numbers and dimensions for optional flush and surface 4000 series rainshields.

System Components and Available Versions

Flush Back Boxes and Mounting Frames

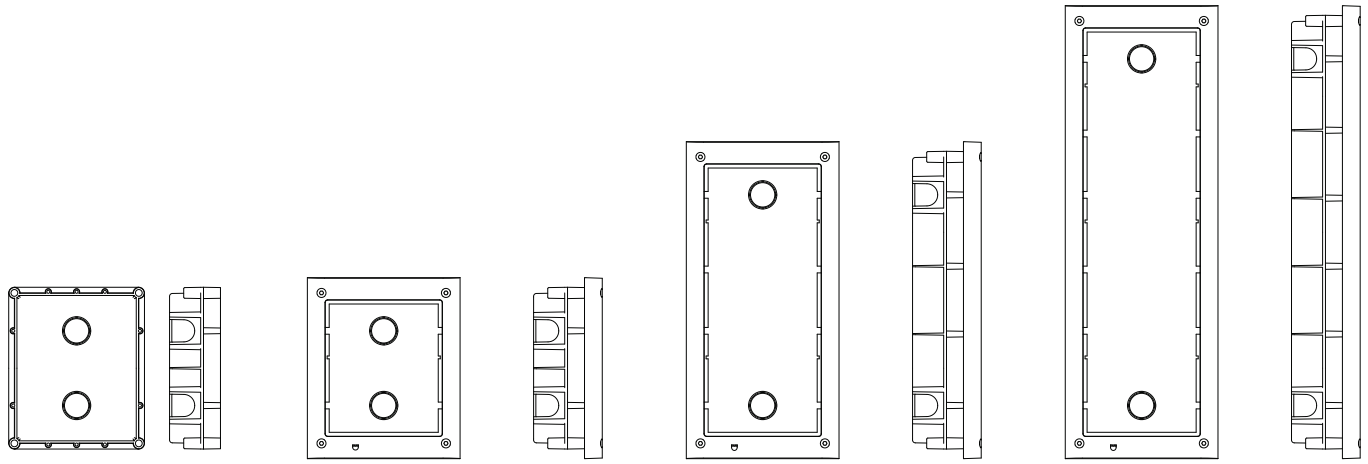

Art. 4851 Art. 4852 Art. 4853

Fig. 5

Flush Back Box Dimensions (inc. optional flush rainshields)

Part No.	Housed Modules	Front Frame *(W x H x D)* mm	Back Box *(W x H x D)* mm
Art.4851	1	135 x 160 x 15.7	120 x 143 x 46
Art.4852	2	135 x 280.2 x 15.7	120 x 263.2 x 46
Art.4853	3	135 x 400.4 x 15.7	120 x 383.4 x 46
Part No.	**Module Size**	**Rainshield Dimensions *(W x H x D)* mm**	
Art.4871	1	140 x 163 x 35	
Art.4872	2	140 x 283 x 35	
Art.4873	3	140 x 403 x 35	

Surface Back Boxes and Mounting Frames

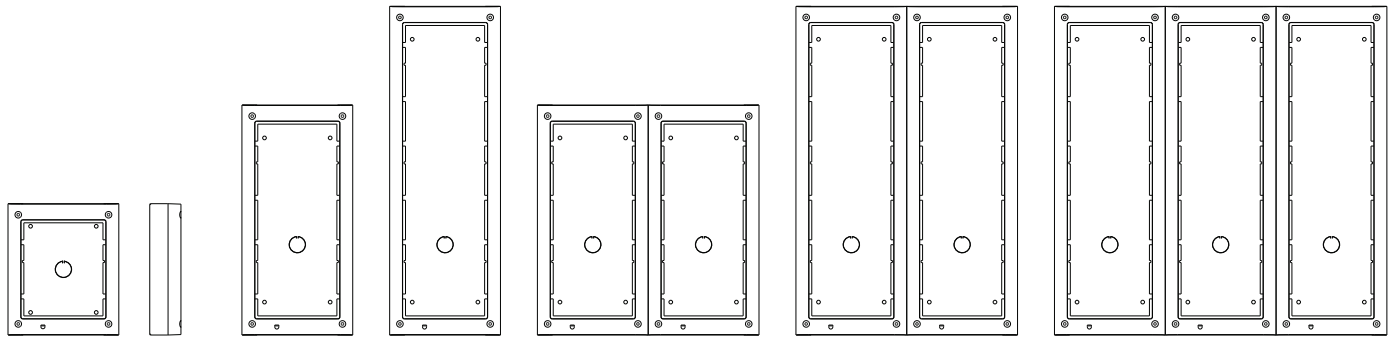

Art. 4881 Art. 4882 Art. 4883 Art. 4884 Art. 4886 Art. 4889

Fig. 6

Surface Back Box Dimensions (inc. optional surface rainshields)

Part No.	Housed Modules	No. of Columns	Back Box *(W x H x D)* mm
Art.4881	1	1	135 x 160 x 43
Art.4882	2	1	135 x 280.2 x 43
Art.4883	3	1	135 x 400.4 x 43
Art.4884	4	2	270 x 280.2 x 43
Art.4886	6	2	270 x 400.4 x 43
Art.4889	9	3	405 x 400.4 x 43
Part No.	**Module Size**	**Rainshield Dimensions *(W x H x D)* mm**	
Art.4891	1	140 x 163 x 62	
Art.4892	2	140 x 283 x 62	
Art.4893	3	140 x 403 x 62	

System Components and Available Versions

12VDC 2A POWER SUPPLY (HDR-15-12)

The Art. 4810 GSM PRO intercom is designed to work with power supplies in the range of 12Vdc and should be capable of supplying a constant current of no less than 1A. Both the GSM4K and GSM4KCR kits are supplied with a slim line HDR-15-12, 12Vdc 1.25A power supply (refer to **Fig.7**).

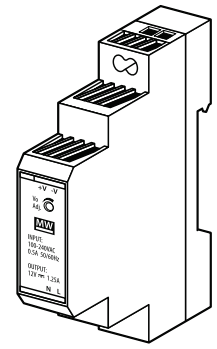

Fig. 7

ART. 432 GSM ANTENNA

The Art.432 GSM antenna connects to the SMA female bulkhead connection on the rear of the Art.4810 GSM PRO module. A GSM antenna with an SMA male connector should be used (refer to **Fig.8**).

Antenna Parts

1. GSM antenna with magnetic base.
2. Self-threading screw *(Ø3.5mm x 9.5mm)*.
3. Aluminium L bracket for mounting.
4. SMA male connector *(cable length 2.5m)*.
5. Expansion type wall plugs *(Ø6mm)*.
6. Self-threading screw *(Ø4mm x 30mm)*.
7. Right angled SMA adapter.

<u>IMPORTANT NOTE:</u> An antenna must always be fitted for the GSM module to work. Always route the GSM antenna cable away from the microphone wires and the power supply wires to avoid interference on the speech channels.

In instances where there is a tight fitting space for the SMA male connector on the antenna cable the right angled SMA adapter (7) can be used to help reroute the cable down the back side of the GSM module.

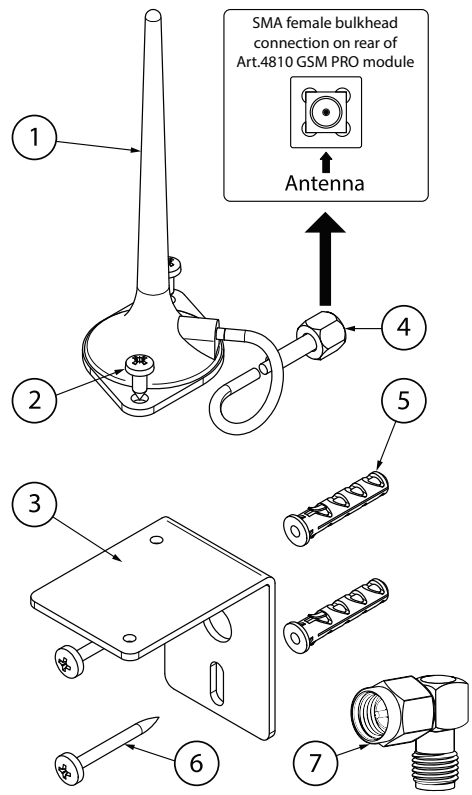

Fig. 8

ART. 4903 CODELOCK

The Art.4903 codelock module (included as part of the GSM4KCR kits), see **Fig.9**, can be powered from 12-24V AC or DC and includes 2 dry contact relay outputs and two switched 0V push to exit inputs which can be used to trigger relay 1 & 2. It also includes an RS485 bus connection which can be linked to the Art.4810 GSM module and networked with other Art.4903 codelocks and/or Art.4850R proximity devices (up to 8 devices in total).

When connected to the GSM PRO via RS485 it can operate up to 400 permanent access codes (000-399) which can be assigned to trigger relay 1 or 2 or both. The permanent codes can also have access levels and timebands assigned to them. It can also operate up to 32 temporary codes. These codes can be between 4 - 8 digits long and are stored on the GSM PRO intercom. An additional two codes (1 per relay) can be programmed directly via the keypad and are stored in the codelock and not the GSM PRO module.

The relay time can be 01 - 99 seconds or set for latching (00). When in latching mode, enter the code followed by 'ENTER' ⇦ to latch and to unlatch the relay.

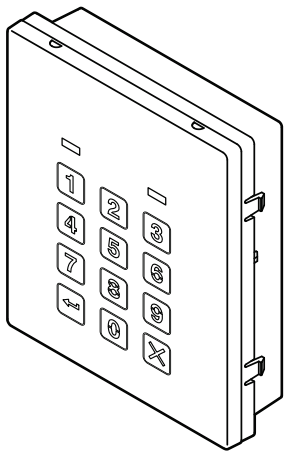

Fig. 9

System Components and Available Versions

GSM INTERCOM AUDIO KITS

ONE WAY VERSIONS	**GSM4K-1 - flush mounting**		
	1 Outdoor station composed of: 1 Art. 4810-1: 1 button GSM (pro) unit 1 Art. 4851: Flush mounting box	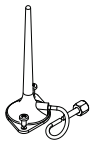 **1 GSM antenna** Art. 432	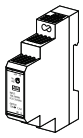 **1 Power supply** HDR-15-12 12Vdc 1.25A
	GSM4K-1S - surface mounting		
	1 Outdoor station composed of: 1 Art. 4810-1: 1 button GSM (pro) unit 1 Art. 4881: Surface mounting box	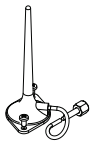 **1 GSM antenna** Art. 432	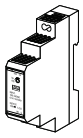 **1 Power supply** HDR-15-12 12Vdc 1.25A
TWO WAY VERSIONS	**GSM4K-2 - flush mounting**		
	1 Outdoor station composed of: 1 Art. 4810-2: 2 button GSM (pro) unit 1 Art. 4851: Flush mounting box	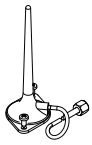 **1 GSM antenna** Art. 432	**1 Power supply** HDR-15-12 12Vdc 1.25A
	GSM4K-2S - surface mounting		
	1 Outdoor station composed of: 1 Art. 4810-2: 2 button GSM (pro) unit 1 Art. 4881: Surface mounting box	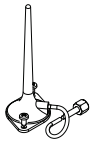 **1 GSM antenna** Art. 432	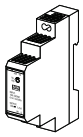 **1 Power supply** HDR-15-12 12Vdc 1.25A

ONE WAY VERSIONS	**GSM4KCR-1 - flush mounting**		
	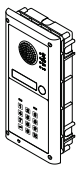 **1 Outdoor station** composed of: 1 Art. 4810-1: 1 button GSM (pro) unit 1 Art. 4903: 4000 series codelock 1 Art. 4852: Flush mounting box	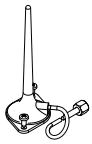 **1 GSM antenna** Art. 432	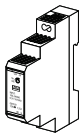 **1 Power supply** HDR-15-12 12Vdc 1.25A
	GSM4KCR-1S - surface mounting		
	1 Outdoor station composed of: 1 Art. 4810-1: 1 button GSM (pro) unit 1 Art. 4903: 4000 series codelock 1 Art. 4882: Surface mounting box	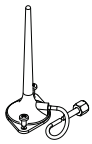 **1 GSM antenna** Art. 432	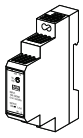 **1 Power supply** HDR-15-12 12Vdc 1.25A
TWO WAY VERSIONS	**GSM4KCR-2 - flush mounting**		
	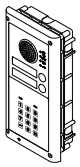 **1 Outdoor station** composed of: 1 Art. 4810-2: 2 button GSM (pro) unit 1 Art. 4903: 4000 series codelock 1 Art. 4852: Flush mounting box	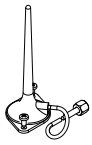 **1 GSM antenna** Art. 432	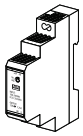 **1 Power supply** HDR-15-12 12Vdc 1.25A
	GSM4KCR-2S - surface mounting		
	1 Outdoor station composed of: 1 Art. 4810-2: 2 button GSM (pro) unit 1 Art. 4903: 4000 series codelock 1 Art. 4882: Surface mounting box	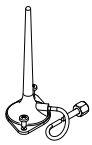 **1 GSM antenna** Art. 432	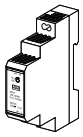 **1 Power supply** HDR-15-12 12Vdc 1.25A

System Components and Available Versions

GSM4K AUDIO KITS

Additional GSM4K-n (flush) kit versions are available from 3 way kits up to 12 way kits: **GSM4K-3** up to **GSM4K-12**. Each audio kit comes with the appropriate Art.4810 GSM module, appropriate extension button module(s) and appropriate flush back box depending on the GSM4K-n kit required (where n = the number of call buttons), refer to table below.

Additional GSM4K-nS (surface) kit versions are available from 3 way kits up to 12 way kits: **GSM4K-3S** to **GSM4K-12S**. Each audio kit comes with the appropriate Art.4810 GSM module, appropriate extension button module(s) and appropriate surface back box depending on the GSM4K-nS kit required (where n = the number of call buttons), refer to table below.

	Kit No.	Outdoor station composed of:
FLUSH	GSM4K-3	1 Art.4810-0; 1 Art.4843; 1 Art.4852
	GSM4K-4	1 Art.4810-0; 1 Art.4844; 1 Art.4852
	GSM4K-5	1 Art.4810-0; 1 Art.4845; 1 Art.4852
	GSM4K-6	1 Art.4810-1; 1 Art.4845; 1 Art.4852
	GSM4K-7	1 Art.4810-2; 1 Art.4845; 1 Art.4852
	GSM4K-8	1 Art.4810-0; 1 Art.4843; 1 Art.4845; 1 Art.4853
	GSM4K-9	1 Art.4810-0; 1 Art.4844; 1 Art.4845; 1 Art.4853
	GSM4K-10	1 Art.4810-0; 2 Art.4845; 1 Art.4853
	GSM4K-11	1 Art.4810-1; 2 Art.4845; 1 Art.4853
	GSM4K-12	1 Art.4810-2; 2 Art.4845; 1 Art.4853

	Kit No.	Outdoor station composed of:
SURFACE	GSM4K-3S	1 Art.4810-0; 1 Art.4843; 1 Art.4882
	GSM4K-4S	1 Art.4810-0; 1 Art.4844; 1 Art.4882
	GSM4K-5S	1 Art.4810-0; 1 Art.4845; 1 Art.4882
	GSM4K-6S	1 Art.4810-1; 1 Art.4845; 1 Art.4882
	GSM4K-7S	1 Art.4810-2; 1 Art.4845; 1 Art.4882
	GSM4K-8S	1 Art.4810-0; 1 Art.4843; 1 Art.4845; 1 Art.4883
	GSM4K-9S	1 Art.4810-0; 1 Art.4844; 1 Art.4845; 1 Art.4883
	GSM4K-10S	1 Art.4810-0; 2 Art.4845; 1 Art.4883
	GSM4K-11S	1 Art.4810-1; 2 Art.4845; 1 Art.4883
	GSM4K-12S	1 Art.4810-2; 2 Art.4845; 1 Art.4883

GSM4KCR AUDIO KITS

Additional GSM4KCR-n (flush) kit versions are available from 3 way kits up to 12 way kits: **GSM4KCR-3** up to **GSM4KCR-12**. Each audio kit comes with the appropriate Art.4810 GSM module, appropriate extension button module(s), Art.4903 codelock module and appropriate flush back box depending on the GSM4KCR-n kit required (where n = the number of call buttons), refer to table below.

Additional GSM4KCR-nS (surface) kit versions are available from 3 way kits up to 12 way kits: **GSM4KCR-3S** to **GSM4KCR-12S**. Each audio kit comes with the appropriate Art.4810 GSM module, appropriate extension button module(s), Art.4903 codelock module and appropriate surface back box depending on the GSM4KCR-nS kit required (where n = the number of call buttons), refer to table below.

	Kit No.	Outdoor station composed of:
FLUSH	GSM4KCR-3	1 Art.4810-0; 1 Art.4843; 1 Art.4903; 1 Art.4853
	GSM4KCR-4	1 Art.4810-0; 1 Art.4844; 1 Art.4903; 1 Art.4853
	GSM4KCR-5	1 Art.4810-0; 1 Art.4845; 1 Art.4903; 1 Art.4853
	GSM4KCR-6	1 Art.4810-1; 1 Art.4845; 1 Art.4903; 1 Art.4853
	GSM4KCR-7	1 Art.4810-2; 1 Art.4845; 1 Art.4903; 1 Art.4853
	GSM4KCR-8	1 Art.4810-0; 1 Art.4843; 1 Art.4845; 1 Art.4903; 2 Art.4852
	GSM4KCR-9	1 Art.4810-0; 1 Art.4844; 1 Art.4845; 1 Art.4903; 2 Art.4852
	GSM4KCR-10	1 Art.4810-0; 2 Art.4845; 1 Art.4903; 2 Art.4852
	GSM4KCR-11	1 Art.4810-1; 2 Art.4845; 1 Art.4903; 2 Art.4852
	GSM4KCR-12	1 Art.4810-2; 2 Art.4845; 1 Art.4903; 2 Art.4852

	Kit No.	Outdoor station composed of:
SURFACE	GSM4KCR-3S	1 Art.4810-0; 1 Art.4843; 1 Art.4903; 1 Art.4883
	GSM4KCR-4S	1 Art.4810-0; 1 Art.4844; 1 Art.4903; 1 Art.4883
	GSM4KCR-5S	1 Art.4810-0; 1 Art.4845; 1 Art.4903; 1 Art.4883
	GSM4KCR-6S	1 Art.4810-1; 1 Art.4845; 1 Art.4903; 1 Art.4883
	GSM4KCR-7S	1 Art.4810-2; 1 Art.4845; 1 Art.4903; 1 Art.4883
	GSM4KCR-8S	1 Art.4810-0; 1 Art.4843; 1 Art.4845; 1 Art.4903; 1 Art.4884
	GSM4KCR-9S	1 Art.4810-0; 1 Art.4844; 1 Art.4845; 1 Art.4903; 1 Art.4884
	GSM4KCR-10S	1 Art.4810-0; 2 Art.4845; 1 Art.4903; 1 Art.4884
	GSM4KCR-11S	1 Art.4810-1; 2 Art.4845; 1 Art.4903; 1 Art.4884
	GSM4KCR-12S	1 Art.4810-2; 2 Art.4845; 1 Art.4903; 1 Art.4884

IMPORTANT NOTE: The GSM audio kits listed above work on a 2G network. For the 3G variant remember to suffix the kit part no. with /3G, e.g. GSM4K-4/3G, GSM4KCR-6S/3G etc.

All GSM audio kits are supplied with a HDR-15-12 12Vdc, 1.25A slim line power supply and Art.432 antenna.

Art. 4810 Technical Information

ART. 4810 GSM (PRO) MODULE

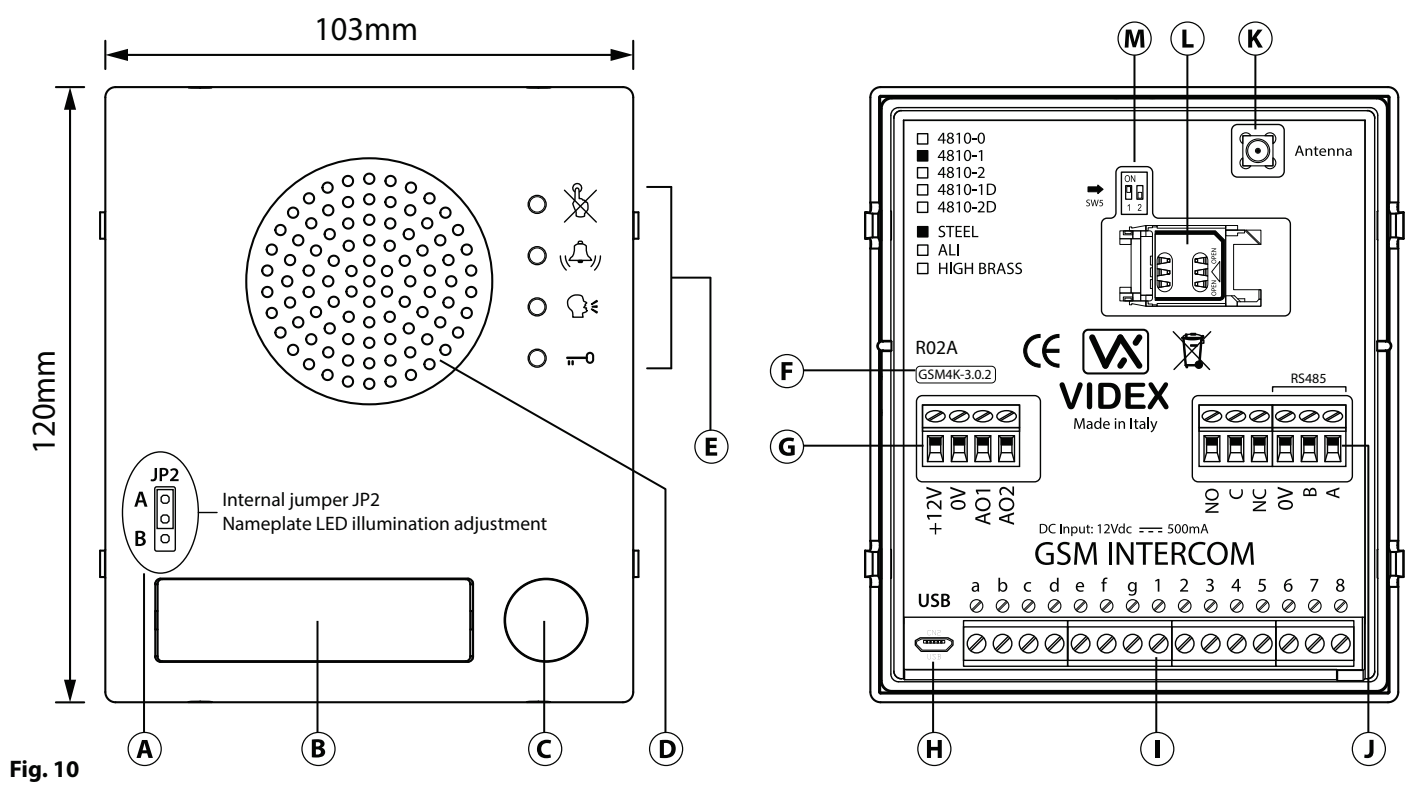

Fig. 10

SPEAKER VOLUME ADJUSTMENT (DIP-SWITCH SETTINGS)

There are 2 dip-switches located on the back of the GSM module next to the antenna connection, see **Fig.10**. They can be used to adjust the volume from the door intercom speaker (see table below). Additionally, the volume can also be adjusted during a call electronically via the telephone keypad (refer to user command table on page 68).

Dip-Switch	Dip-Switch Status		Gain (dB)
	Dip No.1	Dip No.2	
	ON	ON	6
	ON	OFF	12
	OFF	ON	18
	OFF	OFF	23.5

LEGEND

- (A) Internal nameplate LED jumper (**JP2**)
- (B) Nameplate and proximity access reader
- (C) Call button
- (D) Intercom speaker
- (E) Call progress LED's
- (F) Current firmware version (**GSM4K X.X.X**)
- (G) Power input and auxiliary terminals
- (H) Micro USB connection
- (I) Button matrix terminals
- (J) Relay output and RS485 bus terminals
- (K) Antenna connection
- (L) SIM card holder
- (M) Speaker volume dip-switches

NAMEPLATE ILLUMINATION JUMPER JP2

The nameplate LED illumination jumper JP2 is located behind the GSM module's front facia, as shown in **Fig.10**. To access the jumper the facia must be removed and the jumper can be adjust as required. When JP2 is set in position A (upper 2 pins) the LED is set for bright illumination, when JP2 is set in position B (lower 2 pins) the LED is set for low illumination and if JP2 is completely removed this will disable the nameplate LED's.

TERMINAL CONNECTIONS

Terminal	Description
+12V	12 - 24Vdc or ac power.
0V	0V ground power.
AO1	Auxiliary output 1 (open collector, 150mA max.).
AO2	Auxiliary output 2 (open collector, 150mA max.).

Art. 4810 Technical Information

terminals continued...

NO	Normally open relay contact.	Relay contacts: 3A@24Vdc 3A@120Vac
C	Common relay contact.	
NC	Normally closed relay contact.	
0V	RS485 bus terminals for permanent connection to a PC, also used to network with Art.4903 codelock and Art.4850R proximity reader (up to 8 devices max.).	
B		
A		
a - g	Button matrix for connecting up to 50 call buttons, PTE, and auxiliary inputs. The PTE (push to exit button) connects across g-6. Auxiliary 1 input connects across g-5 (activates AO1 when set to mode 01). Auxiliary 2 input connects across g-4 (sends SMS message to master telephone number).	
1 - 8		
JP2	Nameplate window LED illumination adjustment. JP2 position A = LED bright, JP2 position B = LED low, JP2 removed = LED disabled.	

CALL PROGRESS LED'S

LED (sign)	Description
	The busy LED when illuminated, indicates that it is not possible to make a call because a call or a conversation is in progress. The LED will be OFF when the system is in standby. If there is power on the GSM intercom and the Art.432 antenna is not connected this LED will flash continuously until the antenna is connected. The LED will flash while connecting to a network.
	The call LED when illuminated, indicates that the call from the GSM intercom panel is in progress. The LED will switch OFF when the call is answered or after the call time expires.
	The speak LED when illuminated, indicates that it is possible to speak because the call has been answered. The LED will switch OFF at the end of a conversation when the telephone/mobile that has been dialled hangs up or at the end of the call time.
	The open LED when illuminated, indicates that the door lock (GSM relay) has been operated. It will switch OFF at the end of the programmed "door opening" time. The LED will also illuminate and operate the relay if a programmed key fob is presented to the onboard proximity reader (nameplate window).

TECHNICAL SPECIFICATION

Working Voltage:	12 - 24Vdc or ac +/- 10%
Standby Current:	approx. 60mA
Max. Current:	approx. 500mA (max.)
Call Buttons:	up to 50 (max.)
Telephone Numbers per Button:	4 telephone numbers (1 primary, 3 diverts)
Dial to Open Numbers:	up to 1000 (max.)
Proximity Access (fobs/cards):	up to 1000 users (max.)
Coded Access:	up to 400 permanent codes and 32 temporary codes (when used with Art.4903 via RS485 bus)
Call Progress LED's:	4 (busy, call, speak and open)
Programming Method:	SMS messaging or PC software
RS485 Bus Connection:	A, B and 0V
Push to Exit Input:	1 (push-to-make across terminals g-6)
Auxiliary Inputs:	2 (AO1 = across terminals g-5, AO2 = across terminals g-4)
Auxiliary Outputs:	2 (open collector output, switched 0V, 150mA max.)
Dry Contact Relay:	C, NO and NC, 3A @ 24Vdc, 3A @ 120Vac
Event Logging:	up to 4000 events (unlimited when using remote logging facility)
USB Port:	micro USB
Timebands:	1 call button timeband; 10 access control and 10 free access timebands
Working Temperature:	-10 +50°C

Art. 4903 Technical Information

ART. 4903 CODELOCK MODULE

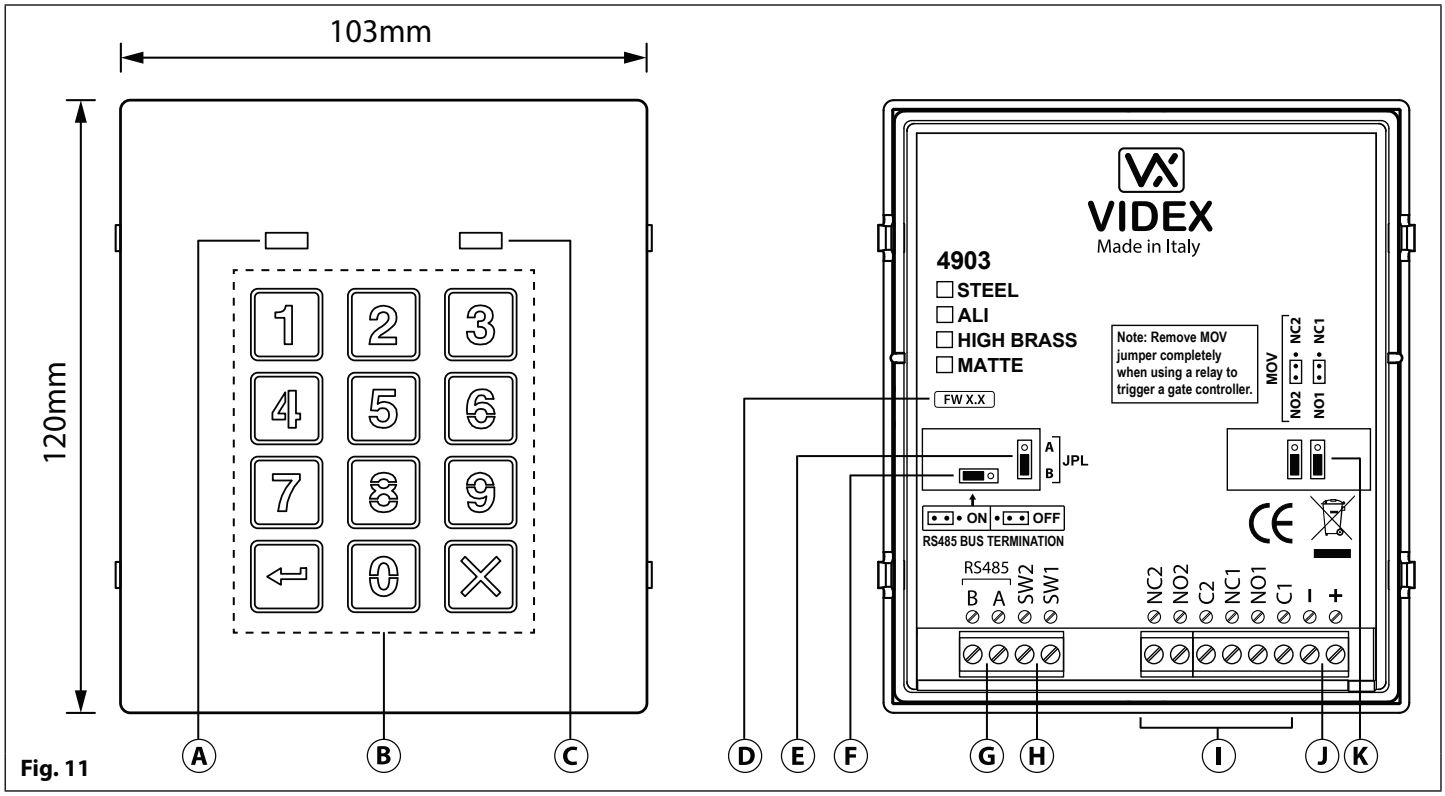

Fig. 11

DESCRIPTION

The module features 12 stainless steel buttons, backlit in blue (keys **0 - 9**, **ENTER** ⏎ and **CLEAR** ✕), 2 LED's (green LED = data, red LED = status indication) for progress information during use and programming and a stainless steel or aluminium front plate, see **Fig.11**. With two integral relays (**RLY1** and **RLY2**) each with common (**C**), normally open (**NO**) and normally closed (**NC**) connections and two switched 0V push to exit inputs **SW1** and **SW2** to enable the external triggering of the relays. Key presses are signalled acoustically while each button press has a tactile feel. Entering the correct code followed by **ENTER** ⏎ will activate the relevant relay.

LEGEND

- (A) Data LED (green)
- (B) Backlit (blue) key buttons
- (C) Status indication LED (red)
- (D) Current firmware version (**FW X.X**)
- (E) Back light adjustment jumper (**JPL**)
- (F) RS485 bus termination jumper (**JP1**)
- (G) RS485 bus terminals
- (H) PTE terminals (**SW1** and **SW2**)
- (I) Relay terminals (**RLY1** and **RLY2**)
- (J) Power input terminals
- (K) Back EMF protection (**JP2** and **JP3**)

RS485 BUS TERMINATION JUMPER (JP1)

The jumper **JP1** on the rear of the keypad sets the RS485 bus termination when connected to the Art.4810 GSM PRO or other RS485 devices. By default the jumper is set to the **ON** position (across to the left). When more than one RS485 device is connected to the keypad in line on the RS485 bus terminals then the jumper can be set to the **OFF** position (across to the right) and only set to the **ON** (closed) position on the end of line device, see **Fig.12**.

Fig. 12

RELAY BUILT-IN BACK EMF PROTECTION (JP2 AND JP3)

The Art.4903 includes selectable back EMF protection (metal oxide varistors) jumpers **JP2** and **JP3** for each relay (marked MOV) and are used to select the protection type. When using a fail secure lock with connections C & NO the jumper should be in the NO position. When using a fail open (safe) lock with connections C & NC the jumper should be in the NC position, as shown in **Fig.13**. When using the codelock to trigger a gate controller or another third party controller the jumper should be removed completely (this disables the protection on the relay).

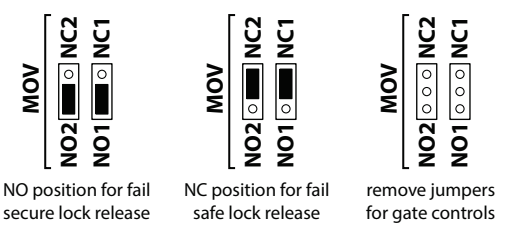

Fig. 13

BACK LIGHT ADJUSTMENT JUMPER (JPL)

The jumper JPL (**Fig.11**, (E)) is used to adjust the brightness and determine the operation of the backlit buttons. There are four brightness settings for the backlit buttons and two programming modes (mode 1 and 2) for the jumper.

The two modes that can be programmed change the functionality of the jumper JPL. The table below indicates the programming mode, the position of the jumper and the operation of the backlit buttons.

	Jumper Position		Back light Operation
Mode 1	A	A / B	Back light OFF in standby. Full brightness when any buttons are pressed.
Mode 1	B (default)	A / B	Back light on low brightness in standby. Full brightness when any buttons are pressed.
Mode 2	A or B	A / B or A / B	Back light on full brightness all of the time.
	JPL removed in either Mode	A / B	No back light, the back light is completely disabled.

PROGRAMMING MODE 1 (DEFAULT MODE, JPL = B)

Follow the steps below to set the codelock to mode 1:

1. Disconnect the power from the Art.4903 codelock;
2. Short out terminals - and **SW2**, see **Fig.14**, page 16;
3. Press and hold down button **1** [1] and keep it pressed down while the power is switched back ON;
4. When power is restored to the codelock wait for the module to emit a single beep and the red status LED (**Fig.11**, (C)) to flash once;
5. Listen for the confirmation tone and wait for the red status LED (**Fig.11**, (C)) to flash once again;
6. Release button **1** [1] and remove the short between terminals - and **SW2**, see **Fig.15**, page 16;
7. Set the jumper JPL to the desired position.

PROGRAMMING MODE 2

Follow the steps below to set the codelock to mode 2:

1. Disconnect the power from the Art.4903 codelock;
2. Short out terminals - and **SW2**, see **Fig.14**, page 16;
3. Press and hold down button **2** [2] and keep it pressed down while the power is switched back ON;
4. When power is restored to the codelock wait for the module to emit a double beep and the red status LED (**Fig.11**, (C)) to flash once;
5. Listen for the confirmation tone and wait for the red status LED (**Fig.11**, (C)) to flash once again;
6. Release button **2** [2] and remove the short between terminals - and **SW2**, see **Fig.15**, page 16;
7. Set the jumper JPL to the desired position.

BACK LIGHT AND BUTTON OPERATION

If the back light programming mode is set to mode 1 (with jumper JPL in either the A or B position) when a button is pressed on the keypad the back light will switch to full brightness for approximately 10 seconds.

After this time the back light will either switch OFF or switch back to low brightness (depending on the jumper position) unless another button has been pressed within the 10 second period in which case the back light will stay on full brightness for a further 10 seconds.

The exception to this is if the back light programming mode is set to mode 2, i.e. the back light will be on full brightness all of the time or if the jumper is removed the back light will be disabled.

SETTING UP THE UNIT ID OF THE KEYPAD (ID 1 - 8)

1. First disconnect the power from the Art.4903 keypad, then short out terminals - and **SW2** (**Fig.14**, page 16);
2. Press and hold down the **0** [0] button, keeping it pressed while the power is switched back ON;
3. When power is restored to the keypad the backlit key buttons will illuminate (**Fig.11**, (B)). Wait for the keypad to emit a low level tone then wait for the red status LED (**Fig.11**, (C)) to switch ON;
4. Release the **0** [0] button then enter the unit ID required for the Art.4903 (1 - 8) using the keypad (**Fig.11**, (B)). The red status LED will switch OFF and the keypad will play a short melody. Observe the red status LED (**Fig.11**, (C)) as this will flash as many times as the unit ID being set (e.g. if the unit ID is set to ID.8 the red status LED will flash 8 times);
5. After the red status LED stops flashing remove the short between terminals - and **SW2** (**Fig.15**, page 16) the unit ID has been set.

PROGRAMMING AS A STANDALONE KEYPAD

When using the Art.4903 as a standalone keypad the programming is the same as the programming of an Art.4800M keypad (refer to programming guide and flowchart below). All programming is carried out using the keypad. The programming menu is protected by an **ENGINEER'S CODE**, the factory default of which is six times 1 (**"111111"**). This code can be changed to any 4 to 8 digit **ENGINEER'S CODE** during the programming and is used to gain entry to the programming menu only.

Each relay (**RLY1** and **RLY2**) can be programmed with a 4 - 8 digit access code (one code per relay) and will activate the respective relay for the programmed relay time (01 - 99 seconds or 00 for latching). The access code programmed is stored in the keypads internal memory.

PROGRAMMING GUIDE

- Enter the **ENGINEER'S CODE**: first time type six times **1** (**111111** factory default) and press **ENTER** ⏎ to confirm, (the red LED will illuminate);
- Confirm **ENGINEER'S CODE**: re-type the same code again **or** type a new code (4 to 8 digits) then press **ENTER** ⏎ to confirm, (melody);
- Enter the code (4 to 8 digits) to enable **RELAY 1** then press **ENTER** ⏎ to confirm, (melody);
- Enter the **RELAY 1** operation time (2 digits 01 to 99, i.e. 05 = 5 seconds, 00 = latch) then press **ENTER** ⏎ to confirm, (melody);
- Enter the code (4 to 8 digits) to enable **RELAY 2** then press **ENTER** ⏎ to confirm, (melody);
- Enter the **RELAY 2** operation time (2 digits 01 to 99, i.e. 05 = 5 seconds, 00 = latch) then press **ENTER** ⏎ to confirm, (melody);
- Press **ENTER** ⏎ twice again to exit programming (melody);
- The system is ready to use (the red LED will switch OFF).

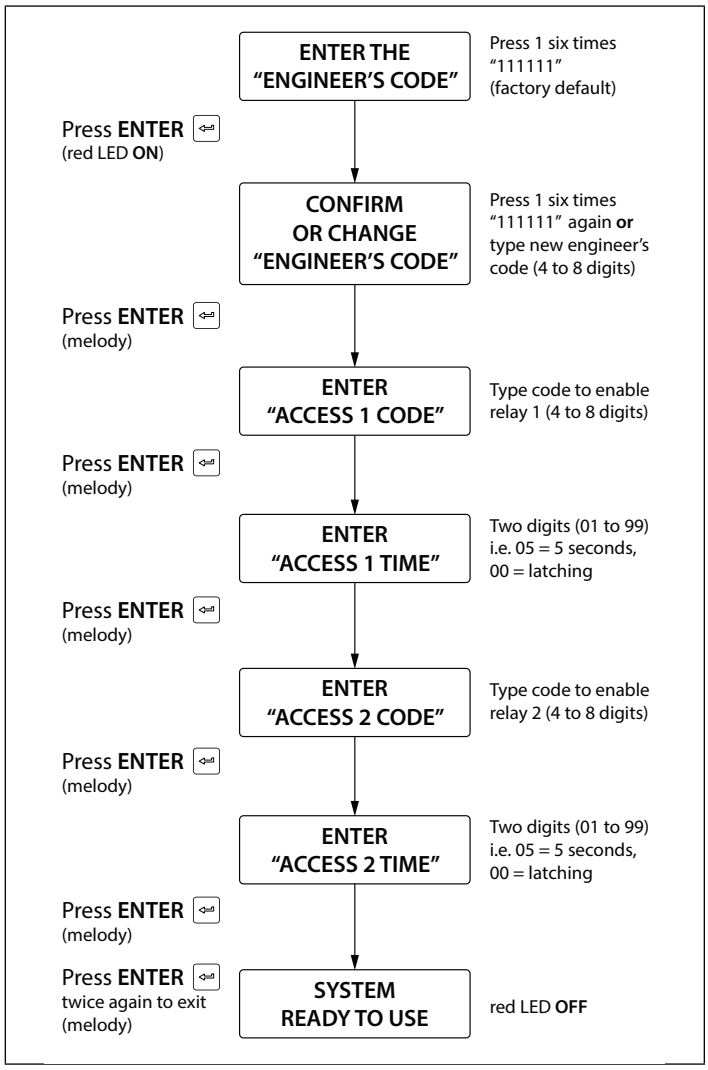

PROGRAMMING NOTES

- Pressing the **ENTER** ⏎ button twice during the programming process, without changing any parameters, will exit from the programming menu.
- When entering a relay code it must be different from the **ENGINEER'S CODE**.
- To latch the relay type in the access code then press **ENTER** ⏎ to confirm. To unlatch the relay type in the same access code again then press **ENTER** ⏎ to confirm.

RESETTING THE CODELOCK BACK TO FACTORY DEFAULTS

Follow the steps below to reset the codelock to factory defaults:

1. Remove/disconnect the power from the Art.4903 codelock;
2. Short out terminals **-** and **SW2**, see **Fig.14**;
3. Press and hold down the **ENTER** ⏎ button and keep pressed down while the power is switched back ON;
4. When power is restored to the codelock wait for the module to emit a beep and wait for the red status LED (**Fig.11**, Ⓒ) to stop flashing;
5. Release the **ENTER** ⏎ button then remove the short between terminals **-** and **SW2**, see **Fig.15**;
6. The **ENGINEER'S CODE** has been reset back to the factory default, 6x1 (**"111111"**), relays reset to 5 seconds and internal access codes for **RLY1** and **RLY2** cleared.

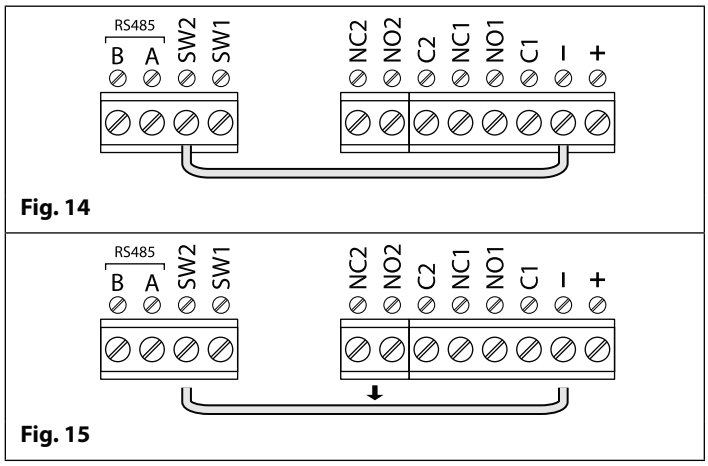

PROGRAMMING WHEN INTEGRATED WITH THE GSM PRO (ART.4810) MODULE VIA THE RS485 BUS CONNECTIONS

The Art.4903 can also be programmed using the GSMSK PC software (refer to the manual: **GSMSK_66251720_EN_V2-0** or later) and also via text messaging (refer to notes **programming the GSM intercom** on pages 38 - 62). When wired directly to the GSM PRO module using the RS485 bus connections, see **Fig.16**, additional access code features of the GSM PRO module become available which include:

- program up to 400 permanent access codes (000 - 399);
- assign any of the 400 access codes to an access level (0 - 9) and relay;
- program up to 32 temporary access codes;
- allocate any of the 32 temporary codes to a specific time period (between 1 - 255 hours) after which time the code will be deleted;
- assign any of the codes, whether permanent or temporary, to trigger any or a combination of the two relays (**RLY1** and/or **RLY2**).

Also refer to notes **RS485 network connection** on pages 28 - 30.

The access codes can be 4 - 8 digits in length and are stored in the GSM PRO module's memory and not the keypad.

Even when the Art.4903 is connected to the GSM PRO with the RS485 bus connection any access codes programmed directly using the keypad, following the programming flowchart on page 16, for relays 1 and 2 (as if the keypad were programmed as a standalone keypad) will still operate the respective relay.

The RS485 connection also allows the keypad to be networked with other Art.4903 keypads and Art.4850R proximity readers where each module requires a unit ID to be setup, see **setting up the unit ID of the keypad** notes on page 15, up to a total of 8 devices can be networked.

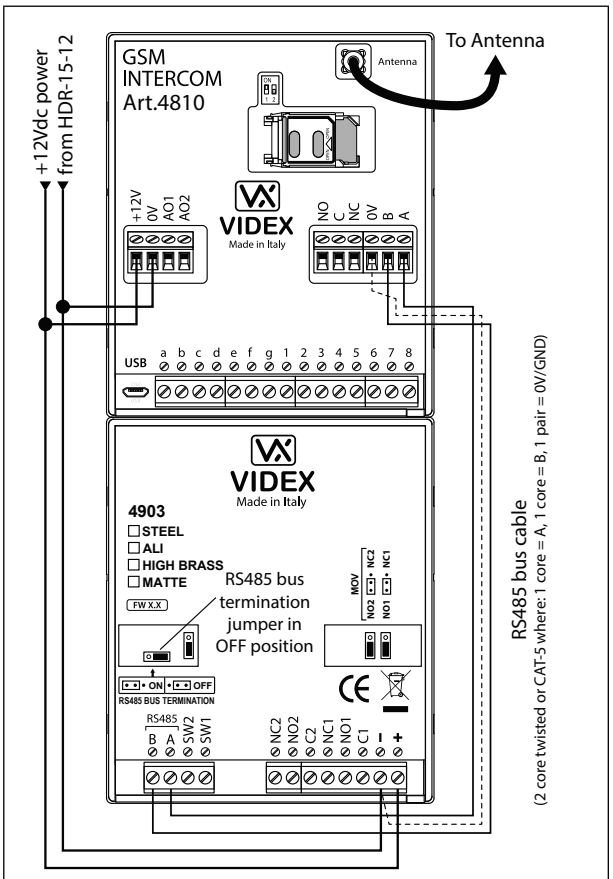

Fig. 16

RS485 BUS CONNECTION AND WHEN TO FIT A 120Ω RESISTOR

Please note that for the RS485 bus cable over a short distance, as shown in **Fig.16**, the bus termination jumper (**JP1**) on the keypad should be set to the **OFF** position and a 120Ω resistor is **not required** across terminals **A** / **B** on the Art.4810 GSM PRO module. The RS485 bus termination is **only required** when additional RS485 devices are connected on the RS485 bus over longer distances (refer to notes **RS485 network connection** on pages 28 - 30 for more information).

TERMINAL CONNECTIONS

Connection	Description	
+	12-24V AC or DC power input	
-	0V power input	
C1	Relay 1 common connection	Relay contacts: 3A @ 24Vac/dc (max.)
NO1	Relay 1 normally open connection	
NC1	Relay 1 normally closed connection	
C2	Relay 2 common connection	
NO2	Relay 2 normally open connection	
NC2	Relay 2 normally closed connection	
SW1	Switched 0V input to trigger relay 1	
SW2	Switched 0V input to trigger relay 2	
A	RS485 bus terminal connections	
B		

TECHNICAL SPECIFICATION

Working voltage:	12V - 24Vac/dc +/- 10%
Current consumption:	20mA (standby); 70mA (max.)
Number of relays:	2, **RLY1** and **RLY2** (**C**, **NC** and **NO**)
Relay current/voltage:	3A @ 24Vac/dc (max.)
Push to exit inputs:	2, **SW1** and **SW2** (switched 0V)
RS485 bus connections:	Yes, **A** and **B**
RS485 termination:	Jumper **JP1**
Back light adjustment:	Jumper **JPL**
Networkable:	Yes via RS485 (8 devices max.)
Back EMF protection:	2x MOV jumpers, **JP2** and **JP3**
Number of codes:	2 codes, 1 per relay (standalone); 400 permanent codes (via RS485); 32 temporary codes (via RS485)
Programming:	Via keypad (standalone); SMS text message (via RS485); GSMSK PC software (via RS485)
Working Temperature:	-10 +50°C

Art. 4850R Technical Information

ART. 4850R PROXIMITY READER MODULE

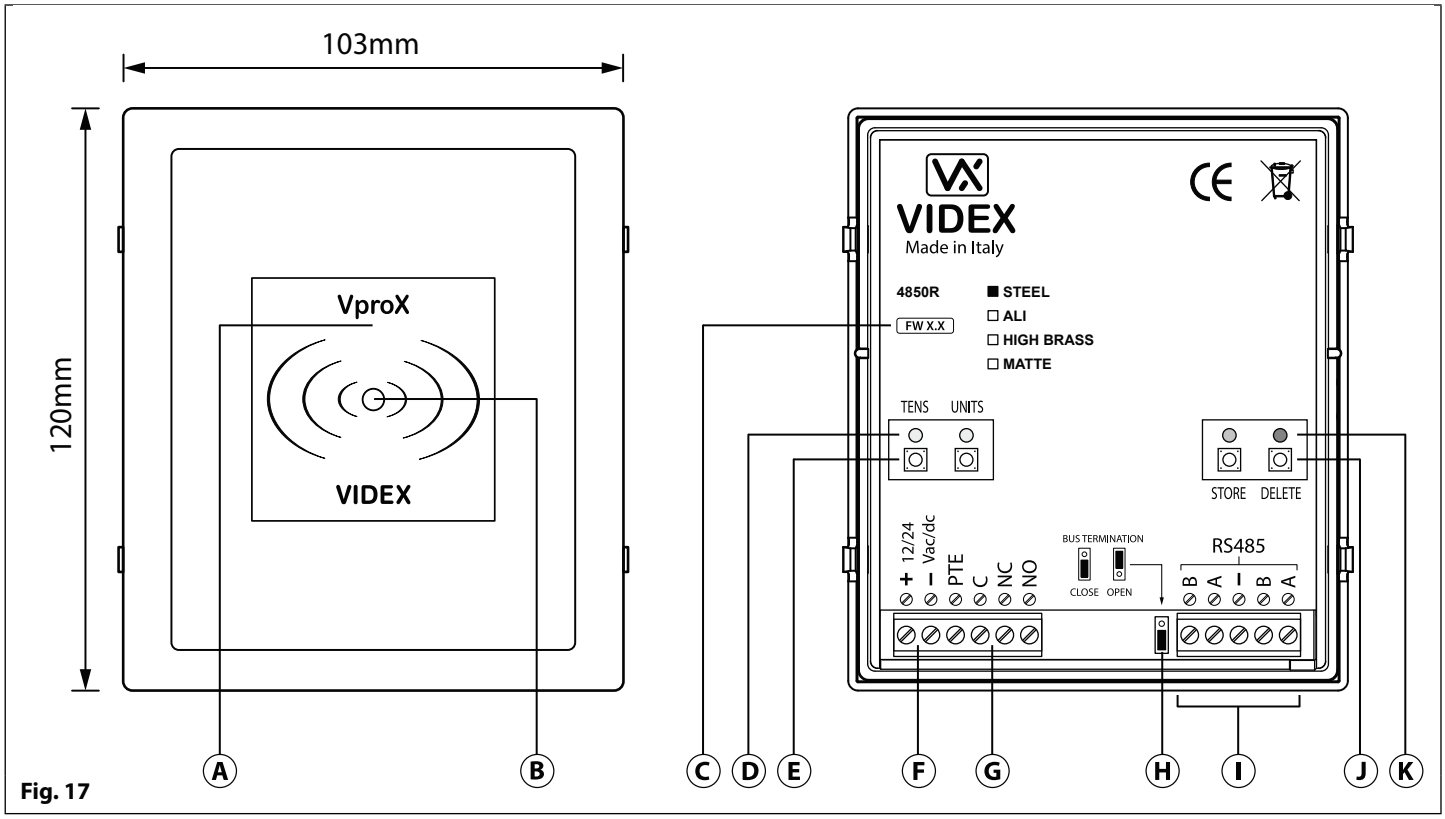

Fig. 17

DESCRIPTION

The Art.4850R proximity reader is an expansion reader that can be connected to the Art.4810 GSM PRO intercom via an RS485 bus connection. It allows the GSM intercom to have up to 7 additional proximity access doors or can be used with a combination of proximity and coded access using the Art.4903 keypad (up to a total of 8 devices with the GSM PRO's onboard reader as device ID.1).

The front of the module has a tri-colour LED to indicate to the user the status of the reader (amber = standby, green = access granted and red = access denied). The reader is housed in a 4000 series module with a stainless steel or aluminium surround front frame, see **Fig.17**.

When connected directly to the GSM PRO intercom module with the RS485 bus connection it can be programmed by either sending SMS text messages (refer to notes **programming the GSM intercom** on pages 38 - 62) or using the GSMSK PC software (refer to the manual: **GSMSK_66251720_EN_V2-0** or later).

LEGEND

- (A) Proximity reading area
- (B) Status indication LED
- (C) Current firmware version (**FW X.X**)
- (D) Programming indication LED's (yellow)
- (E) Tens and Units programming buttons
- (F) Power input terminals
- (G) PTE input & relay (**C**/**NC**/**NO**) terminals
- (H) RS485 bus termination jumper
- (I) RS485 bus terminals
- (J) Store and Delete programming buttons
- (K) Store LED (green) and Delete LED (red)

It has a single onboard relay with common (**C**), normally open (**NO**) and normally closed (**NC**) connections and a switched 0V push to exit input (**PTE)** to enable the activation of the relay. The relay operating time can be set for 01 - 99 seconds or 00 for latching and can be programmed by using a combination of the tens, units and store buttons on the back of the module (also refer to **programming the relay time** on page 19). Presenting a programmed fob will activate the relay for the programmed relay time.

The unit ID (1 - 8) can be set by using a combination of the units, store and delete buttons on the back of the module (also refer to **setting the unit ID** on page 19).

IMPORTANT NOTE: The Art.4850R reader can only be used as an expansion reader for the GSM PRO intercom, therefore programming can only be carried out (when connected by RS485) by sending SMS text messages to the GSM PRO or using the GSMSK PC software (software version 4.0.0.0 or later). The only manual programming that can be performed on the module is the unit ID setup and relay time. All proximity fob data is actually stored in the GSM module's memory and not the proximity reader.

Compatible key fobs: 955/T and/or PBX-1E ; compatible proximity cards: 955/C and/or PBX-2.

⚠ IMPORTANT NOTE: MIFARE PROXIMITY FOBS/CARDS CANNOT BE USED WITH THIS READER.

RS485 BUS TERMINATION JUMPER

The jumper on the rear of the proximity reader sets the RS485 bus termination when connected to the Art.4810 GSM PRO or other RS485 devices. By default the jumper is set to the closed position (lower two pins). When more than one RS485 device is connected to the reader in line on the RS485 bus terminals then the jumper can be set to the open position (upper two pins) and only set to the closed position on the end of line device, see **Fig.18**.

Fig. 18

PROGRAMMING THE RELAY TIME (00, 01 - 99)

In standby the green store LED and red delete LED on the back of the module will be **ON**, the yellow tens and units LED's will be **OFF**, see **Fig.19**. Follow the steps below to set the relay time:

1. Press and hold down the store button for approximately 6 seconds until the green store LED switches **OFF** and the red delete LED stays **ON**, see **Fig.20**;
2. Use the tens and units buttons to set the relay time, e.g. to set the relay time to 25 press the tens buttons twice and the units button 5 times (listen for the confirmation beep each time the button is pressed and observe the yellow tens/units LED's as they should flash each time that each button is pressed), see **Fig.21**;
3. Press the store button once to confirm the setting (again listen for the confirmation beep when the button is pressed and observe the green store LED as this should flash once);
4. Both the green store LED and red delete LED will switch back **ON** and put the reader back into standby;
5. The reader is ready to be programmed.

To set the relay time for latching press and hold down the store button (follow step 1 above). Once the red delete LED stays **ON** and the green store LED is **OFF**, press the store button once to confirm (follow step 3 above). The relay time will be set for 00 seconds.

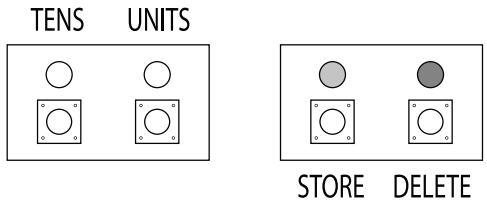

Fig. 19

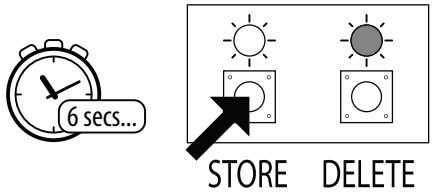

Fig. 20

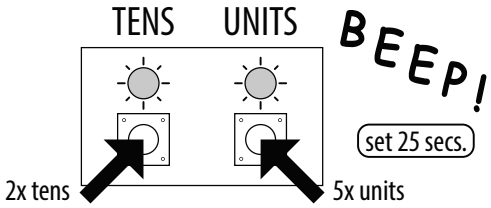

Fig. 21

SETTING THE UNIT ID (1 - 8)

In standby the green store LED and red delete LED on the back of the module will be **ON**, the yellow tens and units LED's will be **OFF**, see **Fig.19**. Follow the steps below to set the unit ID:

1. Press and hold down both the store and delete buttons for approximately 6 seconds until both the green and red LED's switch **OFF**, see **Fig.22**;
2. Use the units button to set the unit ID of the reader, e.g. to set the unit ID to 5 press the units button 5 times (listen for the confirmation beep each time the button is pressed and observe the yellow units LED as this should flash each time the button is pressed), see **Fig.23**;
3. Press the store button once to confirm the setting (again listen for the confirmation beep when the button is pressed and observe the green store LED as this should flash once);
4. Both the green store LED and red delete LED will switch back **ON** and put the reader back into standby;
5. The reader is ready to be programmed.

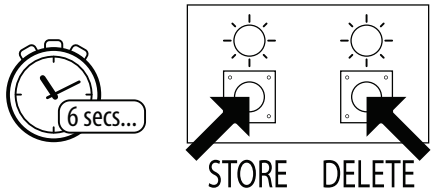

Fig. 22

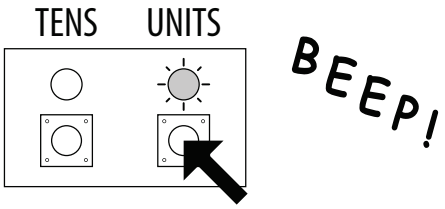

Fig. 23

Art. 4850R Technical Information

TERMINAL CONNECTIONS

Connection	Description	
+	12-24V AC or DC power input	
-	0V power input	
PTE	Switched 0V input to trigger relay	
C	Relay common connection	3A @ 24Vac/dc max.
NC	Relay normally closed connection	
NO	Relay normally open connection	
B	RS485 bus terminal connections	
A		
-	RS485 ground connection	
B	RS485 bus terminal connections	
A		

TECHNICAL SPECIFICATION

Working voltage:	12V - 24Vac/dc +/- 10%
Current (standbay):	150mA
Current (operation):	150mA (max.)
Number of relays:	1x, **C**, **NC** and **NO**
Relay current/voltage:	3A @ 24Vac/dc (max.)
Push to exit inputs:	1x, **PTE** (switched 0V)
RS485 bus connections:	2x **A**, 2x **B** and **-** (GND)
RS485 termination:	Yes, Jumper
Networkable:	via RS485 (up to 8 devices max.)
Programming:	Tens, units, store & delete buttons (for unit ID & relay time only); SMS text message (via RS485); GSMSK PC software (via RS485)
Working Temperature:	-10 +50ºC

Wiring Diagrams

GSM4K CONNECTIONS

Fig.24 shows the wiring connections for a **GSM4K-1**/**GSM4K-1S** audio kit.

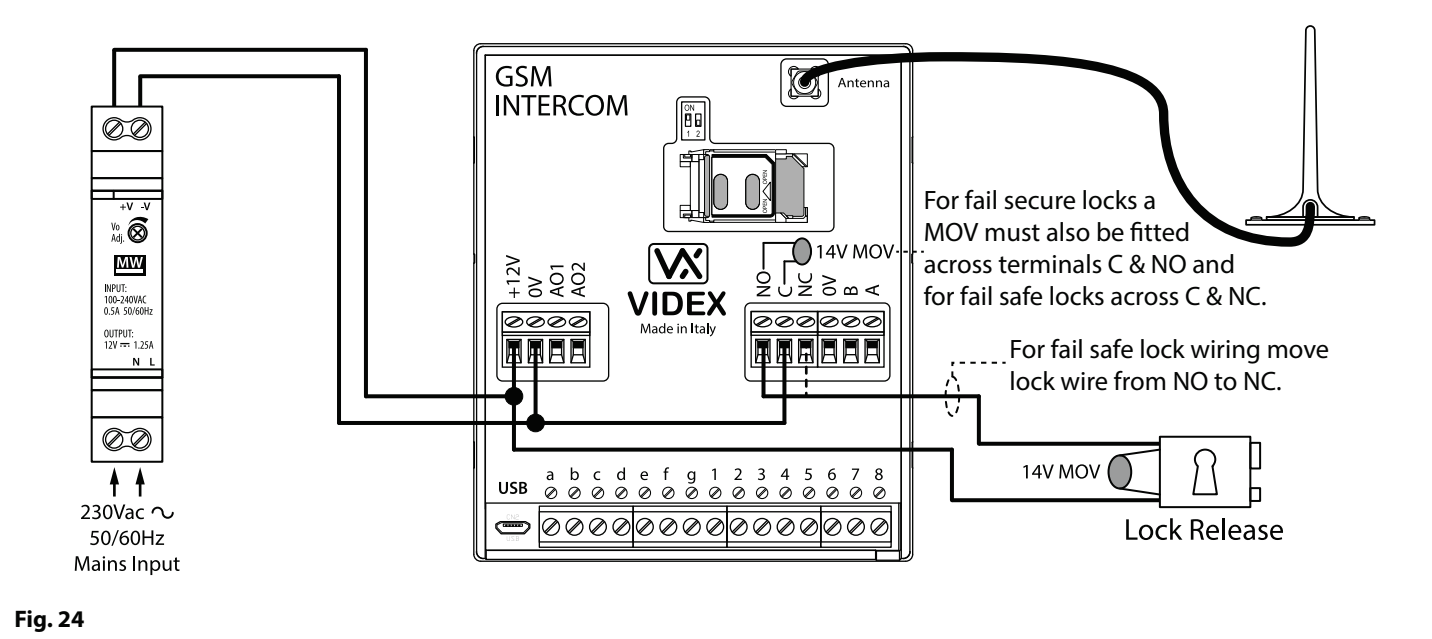

Fig. 24

GSM4KCR CONNECTIONS

Fig.25 shows the wiring connections for a **GSM4KCR-1**/**GSM4KCR-1S** audio kit when the Art.4903 is used as a standalone keypad. **Fig.26** shows connections for a **GSM4KCR-1**/**GSM4KCR-1S** audio kit when the additional access code features of the GSM PRO module are required when connecting it with the RS485 bus terminals to the Art.4903 keypad.

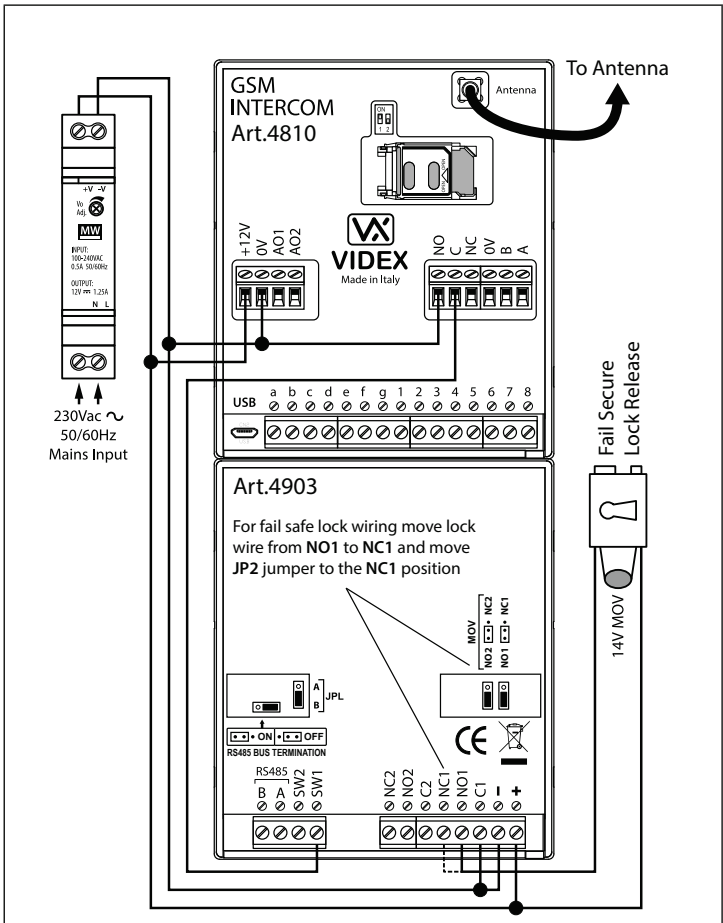

Fig. 25

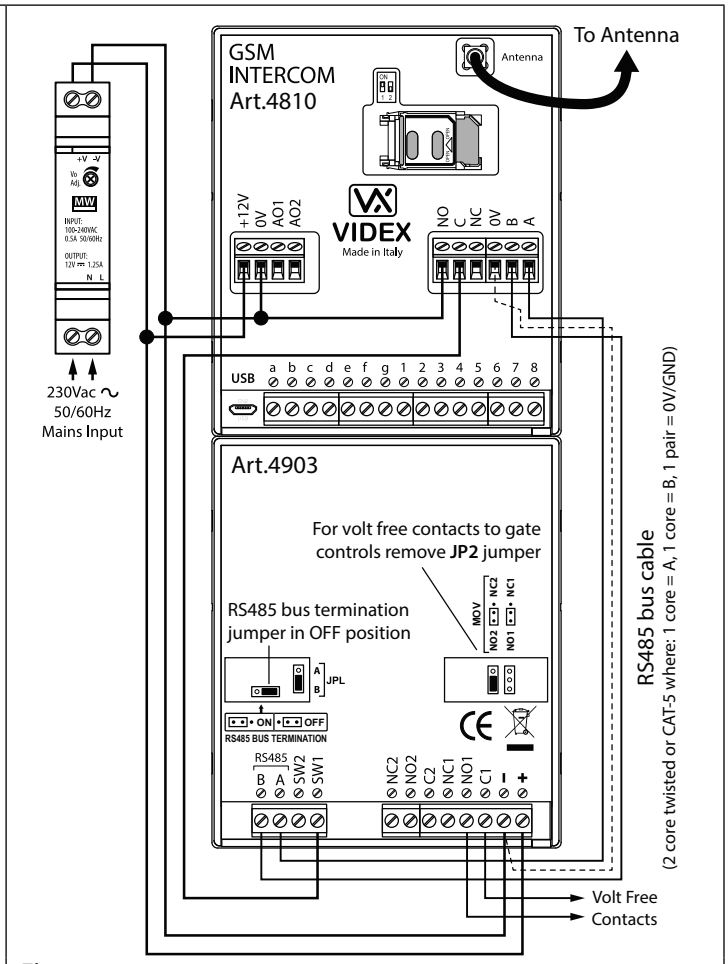

Fig. 26

Wiring Diagrams

CONNECTING TO A GATE CONTROLLER

For a **GSM4K** series audio kit if the Art.4810 GSM intercom is going to be connected to an electric gate then the wires from the gate controls can be connected directly into the C and NO relay terminals on the GSM module, as shown in **Fig.27**. For a **GSM4KCR** series audio kit if the gate controls are going to be connected directly to the Art.4903 keypad the relay terminals C1 and NO1 can be used (or C2/NO2 depending on the relay required), remembering to remove the respective back EMF protection jumper (JP2 or JP3), as shown in **Fig.28**.

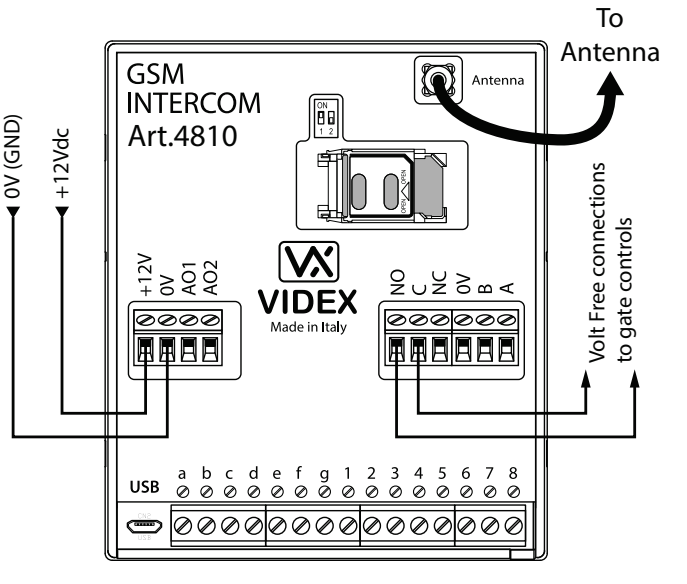

Fig. 27

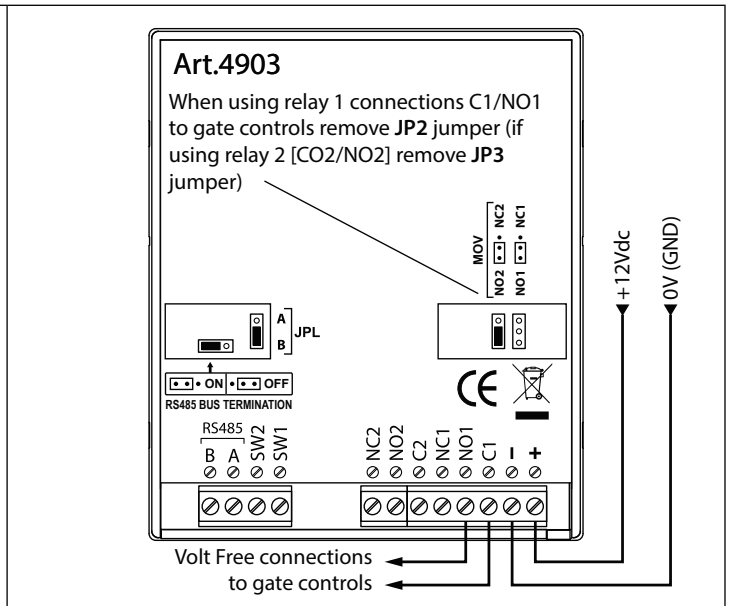

Fig. 28

CONNECTING A PUSH TO EXIT BUTTON AND A BREAK GLASS UNIT

The push to exit button must be configured as a "push-to-make" switch and connected across terminals g & 6 on the Art.4810 GSM PRO module. The break glass unit, configured as a "push-to-break", would only be used when connecting a fail safe/fail open lock release (e.g. a mag lock) and would connect in series with the GSM's relay connections C and NC, as shown in **Fig.29**.

When the exit button is pressed the GSM relay will trigger for the programmed relay time. When the break glass unit is activated it will break the power to the mag lock.

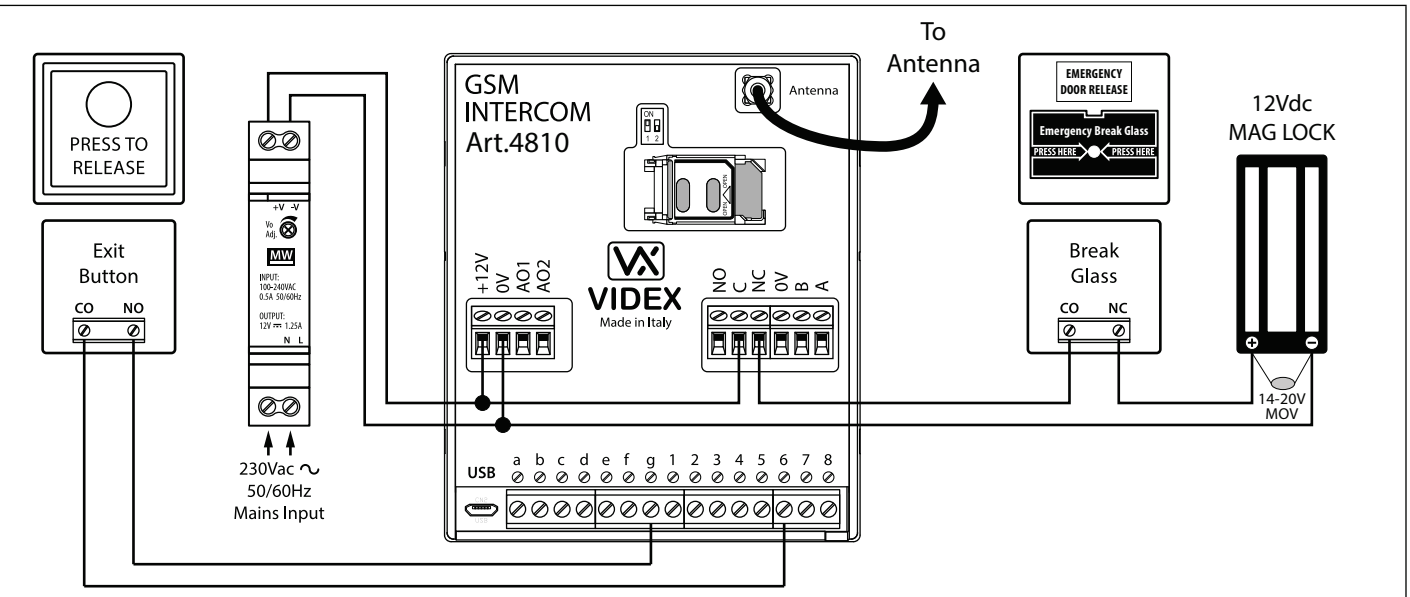

Fig. 29

<u>IMPORTANT NOTE:</u> In instances where the current draw of the lock (fail secure or fail safe) exceeds the current rating of the HDR15-12 (1.25A) power supply a separate power supply with a sufficient current rating will be required to power the lock.

Auxiliary Inputs/Outputs

AUXILIARY OUTPUT AO1

The auxiliary output AO1 has six modes 00 - 05 and is set using the **A1M** command (refer to page 44 for full list of **A1M** programming modes). It is an open collector output (switched low, 150mA max.) and depending on the mode it is set to will determine how the AO1 output behaves. The following examples show how the AO1 output can be connected.

AO1 SET TO MODE 00, 'CALL ACTIVATED'

When set to mode 00 auxiliary output AO1 will activate when the call begins and deactivate when the call ends, as shown in **Fig.30**.

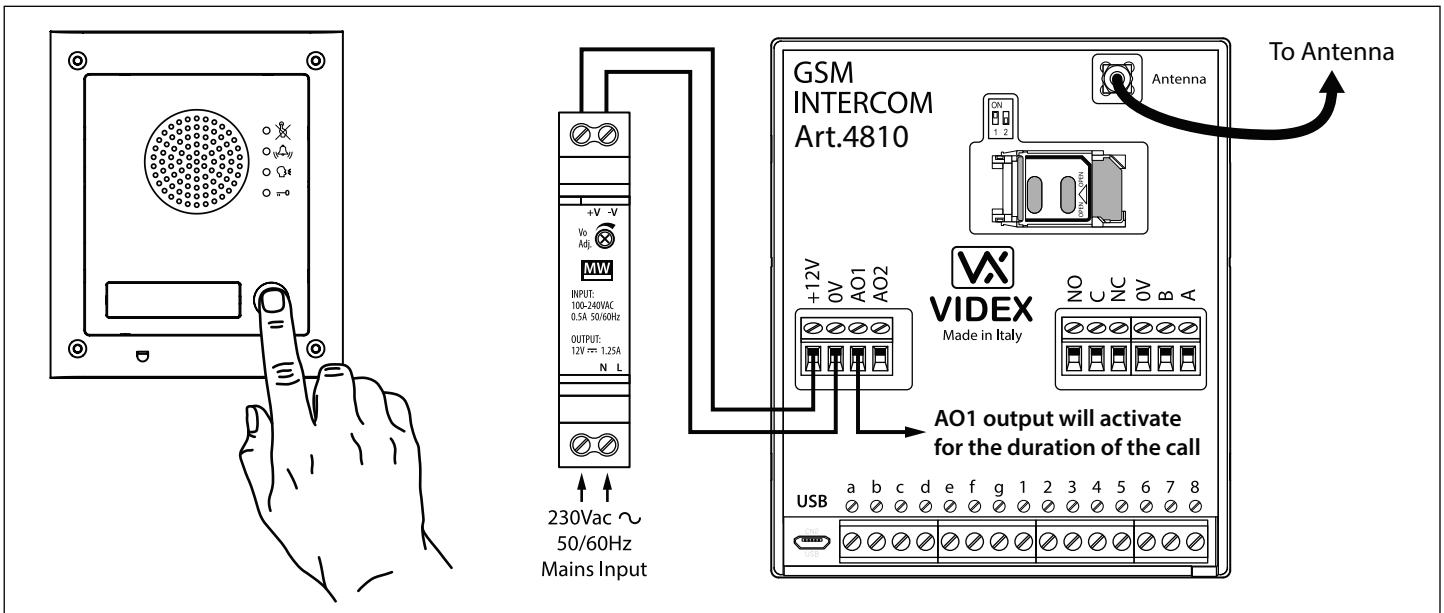

Fig. 30

AO1 SET TO MODE 01, 'USER ACTIVATED'

When set to mode 01 auxiliary output AO1 will activate when the terminals g & 5 are shorted together on the GSM PRO module or by pressing **6** on the telephone during a call, as shown in **Fig.31**. Auxiliary output AO1 will only activate for the programmed time.

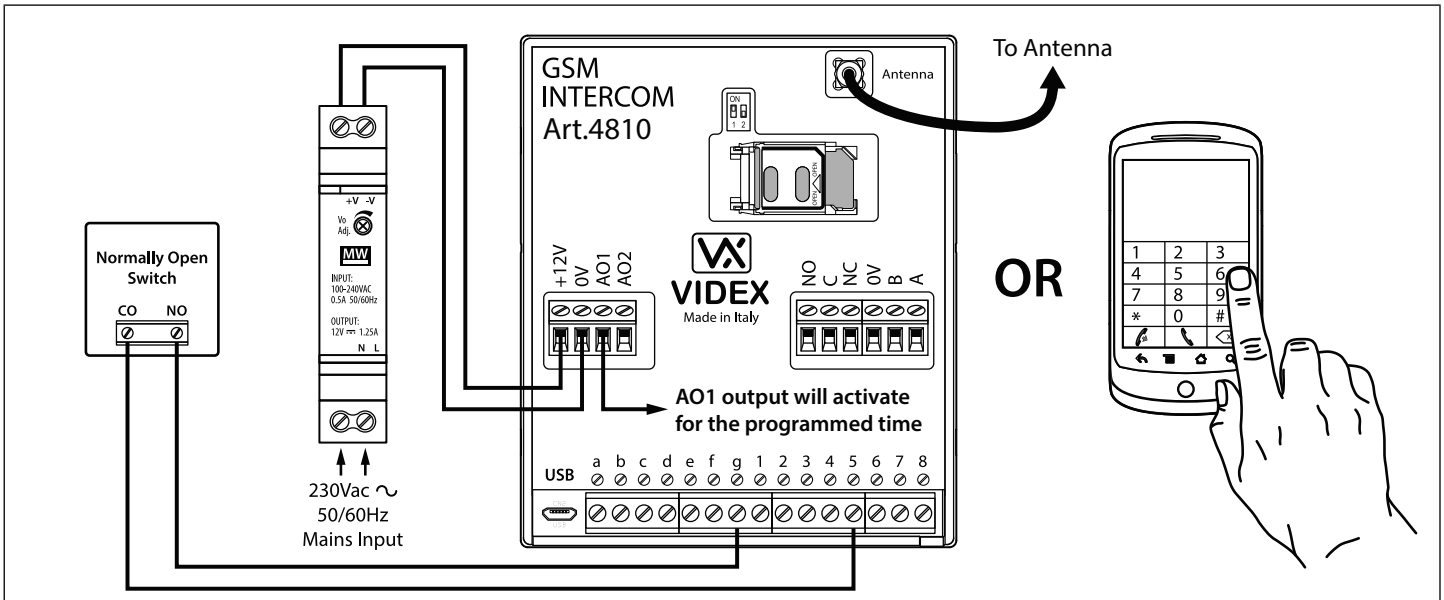

Fig. 31

Auxiliary Inputs/Outputs

AO1 SET TO MODE 02, 'STATUS INDICATION'

When set to mode 02 auxiliary output AO1 is used exclusively as a monitoring input. For example, checking if a gate/door is open or closed. Once set the AO1 input status can be interrorgated in two ways:

1. **During a call:** press **9** on the telephone keypad and listen to the number of beeps in the ear piece. One beep indicates the input is closed and two beeps indicates the input is open.
2. **At anytime:** send the SMS message **1111CHK?** to the GSM PRO intercom. An SMS message will be returned with **IN=OP** for open or with **IN=CL** for closed.

For this feature an additional relay will be required and the AO1 input must be wired as shown in **Fig.32**.

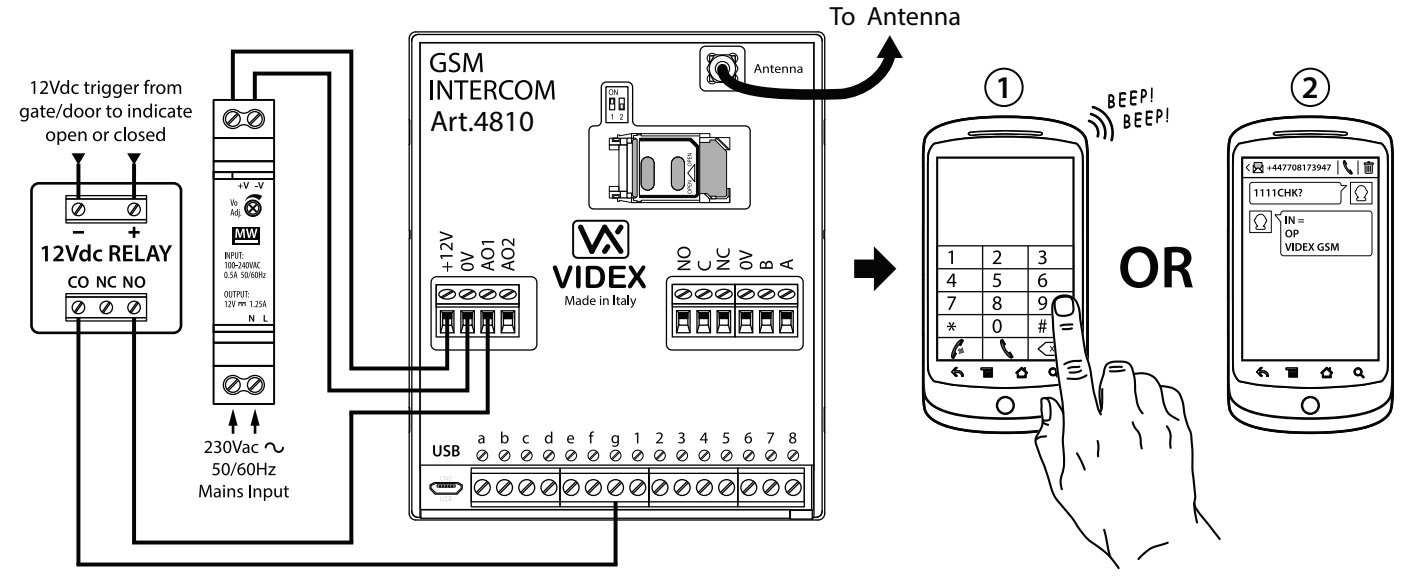

Fig. 32

AO1 SET TO MODE 03, 'DIVERT CALLS TO MASTER NUMBER'

It is possible to have the GSM PRO call buttons diverted to the master number (outside certain hours) using the **TBA** timeband feature (refer to timeband **TBA** programming notes on page 48). Alternatively it is possible to divert the GSM PRO call buttons to the master number when auxiliary output AO1 has been set to mode 03 (auxiliary output AO1 is used as a monitoring input). In this instance a switched common and normally open (CO/NO) trigger needs to be used to enable or disable 'divert calls to master number' and the auxiliary output AO1 must be wired as shown in **Fig.33**. In either case a master number is required following the **STM** store master number feature (refer to **STM** programming notes on page 47).

If there is no master number stored, the intercom will beep and the busy LED will flash once to indicate no call is taking place (if the speech board is switched ON, the GSM PRO module will announce **"the phone is switched off please try later"**).

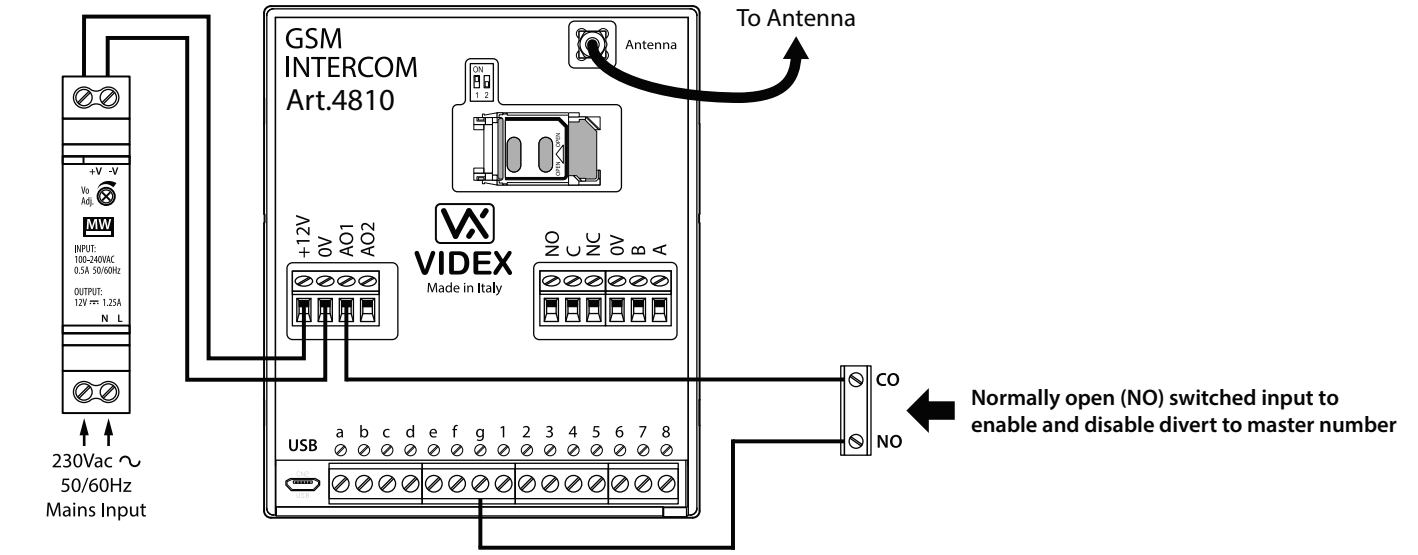

Fig. 33

Auxiliary Inputs/Outputs

AO1 SET TO MODE 04, 'CALL ACTIVATED (TIMED)'

Similar to mode 00, however, when set to mode 04 auxiliary output AO1 will activate when the call begins and deactivate when the auxiliary AO1 time expires, see **Fig.34**.

The auxiliary output AO1 time can be set using the SMS programming code **1111A1Tnn?** (where nn = time in seconds, also refer to notes **programming the GSM intercom** on pages 38 - 62) or setup by using the GSMSK PC programming software.

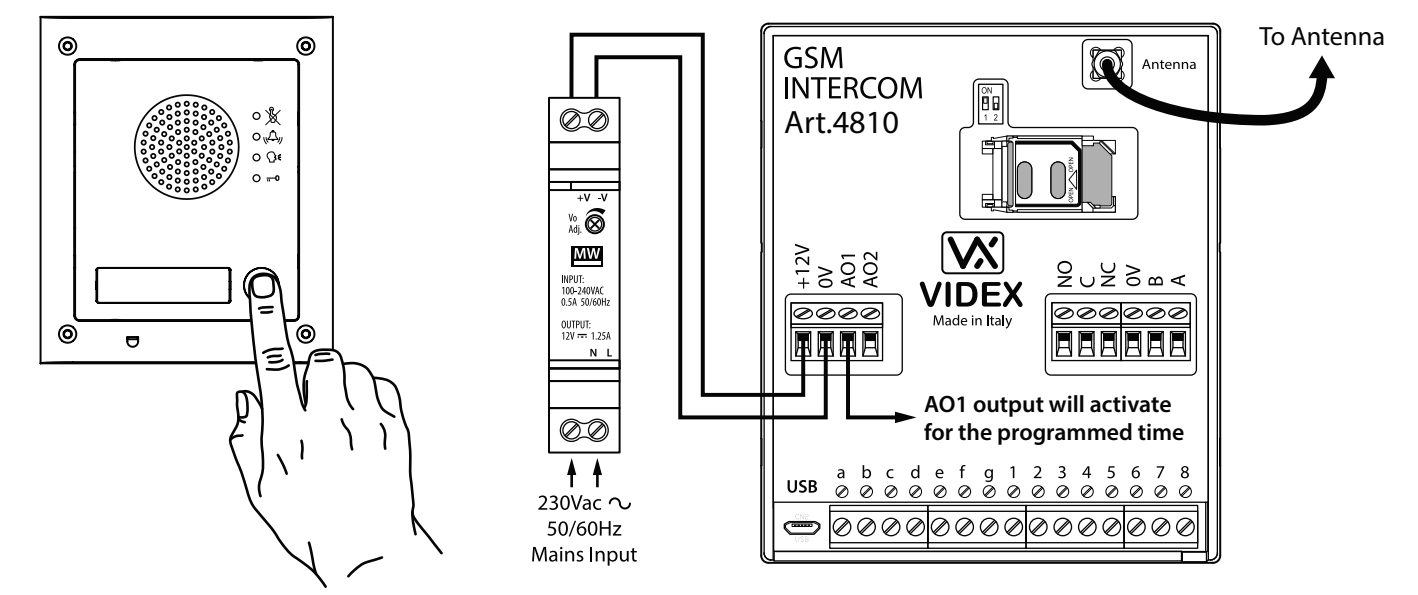

Fig. 34

AO1 SET TO MODE 05, 'ENABLE/DISABLE DIAL TO OPEN NUMBERS'

When the auxiliary output AO1 mode is set to 05 the dial to open numbers will only activate the GSM relay when a common and normally open (CO/NO) switch connected across terminals g & AO1, as shown in **Fig.35**, is open circuit. When the switch is closed and terminals g & AO1 are short together this will disable the dial to open numbers.

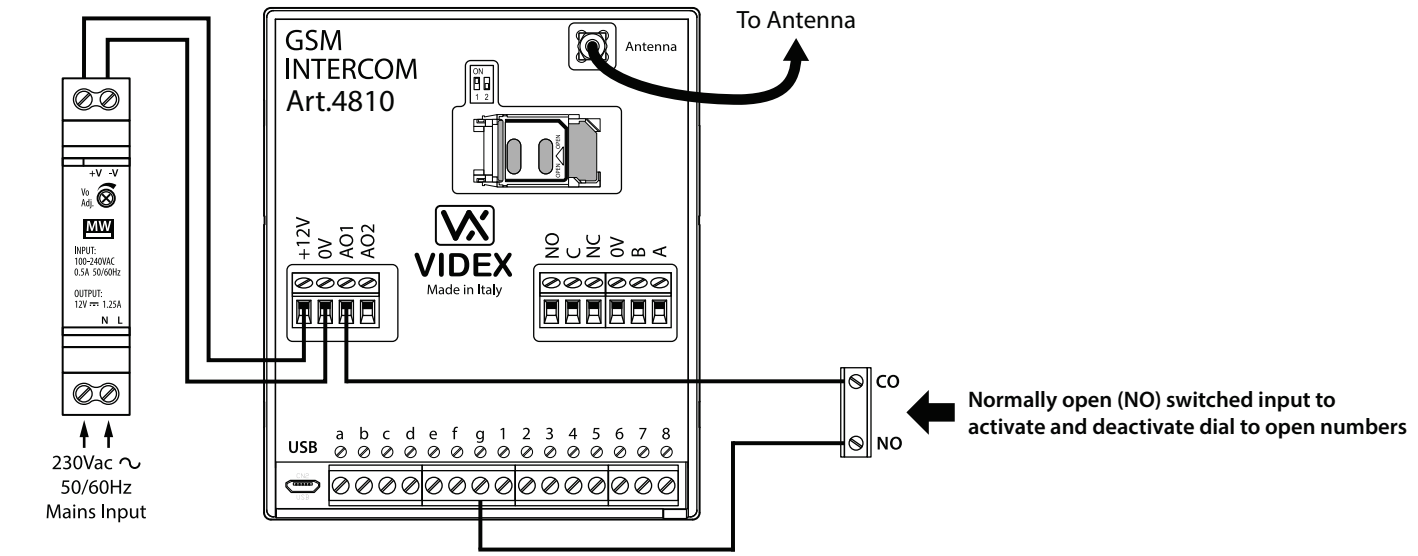

Fig. 35

<u>IMPORTANT NOTE:</u> When auxiliary output AO1 is set to a particular mode (00 - 05) it cannot be used as an input/output for anything else.

Auxiliary Inputs/Outputs

AUXILIARY OUTPUT AO2

The auxiliary output AO2 is an open collector output (switched low, 150mA max.) and can be used to switch a negative trigger onto a transistor switched device, for example an Art.506N, for the programmed **A2T** time (refer to notes on page 45 setting the **A2T** time). This can be particularly useful when switching an additional device for instance a secondary gate control.

The AO2 output can only be triggered in two ways:

1. **During a call:** press **5** on the telephone keypad to activate AO2 for the programmed **A2T** time.
2. **At anytime (depending on the operation required) send one of the following SMS messages to the GSM intercom: 1111A2O?** to trigger the AO2 output for the programmed **A2T** time. **1111A2L?** to latch the AO2 output. **1111A2U?** to unlatch the AO2 output.

For this feature an additional transistor switched device will be required. **Fig.36** below shows an example of connecting an Art.506N relay to the AO2 output.

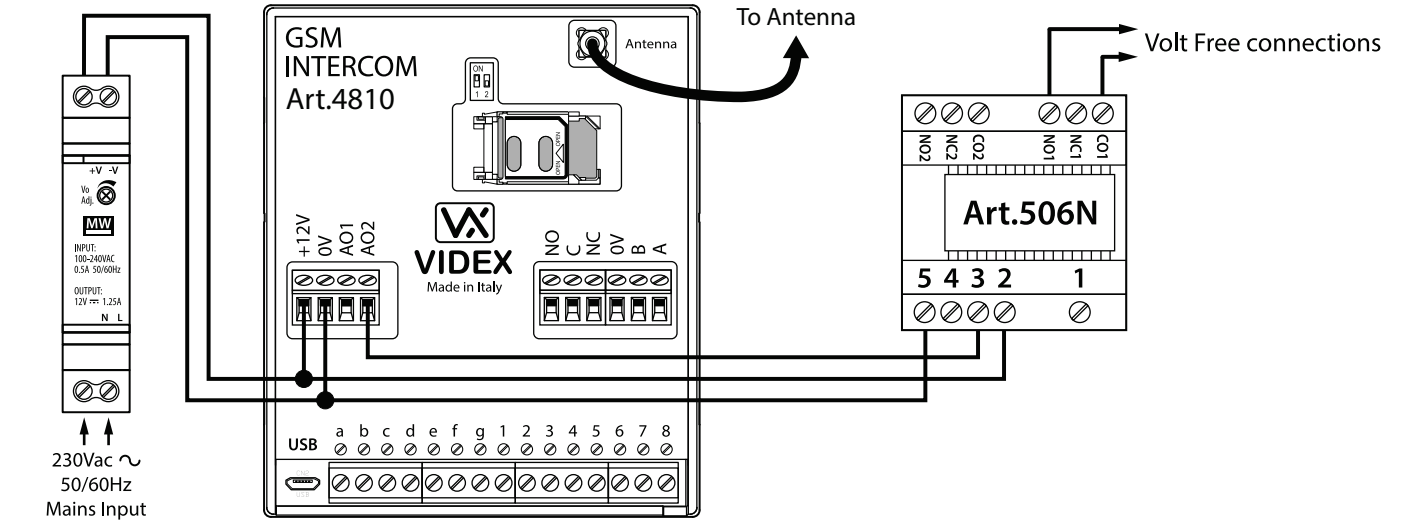

Fig. 36

AUXILIARY INPUT 2

Auxiliary input 2 connects across terminals g & 4 on the GSM PRO module. When this input is triggered it will send an SMS message to the master telephone number, as shown in **Fig.37**, (to store a master number **STM** follow the SMS programming section on page 47 or the relevant steps in the **GSMSK_66251720_EN_V2-0** software manual). Once this input is triggered it cannot be triggered again for 4 minutes, this is to avoid multiple SMS messages being sent for the same alarm.

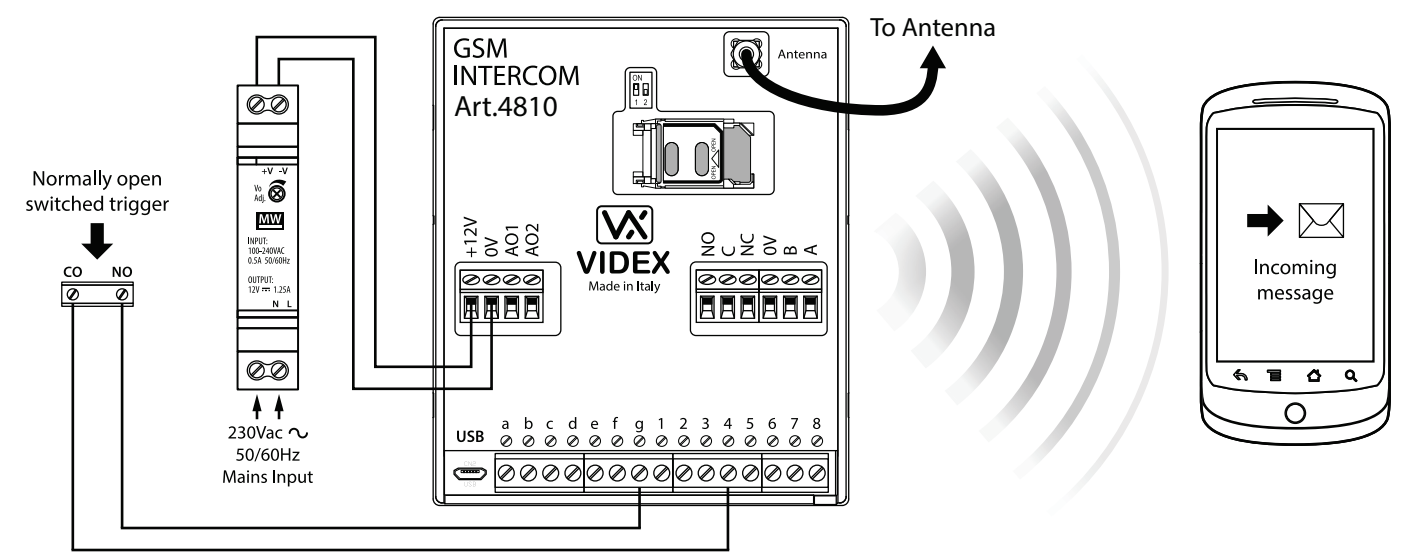

Fig. 37

<u>IMPORTANT NOTE:</u> auxiliary input 2 has been specifically setup for this function and does not activate auxiliary output AO2. Refer to the notes at the top of this page for activating auxiliary output AO2.

USB & RS485 Connection to a PC

CONNECTIONS TO A PC

The GSM PRO module includes two options for connecting to a PC: via a USB connection or via an RS485 connection. Both methods of connection are to allow for ease of programming and monitoring using the GSMSK PC software.

⚠ IMPORTANT: WHEN A USB CONNECTION IS PLUGGED INTO THE GSM PRO THE RS485 CONNECTION IS DISABLED.

All programming features described in this manual are also accessible using the software. Further information on using the GSMSK PC software can be found in the technical manual **GSMSK_66251720_EN_V2-0** (or later version).

OPTION 1: USB CONNECTION

The GSM PRO module can be connected using a standard micro-USB to USB cable as shown in **Fig.38**. This method of connection is primarily used for programming and setup of the GSM module only.

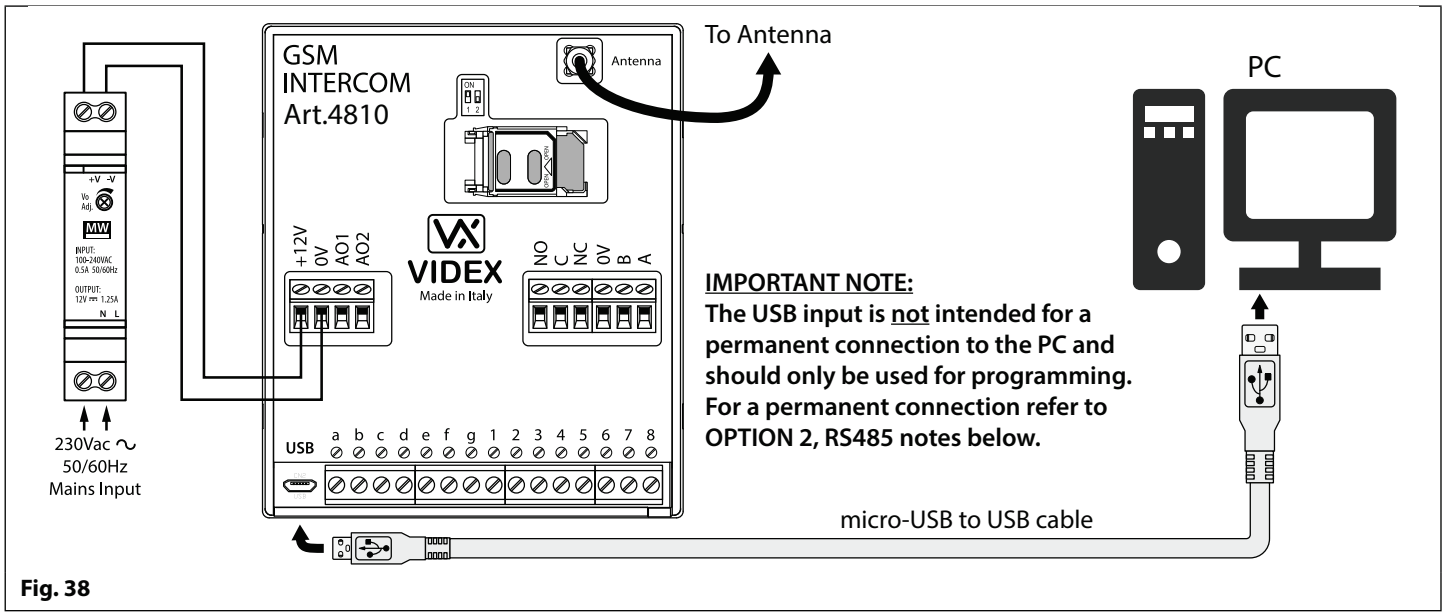

Fig. 38

OPTION 2: RS485 CONNECTION

The GSM PRO module can also be connected using an RS485 bus connection via an RS485 to USB converter (Art.481) as shown in **Fig.39**. This method of connection, like option 1, can be used for programming and setup of the GSM module, but can also be used in instances where a permanent connection to a PC is required for monitoring purposes and downloading event logs. When connected in this way the GSM module can only be connected as a 'one-to-one' bus connection to the PC, another GSM PRO module **cannot** be connected on the same RS485 bus to the PC.

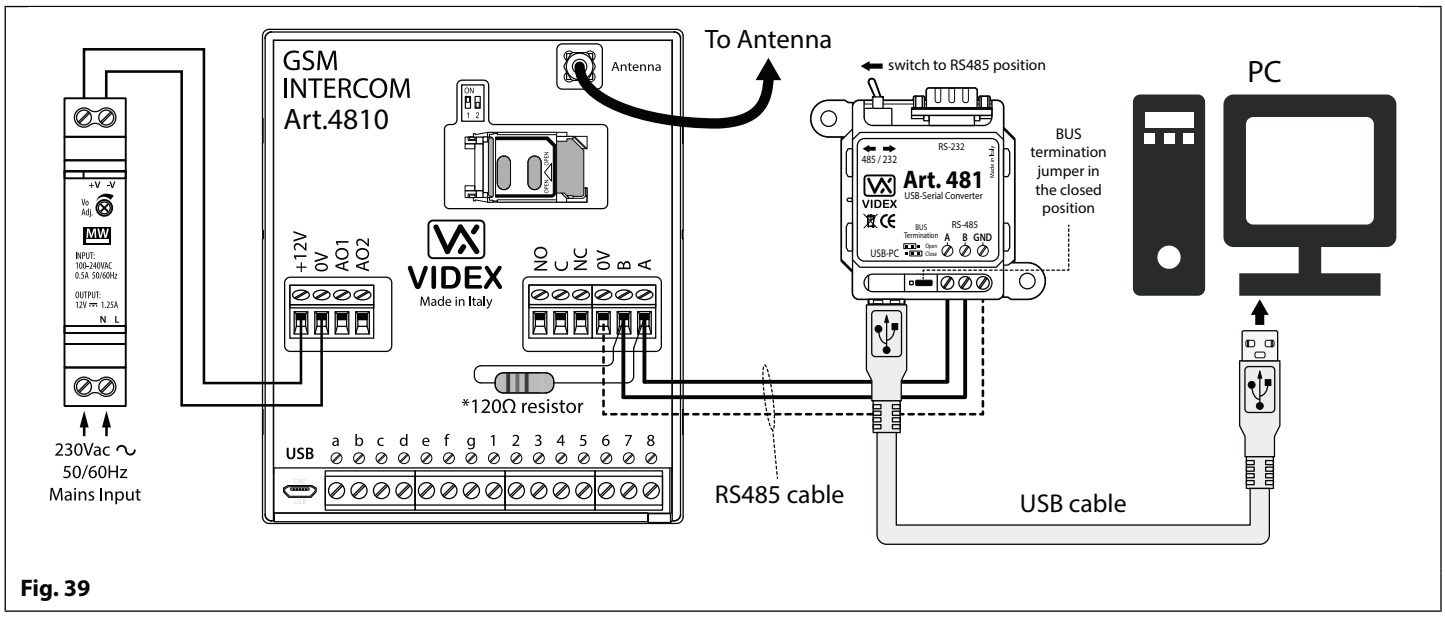

Fig. 39

*For end of line termination a 120Ω resistor must be fitted across the RS485 terminals A and B, as shown in **Fig.39**, but only if the GSM PRO intercom is the last device in line and over a great distance (500m max.). Over shorter distances the 120Ω resistor is not required and the bus termination jumper on the Art.481 can be set to the OPEN position.

RS485 Network Connection

ART. 4903 NETWORK CONNECTION USING RS485

As mentioned previously, refer to **Fig.16** on page 17, the Art.4903 keypad can be connected via the RS485 bus terminals to the Art.4810 GSM PRO module allowing additional features of the GSM PRO to become available, which include:

- the capacity to store up to 400 permanent access codes (000 - 399);
- assign any of the 400 access codes to an access level (0 - 9);
- the capacity to store up to 32 temporary access codes;
- allocate any of the 32 temporary codes to a specific time period (between 1 - 255 hours) after which time the code will be deleted;
- assign any of the access codes, whether permanent or temporary, to trigger either of or both of the relays (**RLY1** and/or **RLY2**).

Not only does the RS485 connection allow the Art.4903 keypad to be connected to the GSM PRO intercom, but also allows it to be networked with other Art.4903 keypads up to a total of 8 devices with each device setup with a unit ID (1 - 8). This feature also means that the networked keypads can have a permanent connection to a PC with the inclusion of an Art.481 (RS485 to USB converter), see **Fig.41** on page 29, the advantage of which is that the keypads can be programmed directly using the GSMSK PC software and if required monitored for events (refer to technical manual: **GSMSK_66251720_EN_V2-0** or later for more information).

ART. 4850R NETWORK CONNECTION USING RS485

Like the Art.4903 keypad the Art.4850R expansion reader can also be connected to the GSM PRO intercom via the RS485 terminals (up to a total of 8 devices, 7 readers with the GSM PRO's onboard reader as device ID.1) and each setup with a unit ID (1 - 8). As before this feature allows the additional proximity readers to be permanently connected to a PC with the inclusion of an Art.481 (RS485 to USB converter), see **Fig.42** on page 30.

The proximity readers operate as expansion readers only so the maximum capacity of proximity fobs/cards stored on the GSM PRO intercom is still only 1000 (000 - 999) fobs/cards.

<u>IMPORTANT NOTE:</u> Both the Art.4903 keypad and the Art.4850R proximity reader can be networked together with the GSM PRO provided that the overall number of devices on the RS485 bus does not exceed a total of 8 devices (excluding the Art.481 converter). All devices on the RS485 bus must have a unique unit ID setup including the GSM PRO intercom, see Fig.40 below.

It should also be noted that programming of the additional features for both the keypad and expansion reader can also be carried out by sending SMS text messages to the GSM PRO intercom (refer to the notes **programming the GSM intercom** on pages 38 - 62).

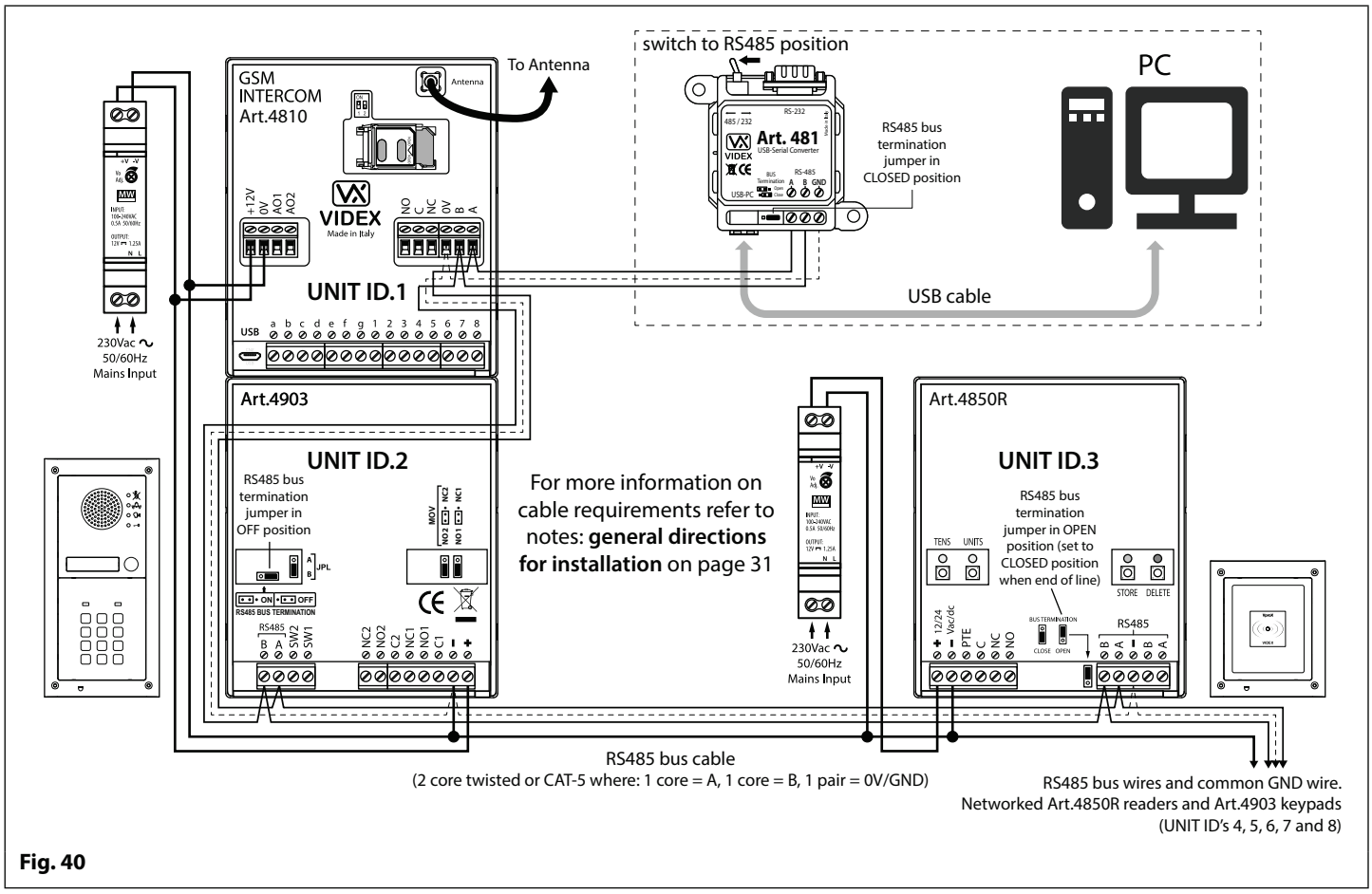

Fig. 40

RS485 Network Connection

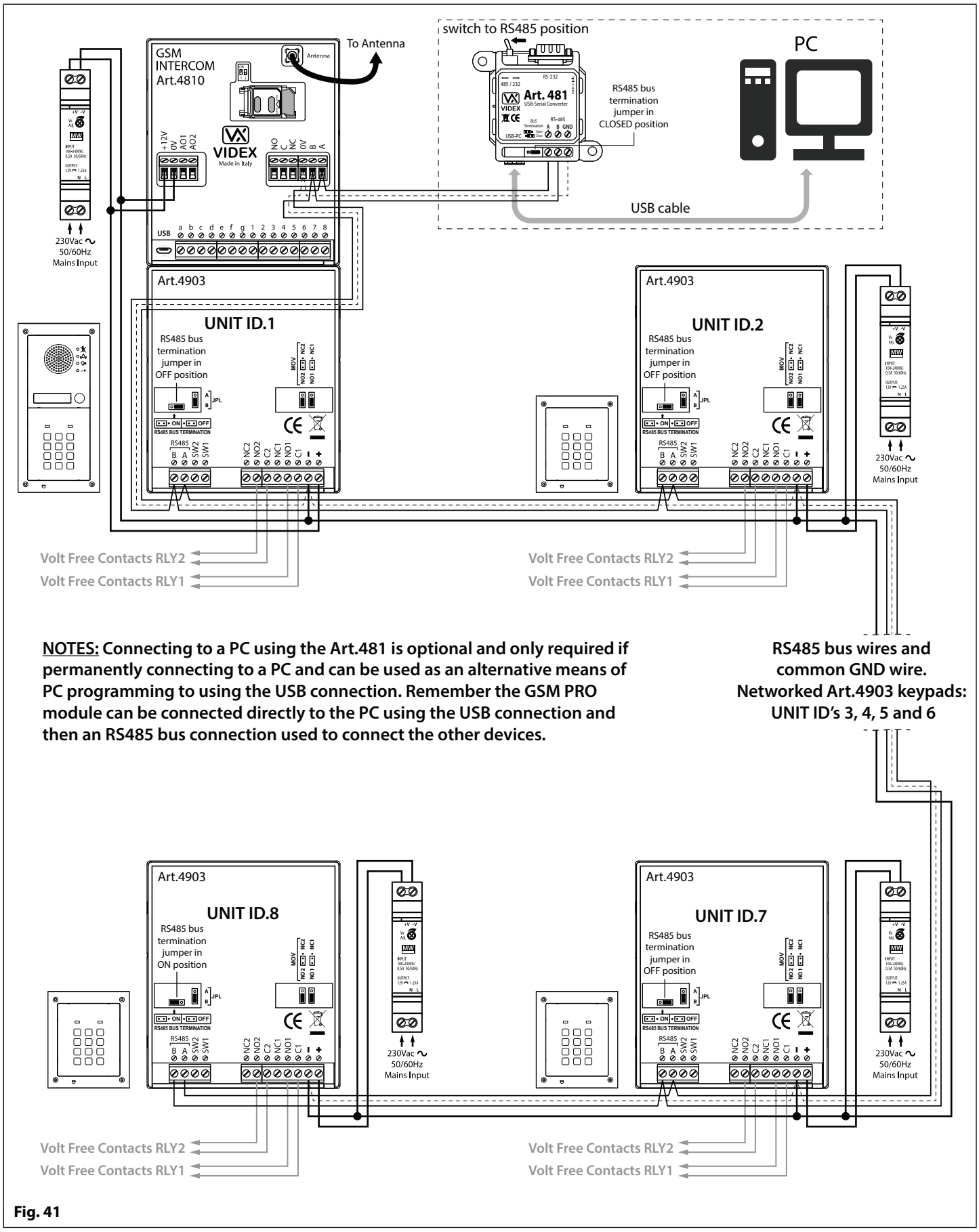

NOTES: **Connecting to a PC using the Art.481 is optional and only required if permanently connecting to a PC and can be used as an alternative means of PC programming to using the USB connection. Remember the GSM PRO module can be connected directly to the PC using the USB connection and then an RS485 bus connection used to connect the other devices.**

RS485 bus wires and common GND wire. Networked Art.4903 keypads: UNIT ID's 3, 4, 5 and 6

Fig. 41

IMPORTANT NOTE: **For each additional Art.4903 keypad a 12Vdc power supply (HDR-15-12) will be required.**

RS485 Network Connection

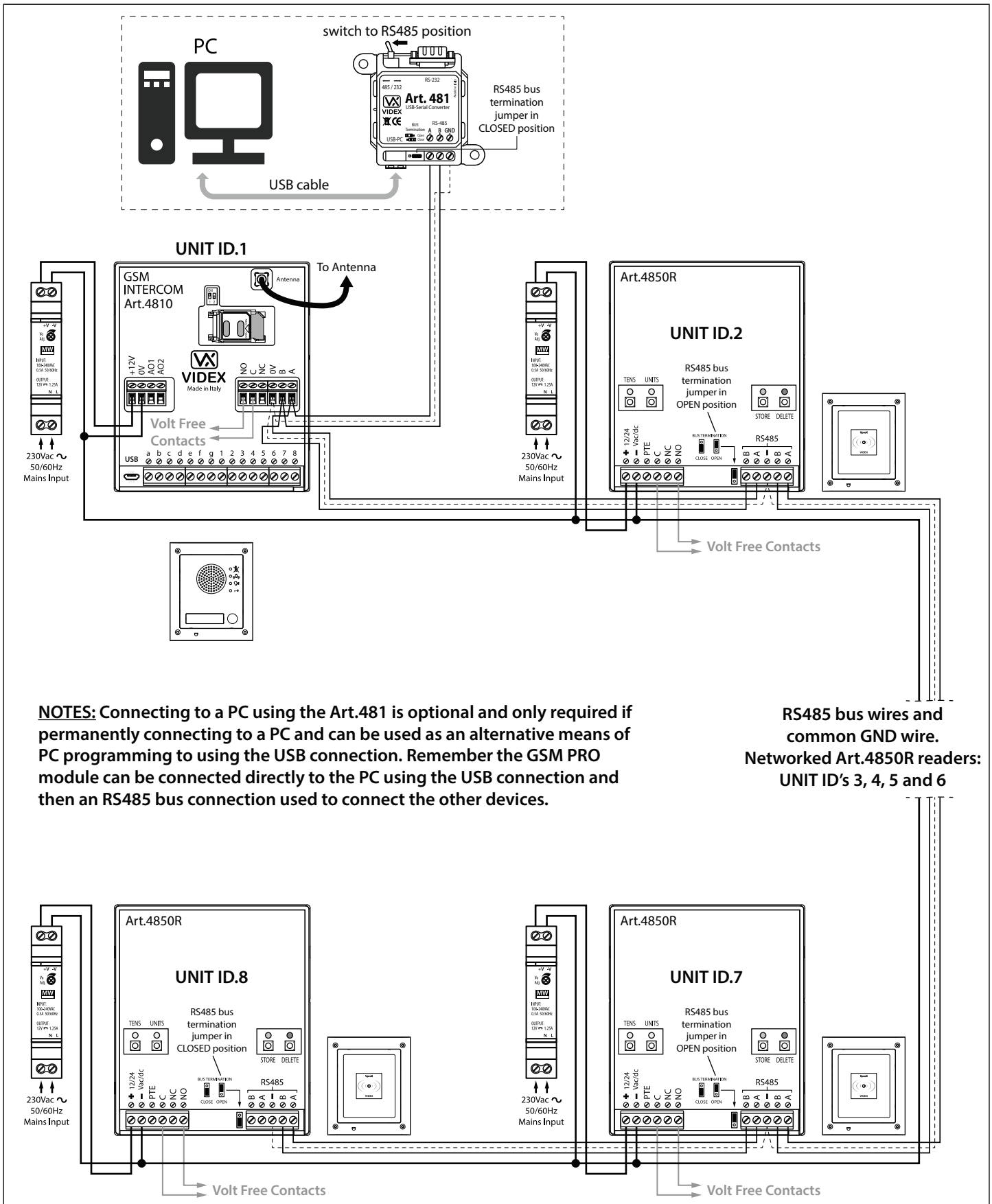

Fig. 42

IMPORTANT NOTE: For each additional Art.4850R proximity reader a 12Vdc power supply (HDR-15-12) will be required.

General Directions for Installation

CABLE SIZE GUIDE

POWER SUPPLY AND LOCK RELEASE CONNECTIONS

Refer to the table below for the connections for the power supply output to the Art.4810 GSM PRO intercom and the lock release connections.

Distance	20m	50m	100m
Cross Sectional Area (CSA)	0.5mm^2	1.0mm^2	1.5mm^2

Ideally the power supply should be located as close to the intercom panel as possible for best performance. The maximum acceptable resistance for the above cables = 3Ω or less for best possible performance.

RS485 CONNECTIONS

A CAT-5 cable is acceptable where 1 pair is used for the **0V/GND** connection and a second pair is split between the **A** and **B** connections (i.e. 1 core of the pair is used for the **A** terminal, 1 core of the pair is used for the **B** terminal, see **Fig.43**).

The total overall distance between the first RS485 device in line (Art.481 or GSM PRO module) and the last RS485 device in line (Art.4903 or Art.4850R) should be no more than 500m max. for the best possible performance, see **Fig.44**. It is also important that the end of line RS485 bus termination of the respective device (Art.4903 or Art.4850R) is in the **ON** position, in the case of the GSM PRO module a 120 Ohm resistor should be fitted across the **A** and **B** bus terminal connections (unless it's connected with an Art.481, in which case the bus termination jumper on the Art.481 should be in the closed position as this would be the last RS485 device in line).

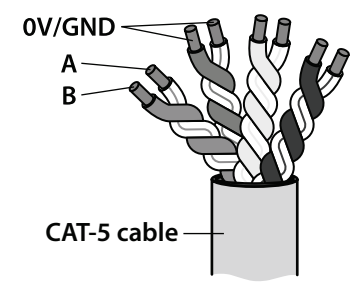

Fig. 43

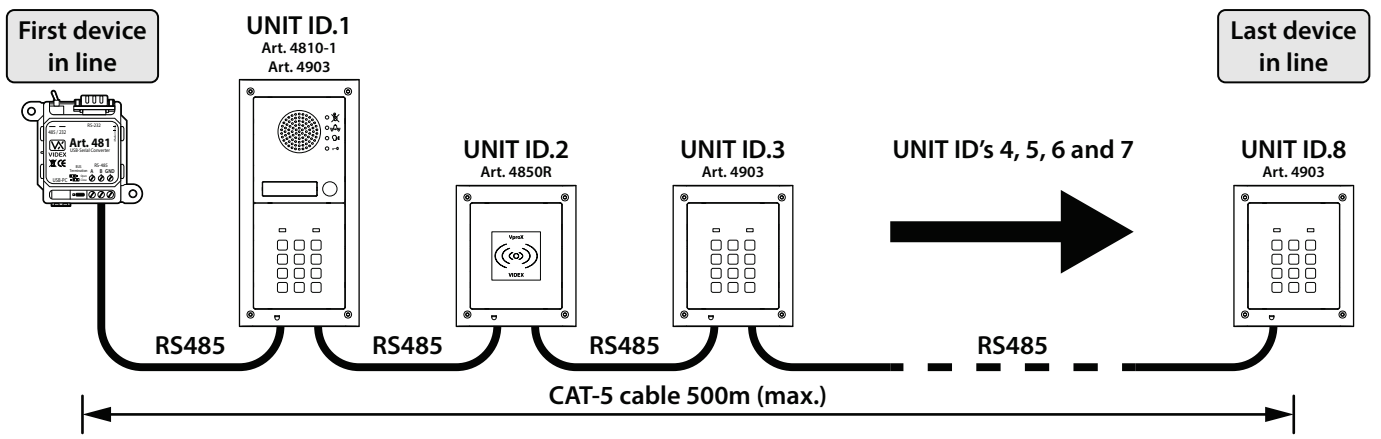

Fig. 44

<u>IMPORTANT NOTE:</u> Only bare copper (BC) cable should be used (solid or stranded is acceptable). Please be aware that when selecting a cable the following <u>should NOT</u> be used: Copper Coated Steel (CCS) and Copper Clad Aluminium (CCA). While these types of cable may offer a low cost solution they will have a higher resistance than pure copper cable and can affect the overall performance of the system therefore Videx <u>DO NOT</u> recommend these types of cable.

GENERAL INSTALLATION NOTES

- Check that all components are free from damage before installing (**<u>do not proceed</u> with installation in the event of damage**).
- Keep all packaging away from children (**please dispose of any excess waste and packaging responsibly**).
- **<u>Do not obstruct</u>** the ventilation openings or slots on any of the devices.
- All connections to mains voltages must be made to the current national standards (I.E.E. wiring regulations for the UK or the appropriate standards of your country if installing overseas).
- Install an appropriate fused spur or isolation switch to isolate the mains.
- Isolate the mains before carrying out any maintenance work on the system.
- Avoid water ingress into the rear of the module, always seal the module frame after installation using a suitable silicon based sealant.
- All intercom and access control cables must be routed separately from the mains (ideally in a separate cable tray or duct).

LOCK RELEASE WIRING AND BACK EMF PROTECTION

When fitting an electric lock release back EMF protection will be required. If fitting an AC lock release then a 100nF ceramic disc capacitor should be fitted across the terminals of the lock, shown in **Fig.45**. If fitting a DC lock release (fail secure or fail safe) then a 1N4002 diode should be fitted across the terminals on the lock, shown in **Fig.46**.

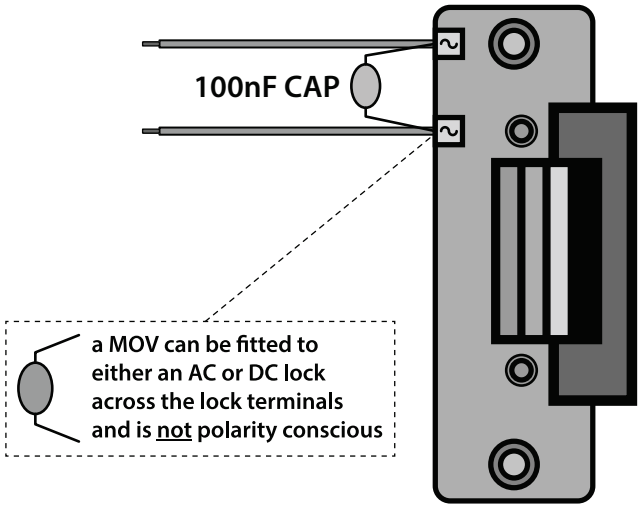

Fig. 45

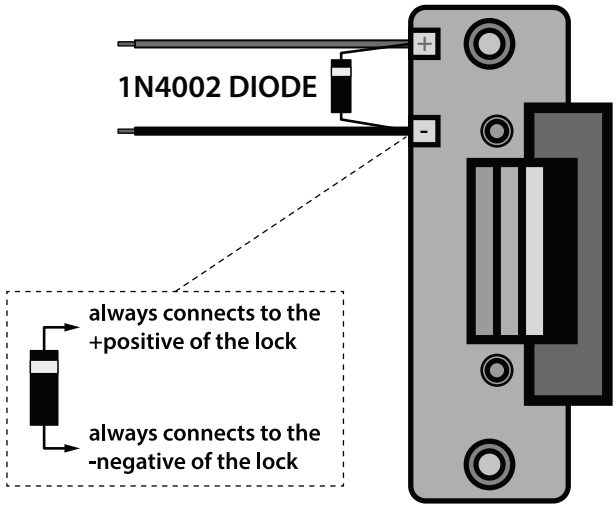

Fig. 46

If a 100nF ceramic disc capacitor or a 1N4002 diode are not available then a 14 - 20V MOV (metal oxide varistor) can be fitted across the lock terminals instead (refer to **Fig.45** above) and can be fitted on both an AC and DC lock. Connection examples can also be seen on the various wiring diagrams on pages 21 and 22.

CONNECTION TO MAINS, SAFETY AND GUIDANCE NOTES

⚠ **IMPORTANT: PLEASE READ THESE INSTRUCTIONS CAREFULLY BEFORE COMMENCING WITH THE INSTALLATION.**

⚠ **IMPORTANT: IT IS RECOMMENDED THAT ANY CABLING AND VIDEX PRODUCTS BE INSTALLED BY A COMPETENT AND QUALIFIED ELECTRICIAN, SECURITY INSTALLATION SPECIALIST OR COMMUNICATIONS ENGINEER.**

- **DO NOT** install any Videx product in areas where the following may be present or occur:
- Excessive oil or a grease laden atmosphere.
- Corrosive or flammable gases, liquids or vapours.
- Possible obstructions which would prevent or hinder the access and/or removal of the Videx product.

MAINS CONNECTION

The system **MUST** be installed in accordance with the current I.E.E. regulations (in particular **I.E.E. Wiring regulations BS7671** for the UK), or the appropriate standards of your country if installing overseas, in particular Videx recommends:

- Connecting the system to the mains through an all-pole circuit breaker (refer to **Fig.47**) which shall have contact separation of at least 3mm in each pole and shall disconnect all poles simultaneously.
- That the all-pole circuit breaker shall be placed in such a way to allow for easy access and the switch shall remain readily operable.
- Ensuring that the mains supply (Voltage, Frequency and Phase) complies with the product rating label (this is usually located on the topside of the power supply).
- Isolating the mains before carrying out any maintenance work on the system.

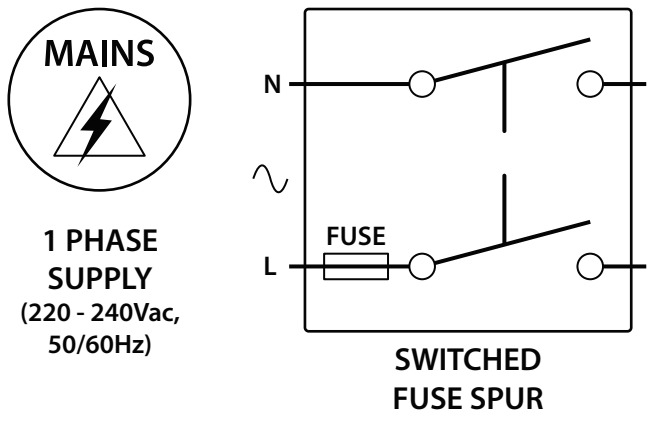

Fig. 47

General Directions for Installation

POWER SUPPLY INSTALLATION

Follow the steps below when fitting the HDR-15-12 (12Vdc 1.25A) power supply.

- Fix the power supply to a DIN rail (following **Fig.48**, **Fig.49** and **Fig.50**).
- Switch **OFF** the mains using the circuit breaker (mentioned previously) and then make the connections as required shown on the various wiring diagrams throughout this manual.
- Check the connections and secure the wires into the terminals ensuring that the low voltage (signal) cables are routed separately from the high voltage (mains) cables.
- If applicable replace the terminal covers and fix them back into place using the relevant screws.
- When all connections are made restore the mains supply.

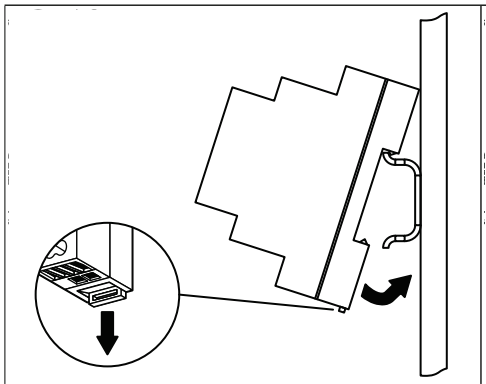

Fig. 48

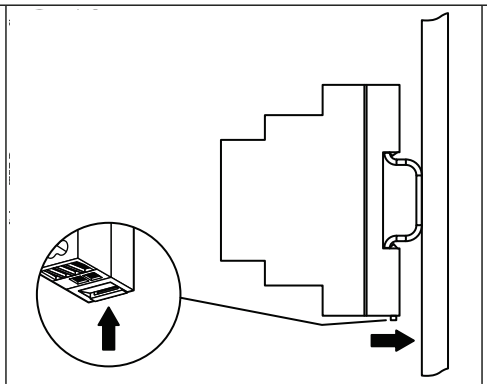

Fig. 49

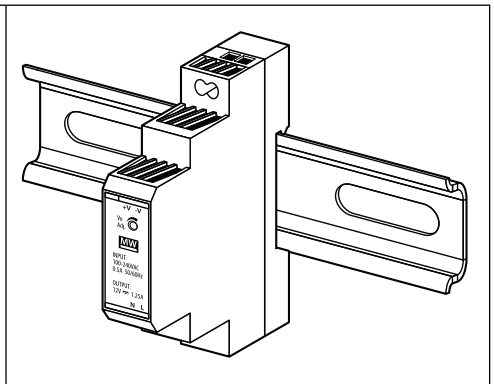

Fig. 50

PANEL CARE

The door panel's facia is either mirror finish stainless steel or matt finish aluminium. It is important that the facia is cleaned on regular occasions to prevent dirt build up and tarnishing of the metal.

A clean and soft cloth can be used with moderate warm water or non-aggressive cleansers. Additional care should be taken to follow the grain of the metalwork when polishing panels with a matte finish and always only polish in one direction to avoid light scratching of the plate, see **Fig.51**. Also try to avoid any polish build up around the panel's buttons which may prevent the buttons from operating correctly.

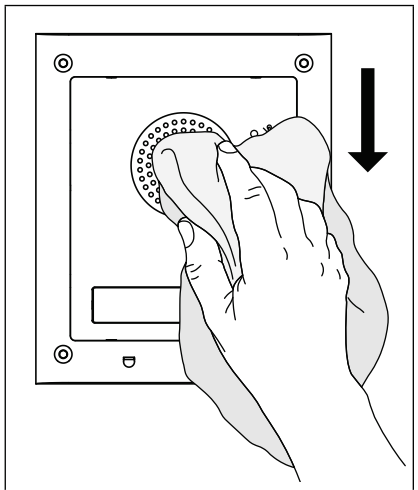

Fig. 51

<u>DO NOT USE ANY OF THE FOLLOWING:</u>

- Abrasive liquids;
- Chlorine-based liquids;
- Metal cleaning products (including Sidol stainless steel cleaner as this can affect the etching and/or engraving);
- Hydrochloride bleaches.

⚠ **<u>IMPORTANT NOTE:</u> IT IS IMPORTANT TO REGULARLY MAINTAIN THE "UP KEEP" OF THE GSM PRO PANEL (CLEANING AND GENERAL MAINTENANCE ETC.) ANY FAULT OR DAMAGE THAT MAY OCCUR TO THE GSM PRO PANEL DUE TO THE LACK OF CLEANING AND MAINTENANCE IS NOT THE RESPONSIBILITY OF VIDEX.**

Fitting the SIM & Connecting Power

FITTING THE SIM CARD AND CONNECTING THE POWER TO THE GSM INTERCOM

After connecting the power supply, antenna, lock output and any auxiliary devices as shown in this manual and before powering up, a SIM card must be installed (the SIM must already be registered with the network provider). The SIM holder can be found on the back of the module under the SMA antenna connection. A SIM card from most network providers can be used (remember a network 3 SIM will only work with the 3G version of the GSM PRO intercom). Follow the steps below to insert the SIM card.

FITTING THE SIM

1. On the back of the Art.4810 GSM PRO module slide the SIM holder to the left until it 'clicks', as shown in **Fig.52**.
2. The SIM holder is hinged and will open out to the left, see **Fig.53**.
3. Place the SIM card into the holder (it will only fit one way, see **Fig.54**) and fold the holder back down, see **Fig.55**.
4. Slide the SIM holder back to the right until it 'clicks', see **Fig.56**.
5. Once the SIM is in place connect the appropriate call buttons following the button matrix diagram shown in **Fig.4** on page 7.
6. Connect the Art.432 GSM antenna and then connect the 12Vdc power supply but **DO NOT** power up the system yet.
7. Follow the initialisation process described below.

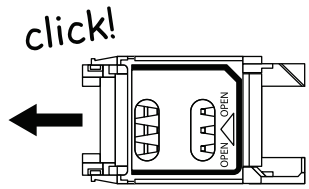

Fig. 52

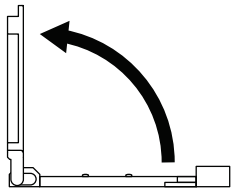
Fig. 53

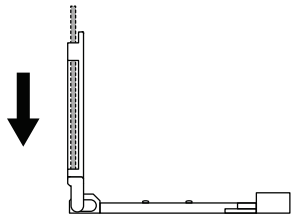
Fig. 54

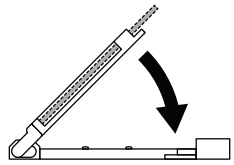
Fig. 55

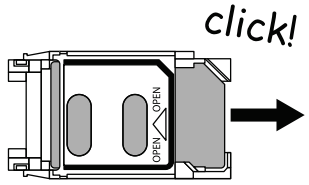

Fig. 56

POWER UP INITIALISATION SEQUENCE

The Art.4810 GSM PRO module requires approximately 30 seconds to initialise properly. We recommend **NOT** sending any SMS messages or pressing buttons during this time.

1. First check all the necessary connections have been made correctly, following the wiring diagrams shown in this manual, and when ready power up the system.
2. The busy LED will start to flash continuously, as shown in **Fig.57** (this will continue to flash until the end of the initialisation process).
3. Two short beeps will be heard from the GSM module followed by a 15 second delay, as shown **Fig.58**.
4. Next a single short beep will be heard (in the meantime the busy LED will continue to flash while it registers with the chosen network), then after a further 15 second delay the busy LED will stop flashing to indicate that the GSM module has registered with the network, as shown in **Fig.59**.
5. The GSM PRO intercom is ready to be programmed.

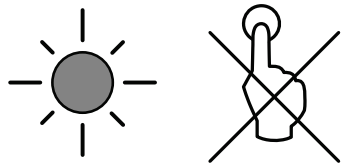
Fig. 57

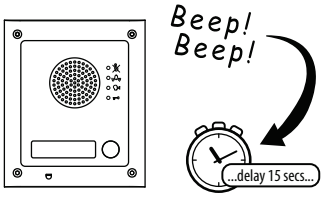

Fig. 58

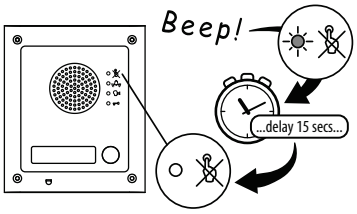

Fig. 59

Reset Procedure

RESETTING THE GSM MODULE TO FACTORY DEFAULTS

There are two 'hard-wired' reset options available. The first will reset the master code only and the second will reset everything and clear all the stored telephone numbers, proximity cards, access codes, timebands and all settings.

RESETTING THE MASTER CODE TO 1111 (4x1)

1. Power down the GSM PRO intercom module.
2. Put a short across terminals g & 7 on the back of the GSM PRO module, as shown in **Fig.60**.
3. Power up the GSM PRO module, 2 beeps will be heard followed by a brief delay and then a 3rd beep, as shown in **Fig.61**.
4. After the 3rd beep remove the short, as shown in **Fig.62**.
5. The master code is now reset back to **1111** (4x1).

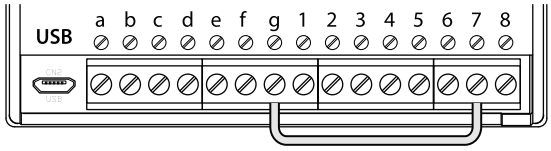

Fig. 60

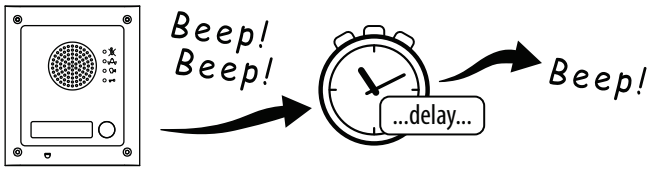

Fig. 61

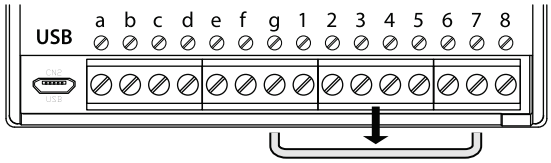

Fig. 62

FULL SYSTEM RESET

1. Power down the GSM PRO intercom module.
2. Put a short across terminals g & 8 on the back of the GSM PRO module, as shown in **Fig.63**.
3. Power up the GSM PRO module, 2 beeps will be heard followed by a brief delay and then a further 2 beeps, as shown in **Fig.64**.
4. After the 4th beep remove the short, as shown in **Fig.65**.
5. All settings on the GSM PRO module are returned to factory defaults.

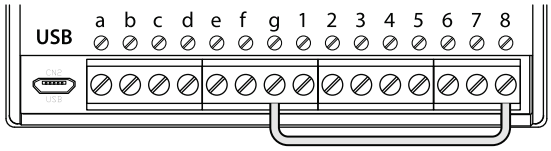

Fig. 63

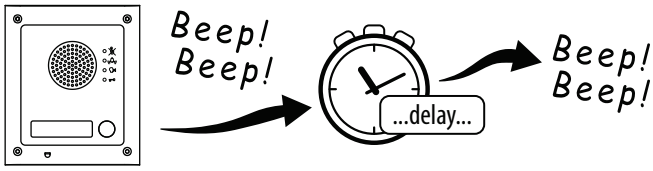

Fig. 64

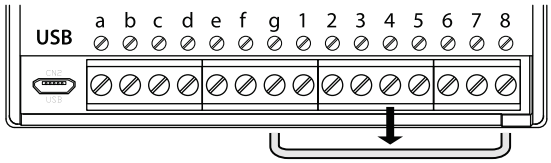

Fig. 65

4000 Series Back Box Installation

EXAMPLE: INSTALLING A 4000 SERIES FOUR MODULE BACK BOX

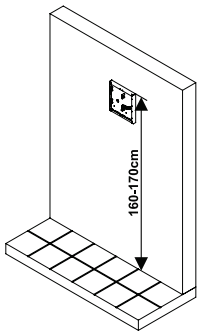

Fig. 66

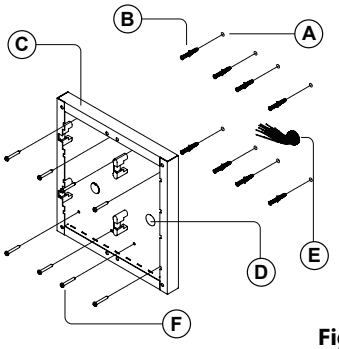

Fig. 67

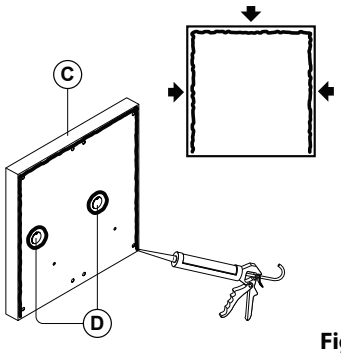

Fig. 68

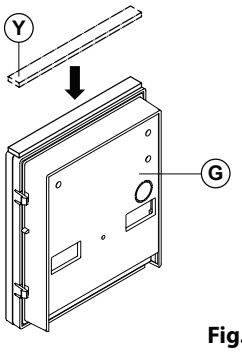

Fig. 69

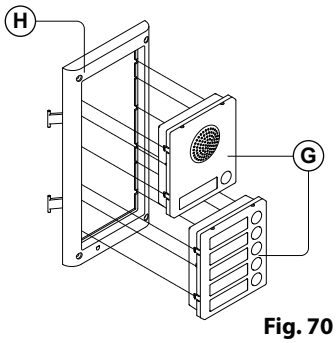

Fig. 70

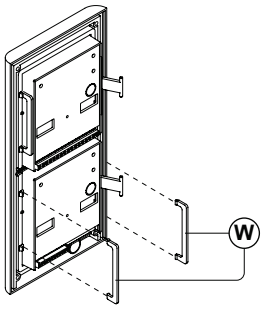

Fig. 71

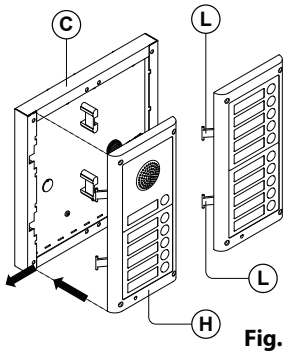

Fig. 72

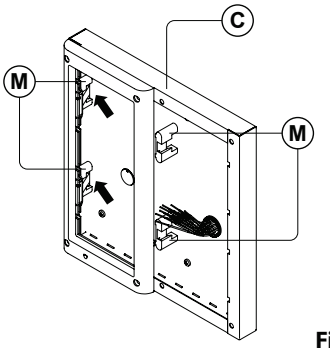

Fig. 73

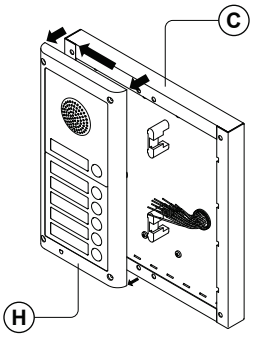

Fig. 74

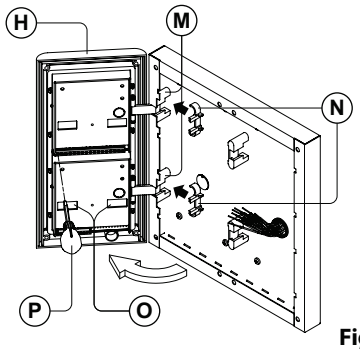

Fig. 75

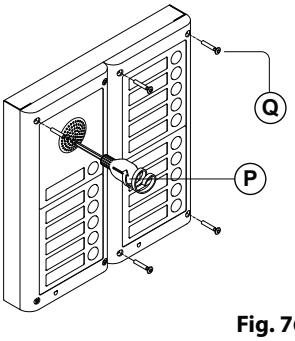

Fig. 76

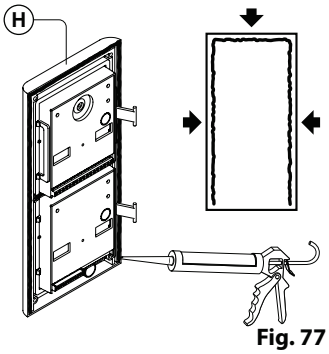

Fig. 77

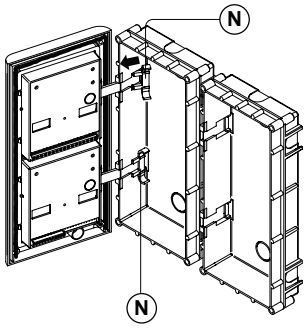

Fig. 78

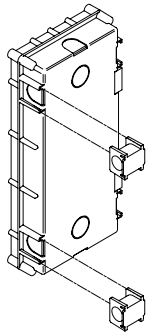

Fig. 79

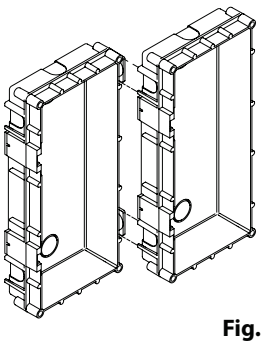

Fig. 80

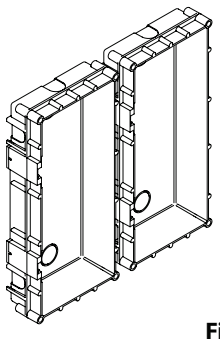

Fig. 81

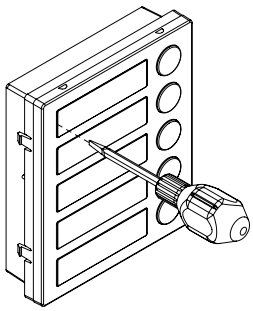

Fig. 82

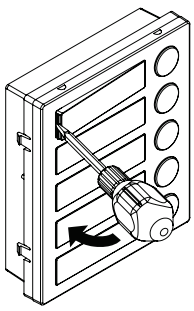

Fig. 83

4000 Series Back Box Installation

INSTALLING A SURFACE MOUNT DOOR STATION

1. Place the surface box against the wall (165-170cm between the top of the box and the floor level as shown in **Fig.66**), mark the fixing holes Ⓐ for the wall plugs Ⓑ and the hole for the cables Ⓔ **(Fig.67).** Observe the orientation of the box with the hinge on the left;

> ⚠ **In order to prevent water ingress we highly recommend using a silicon sealant between the wall and the back box Ⓒ, ON THE LEFT, TOP AND RIGHT SIDES ONLY AND AROUND ALL HOLES Ⓓ. DON'T USE SILICON SEALANT ON THE BOTTOM SIDE OF THE BACK BOX (Fig.68);**

2. As shown on **Fig.67,** drill the fixing holes Ⓐ, insert the wall plugs Ⓑ and feed the cables Ⓔ through the surface box opening Ⓓ, fix surface box Ⓒ to the wall using the screws Ⓕ;
3. Apply the Ⓨ neoprene seal on top of each module Ⓖ as shown in **Fig.69**;
4. Before installation of the module support frame, hook the modules Ⓖ to the support frame Ⓗ as shown in **Fig. 70** then, as shown in **Fig.71,** fit the two anti-tampering locks Ⓦ for each module (do the same for the second module support frame);
5. When you have more than one support frame, hook the support frame to the surface box starting from the left. For convenience we will describe how to attach the left frame but the same procedure must be carried out for the right frame. As shown in **Fig.72,** hook the module support frame Ⓗ (complete with modules) to the surface box Ⓒ moving the frame as suggested from the pointers. Ensure that the pivots Ⓛ **(Fig.72)** go inside the relevant hinge housing Ⓜ as shown in **Fig.73**;
6. As shown on **Fig.74,** pull back the module support frame Ⓗ while moving it slightly to the left as suggested by the pointers;
7. As shown in **Fig.75,** open the module support frame Ⓗ as suggested by the pointer, hook the hinge locks Ⓝ to the hinge housings Ⓜ, make the required connections using the screwdriver provided Ⓟ (flat blade end) and make the required adjustments by adjusting the settings (through openings Ⓞ) and adjust trimmers;
8. Repeat the same steps described above for the second module support frame (or for the third if available);
9. When the system has been tested and is working correctly, move back the module support frames carefully, fix them to the surface box using the screwdriver provided Ⓟ (torx end) and the pin machine torx screws Ⓠ **(Fig.76). Note: do not over tighten the screws more than is necessary.**

INSTALLING A FLUSH MOUNTING DOOR STATION

When flush mounting and the number of modules is greater than 3, the required back boxes need to be linked together (before embedding them into the wall) as shown on **Fig.79, Fig.80 and Fig.81:**

- Arrange the back boxes and remove knockouts to allow cables to be fed from one back box to the other;
- Hook the spacers to the first back box then hook the second back box to obtain the result shown on **Fig.81;**

1. Protect the module support frame fixing holes from dust then embed the back box into the wall (165-170cm between the top of the box and the floor level as shown on the **Fig.66**) feeding the cables Ⓔ **(Fig.67)** through a previously opened hole in the box. Observe the direction of the box ensuring the hinge is on the left and take care that the box profile is in line with the finished wall profile;

> ⚠ **In order to prevent water ingress we highly recommend using a silicon sealant between the module support frame Ⓗ and the back box Ⓒ, ON THE LEFT, TOP AND RIGHT SIDES ONLY. DON'T USE SILICON SEALANT ON THE BOTTOM SIDE OF THE MODULE SUPPORT FRAME (Fig.77);**

2. Continue from step **4** of surface mounting instructions, but at step **7** hook the hinge locks Ⓝ as shown on **Fig.78.**

> ⚠ **Note: if additional holes are made in the surface box, oxidation problems may appear unless the unprotected metal is coated with a protective paint.**

NOTES

- The screwdriver's blade has two sides, one flat and one torx, to select one of them unplug the blade from the screwdriver body and plug it into the required side.
- The example shows the use of only one back box bottom hole for wires, this is done to keep file drawings clear. Naturally the installer can use the left hole or the right or both if required.

HOW TO REMOVE THE CARD NAME HOLDER

- To avoid damage to the module front plate, tape the side that will be in contact with the screwdriver blade;
- Insert the screwdriver (flat side) into the card-holder hole as shown in **Fig.82**;
- Move the screwdriver to the left as shown in **Fig.83** to extract the card name holder;
- Edit the card name then replace it inside the holder and refit: insert the holder inside its housing from the left or right side then push the other side until it clips into place.

Programming the GSM Intercom

PROGRAMMING THE GSM INTERCOM

Programming the GSM PRO intercom can be carried out in two ways, either by sending text (SMS) messages or by using the GSMSK PC software (ver 4.0.0.0 or later), also refer to the programming manual **GSMSK_66251720_EN_V2-0** (or later).

IMPORTANT NOTE: When you are required to use " in a text message it is very important to use the correct symbol and not for example ' (or two ' single apostrophes side by side which you will see look the same but will be interpreted differently by the GSM PRO intercom panel).

PROGRAMMING BY TEXT MESSAGE

Programming by text message is a simple way to customise the settings of the GSM PRO intercom panel and add or delete telephone numbers. If you have a large number of buttons or telephone numbers to enter you may find programming easier with the GSMSK PC software. Simply send texts in the following format shown below to the telephone number of the SIM within the GSM PRO intercom panel:

<4 DIGIT CODE> <3 DIGIT FUNCTION CODE> <OPTIONAL DATA> <OPTIONAL ?>

4 DIGIT CODE This code prevents unauthorised access to the programmable features of the system. The code must be four digits long but can be any combination using digits 0 – 9. The default code is 1111 and will be used for all examples in this manual.

3 DIGIT FUNCTION CODE The 3 digit function code identifies the programmable feature to be changed. The code must be in capital letters. The following table lists the available codes.

DESCRIPTION	CODE	EXAMPLE	SETTINGS	DEFAULT	PAGE
Store a primary telephone no.	**STN**	1111STNnnn"01912243174"	nnn = 001 - 050	n/a	40 - 41
Store divert 1 telephone no.	**STD**	1111STDnnn"01912241559"	nnn = 001 - 050	n/a	40 - 41
Store divert 2 telephone no.	**STE**	1111STEnnn"01912243678"	nnn = 001 - 050	n/a	40 - 41
Store divert 3 telephone no.	**STF**	1111STFnnn"01912245326"	nnn = 001 - 050	n/a	40 - 41
Store a primary telephone no. and divert no's in a single text message	**STN**	1111STNnnn"pn","d1","d2","d3" 1111STNnnn"01912243174", "01912241559"," 01912243678", "01912245326"	nnn = 001 - 050 pn = primary no. d1 = divert 1 no. d2 = divert 2 no. d3 = divert 3 no.	n/a	41
Store a dial to open no. (DTO) **or** Store up to 5 dial to open no's (DTO) in a single text message to the next available locations	**STR**	1111STRnnn"07771234567" 1111STR"n1","n2","n3","n4","n5" 1111STR"01912243174", "01912241559"," 01912243678", "01912245326","07897123456"	nnn = 000 - 999 **or** nnn = optional n1 = 1st DTO n2 = 2nd DTO n3 = 3rd DTO n4 = 4th DTO n5 = 5th DTO	n/a	42 - 43
Delete a dial to open no. without knowing it's location	**DET**	1111DET"01912243174"	n/a	n/a	43
Set call time	**SPT**	1111SPTnn	nn = 01 - 12	02 *(40s)*	43 - 44
Set relay time	**RLT**	1111RLTnn	nn = 00 - 99	05 *(5s)*	44
Set auxiliary AO1 output time	**A1T**	1111A1Tnn	nn = 00 - 99	05 *(5s)*	44
Set auxiliary AO1 out mode	**A1M**	1111A1Mnn	nn = 00 - 05	01	44
Set auxiliary AO2 output time	**A2T**	1111A2Tnn	nn = 00 - 99	05 *(5s)*	45
Keep connection facility	**NOD**	1111NODnn	nn = 01 - 99	0 *(disabled)*	45
Divert to next no. time	**DIT**	1111DITnn	nn = 01 - 99	15 *(15s)*	45
Check GSM signal strength	**SIG**	1111SIG?	n/a	n/a	45
Check software version	**VER**	1111VER?	n/a	n/a	45
Dial a number	**DLE**	1111DLE"123"	n/a	n/a	45 - 46
Store SMS message for g-4	**SMS**	1111SMS"HouseAlarm"	n/a	AUX TRIG	46
Change 4 digit code	**CDE**	1111CDE1234	Any 4 digits	1111	46
Trigger the relay	**RLY**	1111RLY	n/a	n/a	46
Trigger the auxiliary output AO1	**A1O**	1111A1O	n/a	n/a	46
Trigger the auxiliary output AO2	**A2O**	1111A2O	n/a	n/a	46
Store balance check dial string	**SDL**	1111SDL"*#1345#"	n/a	n/a	46
Check credit balance	**BAL**	1111BAL?	n/a	n/a	46 - 47

Store master telephone no.	**STM**	1111STM"07771234567"	n/a	n/a	47
Latch the relay	**RLA**	1111RLA	n/a	n/a	47
Unlatch the relay	**RUL**	1111RUL	n/a	n/a	47
Latch the auxiliary AO1 output	**A1L**	1111A1L	n/a	n/a	47
Unlatch the auxiliary AO1 output	**A1U**	1111A1U	n/a	n/a	47
Latch the auxiliary AO2 output	**A2L**	1111A2L	n/a	n/a	47
Unlatch the auxiliary AO2 output	**A2U**	1111A2U	n/a	n/a	48
Store timeband for call buttons to be active for	**TBA**	1111TBA"HHMMHHMM",days	HHMMHHMM days = Mo, Tu, We, Th, Fr, Sa, Su, AD, WD and WE	00002359 AD (all days)	48
Store timeband(s) for access control: proximity, access codes and dial to open numbers to be active for	**ATB**	1111ATBn"HHMMHHMM",days	n = 0 - 9 HHMMHHMM days = Mo, Tu, We, Th, Fr, Sa, Su, AD, WD and WE	n/a	48 - 49
Store access levels for access control: proximity, access codes and dial to open numbers to be active for	**ACC**	1111ACCn"tttttttttt","rrrrrrrr"	n = 0 - 9 each t = 1 or 0 each r = 1 or 0	n/a	50
Using access levels with dial to open numbers (DTO)	**STR**	1111STR"n1"An,"n2"An,"n3"An,"n4"An,"n5"An	An = A0 - A9 n1 = 1st DTO n2 = 2nd DTO n3 = 3rd DTO n4 = 4th DTO n5 = 5th DTO	n/a	51
Check/Set date & time	**CLK**	1111CLK"yy/mm/dd,hh:mm"?	yy/mm/dd,hh:mm	n/a	51
Input status check and set	**CHK**	1111CHK?	n/a	n/a	51 - 52
Silent dialling mode	**AUE**	1111AUEnn	nn = 00 or 01	01	52
Send tone after answer (But 1)	**DTP**	1111DTPn	n = 0 - 9 or X	X	52
Send tone after answer (Div 1)	**DTD**	1111DTDn	n = 0 - 9 or X	X	52
Send DTMF tone delay	**DTT**	1111DTTnn	nn = 01 - 12	03	52
Enable dial 0 on answer function	**EDZ**	1111EDZnn?	nn = 00 or 01	00	52 - 53
Enable # (hash) function	**ED#**	1111ED#nn?	nn = 00 or 01	00	53
Enable proximity	**EPR**	1111EPRnn?	nn = 00 or 01	00	53
Proximity number of bytes to check	**PBY**	1111PBYnn?	nn = 02, 03 or 04	02	53 - 54
Store a fob/card in a known location **or** the next available location	**FOB**	1111FOBnnn"site","user" or 1111FOB"site","user"	nnn = 000 - 999 **or** nnn - optional	n/a	54
Store a fob/card in a known location **or** the next available location with an access level	**FOB**	1111FOBnnn"site","user"An or 1111FOB"site","user"An	nnn = 000 - 999 **or** nnn - optional An = A0 - A9	An default = all access unless specified	54 - 55
Find a fob or card number	**FDF**	1111FDF"user code"	n/a	n/a	55
Delete a fob or card without knowing its location	**DEF**	1111DEF"12345"	n/a	n/a	55
Store an access code in a known location **or** the next available location and activate relays 1 and/or 2 respectively	**PIN**	1111PINnnn"code"12 or 1111PIN"code"12	nnn = 000 - 399 **or** nnn - optional code = 4 - 8 digit access code 1, 2 = relay to activate	relay setup default = relay 1 unless specified	55 - 56

Store an access code with an access level (including storing in known and next free location & also relay setup)	**PIN**	1111PINnnn"code"An or 1111PIN"code"An also 1111PIN"code"12,An	nnn = 000 - 399 **or** nnn - optional An = A0 - A9 code = 4 - 8 digit access code 1, 2 = relay to activate	An default = all access unless specified, relay setup default = relay 1 unless specified	56 - 57
Store a temporary access code in the next available location, activate relays 1 and/or 2 respectively	**TMP**	1111TMP"code"12,Tnnn	code = 4 - 8 digit access code 1, 2 = relay to activate nnn = 001 - 255hrs	relay setup default = relay 1 unless specified	57
Find an access code	**FDC**	1111FDC"code"?	code = 4 - 8 digit access code	n/a	58
Delete an access code without knowing it's location	**DEC**	1111DEC"code"?	code = 4 - 8 digit access code	n/a	58
Delete all temporary codes	**DEP**	1111DEP?	n/a	n/a	58
Free access timebands including output setup with latch or momentary trigger	**FRE**	1111FREn"HHMMHHMM",days:m:o	n = 0 - 9 HHMMHHMM days = Mo, Tu, We, Th, Fr, Sa, Su, AD, WD and WE m = L or M o = RL, A1 or A2	n/a	58 - 59
Clear all free access timebands	**FRD**	1111FRD?	n/a	n/a	59
Disable (1) or enable (2) speech board	**SBM**	1111SBMnn?	nn = 01 or 02	02	59
Set speech board volume	**SBV**	1111SBVnn?	nn = 00 - 99	75	59
Find a telephone number	**FDT**	1111FDT" number or ends in"	n/a	n/a	50 - 60
End on Last Divert	**EOD**	1111EODnn?	nn = 00 or 01	00	60
Door or Gate	**GAT**	1111GATnn?	nn = 00 or 01	01	60
Shutdown and Restart	**RBT**	1111RBT	n/a	n/a	60
Simulate button press via SMS	**BUT**	1111BUTnn	nn = 01 - 50	n/a	60 - 61
Initiate a special command	**PRG**	1111PRG(command)	AT commands	n/a	61
AT command to send at start up	**AT1**	1111AT1"ATxxxxxx"?	Any AT command	n/a	61
AT command to send at start up	**AT2**	1111AT2"ATxxxxxx"?	Any AT command	n/a	61
AT command to send at start up	**AT3**	1111AT3"ATxxxxxx"?	Any AT command	n/a	61
Enable extended output time	**EXO**	1111EXOnn?	nn = 81 - 87 or 32 disabled	32	61
Obtain the GSM's IMEI number	**IME**	1111IME?	n/a	n/a	62
Unlatch prevention feature	**LLA**	1111LLAnn?	nn = 00 or 01	00	62

OPTIONAL DATA The optional data will vary depending on the command used. It may be a telephone number, a time setting or may not be used at all. For more information refer to the following command settings.

OPTIONAL ? Most of the commands support the ? feature. When this is added to the end of the text message, a confirmation text message will be sent back to the sender indicating the new data has been received and stored.

When sending text messages there may be a delay from when you send the message to when it is received by the GSM PRO depending on how congested the network is. If you are at the intercom panel when sending the message you will hear a single beep from the GSM PRO intercom to indicate it has received the message.

STORING THE CALL BUTTON TELEPHONE NUMBERS (STN, STD, STE AND STF)

Telephone numbers can be stored for the 50 available call buttons. Each call button can call up to four telephone numbers (if the first is busy or not answered in a certain time it can call a 2nd, 3rd and 4th number if the divert facility is setup). The STN code stores the first number called (primary telephone number) when the button is pressed. The STD, STE and STF codes stores the diverted telephone numbers if the first is busy or not answered (the GSM PRO intercom will divert to the 2nd number then divert to the 3rd number and finally the 4th number). The messages to store/check numbers are as follows (replace STN with STD, STE or STF when storing/checking divert numbers).

1111STNnnn"yyyyyyyyyyy"	Store the primary telephone number yyyyyyyyyyy in position nnn.
1111STNnnn"yyyyyyyyyyy"?	Store the telephone number yyyyyyyyyy in position nnn and send a confirmation text message to confirm storage of new number.
1111STNnnn?	Query the telephone number stored in location nnn. A text message will be sent to the sender with the stored number for that location.
1111STNnnn""	Delete the telephone number stored in location nnn.
1111STNnnn""?	Delete the telephone number stored in location nnn. A text message will be sent to the sender with the delete confirmation for that location.

nnn is a button number between 001 & 050. The telephone number y can be a maximum of 30 digits. For example: to store the number 01912243174 for button 5 and three divert numbers (if that one is not answered or busy) of 01912241558, 07771234567 and 01912241559 respectively, the following SMS messages would be sent to the GSM intercom:

1111STN005"01912243174"

1111STD005"01912241558"

1111STE005"07771234567"

1111STF005"01912241559"

<u>IMPORTANT NOTE:</u> When sending the command 1111STNnnn? to query the telephone number stored for the call button the GSM PRO will reply with the list of all the numbers stored for that call button i.e. the primary number and the 3 divert numbers as shown in the example below *.

When sending the command 1111STDnnn? , 1111STEnnn? or 1111STFnnn? to query the individual divert numbers stored for the call button the GSM PRO will reply with only the divert number stored for the call button, e.g. for call button 1 with divert 2 number as 07771234567 the command sent to the GSM PRO would be: 1111STE001? . The GSM PRO would reply with:

MEM (DIVERT 2)
001 = 0771234567
OK VIDEX GSM

STORING THE PRIMARY AND DIVERT NUMBERS IN A SINGLE TEXT MESSAGE (USING STN)

It is also possible to program a primary telephone number and three divert numbers for a particular call button in a single text message instead of using the individual programming codes STD (1st divert), STE (2nd divert) and STF (3rd divert). Expanding on the STN programming command the text messages used to store/check the primary number and divert numbers are as follows.

1111STNnnn"pn" (or 1111STNnnn"yyyyyyyyyyy") **1111STNnnn"pn","d1"** **1111STNnnn"pn","d1","d2"** **1111STNnnn"pn","d1","d2","d3"**	Store the primary number and respective divert numbers in position nnn, (where pn = primary number, d1= 1st divert, d2 = 2nd divert, d3 = 3rd divert and nnn = call button 001 - 050).
1111STNnnn"pn"? (or 1111STNnnn"yyyyyyyyyyy"?) **1111STNnnn"pn","d1"?** **1111STNnnn"pn","d1","d2"?** **1111STNnnn"pn","d1","d2","d3"?**	Store the primary number and respective divert numbers in position nnn, (where pn = primary number, d1= 1st divert, d2 = 2nd divert, d3 = 3rd divert and nnn = call button 001 - 050), also send confirmation of stored numbers for that location.

Using the same telephone numbers from the previous example: to store the primary number 01912243174 (pn) for button 5 and three divert numbers of 01912241558 (d1), 07771234567 (d2) and 01912241559 (d3) respectively, the following single text message would be sent to the GSM intercom instead of sending 4 individual text messages:

1111STN005"01912243174","01912241558","07771234567","01912241559"

Similarly if only the primary number (pn) and 1st divert number (d1) were only required for button 5 the following message would be sent:

1111STN005"01912243174","01912241558"

Remember an optional **?** can be included at the end of the message to receive confirmation of the stored numbers, like so:

1111STN005"01912243174","01912241558","07771234567","01912241559"?

* The following reply will be received from the GSM PRO:

MEM 005 = 01912243174
MEM (DIVERT 1) 005 = 01912241558
MEM (DIVERT 2) 005 = 07771234567
MEM (DIVERT 3) 005 = 01912241559
OK VIDEX GSM

Remember to include " and **,** where appropriate.

STORING A DIAL TO OPEN NUMBER (STR)

Dial in door release allows users to release the door/gate simply by dialling the telephone number of the SIM in the GSM PRO intercom panel. The intercom panel will check the callers ID when it receives a call and if it matches the list of stored numbers, it will clear the call down (avoiding the caller being charged for the call) and will activate the relay for the programmed time. Up to 1000 numbers can be stored (000 - 999). The messages to check, store or delete numbers are as follows.

1111STRnnn"yyyyyyyyyyy"	Store the telephone number yyyyyyyyyyy in position nnn, where nnn = 000 - 999.
1111STRnnn"yyyyyyyyyyy"?	Store the telephone number yyyyyyyyyyy in position nnn, where nnn = 000 - 999, and send a confirmation text message to confirm storage of new number.
1111STRnnn?	Query the telephone number stored in location nnn, where nnn = 000 - 999. A text message will be sent to the sender with the stored number for that location.
1111STRnnn""	Delete the telephone number stored in location nnn, where nnn = 000 - 999.
1111STRnnn""?	Delete and confirm deletion of a telephone number in location nnn, where nnn = 000 - 999.

IMPORTANT NOTE: It is important to switch OFF voicemail and automatic SMS features on the SIM card in the GSM intercom when using this feature (see the 'Forced Dial' section for more details). Also note that it will not be possible to use the dial in to speak facility from a number stored to release the door/gate when dialling in (door release takes priority).

Please also note it is important that the number stored, when dialling in to release the door/gate, must have any "caller ID" or "withhold or witheld number" function switched OFF on the telephone/mobile that is making the call to the GSM intercom. If this feature is not switched OFF the GSM intercom will not recognise the caller's number and no further action will take place.

STORING UP TO 5 DIAL TO OPEN NUMBERS IN A SINGLE TEXT MESSAGE TO THE NEXT AVAILABLE LOCATIONS (STR)

It is also possible to program up to a maximum of 5 dial to open numbers (DTO) at a time to the next available memory locations and in a single text message instead of programming them individually. Expanding on the existing STR programming command the text messages used to store/check the dial to open numbers are as follows.

1111STR"n1" **1111STR"n1","n2"** **1111STR"n1","n2","n3"** **1111STR"n1","n2","n3","n4"** **1111STR"n1","n2","n3","n4","n5"**	Store the dial to open numbers (DTO) to the next available memory location(s), where n1 = 1st DTO number, n2 = 2nd DTO number, n3 = 3rd DTO number, n4 = 4th DTO number, n5 = 5th DTO number.
1111STR"n1" ? **1111STR"n1","n2"?** **1111STR"n1","n2","n3"?** **1111STR"n1","n2","n3","n4"?** **1111STR"n1","n2","n3","n4","n5"?**	Store the dial to open numbers (DTO) to the next available memory location(s), where n1 = 1st DTO number, n2 = 2nd DTO number, n3 = 3rd DTO number, n4 = 4th DTO number, n5 = 5th DTO number, also send confirmation text of DTO numbers and locations of where they are stored.

For example to store the following 5 dial to open numbers (DTO): 01912243174 (n1), 01912241558 (n2), 07771234567 (n3), 01912241559 (n4) and 07897123456 (n5) respectively to start from the next available memory location, the following single text message would be sent to the GSM intercom instead of sending 5 individual text messages:

1111STR"01912243174","01912241558","07771234567","01912241559","07897123456"

Similarly if only 3 dial to open numbers (DTO) n1, n2 and n3 were required, the following message would be sent:

1111STR"01912243174","01912241558","07771234567"

Remember an optional **?** can be included at the end of the message to receive confirmation of the stored numbers, like so:

1111STR"01912243174","01912241558","07771234567","01912241559","07897123456"?

The following reply will be received from the GSM PRO:

MEM OPEN 003 = 01912243174
MEM OPEN 004 = 01912241558
MEM OPEN 005 = 07771234567
MEM OPEN 006 = 01912241559
MEM OPEN 007 = 07897123456
OK VIDEX GSM

Remember to include **"** and **,** where appropriate. In the example above if locations 001 and 002 already had numbers programmed then the dial to open numbers (DTO) n1, n2, n3, n4 and n5 would be stored in the GSM PRO starting from location 003 up to 007.

IMPORTANT NOTE: It should be noted that when programming multiple dial to open numbers (DTO) using this command the GSM PRO starts checking for free memory locations from 001 to see if there is enough available space to store them. So if the

number of DTO numbers being programmed is greater than the number of available locations the GSM PRO will skip to find the next available location that has enough space to store the numbers.

For example: the DTO locations from 001 to 003 and locations from 006 to 008 may be occupied with DTO numbers, location 004, location 005 are available and locations from 009 onwards are available (refer to table on the right). If the intention is to store three DTO numbers: 01912243174 (n1), 01912241558 (n2), 07771234567 (n3). The following text message would be sent to the GSM PRO:

1111STR" 01912243174"," 01912241558"," 07771234567"?

The GSM PRO will reply with the following text:

MEM OPEN 009 = 01912243174
MEM OPEN 010 = 01912241558
MEM OPEN 011 = 07771234567
OK VIDEX GSM

DTO location	Location status (free/occupied)
001	**occupied location**
002	**occupied location**
003	**occupied location**
004	*free location*
005	*free location*
006	**occupied location**
007	**occupied location**
008	**occupied location**
009	*free location*
010	*free location*
011	*free location*

In the example above although the DTO locations 004 and 005 are available the programming command sent to the GSM PRO is to store three DTO numbers. As the quantity of DTO numbers to be stored is greater than the number of memory locations available from location 004 the GSM PRO will look for the next set of free locations that is able to accommodate the three DTO numbers. So in this case the GSM PRO will bypass locations 004 and 005 as there isn't sufficient space to store the three DTO numbers, it will also bypass locations 006, 007 and 008 as these locations are already occupied. However the locations from 009 onwards are free to use so the GSM PRO will store the first DTO number (n1) in location 009 and then the next DTO number (n2) in location 010 and so on.

IMPORTANT NOTE: It is also possible that when storing multiple DTO numbers using the STR code a start location, nnn, can be included in the programming command i.e. 1111STRnnn"n1","n2","n3","n4","n5". However when a start location is included, while the GSM PRO will store the DTO numbers from this location, any memory location after it that already has a DTO number stored will be overwritten with the new DTO number.

Using the same details from the previous example: The DTO locations from 001 to 003 and 006 to 008 are already occupied with DTO numbers, location 004 and 005 are available. Locations from 009 onwards are also available (refer to previous table). If the intention is to store the following three DTO numbers: 01912243174 (n1), 01912241558 (n2), 07771234567 (n3) starting from location 004. The following text message would be sent to the GSM PRO:

1111STR004"01912243174","01912241558","07771234567"?

The GSM PRO will reply with the following text:

MEM OPEN 004 = 01912243174
MEM OPEN 005 = 01912241558
MEM OPEN 006 = 07771234567
OK VIDEX GSM

In this example the 1st and 2nd DTO numbers 01912243174 (n1) and 01912241558 (n2) would be stored in the available locations 004 and 005 as expected, however the 3rd DTO number 07771234567 (n3) would overwrite the number that was already stored in location 006.

DELETE A DIAL TO OPEN NUMBER WITHOUT KNOWING IT'S LOCATION (DET)

Although a dial to open number (DTO) can be deleted from the GSM PRO using the programming command **1111STRnnn""?** , it is also possible to delete a dial to open number if the location is not known. The following messages can be used to delete and confirm a dial to open number has been deleted from the GSM PRO.

1111DET"yyyyyyyyyyy"	Delete the dial to open number yyyyyyyyyyy (where yyyyyyyyyyy DTO number).
1111DET"yyyyyyyyyyy"?	Delete the dial to open number yyyyyyyyyyy (where yyyyyyyyyyy DTO number). Also send a confirmation text back to the sender.

Note that when using this command the full telephone number **will be required** otherwise the GSM PRO will respond with:

NOT FOUND
OK VIDEX GSM

SET CALL TIME (SPT)

The call time is the maximum time in seconds that a call will last before the GSM PRO intercom automatically clears the call down. The time can be set from 20 seconds up to 240 seconds (4 minutes) and begins from when the call button is first pressed. The default time is set to 40 seconds. The following messages can be used to set/check the maximum call time.

1111SPTnn	Store the time nn x 20 seconds (e.g. nn = 03, time = 60 seconds).

1111SPTnn?	Store the time nn x 20 seconds (e.g. nn = 02, time = 40 seconds, refer to table below), also send a confirmation text back to the sender.
1111SPT?	Query the current stored time. A text message will be sent back to the sender showing the stored time (remember to multiply the number in the received text by 20 seconds).

nn multiplier:	nn = 01, time = 20 secs	nn = 02, time = 40 secs	nn = 03, time = 60 secs
	nn = 04, time = 80 secs	nn = 05, time = 100 secs	nn = 06, time = 120 secs
	nn = 07, time = 140 secs	nn = 08, time = 160 secs	nn = 09, time = 180 secs
	nn = 10, time = 200 secs	nn = 11, time = 220 secs	nn = 12, time = 240 secs

SET RELAY TIME (RLT)

The relay time can be from 01 – 99 seconds or latching (set the relay time to 00 for latched mode. In latch mode, the relay will stay energised until the command is sent again).

1111RLTnn	Store the relay time nn = time in seconds (e.g. nn = 05, time = 5 seconds).
1111RLTnn?	Store the relay time nn = time in seconds. Also send a confirmation text back to the sender.
1111RLT?	Query the current stored relay time. A text message will be sent back to the sender showing the stored relay time.

SET AUXILIARY OUTPUT AO1 TIME (A1T, FOR A1M = 01 ONLY)

The auxiliary output AO1 time can be set from 01 - 99 seconds or latching (set the AO1 output time to 00 for latched mode. In latch mode the AO1 output will stay triggered until the relevant command is sent again to unlatch the AO1 output. This option is only available when the AO1 output mode, **A1M**, is set to mode 01. Please refer to the **A1M** commands below for more details).

1111A1Tnn	Store the AO1 time nn = time in seconds (e.g. nn = 05, time = 5 seconds).
1111A1Tnn?	Store the AO1 time nn = time in seconds. Also send a confirmation text back to the sender.
1111A1T?	Query the current stored AO1 time. A text message will be sent back to the sender showing the stored AO1 time.

SET AUXILIARY OUTPUT AO1 MODE (A1M, MODES 00 - 05)

The auxiliary output AO1 has up to six modes that can be set:

Call Activated: nn = 00

AO1 output will activate when a call begins and deactivate when a call ends. See example, **Fig.30**, on page 23.

User Activated: nn = 01

To activate the AO1 output either short terminals g to 5 (auxiliary 1 input) on the GSM PRO intercom or press 6 on the telephone during a call. See example, **Fig.31**, on page 23.

Used for Status Indication: nn = 02

When in this mode, the AO1 terminal is used exclusively for monitoring the status of an input. For example, checking if a gate/door is open or closed. See example, **Fig.32**, on page 24.

Divert Calls to Master Number: nn = 03

When in this mode, the AO1 terminal is used exclusively for monitoring the status of a switched input to decide if calls should be diverted to the master number or not. See example, **Fig.33**, on page 24.

Call Activate (Timed): nn = 04

AO1 output will activate when a call begins and deactivate when the auxiliary 1 output time (**A1T**) expires. See example, **Fig.34**, on page 25.

Enable/Disable "Dial to Open": nn = 05

When in this mode, the AO1 terminal is used to enable/disable the dial to open feature via an external C/NO switched input across terminals AO1 & g, (for example the C/NO relay contacts on a timeclock could be connected across terminals AO1 & g on the GSM PRO intercom. When the timeclock relay is ON then no dial to open numbers are allowed. The GSM PRO answers the call and awaits the master code to be entered. When the timeclock relay is OFF all dial to open numbers will operate as normal). See example, **Fig.35**, on page 25.

1111A1Mnn	Store the AO1 mode nn = 00 - 05.
1111A1Mnn?	Store the AO1 mode nn = 00 - 05. Also send a confirmation text back to the sender.
1111A1M?	Query the current stored AO1 mode. A text message will be sent back to the sender showing the stored A1O mode.

SET AUXILIARY OUTPUT AO2 TIME (A2T)

The auxiliary output AO2 time can be set from 01 - 99 seconds or latching (set the AO2 output time to 00 for latched mode. In latch mode the AO2 output will stay triggered until the relevant command is sent again to unlatch the AO2 output).

1111A2Tnn	Store the AO2 time nn = time in seconds (e.g. nn = 05, time = 5 seconds).
1111A2Tnn?	Store the AO2 time nn = time in seconds. Also send a confirmation text back to the sender.
1111A2T?	Query the current stored AO2 time. A text message will be sent back to the sender showing the stored AO2 time.

SET DAYS TO WAIT BEFORE MAKING A CALL (NOD)

In the event the GSM PRO intercom panel is not used for long periods of time it could be possible that the network disconnects it. To prevent this from happening it is possible to program a time period (from 01 – 99 days or disabled 00) to wait before the intercom panel makes a short call to refresh the connection to the network. This time period is reset after each call made on the system and will only happen if the full time period elapses without any incoming or outgoing calls.

1111NODnn	Store the time nn = time in days (e.g. nn = 07, time = 7 days).
1111NODnn?	Store the time nn = time in days. Also send a confirmation text back to the sender.
1111NOD?	Query the current stored time. A text message will be sent back to the sender showing the stored time.

DIVERT TIME (DIT)

The divert time is the number of seconds to wait for a call to be answered before diverting to the 2nd, 3rd and 4th number. The default time is 15 seconds (the count down begins from when the call button is pressed, but is refreshed when the telephone begins to ring) and can be set from 01 – 99 seconds.

1111DITnn	Store the divert time nn = time in seconds (e.g. nn = 15, time = 15 seconds).
1111DITnn?	Store the divert time nn = time in seconds. Also send a confirmation text back to the sender.
1111DIT?	Query the current stored divert time. A text message will be sent back to the sender showing the stored divert time.

CHECK SIGNAL STRENGTH (SIG)

At any time the signal strength of the GSM PRO can be checked (also see notes **understanding the signal strength** on page 69). It is advisable that when the GSM PRO is first setup and before any other programming is carried out to check the signal strength of the GSM PRO intercom. If the signal strength is too low the GSM PRO intercom may not operate properly and therefore the GSM antenna will need to be repositioned to increase the signal strength. Use the following command to check the signal strength.

1111SIG?	Check the signal strength of the GSM PRO intercom and send a confirmation text back to the sender.

CHECK SOFTWARE VERSION (VER)

It is possible to check the current version of software on the GSM PRO intercom. This may be necessary to see if an update is required for any additional features or updates on the GSM PRO intercom which may be included on later versions. Use the following command to check the software version.

1111VER?	Check the software version of the GSM PRO intercom and send a confirmation text back to the sender.

FORCED DIAL/DIAL A NUMBER (DLE)

A useful feature of the GSM PRO intercom is its ability to call a number sent to it in a text message. This feature can be used when setting up the SIM card. For example, disabling the voicemail facility or disabling automatic SMS messages or missed calls. Any number up to 15 digits can be called and the call will last for a maximum of 40 seconds. The example below would switch OFF voicemail on a Vodafone SIM card. Substitute the Vodafone number for other service providers.

1111DLE"1210"	Dial 1210 for the intercom panel.

Other useful numbers which can be used with this feature are as follows. Please also check the network service provider's web sites for other useful codes.

	Vodafone	**O²**
DISABLE VOICEMAIL	1210	1760
DISABLE TEXT ALERTS	#148#	1760

Programming the GSM Intercom

IMPORTANT NOTE: Disabling voicemail and text alerts is very important as there is no way to retrieve either of these services from a GSM intercom panel. Disabling these features will also prevent the intercom panel switching to voicemail or sending a text when dialling in from another phone.

STORE SMS AUXILIARY MESSAGE (SMS, WHEN AUXILIARY INPUT 2 IS TRIGGERED)

When terminals g & 4 (auxiliary input 2) are triggered on the GSM PRO intercom, a text message will be sent to the master telephone number. The text message can be customised using the following command.

1111SMS"HouseAlarm"	Change SMS message to HouseAlarm.

Please also note that the message can be a maximum of 32 characters long and cannot include spaces or " as part of the message. See an example of this feature, **Fig.37**, on page 26.

CHANGE THE FOUR DIGIT CODE (CDE)

The four digit code can be any combination of numbers between 0-9 but must be 4 digits long. The code allows access to the programming menu in dial in mode and must be used when sending text messages to the GSM intercom panel. Use the following message to change the code.

1111CDEnnnn	Change the 4 digit code to nnnn (where nnnn = new 4 digit code).

TRIGGER THE RELAY (RLY)

There are several ways to trigger the GSM PRO relay. The first is to press button 3 on the telephone during a call and the relay will operate for the programmed time. Another way is to send the following text message.

1111RLY	Operate the GSM relay (for the programmed time).
1111RLY?	Operate the GSM relay (for the programmed time) and send a confirmation text back to the sender.

TRIGGER AUXILIARY OUTPUT AO1 (A1O)

It is possible to trigger the auxiliary output AO1 for the programmed AO1 output time (please note that this method of triggering auxiliary output AO1 is only possible when the **A1M** mode has been set to mode 01: user activated, also refer to notes on page 44 and the example on page 23, **Fig.31**). This can be done by shorting terminals g & 5 on the GSM PRO intercom, pressing button 6 on the telephone during a call or by sending the following message to the GSM intercom.

1111A1O	Trigger auxiliary output AO1 (for the programmed time).
1111A1O?	Trigger auxiliary output AO1 (for the programmed time) and send a confirmation text back to the sender.

TRIGGER AUXILIARY OUTPUT AO2 (A2O)

It is possible to trigger the auxiliary output AO2 for the programmed AO2 output time (refer to page 26, **Fig.36**). This can be done by sending the following message to the GSM intercom.

1111A2O	Trigger auxiliary output AO2 (for the programmed time).
1111A2O?	Trigger auxiliary output AO2 (for the programmed time) and send a confirmation text back to the sender.

STORE BALANCE CHECK DIAL STRING (SDL)

Several network providers offer the facility to check available balance on their pay as you go tariffs. For example, on Vodafone the string is ***#1345#** and on O2 the string is ***#10#**. Other networks may also have this feature. Because the intercom will not know the details of the network provider's SIM card which you have inserted it will be necessary to store the correct string in order to use the credit balance check features.

1111SDL"*#1345#"	Store the balance check string for a Vodafone pay as you go.
1111SDL"*#10#"	Store the balance check string for an O^2 pay as you go.

IMPORTANT NOTE: Videx are only aware of the balance check dial string codes for the network providers mentioned above. Check dial string codes for other networks are currently unavailable at this time. Please also note that this programming function is only applicable for pay as you go SIM cards.

CHECK CREDIT BALANCE (BAL)

The balance can only be checked if the correct balance check string has previously been stored using the **SDL** code explained above. At any point the user will be able to send the following text message and the GSM PRO intercom will reply with the current balance stored on the SIM card.

1111BAL?	Check current balance of the SIM in the GSM PRO intercom and send a confirmation text back to the sender.

In addition to this feature the GSM PRO intercom also has the facility to monitor the available credit and then text the user to inform them when the credit has fallen below £5.00, €5.00 or $5.00. It will then remind the user with another text after every 5 calls until the credit has either increased or if it runs out.

To use this feature, the following settings must first be made:

A Pay As You Go SIM card from a provider that offers this service (Vodafone, O2) must be used.

The correct balance check string must be stored using the **SDL** code (see store balance check dial string).

A mobile phone number that is to receive the 'balance low' text must be stored in the master telephone number location using the STM code (refer to 'store master telephone number' feature below).

STORE THE MASTER TELEPHONE NUMBER (STM)

The master telephone number is the number which will receive automatic balance updates when the balance gets low (if this feature is setup) and will receive the SMS message if auxiliary input 2 is triggered (also refer to example on page 26, **Fig.37**). To store a master telephone number the following programming texts can be sent to the GSM PRO intercom.

1111STM"yyyyyyyyyyy"	Store the telephone number yyyyyyyyyyy.
1111STM"yyyyyyyyyyy"?	Store the telephone number yyyyyyyyyyy and send a confirmation text back to the sender.
1111STM?	Query the master telephone number stored. A text message will be sent to the sender with the stored number for that location.
1111STM""	Delete the master telephone number stored.
1111STM""?	Delete the master telephone number stored and send a confirmation text back to the sender.

LATCH THE RELAY (RLA)

It is possible to latch the GSM PRO intercom relay closed. This function is particularly useful if the GSM PRO intercom relay is connected to a gate controller and the user wishes to 'hold open' the gate. The following text message can be sent to the GSM PRO intercom.

1111RLA	Latch the GSM PRO relay to the C/NO position.
1111RLA?	Latch the GSM PRO relay to the C/NO position and send a confirmation text back to the sender.

UNLATCH THE RELAY (RUL)

If the GSM PRO intercom relay has been latched it is possible to unlatch the relay with the following text message.

1111RUL	Unlatch the GSM PRO relay back to the C/NC position.
1111RUL?	Latch the GSM PRO relay to the C/NC position and send a confirmation text back to the sender.

IMPORTANT NOTE: The GSM PRO intercom relay can also be unlatched by pressing 3 on the telephone during a call.

LATCH AUXILIARY OUTPUT AO1 (A1L)

Auxiliary output AO1, like the onboard relay, can be latched. To latch auxiliary output AO1 the following text message can be sent to the GSM PRO intercom.

1111A1L	Latch auxiliary output AO1.
1111A1L?	Latch auxiliary output AO1 and send a confirmation text back to the sender.

UNLATCH AUXILIARY OUTPUT AO1 (A1U)

Auxiliary output AO1 can also be unlatched. To unlatch auxiliary output AO1 the following text message can be sent to the GSM PRO intercom.

1111A1U	Unlatch auxiliary output AO1.
1111A1U?	Unlatch auxiliary output AO1 and send a confirmation text back to the sender.

LATCH AUXILIARY OUTPUT AO2 (A2L)

Auxiliary output AO2, like auxiliary output AO1, can be latched. To latch auxiliary output AO2 the following text message can be sent to the GSM PRO intercom.

1111A2L	Latch auxiliary output AO2.
1111A2L?	Latch auxiliary output AO2 and send a confirmation text back to the sender.

UNLATCH AUXILIARY OUTPUT AO2 (A2U)

Auxiliary output AO2 can also be unlatched. To unlatch auxiliary output AO2 the following text message can be sent to the GSM PRO intercom.

1111A2U	Unlatch auxiliary output AO2.
1111A2U?	Unlatch auxiliary output AO2 and send a confirmation text back to the sender.

STORE TIMEBAND FOR CALLS TO BE ACTIVE FOR (TBA)

IMPORTANT NOTE: This feature relies on the network providers time zone setting and also if they support NITZ (Network Identity and Time Zone). First check the time/date is correct by sending the SMS message 1111CLK? (also refer to check intercoms time & date feature below). If the time/date returned is incorrect, it maybe that they do not support it. The clock can be set manually but any power cut will result in the time and date being lost unless battery backup is included.

The timeband feature allows the call buttons to be disabled or diverted to the master telephone number outside a certain time window. For example, if the timeband is set from 6:00am to 11:30pm then the user will only receive calls between the hours of 06:00 in the morning until 23:30 at night. Remember to always use the 24hr clock and also ensure the start time is earlier than the stop time. The timeband can also be set for a specific day or days of the week to be active for by adding the day or days to the end of the programming command, see table below for the codes used for the days required.

Days				
Mo = Monday	**Tu** = Tuesday	**We** = Wednesday	**Th** = Thursday	**Fr** = Friday
Sa = Saturday	**Su** = Sunday	**AD** = All days	**WD** = Week days only	**WE** = Weekends only

When including the day or days in the command they must be separated using a comma **,** between the codes required, also refer to the examples below. Use the following text messages to store, query and delete the timeband.

1111TBA"HHMMHHMM",days	Store the time using this format. The first HHMM is the **start** time to receive calls (i.e. 0600 for 6am in the morning) and the second HHMM is the time to **stop** receiving calls (i.e. 2330 for 11:30pm at night) and where days = Mo, Tu, We, Th, Fri, Sa, Su, AD, WD, WE.
1111TBA"HHMMHHMM",days?	As above but also send a confirmation text back to the sender with the stored setting.
1111TBA?	Query timeband setting. A text message will be sent to the sender with the stored time band and days active for.
1111TBA""	Delete the timeband and allow calls to be received at any time.
1111TBA""?	Delete and confirm deletion of the timeband.

Example 1: To set a timeband where the calls are to be received on all days of the week from 8:00am in the morning up until 5:00pm in the evening where they would finish, the following text can be sent to the GSM PRO intercom, remembering to use 24hr clock notation:

1111TBA"08001700",AD?

The GSM PRO intercom will reply with the following text:

TB = 08001700,Su,Mo,Tu,We,Th,Fr,Sa
OK VIDEX GSM

Example 2: To set a timeband where calls are to be received on Mondays, Tuesdays and Fridays only, from 10:00am until 3:30pm, the following text can be sent to the GSM PRO intercom:

1111TBA"10001530",Mo,Tu,Fr?

Note that commas **,** are used where appropriate to separate the days required for the timeband. The GSM PRO intercom will reply with the following text:

TB = 10001530,Mo,Tu,Fr
OK VIDEX GSM

Note that in both examples shown the confirmation text message from the GSM PRO will include the day or days of the week shown after the timeband period.

STORE TIMEBAND FOR ACCESS CONTROL: PROXIMITY, ACCESS CODES & DIAL TO OPEN TO BE ACTIVE FOR (ATB)

This function together with the access levels feature (**ACC**), described further on, allows the additional access control features, i.e. proximity fobs/cards (000 - 999) and coded access features (codes 000 - 399 and temp codes 00 - 31) of the GSM PRO and also the dial to open numbers (**DTO**) to be programmed with up to 10 access control timebands (0 - 9). Whether using the built-in proximity reader on its own or a combination of the off board proximity readers (Art.4850R) and keypads (Art.4903) the access control timebands can be used to manage access rights (i.e. when fobs/cards or access codes can be active for on the proximity readers or keypads) for the different devices at various times. In the case of dial to open (**DTO**) numbers the timebands feature enables and disables when the dial to open numbers can be used.

Programming the GSM Intercom

Like the TBA timeband feature the **start** and **end** times for the timebands used in the programming command must use 24hr clock notation. For example, if timeband 0 is set from 8:45am to 7:30pm then the user(s) will only be able to use their fobs/cards, access code(s) and dial to open numbers between the hours of 08:45 in the morning until 19:30 in the evening. Also the timebands can be set for a specific day or days of the week to be active for by adding the day or days to the end of the programming command, see table on page 48 for the codes used for the days required.

When including the day or days in the command they must be separated using a comma **,** between the codes required, also refer to the following examples. Use the following text messages to store, query and delete the timebands.

1111ATBn"HHMMHHMM",days	Store the time period for timeband n, where n = timeband no. (0 - 9) using this format: the first HHMM is the **start** time for fobs/cards and access codes to be active (i.e. 0845 for 8:45am in the morning) and the second HHMM is the **end** time when fobs/cards and access codes will stop being active (i.e. 1930 for 7:30pm at night) and where days = Mo, Tu, We, Th, Fri, Sa, Su, AD, WD, WE.
1111ATBn"HHMMHHMM",days?	As above but also send a confirmation text back to the sender with the stored setting.
1111ATBn?	Query timeband n setting, where n = timeband no. (0 - 9) A text message will be sent to the sender with the stored timeband no., time period and days active for.
1111ATBn""	Delete timeband n, where n = timeband no. (0 - 9).
1111ATBn""?	Delete and confirm deletion of the timeband.

Example 1: To set timeband 0 to allow for proximity fobs/cards, access codes and dial to open numbers to be active between 8:00am in the morning up until 2:00pm in the afternoon and for weekends only, the following text can be sent to the GSM PRO intercom, remembering to use 24hr clock notation:

1111ATB0"08001400",WE?

The GSM PRO intercom will reply with the following text:

ATB0 = 08001400,Su,Sa
OK VIDEX GSM

Example 2: To set timeband 1 to allow for proximity fobs/cards, access codes and dial to open numbers to be active between 2:00pm in the afternoon until 3:00pm in the afternoon and for Mondays, Wednesdays and Fridays only, the following text can be sent to the GSM PRO intercom, remembering to use 24hr clock notation:

1111ATB1"14001500",Mo,We,Fr?

Note that commas **,** are used where appropriate to separate the days required for the timeband. The GSM PRO intercom will reply with the following text:

ATB1 = 14001500,Mo,We,Fr
OK VIDEX GSM

Note that in both examples shown the confirmation text message from the GSM PRO will include the day or days of the week shown after the timeband period.

IMPORTANT NOTE: When using the Art.4903 keypad the ATB timebands feature only applies to the additional 400 (000 - 399) access codes and 32 (400 - 431) temporary codes. Any codes programmed for relays 1 and 2 directly via the keypad will work as normal and are not affected by the timebands. It should also be noted that the ATB timebands feature cannot be used alone it must also be used in conjunction with the access levels feature ACC described on the following page.

STORE ACCESS LEVELS FOR ACCESS CONTROL: PROXIMITY & ACCESS CODES TO BE ACTIVE FOR (ACC)

The access levels feature (**ACC**) allows the 10 access control timebands (**ATB**) to be assigned to one of or a combination of up to 10 access levels (0 - 9). Each of the access levels can also have proximity readers (Art.4850R), including the GSM PRO's onboard reader, or keypads (Art.4903) or a combination of both assigned to them aswell by using the readers/keypads unit ID (1 - 8). In short access levels are made up of both timebands and reader groups where reader groups are made up of a combination of proximity readers and keypads, see **Fig.84**.

This feature of the GSM PRO intercom is particularly useful on systems where restricted access is required where users may only be allowed access through different readers/keypads and at different times of the day.

Before setting up an access level it is recommended that any timebands that may be required are setup first following the access control timebands programming command **ATB** described on the previous page.

Use the following text messages shown in the table below to store, query and delete an access level.

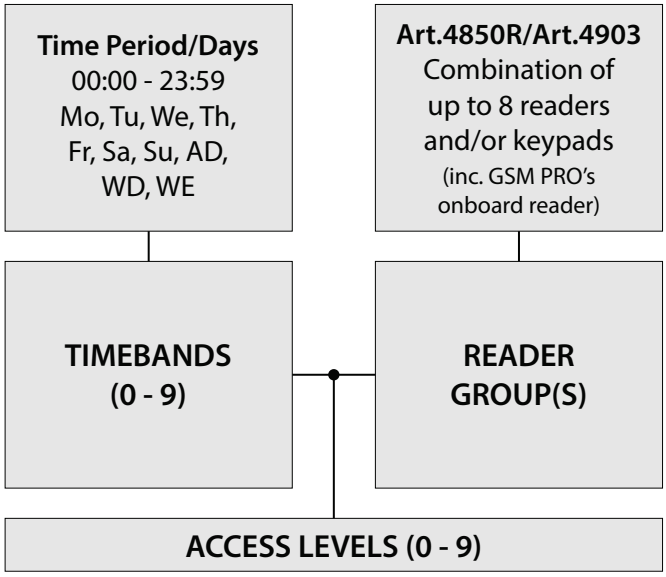

Fig. 84

1111ACCn"tttttttttt","rrrrrrrr"	Assign the timebands tttttttttt and the readers/keypads rrrrrrrr to access level n, where n = access level no. 0 - 9, each of the timebands tttttttttt = 1 or 0 (where 1 = timeband assigned and 0 = timeband not assigned) and each of the readers/keypads rrrrrrrr = 1 or 0 (where 1 = reader/keypad assigned and 0 = reader/keypad not assigned), also refer to the **ACC** command string shown in **Fig.85**.
1111ACCn"tttttttttt","rrrrrrrr"?	As above but also send a confirmation text back to the sender with the stored setting.
1111ACCn?	Query access level n, where n = access level no. 0 - 9 and send confirmation text back to sender with stored access level settings.
1111ACCn""	Delete access level n, where n = access level no. 0 - 9.
1111ACCn""?	As above but also send a confirmation text back to the sender confirming access level deleted.

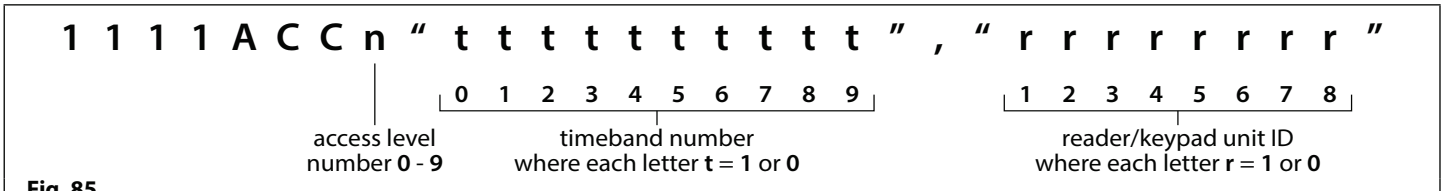

Fig. 85

Example: Following the format of the **ACC** command string shown in **Fig.85** the access level **n** represents the access level number from **0** - **9**, e.g. if access level **8** is being programmed then **n** = **8** in the command string.

Each letter **t** in the command string represents which timeband(s) will be assigned to the access level and would be shown with the value of **1** (assigned) or **0** (not assigned), e.g. if the timebands **0**, **2**, **4**, **6** and **8** were to be assigned to the access level then **"tttttttttt"** would be shown as **"1010101010"** in the command string.

Similarly each letter **r** in the command string represents which readers/keypads will be assigned to the access level and would be shown with the value of **1** (assigned) or **0** (not assigned), e.g. if the following readers/keypads **1**, **2**, **5** and **6** were to be assigned to the access level then **"rrrrrrrr"** would be shown as **"11001100"** in the command string.

The following text can then be sent to the GSM PRO intercom to program an access level:

1111ACC8"1010101010","11001100"?

Including a **?** at the end of the command the GSM PRO intercom will reply with the following text:

AL8 = "1010101010","11001100"
OK VIDEX GSM

Remember that each timeband would be programmed using the store timeband command **ATB** (see pages 48 - 49).

USING ACCESS LEVELS WITH DIAL TO OPEN NUMBERS (STR)

It is also possible to assign access levels to dial to open numbers using the STR programming command (also refer to STR programming described on pages 42 and 43). An access level can be assigned to a single DTO number or to each individual DTO number when programming multiple DTO numbers in a single text.

Following the format of the STR programming command the following text messages can be used to store dial to open numbers with access levels assigned to them and store them in the next available memory locations.

1111STR"n1"An **1111STR"n1"An,"n2"An** **1111STR"n1"An,"n2"An,"n3"An** **1111STR"n1"An,"n2"An,"n3"An,"n4"An** **1111STR"n1"An,"n2"An,"n3"An,"n4"An,"n5"An**	Store the dial to open number(s) DTO to the next available memory location(s), where n1 = 1st DTO number, n2 = 2nd DTO number, n3 = 3rd DTO number, n4 = 4th DTO number, n5 = 5th DTO number and assign an access level where An = A0 - A9.
1111STR"n1"An? **1111STR"n1"An,"n2"An?** **1111STR"n1"An,"n2"An,"n3"An?** **1111STR"n1"An,"n2"An,"n3"An,"n4"An?** **1111STR"n1"An,"n2"An,"n3"An,"n4"An,"n5"An?**	Store the dial to open number(s) DTO to the next available memory location(s), where n1 = 1st DTO number, n2 = 2nd DTO number, n3 = 3rd DTO number, n4 = 4th DTO number, n5 = 5th DTO number and assign an access level where An = A0 - A9, also send confirmation text of DTO numbers, locations of where they are stored and the access level assigned.

Example: If memory locations 000 - 003 are already occupied with DTO numbers and following the same principle of storing the DTO numbers in the next available location using the appropriate STR programming command shown in the table above. Then in order to store the 3 dial to open numbers: 01912243174 (n1), 01912241558 (n2), 07771234567 (n3) with the following access levels: A3 for n1, A2 for n2 and A1 for n3 respectively the following text can then be sent to the GSM PRO intercom to program the DTO numbers and access levels:

1111STR"01912243174"A3,"01912241558"A2,"07771234567"A1?

Including a **?** at the end of the command the GSM PRO intercom will reply with the following text:

MEM OPEN 004 = 01912243174,A3
MEM OPEN 005 = 01912241558,A2
MEM OPEN 006 = 07771234567,A1
OK VIDEX GSM

In the example the DTO numbers are stored from memory location 004 onwards as this is the next available location and the access level for each DTO number is shown after the telephone number being stored.

CHECK/SET DATE & TIME (CLK)

The check date and time feature relies on the network providers time zone setting (also refer to important note above). After a SIM has been placed into the GSM PRO intercom and powered up the SIM will attempt to register with the network and automatically synchronise with the network providers time zone setting. The following text messages can be sent to the GSM PRO intercom to check and set the current time and date. The date and time format is as follows: yy/mm/dd, hh:mm, where yy = year, mm = month, dd = date and hh = hour, mm = minutes.

1111CLK?	Check current time & date and send a confirmation text back to the sender.
1111CLK"yy/mm/dd,hh:mm"	Set current time & date.
1111CLK"yy/mm/dd,hh:mm"?	Set current time & date and send a confirmation text back to the sender.

Example: Setting the current time & date to 10:05am, 18th April 2016, the following text can be sent to the GSM PRO intercom:

1111CLK"16/04/18,10:05"?

The GSM PRO intercom will reply with the following text:

CLK = 16/04/18, 10.05
OK VIDEX GSM

CHECK INPUT STATUS (CHK)

IMPORTANT NOTE: This feature is only applicable when auxiliary output AO1 mode has been set to mode 02. If auxiliary output AO1 is set to any other mode then this feature will not work (also refer to Fig.32 on page 24 and setting auxiliary output AO1 mode, A1M, on page 44).

If auxiliary output AO1 (**A1M**) mode has been set to mode 02 then the status of this mode can be checked by sending the following text to the GSM PRO intercom.

1111CHK?	Check the current status of auxiliary output AO1 and send a confirmation text back to the sender.

Example: Check the current status of auxiliary output AO1, the following text can be sent to the GSM PRO intercom:

1111CHK?

The GSM PRO intercom will reply with either of the following texts:

IN = OP **OK VIDEX GSM** **(status open)**	**or**	**IN = CL** **OK VIDEX GSM** **(status closed)**

SILENT DIALLING MODE (AUE)

When the GSM PRO intercom is calling the telephone number stored there is a choice of either hearing the ringing noise from the intercom panel or just hearing beeps to indicate a call is in progress.

- Ringing heard during calling: nn = 01
- Beeps heard during calling: nn = 00

The following text messages can be sent to the GSM PRO intercom to enable (00), disable (01) or query the setting of the silent dialling feature.

1111AUEnn	Set the silent dialling mode nn: 01 or 00.
1111AUEnn?	Set the silent dialling mode nn: 01 or 00 and send a confirmation text back to the sender.
1111AUE?	Query the current mode stored. A text message will be sent back to the sender confirming which silent dialling mode has been set.

SEND DTMF TONE AFTER CALL ANSWERED FOR CALL BUTTON 1(DTP, DTD AND DTT)

It is possible to set the GSM PRO intercom to send a DTMF tone after a call is answered. This option is only available for both the primary number of button 1 and the divert 1 number for button 1. This feature is useful if the intercom is dialling into a telephone system where an automated menu is present and a DTMF tone is required to select a particular option from the menu. This feature is disabled by default. The following programming text messages allow the user to setup the DTMF tone(s) required.

- The DTP command sets the DTMF tone required (from 0 - 9) after a call is answered for button 1.
- The DTD command sets the DTMF tone required (from 0 - 9) after divert 1 call is answered for button 1.
- The DTT command sets the delay time from when the call is answered to when the DTMF is sent.

SET DTMF TONE REQUIRED FOR BUTTON 1 PRIMARY CALL	
1111DTPn	Set DTMF tone required, where n = 0 - 9 for DTMF tones 0 - 9 or X to disable this feature (for button 1).
1111DTPn?	Set DTMF tone required, where n = 0 - 9 for DTMF tones 0 - 9 or X to disable this feature. Also send a confirmation text back to the sender with the stored DTMF tone setting (for button 1).
SET DTMF TONE REQUIRED FOR BUTTON 1 DIVERT CALL	
1111DTDn	Set DTMF tone required, where n = 0 - 9 for DTMF tones 0 - 9 or X to disable this feature (for divert 1).
1111DTDn?	Set DTMF tone required, where n = 0 - 9 for DTMF tones 0 - 9 or X to disable this feature. Also send a confirmation text back to the sender with the stored DTMF tone setting (for divert 1).
SET THE DELAY TIME FROM WHEN THE CALL IS ANSWERED TO WHEN THE DTMF TONE IS SENT	
1111DTTnn	Set the time nn, where nn = 01 - 12 seconds.
1111DTTnn?	Set the time nn, where nn = 01 - 12 seconds and also send a confirmation text back to the sender of the time stored.
QUERY THE SETTINGS	
1111DTP?	Query the DTMF tone set, replies TP = n, where n = 0 - 9 or X.
1111DTD?	Query the DTMF tone set, replies TD = n, where n = 0 - 9 or X.
1111DTT?	Query the delay time set, replies TT = nn, where nn = 01 - 12 seconds.

ENABLE THE DIAL '0' ON ANSWER FUNCTION (EDZ)

When enabled this feature allows an incoming call to be diverted to the programmed divert telephone number if the '0' button on the telephone has not been pressed after answering the call. This can be useful if the user's number has an answerphone service (or answer machine) and they do not want the call to be answered by this service or if the primary number (mobile no.) is switched off.

The default for this function is disabled (set to 00). The following texts can be used to enable or disable this function.

1111EDZnn	Set the dial '0' function nn: 01 or 00 (01 = enable, 00 = disabled).
1111EDZnn?	Set the dial '0' function nn: 01 or 00 (01 = enable, 00 = disabled) also send a confirmation text back to the sender.
1111EDZ?	Query the dial '0' mode set.

When this feature is set the user answering the call must press '0' on their phone to accept the call otherwise the call will be diverted to the next number.

ENABLE THE # (HASH) FUNCTION (ED#)

Once enabled the end user must press the **#** button on their phone before pressing any other button (also refer to the user command table on page 68) with the exception of when the user needs to enter the 4 digit programming code **"1111"**.

The user will have up to 3 seconds to press the user command button (e.g. button **3** to activate the relay), if the user doesn't press the next button within the 3 second window they will have to press the **#** button again.

By default this function is disabled (set to 00). The following texts can be used to enable or disable this function.

1111ED#nn	Set the # function nn: 01 or 00 (01 = enable, 00 = disabled).
1111ED#nn?	Set the # function nn: 01 or 00 (01 = enable, 00 = disabled) also send a confirmation text back to the sender.
1111ED#?	Query the # mode set.

ENABLE PROXIMITY READER (EPR)

The GSM PRO intercom features a built-in proximity fob/card reader. The proximity reader can be enabled or disabled depending on whether this feature is required. The default setting for this is disabled. The following programming texts are used to enable or disable the proximity reader.

1111EPRnn	Set proximity reader nn: 01 or 00 (01 = enabled, 00 = disabled).
1111EPRnn?	Set proximity reader nn: 01 or 00 (01 = enabled, 00 = disabled) and send a confirmation text back to the sender.
1111EPR?	Query mode. A text message will be sent back to the sender confirming if the proximity reader is enabled or disabled.

PROXIMITY NUMBER OF BYTES TO CHECK (PBY, 02, 03 & 04)

This function of the built-in proximity reader will only be applicable if the proximity reader has been enabled (see **EPR** function above). After the proximity reader is enabled the number of bytes that the reader checks is dependant on which type of proximity fob/card is used (also refer to the GSM PC software manual **GSMSK_66251720_EN_V2-0** (or later).

Understanding the Fob Format and Card Number

It is important to understand the relationship between the fob format and the card number when setting up the proximity reader to check for the correct number of bytes.

- **Fobs/Cards with 5 digit number (user code):** If a proximity fob/card has no site code but a 5 digit user code (e.g. 955/T or 955/C) the **PBY** format should be set to check for 2 bytes (02).
- **Fobs/Cards with 3 digit site code and 5 digit user code:** If using a fob/card with a 3 digit site code and 5 digit user code (e.g. PBX1E or PBX2) the **PBY** format can be set to check for 2 bytes (02) or 3 bytes (03).
- **Fobs/Cards programmed using the PROXE or PROX-USB desktop reader:** If using a desktop reader the **PBY** format can be set to check for 2 bytes (02), 3 bytes (03) or 4 bytes (04).

The default setting for this function is set to check for 2 bytes, '02'. The following texts can be used to change this setting.

1111PBYnn	Set proximity reader to check for number of bytes nn: 02, 03 or 04 (02 = check for 2 bytes, 03 = check for 3 bytes, 04 = check for 4 bytes).
1111PBYnn?	as above and send a confirmation text back to the sender.
1111PBY?	Query the number of bytes that the GSM PRO has been set to check for.

PBY setting	Description
2 bytes	Will read all fobs/cards types programmed.
3 bytes	Will not read fobs/cards programmed with only 2 bytes (5 digit) information.
4 bytes	Will not read fobs/cards programmed with only 2 bytes (5 digit) or 3 bytes (8 digit) information.

Programming the GSM Intercom

<u>IMPORTANT NOTE:</u> It is recommended that only one fob/card type is used (i.e. 955/T or PBX-1E etc.) to allow for easier set up and programming of the GSM PRO reader. <u>Mifare cards cannot be used.</u>

STORE A PROX FOB/CARD TO A KNOWN LOCATION (000 - 999) OR STORE IN THE NEXT AVAILABLE LOCATION (FOB)

Once the built-in proximity reader or expansion reader (Art.4850R) has been enabled and the number of bytes to check for has been set (refer to the **EPR** and **PBY** setup on the previous page) the proximity fobs/cards can be programmed into the GSM PRO intercom.

The GSM PRO intercom can store up to 1000 fobs/cards (000 - 999). Both the built-in reader and expansion readers (Art.4850R) can be programmed with any one of the following fobs:

- **955/T or 955/C** = Videx fobs or cards. These fobs and cards have no site code and have a 5 digit user code, so the **PBY** function must be set to 02 (the default setting, checking for 2 bytes).
- **PBX1E or PBX2** = Portal Plus fobs or cards. These fobs and cards have a 3 digit site code and 5 digit user code, so the **PBY** function can be set to 02 or 03.

The following texts can be used to program fobs or cards to a known memory location.

1111FOBnnn"site","user" **or** **1111FOBnnn"site","user"?**	Store fob/card in location nnn, where nnn = the memory location from 000 - 999 of where the fob/card is actually stored (see examples below for each type of fob/card). The "site" and "user" code is the number taken directly from the fob/card. Including the ? at the end of the command will send a confirmation text back to the sender.
1111FOBnnn?	Query the fob/card stored in memory location nnn and send a confirmation text back to the sender with the stored fob/card details.

The following examples show how to program each fob/card type:

Example 1: Programming a **955/T** or **955/C** with no site code, a 5 digit user code of **12345** and storing it in memory location **001**, the following text can be sent to the GSM PRO intercom:

1111FOB001"0","12345"

For these fob/card types a **0** must be inserted for the "site" code.

Example 2: Programming a **PBX1E** or **PBX2** with a 3 digit site code of **123**, a 5 digit user code of **45678** and storing it in memory location **010**, the following text can be sent to the GSM PRO intercom:

1111FOB010"123","45678"

Expanding on the FOB programming command it is also possible to store a fob or card into the next available memory location. This is particularly useful when programming additional fobs or cards into a GSM PRO intercom with existing fobs and cards already programmed into it, but the locations of where they are stored is unknown. Using the FOB programming text string, but omitting the **nnn** (000 - 999) memory location from the command the following texts can be used to program fobs or cards to the next free memory location and confirm where the fob or card will be stored.

1111FOB"site","user"	Store fob/card in the next memory location available. The "site" and "user" code is the number taken directly from the fob/card.
1111FOB"site","user"?	Store fob/card in the next memory location available and send a confirmation text back to the sender with the memory location of where the fob/card is stored. The "site" and "user" code is the number taken directly from the fob/card.

STORE A FOB/CARD IN A KNOWN LOCATION OR THE NEXT AVAILABLE LOCATION WITH AN ACCESS LEVEL (FOB)

The same **FOB** programming command can also be used to assign an access level to a proximity fob/card. An access level can be assigned to fobs/cards and stored directly to a memory location by including **nnn** (000 - 999) in the command string or they can be stored in the next available location by omitting the memory location from the command string (see examples below). The following FOB programming commands can be used.

1111FOBnnn"site","user"An	Store fob/card in memory location nnn and assign access level An, where memory location nnn = 000 - 999 and where the access level An = A0 - A9. The "site" and "user" code is the number taken directly from the fob/card.
1111FOBnnn"site","user"An?	As above and also send a confirmation text back to the sender with the location of where the fob/card is stored and the access level it is assigned to.
1111FOB"site","user"An	Store fob/card in the next memory location available and assign access level An, where the access level An = A0 - A9. The "site" and "user" code is the number taken directly from the fob/card.
1111FOB"site","user"An?	As above and also send a confirmation text back to the sender with the location of where the fob/card is stored and the access level it is assigned to.

Example 1: Programming a **955/T** or **955/C** with no site code, a 5 digit user code of **21092**, storing it in memory location **004** and assigning it to access level **A5**, the following text can be sent to the GSM PRO intercom:

1111FOB004"0","21092"A5?

For these fob/card types insert a **0** for the "site" code. Also including a **?** at the end of the programming command the GSM PRO intercom will reply with the following text:

FOB 004 = 0000021092,A5
OK VIDEX GSM

Example 2: Programming a **PBX1E** or **PBX2** with a 3 digit site code of **241**, a 5 digit user code of **15432**, storing it to the next free memory location (if locations 000 - 096 are occupied) and assigning it to access level **A3**, the following text can be sent to the GSM PRO intercom:

1111FOB"241""15432"A3?

Including a **?** at the end of the programming command the GSM PRO intercom will reply with the following text:

FOB 097 = 0024115432,A3
OK VIDEX GSM

FIND A FOB OR CARD (FDF)

The find a fob or card feature allows the user to search and find the fob/card location (between 000 - 999) of where a proximity fob or card is stored in the GSM PRO intercom. It locates the fob or card using the 5 digit user code printed on the fob (see the following example). The following text message can be used.

1111FDF"nnnnn"?	Find the fob/card location with user code nnnnn, where nnnnn = user code (5 digit user code printed on fob/card).

Example: Find fob/card location of card no. **12345**, the following text can be sent to the GSM PRO intercom:

1111FDF"12345"?

The GSM PRO intercom will reply with the following text:

STORED IN nnn
OK VIDEX GSM

where nnn = the fob/card location of where the fob/card is stored.

DELETE A FOB OR CARD WITHOUT KNOWING ITS LOCATION (DEF)

This feature allows the user to delete a fob or card without knowing the memory location of where it is stored. The feature uses the 5 digit user code printed on the fob/card to search through the memory locations where the fob/card data is stored and then deletes it from the GSM PRO intercom. The following text message can be used.

1111DEF"nnnnn"?	Find the fob/card location with user code nnnnn and delete, where nnnnn = user code (5 digit user code printed on fob/card), also send a confirmation text back to the sender.

Example: Delete fob/card card no. **54321**, the following text can be sent to the GSM PRO intercom:

1111DEF"54321"?

The GSM PRO intercom will reply with the following text:

DELETED
OK VIDEX GSM

STORE AN ACCESS CODE TO A KNOWN LOCATION (000 - 399) OR STORE IN THE NEXT AVAILABLE LOCATION (PIN)

If an Art.4903 keypad(s) has been connected to the GSM PRO using the RS485 connection this feature allows up to 400 (000 - 399) additional access codes to be programmed into the GSM intercom. These codes are stored in the GSM's internal memory and not the keypad itself. These additional codes can also be assigned to activate one or both of the keypad's onboard relays (**RLY1** and/or **RLY2**) by including the relay number **1** and/or **2** to the end of the programming code. By default relay **1** will be assigned if a relay is not specified in the programming command. The codes can be 4 - 8 digits in length.

The following texts can be used to program access codes to a known memory location.

1111PINnnn"code"12 **or** **1111PINnnn"code"12?**	Store access code in location nnn, where nnn = the memory location 000 - 399 where the access code is actually stored and code = 4 - 8 digit access code. The number 1 and/or 2 is the relay to activate. Including the ? at the end of the command will send a confirmation text back to the sender.
1111PINnnn?	Query the access code stored in memory location nnn and send a confirmation text back to the sender with details of where code is stored and which relays will be activated.

Programming the GSM Intercom

The following example shows how to program an access code:

Example: Programming a 4 digit access code of **4321**, storing it in memory location **001** and to activate relays **1** and **2**, the following text can be sent to the GSM PRO intercom:

1111PIN001"4321"12?

Note that in this example no commas **,** are required to separate the relay selections and a **?** has been included to receive a confirmation text. The GSM PRO intercom will reply with the following text:

PIN 001=4321,12
OK VIDEX GSM

Expanding on the PIN programming command it is also possible to store an access code into the next available memory location. This is particularly useful when programming additional codes into a GSM PRO intercom where there are already existing access codes programmed, but the locations of where they are stored is unknown. Using the PIN programming text string, but omitting the **nnn** (000 - 399) memory location from the command the following texts can be used to program access codes to the next free memory location and confirm where the code will be stored.

1111PIN"code"12	Store access code in the next memory location available, where code = 4 - 8 digit access code and the number 1 and/or 2 is the relay to activate.
1111PIN"code"12?	Store access code in the next memory location available, where code = 4 - 8 digit access code and the number 1 and/or 2 is the relay to activate. Also send a confirmation text back to the sender with details of where code is stored and which relays will be activated.

The following example shows how to program an access code into the next free memory location:

Example: If there are several access codes already programmed into the GSM PRO from memory locations 000 - 094, but the user didn't know they were programmed into these locations and where an 8 digit access code of **12345678** was required to activate relay **2** only, then the following text can be sent to the GSM PRO intercom:

1111PIN"12345678"2?

Note that in this example no comma **,** is required to separate the relay selection and a **?** has been included to receive a confirmation text. The GSM PRO intercom will reply with the following text:

PIN 095=12345678,2
OK VIDEX GSM

In this example the reply from the GSM PRO shows that the access code **12345678** is stored in memory loaction 095, which is the next available memory location after 094.

STORE AN ACCESS CODE WITH AN ACCESS LEVEL (PIN) INCLUDING RELAY SETUP

Expanding further on the **PIN** programming command an access level can also be assigned to the access code. Using the same **PIN** command as before the access level number **An** (from 0 - 9) is included at the end of the programming command. The following codes can be used to either store a code with an access level in a known location (000 - 399) or store a code with an access level in the next available location (also see examples below).

1111PINnnn"code"An	Store access code in location nnn and assign access level An, where nnn = memory location 000 - 399 where the access code is stored, where code = 4 - 8 digit access code and where An is the access level = A0 - A9.
1111PINnnn"code"An?	As above and also send a confirmation text back to the sender with the location of where the code is stored and the access level it is assigned to.
1111PIN"code"An	Store access code in the next free location and assign access level An, where code = 4 - 8 digit access code and where An is the access level = A0 - A9.
1111PIN"code"An?	As above and also send a confirmation text back to the sender with the location of where the code is stored and the access level it is assigned to.

Example 1: Programming an access code of **654321**, storing it in memory location **008** and assigning it to access level **A4**, the following text can be sent to the GSM PRO intercom:

1111PIN008"654321"A4?

Including a **?** at the end of the programming command the GSM PRO intercom will reply with the following text:

PIN 008 = 654321,1,A4
OK VIDEX GSM

In this example the 6 digit access code will be stored in memory location 008 and will automatically be setup to trigger relay 1 and the code assigned to access level 4.

Example 2: Programming an access code of **15432**, storing it to the next free memory location (if locations 000 - 125 are occupied) and assigning it to access level **A3**, the following text can be sent to the GSM PRO intercom:

1111PIN"15432"A3?

Including a **?** at the end of the programming command the GSM PRO intercom will reply with the following text:

PIN 126 = 15432,1,A3
OK VIDEX GSM

In this example the 5 digit code will be stored in location 126 (the next available location) as locations 000 - 125 are already occupied. As before the code will automatically be setup to trigger relay 1 and the code assigned to access level 3.

In the two examples above the access codes were setup to trigger relay 1 by default as no relays were specified in the programming command. Using the same programming format for assigning relays (see example on the previous page) both relay assignment and access level assignment can be sent to the GSM PRO in the same **PIN** programming command.

Example 3: To program an access code of **5678**, storing it in memory location **028** and setup the code to trigger relays **1** and **2**, and also assigning the code to access level **A9**, the following text can be sent to the GSM PRO intercom:

1111PIN028"5678"12A9?

Note that in this example no comma **,** is required to separate the relay selection and a **?** has been included to receive a confirmation text. The GSM PRO intercom will reply with the following text:

PIN 028 = 5678,12,A9
OK VIDEX GSM

In this example the 4 digit access code will be stored in memory location 028 and will be setup to trigger relays 1 and 2, also the code will be assigned to access level 9.

IMPORTANT NOTE: It should be noted that in the examples above that when assigning an access level the access level is assigned to the code and not the relays. The relay setup is purely which relays the access code will activate. The access level determines when the code will be active for.

Using example 3 above, if access level A9 was made up of two timebands (ATB): timeband 1 from 10:00 to 14:00 on weekdays only and timeband 2 from 09:30 to 13:00 on Sundays only, then the access code 5678 will only be active between 10am until 2pm Monday to Friday and 9:30am until 1pm on Sunday and will trigger relays 1 and 2, but only during these periods.

STORE A TEMPORARY ACCESS CODE IN THE NEXT AVAILABLE LOCATION (TMP)

It is also possible to store up to 32 temporary access codes in the GSM PRO intercom (when an Art.4903 keypad is connected via the RS485 bus connections). As these codes are only temporary the GSM PRO will allocate them to the next free memory location (between 400 - 431). The period of time that the codes are valid for can be set from 1 hour up to 255 hours upon which they will be automatically deleted after the period of time runs out.

Like the regular access codes the temporary codes can also be assigned to activate one or both of the keypad's onboard relays (**RLY1** and/or **RLY2**) by including the relay number **1** and/or **2** to the end of the programming code. By default relay **1** will be assigned if a relay is not specified in the programming command. The codes can be 4 - 8 digits in length.

The following texts can be used to program temporary access codes.

1111TMP"code"12,Tnnn	Store temporary code in the next free memory location, where code = 4 - 8 digit access code, the number 1 and/or 2 is the relay to activate and where nnn = the no. of hours between 1 - 255hrs the code is valid for.
1111TMP"code"12,Tnnn?	Store temporary code in the next free memory location, where code = 4 - 8 digit access code, the number 1 and/or 2 is the relay to activate and where nnn = the no. of hours between 1 - 255hrs the code is valid for. Also send a confirmation text back to the sender with details of which relays will be activated.

The following example shows how to program a temporary access code into the next free memory location:

Example: To program a 6 digit temporary code of **234567** to activate relays **1** and **2** and only be valid for 24 hours, the following text can be sent to the GSM PRO intercom:

1111TMP"234567"12,T024?

Note that in this example no commas **,** are required to separate the relay selections, however a comma **,** is required between the relay selections and the time period the code is valid for. A **?** has been included to receive a confirmation text. The GSM PRO intercom will reply with the following text:

TMP PIN TMP=234567,12
OK VIDEX GSM

In this example the reply from the GSM PRO will simply confirm that the temporary code has been stored and which relays the code will activate.

IMPORTANT NOTE: Remember that the maximum number of temporary codes that can be stored is 32. In the event that the temporary codes validation expires the GSM PRO intercom will delete the code from the memory.

FIND AN ACCESS CODE (FDC)

The find an access code feature allows the user to search and find the memory location (between 000 - 399) of where an access code is stored in the GSM PRO intercom. It locates the memory loaction using the full 4 - 8 digit access code length (see the following example). The following text message can be used.

1111FDC"code"?	Find the memory location where the 4 - 8 digit access code is stored, where code = 4 - 8 digit access code. Send a confirmation text back to the sender.

Example: Find the memory location for the access code **54321**, the following text can be sent to the GSM PRO intercom:

1111FDC"54321"?

The GSM PRO intercom will reply with the following text:

STORED IN nnn
OK VIDEX GSM

where nnn = memory location (000 - 399) of where the access code is stored. In the event that there is no access code stored the GSM will reply with the following text:

NOT FOUND
OK VIDEX GSM

IMPORTANT NOTE: When using the FDC feature to locate an access code the full 4 - 8 digit code length is required. A partial access code cannot be used for the search otherwise the GSM PRO will reply with NOT FOUND, as shown in the example above.

If the FDC feature is used to locate a temporary code, as before the full 4 - 8 digit code length is required for the search. If the temporary codes validation has not expired the GSM PRO will reply with a memory location between 400 - 431 of where the temporary code is stored. If the temporary code validation has expired the GSM PRO will reply with NOT FOUND, as shown in the example above, since it would have already been deleted automatically after the validation has expired.

DELETE AN ACCESS CODE WITHOUT KNOWING ITS LOCATION (DEC)

This feature allows the user to delete an access code (including temporary codes) without knowing the memory location of where it is stored. The feature uses the 4 - 8 digit code length to search through the memory locations where the code is stored and then deletes it from the GSM PRO intercom. The following text message can be used.

1111DEC"code"?	Find the access/temporary code and delete, where code = 4 - 8 digit code length, also send a confirmation text back to the sender.

Example: To delete an access code of **87654321**, the following text can be sent to the GSM PRO intercom:

1111DEC"87654321"?

The GSM PRO intercom will reply with the following text:

DELETED
OK VIDEX GSM

As shown in the FDC example on the previous page the full 4 - 8 digit code length is required for the DEC programming command.

DELETE ALL TEMPORARY ACCESS CODES (DEP)

This feature allows the user to delete all temporary access codes from the GSM PRO intercom. The following text message can be used.

1111DEP?	Delete all temporary codes, also send a confirmation text back to the sender.

FREE ACCESS TIMEBANDS (0 - 9) INC. OUTPUT SETUP WITH LATCH OR MOMENTARY TRIGGER (FRE)

The GSM PRO has up to 10 programmable free access timebands (0 - 9) that can be setup to operate the onboard relay or either of the auxiliary outputs **AO1** and **AO2**. Both the relay and the auxiliary outputs can be set to latch or momentarily trigger for the programmed relay time or programmed auxiliary output time respectively. The timebands are programmed in the same way as the access control timebands (**ATB**) with a **start** time and an **end** time (using 24hr clock notation) which can be set for a specific day or days of the week to be active for.

If the selected output (relay, auxiliary 1 or auxiliary 2) is setup to latch, the free access timeband will automatically activate the output when the **start** time is reached and will deactivate the output when it reaches the **end** time (i.e. the selected output will stay latched for the duration of the timeband).

If the selected output (relay, auxiliary 1 or auxiliary 2) is setup for momentary trigger, the free access timeband will automatically activate the output for the programmed output time when the **start** time of the timeband is reached. When the timeband reaches the **end** time the selected output will trigger again for the programmed output time, for example if the relay was setup to trigger

for 5 seconds then the relay will activate for 5 seconds at the beginning of the timeband and then activate again for 5 seconds at the end of the timeband.

The following text messages can be used to setup the free access timebands to activate the GSM PRO's relay or either of the auxiliary outputs and setup the selected output for latch or momentary trigger. For the list of days refer to the Days table on page 48.

1111FREn"HHMMHHMM"days:m:o	Store the time period for free access timeband n, where n = timeband no. (0 - 9) using this format: the first HHMM is the **start** time to be active from (i.e. 0845 for 8:45am in the morning) and the second HHMM is the **end** time that will stop being active from (i.e. 1930 for 7:30pm at night), where days = Mo, Tu, We, Th, Fri, Sa, Su, AD, WD, WE, output trigger m = L for latch or M for momentary and output selection o = RL for relay, A1 for auxiliary 1 and A2 for auxiliary 2.
1111FREn"HHMMHHMM"days:m:o?	As above and also send a confirmation text back to the sender of programmed free access timeband period including day(s) active for, output trigger and output selection.
1111FREn?	Query the information stored for free access timeband n, where n = free access timeband number (0 - 9), also send a confirmation text back to the sender.

Example: To program free access timeband number **7** to latch the GSM PRO's relay between 7:45am until 10:45am for the weekend only, the following text can be sent to the GSM PRO intercom:

1111FRE7"07451045"WE:L:RL?

Note that in this example no comma **,** is required to separate the time period and days selection. A **?** has been included to receive a confirmation text. The GSM PRO intercom will reply with the following text:

FA7 =07451045,Su,Sa,L,RL
OK VIDEX GSM

In this example the reply from the GSM PRO confirms the relay has been setup to latch for the weekend only (Saturday Sa and Sunday Su) for free access timeband number 7 between 7:45am until 10:45am.

IMPORTANT NOTE: If the selected output (relay: RL, auxiliary 1: A1 or auxiliary 2: A2) is setup for a momentary trigger the output will trigger for the programmed output time. Remember to set the output time using the respective programming code, i.e. for the relay use 1111RLTnn?, for auxiliary 1 use 1111A1Tnn? and for auxiliary 2 use 1111A2Tnn?

It should also be noted that when any of the outputs have been setup with free access the free access feature takes priority over other programming or modes that may have been setup for the output.

CLEAR ALL FREE ACCESS TIMEBANDS (FRD)

It is also possible to clear and reset all the free access timebands. The following text message can be used clear all the free access timebands.

1111FRD?	Delete all free access timebands, also send a confirmation text back to the sender.

DISABLE OR ENABLE SPEECH BOARD (SBM)

The GSM PRO intercom includes call progress speech annunciation which can be disabled (01) or enabled (02). The default setting for this function is enabled. The following text messages can be used to enable or disable this feature.

1111SBMnn	Disable or enable speech board nn: 01 or 02 (01 = disabled, 02 = enabled).
1111SBMnn?	Disable or enable speech board nn: 01 or 02 (01 = disabled, 02 = enabled), also send a confirmation text back to the sender.
1111SBM?	Query the speech board status.

SET SPEECH BOARD VOLUME (SBV)

The volume setting of the speech board in the GSM PRO intercom can be adjusted. The default volume level is set to 75, but can be set anywhere between 00 (low) up to 99 (high). The following text messages can be used to increase or decrease the volume level and query the current speech board volume setting stored.

1111SBVnn	Increase or decrease speech board volume nn, where nn = 00 (low) - 99 (high).
1111SBVnn?	Increase or decrease speech board volume nn, where nn = 00 (low) - 99 (high), also send a confirmation text back to the sender.
1111SBV?	Query the speech board volume setting.

FIND A TELEPHONE NUMBER (FDT)

The find a telephone number feature allows the user to find the dial to open location (between 000 - 999) of where a particular telephone number is stored in the GSM PRO intercom. It can locate the number either from using the full telephone number or a minimum of the last 4 digits of a number (see following examples). The following text messages can be used.

1111FDT"yyyyyyyyyyy"?	Find dial to open location of telephone number yyyyyyyyyyy stored, where yyyyyyyyyyy = telephone number (minimum of 4 digits).

Example 1: Find dial to open location of the telephone number using the full number **01234567890**, the following text can be sent to the GSM PRO intercom:

1111FDT"01234567890"?

The GSM PRO intercom will reply with the following text:

STORED IN nnn
OK VIDEX GSM

where nnn = the dial to open location of where the number is stored.

Example 2: Find dial to open location of the telephone number using the last 4 digits of the number **4567**, the following text can be sent to the GSM PRO intercom:

1111FDT"4567"?

The GSM PRO intercom will reply with the following text:

STORED IN nnn
OK VIDEX GSM

where nnn = the dial to open location of where the number is stored.

END ON LAST DIVERT (EOD)

The end on last divert feature allows the GSM intercom to ring each programmed divert number as usual and if the divert number is not answered it will then proceed to ring the next programmed divert number, if however there is no divert number stored the GSM intercom will simply end the call.

By default this feature is disabled (set to 00), but can be enabled (set to 01). The following programming commands can be used to set/check the end on divert function.

1111EODnn	Set end on last divert to nn, where nn = 00 (disabled) or 01 (enabled).
1111EODnn?	Set end on last divert to nn, where nn = 00 (disabled) or 01 (enabled). Also send a confirmation text back to the sender.
1111EOD?	Query the end on last divert status stored in the GSM module.

DOOR OR GATE (GAT)

This command feature of the GSM PRO allows the internal speech board to change the default speech annunciation that is heard from the intercom when the onboard relay is activated. For this feature to be heard the internal speech board must be switched ON (refer to notes on enabling or disabling the speech board, **SBM**, on page 59).

By default the mode of this feature is set to '01', whereby the internal speech board will announce **"the gate is open"** when the onboard relay is activated. The alternative mode can be set to '00', whereby the internal speech board will announce **"the door is open"**. To set the required mode the following commands can be sent to the GSM module.

1111GATnn	Set the speech board annunciation to mode nn: 01 or 00 (01 = "the gate is open", 00 = "the door is open").
1111GATnn?	Set the speech board annunciation to mode nn: 01 or 00 (01 = "the gate is open", 00 = "the door is open") also send a confirmation text back to sender.
1111GAT?	Query the speech board annunciation mode set.

SHUTDOWN AND RESTART (RBT)

This command feature allows the GSM PRO intercom to be remotely shutdown and then rebooted again. The following command can be sent to the GSM module.

1111RBT	Shutdown and restart the GSM module.

IMPORTANT NOTE: This feature should not be confused with the 'hard-wired' reset (described on page 30). The RBT function simply powers down the GSM module and then powers it back up again.

SIMULATE A BUTTON PRESS VIA SMS MESSAGE FOR BUTTONS 01-50 (BUT)

It is possible to simulate a button press (for the call button range 01 - 50) on the intercom by sending the following programming command, shown below, to the GSM PRO intercom. This feature can be useful if there is suspected fault with a call button or if there is an issue with the wiring for the buttons into the GSM's button matrix.

1111BUTnn	Simulate a button press for button number nn, where nn = button number 01 - 50.

Programming the GSM Intercom

The following commands are reserved for the technical department for interrorgating the GSM PRO module when testing and applying specific additional features that are not covered in this technical manual. For the application of these commands please contact Videx Technical on tel: **0191 224 3174** for UK based customers and Videx customer support on tel: **+39 0734 631699** for overseas customers.

PROGRAM BY 'AT' COMMANDS (PRG)

This is an advanced feature of the system which can allow an 'AT' format command to be sent to the OEM GSM module.

1111PRG(command)	Send an 'AT' command to the OEM module.

AT COMMAND SEND AT START UP (AT1, AT2 AND AT3)

The AT commands **AT1**, **AT2** and **AT3** are advanced commands of the GSM PRO that allows additional features to be incorprated into the module for testing purposes and include additional features for a specific application that is not already covered in this manual. The following commands can be sent to the GSM module.

1111AT1"ATxxxxxx"?	Include any AT command for AT1.
1111AT2"ATxxxxxx"?	Include any AT command for AT2.
1111AT3"ATxxxxxx"?	Include any AT command for AT3.

ENABLE EXTENDED OUTPUT TIMES (EXO)

The extended output time feature **EXO** allows the existing output time of the GSM PRO's relay (**RLT**) and two auxiliary outputs (**A1T** and **A2T**) to be increased for every second programmed to be extended to 1 minute. For example if the relay time **RLT** was set to 5 seconds and the extended output feature was enabled then the relay time would become 5 minutes.

There are 7 set extended output codes, from 81 to 87, that can be used. When one of these codes is used (refer to the **EXO code** table below) it will allow one or a combination of the outputs to have an extended output time. For example if code 83 was used then both the relay and auxiliary output 1 will have the extended output time feature enabled. So whatever the programmed relay time **RLT** and auxiliary output 1 time **A1T** are set to the time will be in minutes and not seconds and this will be the time the respective output will activate for. In this example auxiliary output 2 time **A2T** would still be set in seconds.

EXO code	Output(s)	EXO code	Output(s)	EXO code	Output(s)
81	Relay	**82**	AO1	**83**	Relay and AO1
84	AO2	**85**	Relay ans AO2	**86**	AO1 and AO2
87	Relay, AO1 and AO2	**32**	disabled (default)		

By default this feature is disabled (set to code 32). The following texts can be used to set the extended output time.

1111EXOnn	Enable the extended output time for the required output(s) using EXO code nn, where nn = 81 - 87 (refer to EXO code table).
1111EXOnn?	As above and also send a confirmation text back to the sender of EXO code.
1111EXO?	Query the stored EXO code.

Example: To enable the extended output time of the GSM PRO's relay to 5 minutes and auxiliary output 2 to 10 minutes, the GSM's relay time **RLT** must first be set to 5 seconds using the **1111RLT05** command and auxiliary output 2 (**AO2**) must first be set to 10 seconds using the **1111A2T10** command. Then the following text message can then be sent to the GSM PRO intercom:

1111EXO85?

Including a **?** at the end of the programming command the GSM PRO intercom will reply with the following text:

EXO = 85
OK VIDEX GSM

In the example the extended output time for both the relay and auxiliary output 2 (**AO2**) has been enabled. Since the original relay time **RLT** has been set to 05 and the original auxiliary output 2 (**AO2**) has been set to 10, when either of these two outputs are triggered the relay time will activate for 5 minutes instead of 5 seconds and auxiliary output 2 (**AO2**) will activate for 10 minutes instead of 10 seconds. As code 85 was used auxiliary output 1 time (**A1T**) will still only operate in seconds (whatever the **A1T** has been set to).

IMPORTANT NOTE: When the extended output time feature is enabled the respective output is still triggered in the same way i.e. the relay can still be triggered by pressing 3 on the phone during a call, triggered remotely by sending the text 1111RLY or if any dial to open numbers have been stored activated when a DTO number dials into the GSM PRO intercom.

OBTAIN THE GSM'S IMEI NUMBER (IME)

If the IMEI number (unique 15 digit number of the main internal hardware chip) of the GSM PRO intercom is required the following text message can be sent to obtain the number.

1111IME?	Query IMEI number of the GSM module, also send confirmation to the sender.

Example: Obtain IMEI number of the GSM module, the following message can be sent to the GSM intercom:

1111IME?

The GSM PRO intercom will reply with the following text:

IMEI-357803045065535
OK VIDEX GSM

<u>IMPORTANT NOTE:</u> If installing the GSM PRO for the first time, when registering the SIM card with the chosen network provider they may ask for the IMEI number of the GSM module. As the programming command described above will only work with a SIM card that has already been registered with a network the command will not work.

Instead to obtain the GSM's IMEI number, which is located on the main hardware chip internally, the GSM module will have to be opened. The IMEI number is printed on the Telit chip label just below the model number, as shown in Fig.86.

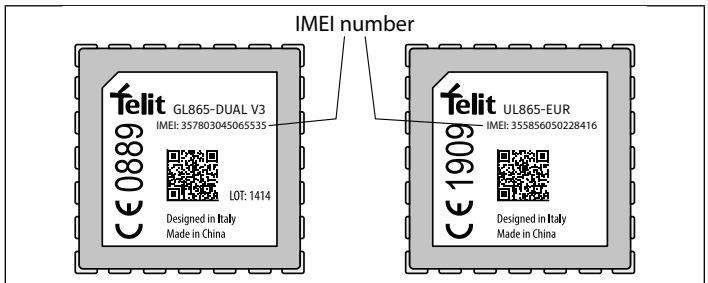

Fig. 86

It is recommended that you contact Videx Technical on tel: 0191 224 3174 for UK based customers and Videx Customer Support: +39 0734 631669 for overseas customers for advise on how to do this.

Alternatively use a SIM that is already registered with another network provider and fit it into the GSM PRO intercom (following the procedure on page 34 for initialisation), then use the programming command above 1111IME? to obtain the GSM PRO's IMEI number so that when registering the actual SIM that will be used with the GSM PRO with the chosen network you will have the appropriate IMEI number to hand.

UNLATCH PREVENTION FEATURE (LLA)

The unlatch prevention command **LLA**, when enabled, will prevent a programmed latched output (the GSM's relay or either of the auxiliary outputs) from being inadvertently unlatched by a programmed fob/card, access code, DTO number or by pressing the relevant button (**3**) on the phone during a call. Even when this feature is enabled if the GSM's relay or either of the auxiliary outputs have been setup to latch they can still be unlatched using the relevant **1111RUL**, **1111A1U** or **1111A2U** programming command.

By default this feature is disabled (set to 00), but can be enabled (set to 01). The following programming commands can be used to enable/disable and check the unlatch prevention feature.

1111LLAnn	Set the unlatch prevention feature to nn, where nn = 00 (disabled) or 01 (enabled).
1111LLAnn?	Set the unlatch prevention feature to nn, where nn = 00 (disabled) or 01 (enabled). Also send a confirmation text back to the sender.
1111LLA?	Query the status of the unlatch prevention feature stored in the GSM module.

The GSM Mobile App

THE VIDEX SMS WIZARD

In addition to programming by direct text messages or using the GSMSK programming software it is also possible to program the GSM intercom using the GSM mobile app, the **Videx SMS Wizard**.

The SMS wizard can be used to simplify the programming of the GSM intercom using SMS messages.

The SMS wizard generates the text message required to communicate with the GSM intercom. Depending on the model of the GSM (digital GSM, GSM PRO, GSM Lite, GSMVRK and 2270 GSM module) text messages can be generated to program features such as access codes, proximity access fobs/cards, dial to open (**DTO**) telephone numbers, assign pre-existing access levels, free access periods and call button/apartment telephone numbers.

Other features are also included to simplify the programming setup process. Additionally it is also possible for users to control their gate or door via the dial to open (**DTO**) or text message features.

WHERE TO DOWNLOAD THE SMS WIZARD AND GETTING STARTED

The SMS wizard is available for both Android smart devices (mobile smartphones and tablets) and also Apple iOS (iPhones and iPads) and can be downloaded for free from the Google Play Store (for Android devices) and the App Store (for iOS devices).

Before using the SMS wizard the following details will be required for initial setup:

- **Model of the GSM intercom module -** e.g. Art.4810 (GSM PRO), Art.4812 or Art.4812R (digital GSM) etc.
- **Firmware level of the GSM intercom -** e.g. for the Art.4810 GSM PRO the firmware might be **4K4.0.4** (the firmware version of the GSM module can usually be found on the label on the back of the GSM intercom or by sending the text message **1111VER?** to obtain the firmware version, also refer to notes on page 45).
- **Telephone number of the GSM intercom -** i.e. the mobile number of the SIM card being used in the GSM module.
- **Master code of the GSM intercom -** i.e. the 4 digit code used for programming, by default this is set to '**1111**'. In the event that this code has been forgotten or lost please refer to '**change the 4 digit master code (CDE)**' notes on page 46 or '**resetting the master code to 1111**' notes on page 35 to reset the code back to factory default if required.

Once downloaded and installed it is recommended that you first tap on the help icon ? in the top right corner of the app's homescreen and then follow the '**TO GET STARTED**' quick guide.

It should also be noted when navigating between the app's menu to the required programming screens the help icon ?, always located in the top right corner of each screen, can be used to offer additional guidance on how to use the current programming screen.

SMS WIZARD APP COMPATIBILITY

The SMS wizard is compatible with the latest GSM intercoms and modules available. It is also compatible with the older Art.4810N model from firmware version **1.0.4** onwards.

System Operation

MAKING A CALL AND CANCELLING A CALL FROM THE GSM PRO INTERCOM TO THE PHONE

Press the required call button. Two beeps will be heard to indicate the call has been placed, see **Fig.87**. The busy LED will switch ON then OFF and the call LED will illuminate to indicate that the system is engaged and a call is in progress, see **Fig.88**.

If the speechboard is switched ON then the GSM PRO will announce **"calling please wait"**.

If a mistake is made, simply press any other button to cancel the call, a long beep will be heard to confirm the call has been cancelled, see **Fig.89**. Both the busy and call LEDs will switch OFF, see **Fig.90**.

If the speechboard is switched ON then the GSM PRO will announce **"call cancelled"**.

IMPORTANT NOTE: If the silent dialling mode AUE has been left on default (i.e. silent dialling mode enabled) a normal telephone dial tone will be heard through the GSM's speaker after the call button has been pressed to indicate that the number is being called.

If the same button is pressed again after five seconds of placing the initial call this will also cancel the call. Pressing the same button before the five seconds is up will do nothing.

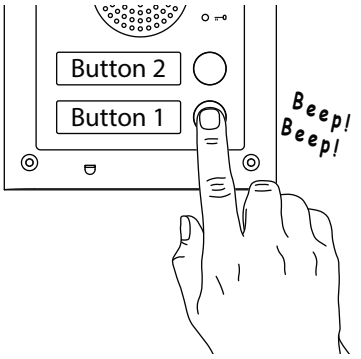

Fig. 87

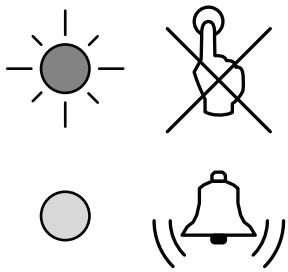

Fig. 88

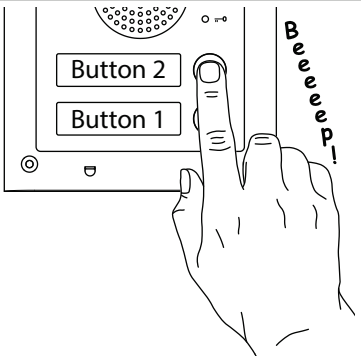

Fig. 89

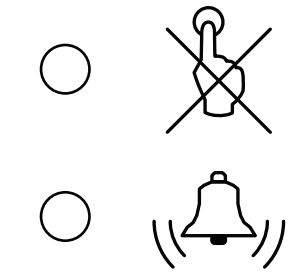

Fig. 90

ANSWERING AND ENDING A CALL FROM THE GSM PRO INTERCOM

After answering the call the speak LED on the GSM PRO will illuminate, see **Fig.91**. The speech will be open and a conversation can take place.

While the speech is open the user can:

- release the door/gate (refer to notes further on);
- latch the door/gate (refer to notes further on);
- activate the auxiliary outputs **AO1**/**AO2** (depending on auxiliary mode setup, also see programming notes);
- adjust speech volumes to and from the GSM PRO.

Also refer to the **user command tables** on page 68.

To end the call hang up the phone and the speak LED will switch OFF, see **Fig.92**.

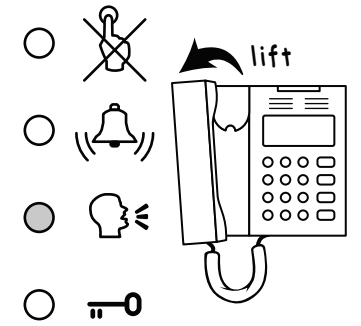

Fig. 91

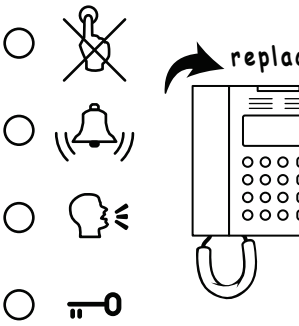

Fig. 92

IMPORTANT NOTE: The busy LED will switch ON then OFF at the beginning of the call and again will switch ON then OFF at the end of the call when either the user hangs up the phone or if the call time SPT expires.

DIVERTED CALL

First make a call from the GSM intercom, as described above. If any divert numbers are programmed and the primary number is not answered the GSM will then dial the divert number(s) after the programmed divert time **DIT** has elapsed (also refer to **STD**, **STE** and **STF** divert number programming and **DIT** divert time setup in the programming section of this manual).

IMPORTANT NOTE: When the GSM PRO intercom diverts to a programmed divert number there will be a brief pause before the intercom then proceeds to dial the divert number. If the speechboard is switched ON the GSM PRO will also announce "please wait", this is normal behaviour from the GSM module. Also if the silent dialling mode AUE has been left on default (i.e. silent dialling mode enabled) a normal telephone dial tone will be heard from the GSM's speaker after the brief pause to indicate that the divert number is being called.

System Operation

RELEASING THE DOOR/GATE FROM THE PHONE AFTER A CALL FROM THE GSM PRO INTERCOM (INC. LATCH/UNLATCH)

Releasing the door/gate is signalled by 1 second interval beeps from the GSM PRO intercom panel, see **Fig.93**.

After the call is answered and the speak LED illuminates, pressing **3** on the phone releases the door/gate for the programmed relay time and the door open LED will switch ON, see **Fig.94**.

If the speechboard is switched ON then the GSM PRO will announce **"the gate is open"** or **"the door is open"**.

Pressing **1** followed by **0** will latch the door/gate in the open position (to unlatch press **3** and the door/gate will unlatch or send text message **1111RUL** to the GSM PRO intercom).

Also refer to the **user command tables** on page 68.

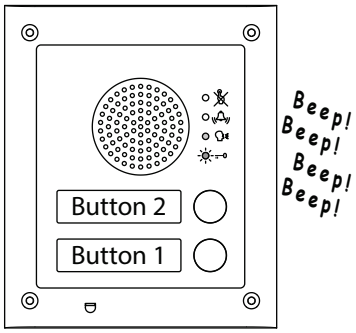

Fig. 93

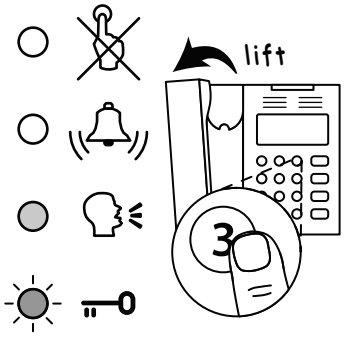

Fig. 94

RELEASING THE DOOR/GATE BY DIALLING THE GSM PRO INTERCOM (DIAL TO OPEN)

Releasing the door/gate by dialling into the GSM PRO using the dial to open **DTO** number is only possible if the caller's number has been stored correctly using the **STR** programming command (also refer to **STR** programming notes for correct setup).

Simply dial the mobile number of the SIM in the GSM PRO intercom. The GSM intercom will recognise the stored dial to open number that's calling, the busy and door open LED's will switch ON, as shown in **Fig.95**. The GSM will drop the call and open the door/gate for the programmed relay **RLT** time, after the relay time has elapsed the busy and door open LED's will switch OFF.

If the speechboard is switched ON then the GSM PRO will announce **"the gate is open"** or **"the door is open"**.

<u>IMPORTANT NOTE:</u> For this function to operate correctly the stored DTO number must have any "caller ID" or "witheld number" feature switched OFF. If this is not switched OFF on the number making the call to the GSM PRO intercom then the GSM module will not recognise the caller's number and simply drop the call and the door/gate will not operate.

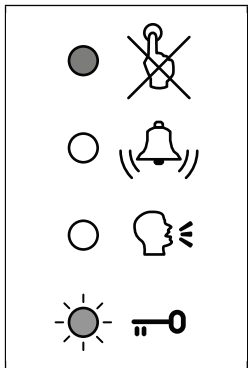

Fig. 95

RELEASING THE DOOR/GATE USING THE ONBOARD PROXIMITY READER

For the onboard reader to operate correctly it must first be enabled, the correct number of bytes setup and fobs/cards stored using the **EPR**, **PBY** and **FOB** commands (refer to the relevant programming notes on previous pages).

In standby the LED's on the front of the GSM PRO will be switched OFF, see **Fig.96**.

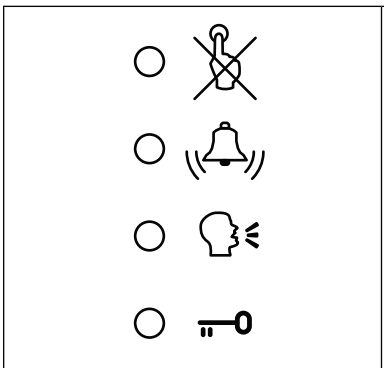

Fig. 96

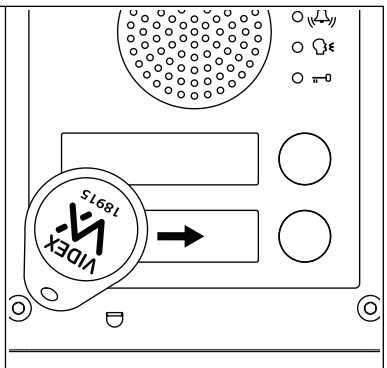

Fig. 97

ACCESS GRANTED

To operate the GSM relay present a programmed fob/card to the nameplate window for button 1, see **Fig.97** (in the case of the Art.4810-0 GSM PRO module being used the proximity window is located at the bottom of the GSM module, also refer to **Fig.3** on page 6).

Once the fob/card is presented the busy LED will flash once and the door open LED will switch ON for the duration of the programmed relay time **RLT**, and the panel will beep, see **Fig.98**.

If the speechboard is switched ON then the GSM PRO will announce **"the gate is open"** or **"the door is open"**.

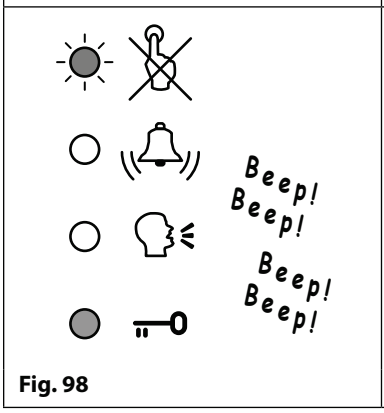

Fig. 98

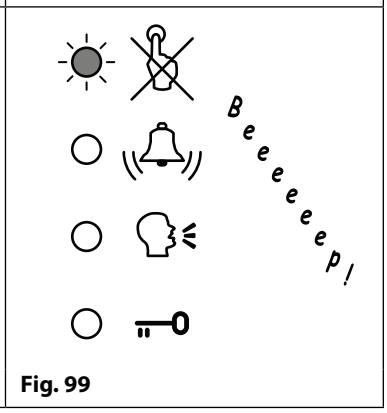

Fig. 99

ACCESS DENIED

If a fob/card is presented to the reader that is not stored in the GSM the busy LED on the front will switch ON and will emit a long beep, the other LED's will stay OFF, see **Fig.99**.

If the speechboard is switched ON then the GSM PRO will announce **"invalid code"**.

<u>IMPORTANT NOTE:</u> The onboard reader can be enabled and fobs/cards can also be programmed and setup using the GSMSK PC software, more information on how to do this can be found in the GSMSK manual: GSMSK_66251720_EN_V2-0 or later).

ACTIVATING THE ART. 4850R EXPANSION READER'S ONBOARD RELAY

The Art.4850R expansion reader must be connected via RS485 to the GSM PRO intercom (refer to wiring diagrams on page nn), setup with a unit ID, the correct number of bytes setup and fobs/cards stored using the **EPR**, **PBY** and **FOB** commands (refer to the relevant setup notes and programming notes on previous pages).

In standby the status indication LED on the front of the Art.4850R reader will be switched ON (amber).

ACCESS GRANTED

To operate the relay on the reader present a programmed fob/card to the proximity reading area.

Once the fob/card is presented the status LED will change from amber to green and the onboard relay will activate for the duration of the programmed relay time. The reader will also emit a double beep, while the busy LED on the GSM PRO intercom flashes ON and OFF, see **Fig.100**.

ACCESS DENIED

If a fob/card is presented to the reader that is not stored in the GSM PRO intercom the status LED on the front of the reader will change from amber to red and will emit 1 short beep followed by a short double beep, while the busy LED on the GSM PRO intercom flashes ON and OFF, see **Fig.101**.

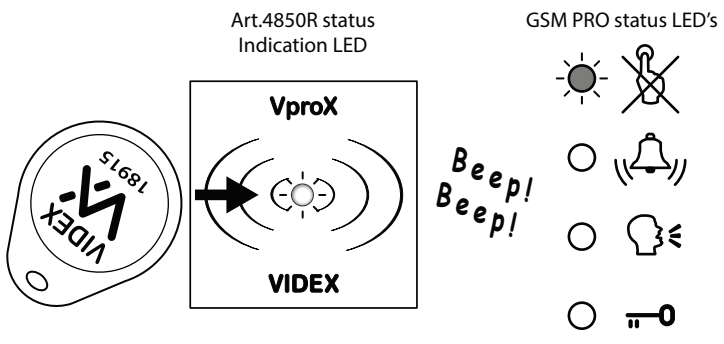

Fig. 100

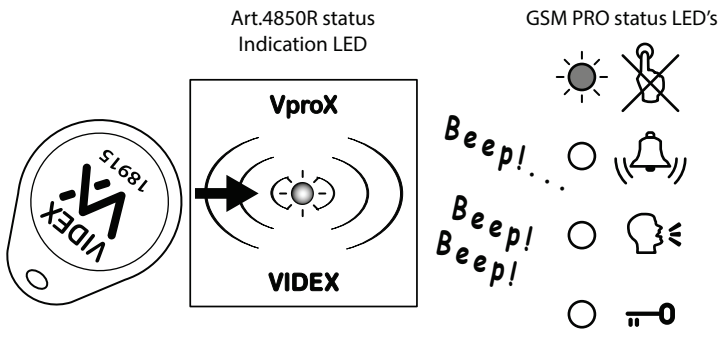

Fig. 101

<u>IMPORTANT NOTE:</u> The Art.4850R's onboard relay can also be activated via a push to exit it button (configured as a push-to-make switch) when connected across the - and PTE terminals on the back of the proximity module.

ACTIVATING THE ART. 4903 CODELOCK'S RELAYS

STANDALONE OPERATION I.E. NOT CONNECTED VIA RS485

The Art.4903 codelock can operate as a standalone keypad with up to 2 access codes only (1 code per relay), where the codes are programmed directly via the keypad (refer to programming and setup notes on pages 14 - 17, also refer to the wiring diagram **Fig.25** on page 21).

CORRECT CODE ENTERED (ACCESS GRANTED)

To operate:

1. Enter the correct access code for the respective relay, via the keypad, followed by the **ENTER** button. The appropriate relay (i.e. **RLY1** or **RLY2** depending on setup) will activate for the programmed relay time;
2. The green data LED will flash once and the codelock will emit a series of 1 second interval beeps for the duration of the programmed relay time, see **Fig.102**.

INCORRECT CODE ENTERED (ACCESS DENIED)

If an incorrect access code is entered:

1. No relay will activate.
2. The codelock will emit a low tone and the green data LED (**Fig.103**, 1) will flash 4 times followed by a brief pause;
3. The red status LED (**Fig.103**, 2) will then flash once and the codelock will emit a single beep.

<u>IMPORTANT NOTE:</u> The keypad's relays RLY1 and RLY2 can also be activated via a push to exit button (when configured as a push-to-make switch) when connected across - and SW1 for RLY1, - and SW2 for RLY2 respectively. It should also be noted that when the relay time has been set for latching (00) the push to exit button will operate as a "toggle" switch to latch the relay open and latch the relay closed.

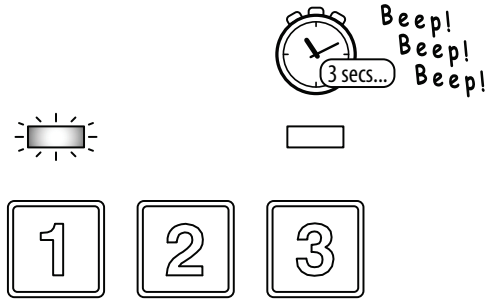

Fig. 102

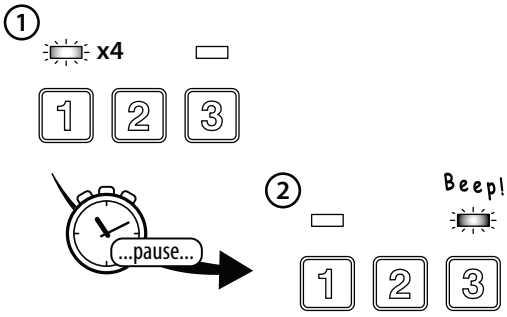

Fig. 103

OPERATION WHEN CONNECTED TO THE GSM PRO INTERCOM VIA RS485

When the Art.4903 codelock is connected to the GSM PRO intercom via the RS485 terminals it can operate with additional access control features (refer to the notes and **Fig.16** on page 17, to the notes and **Fig.41** on page 29, and also programming features in the programming section of this manual).

CORRECT CODE ENTERED (ACCESS GRANTED)

To operate:

1. Enter the access code for the respective relay followed by the **ENTER** button;
2. The green data LED (**Fig.104**, 1) on the Art.4903 and the red busy LED (**Fig.104**, 2) on the GSM PRO will flash one after the other;
3. The green data LED (**Fig.104**, 3) will then flash once and the appropriate relay (**RLY1** or **RLY2** depending on setup) will activate and keypad will emit a series of 1 second interval beeps for the duration of the programmed relay time.

If the speechboard is switched ON then the GSM PRO will announce **"the gate is open"** or **"the door is open"**.

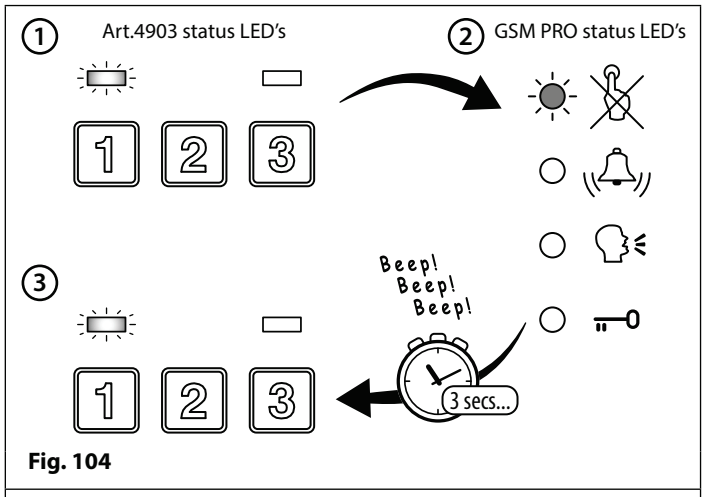

Fig. 104

INCORRECT CODE ENTERED (ACCESS DENIED)

If an incorrect access code is entered:

1. The green data LED on the Art.4903 and the red busy LED on the GSM PRO will flash one after the other;
2. Both the LED's on the keypad will switch ON (**Fig.105**, 1). The green data LED will then switch OFF (**Fig.105**, 2), followed by the red status LED and the codelock will play a melody (**Fig.105**, 3);
3. No relay will activate.

If the speechboard is switched ON then the GSM PRO will announce **"invalid code"**.

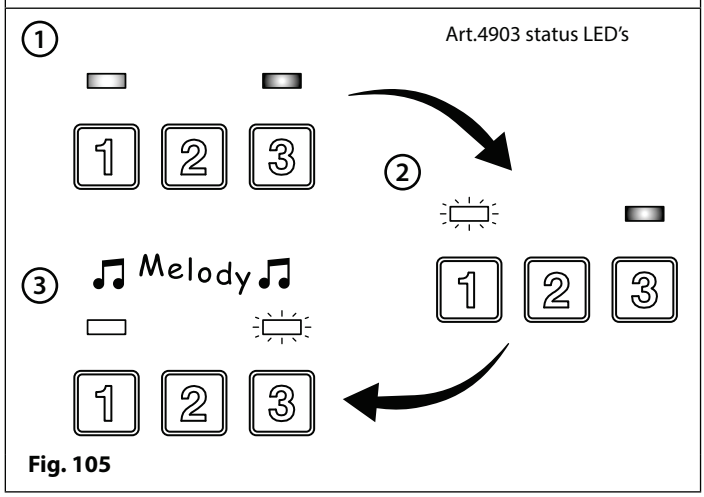

Fig. 105

<u>IMPORTANT NOTE:</u> If an Art.4903 keypad is connected via RS485 to the GSM PRO module and setup as device ID.1 only then will the speech annunciation come through the GSM's speaker i.e. "the gate is open" etc. (provided that the speechboard is also switched ON) when an access code is entered on the keypad.

User Commands

USER COMMAND TABLES

The following user command table shows the user commands that can be carried out during a call. Successful commands are signalled by two beeps from the telephone, errors are signalled by four beeps.

IMPORTANT NOTE: When the ED# function has been enabled the user must press the # button on their phone before pressing any of the following user commands (also refer to page 53 for further information).

FUNCTION	1st KEY TO PRESS	2nd KEY TO PRESS
Latch the relay (unlatch by pressing 3)	1	0
Release the door or gate	3	n/a
Activate auxiliary output AO1[1] (when A1M = mode 01)	6	n/a
Activate auxiliary output AO2[2]	5	n/a
Adjust door speech volume (GSM speaker)	4	0 - 9 (0 = lowest, 9 = highest)
Adjust phone speech volume (GSM mic)	7	0 - 9 (0 = lowest, 9 = highest)
Status Indication for AO1[3] (when A1M = mode 02)	9	n/a

[1] - Activating auxiliary output **AO1** in this way is only possible when **A1M** mode has been set to mode **01** (also see notes on page 44, **set auxiliary output AO1 mode**) and will operate for the programmed **AO1** time. If the **AO1** output time has been set to latch simply press **6** on the phone to unlatch the output again.

[2] - Auxiliary output **AO2** will activate for the programmed **AO2** time. If the **AO2** output time has been set to latch simply press **5** on the phone to unlatch the output again.

[3] - Auxiliary input **AO1** status indication is only possible when **A1M** mode has been set to mode **02** (also see notes on page 44, **set auxiliary output AO1 mode**).

The next user command table shows the SMS text messages that can be sent to the GSM intercom while in standby (the examples shown in the table use the default 4 digit master code 1111).

FUNCTION	MESSAGE TO SEND
Check the signal strength	1111SIG?
Check the available balance[4]	1111BAL?
Check the software version	1111VER?
Release the door/gate	1111RLY? (? optional, send if confirmation is required)
Latch the relay	1111RLA? (? optional, send if confirmation is required)
Unlatch the relay	1111RUL? (? optional, send if confirmation is required)
Activate auxiliary output AO1	1111A1O? (? optional, send if confirmation is required)
Latch auxiliary output AO1	1111A1L? (? optional, send if confirmation is required)
Unlatch auxiliary output AO1	1111A1U? (? optional, send if confirmation is required)
Activate auxiliary output AO2	1111A2O? (? optional, send if confirmation is required)
Latch auxiliary output AO2	1111A2L? (? optional, send if confirmation is required)
Unlatch auxiliary output AO2	1111A2U? (? optional, send if confirmation is required)
Check Timeband setting (for call buttons)	1111TBA?
Query Access Control Timeband (0 - 9)	1111ATBn? (where n = timeband 0 - 9, also see notes on pages 48 - 49)
Query Access Level (0 - 9)	1111ACCn? (where n = access level 0 - 9, also see notes on page 50)
Query Free Access Timeband setting (0 - 9)	1111FREn? (where n = free access timeband 0 - 9, also see notes on pages 58 - 59)
Check Intercom Time and Date	1111CLK?
Check Input Status	1111CHK?
Find a Dial to Open (DTO) number (000 - 999)	1111FDT"yyyyyyyyyyy"? (where yyyyyyyyyyy = telephone number, minimum of 4 digits, also see notes on pages 59 - 60)
Find a Fob or Card location (000 - 999)	1111FDF"nnnnn"? (where nnnnn = 5 digit user code printed on fob/card, also see notes on page 55)
Find an Access Code (000 - 399)	1111FDC"code"? (where code = 4 to 8 digit access code, also see notes on page 58)

[4] - The balance can only be checked if the correct balance check string has been stored (also see **SDL** notes on page 46). This feature is only applicable for pay-as-you-go SIM cards.

Additional User Information

UNDERSTANDING THE SIGNAL STRENGTH (SIG) AND BIT ERROR RATE (BER)

When a request for signal strength message is sent to the GSM PRO intercom it will reply with a two part code.

The first part of the code is a signal strength code **SIG** which will be between 0 – 31 or 99. Ideally the signal strength should be as close to 31 as possible for the best possible performance. The lower the number, the weaker the signal. Signal strengths lower than 10 may cause operational problems such as loss of speech quality (and possibly missing DTMF tones) and/or network loss. A signal strength of 99 indicates it could not be detected.

The second part of the code is the bit error rate **BER**. The bit error rate is used in digital telecommunication as a figure of merit for how effectively the receiver (in this case the GSM PRO intercom) is able to decode transmitted data (the data in this instance are the various text message commands used to program the GSM PRO intercom, described on pages 38 - 62, speech and DTMF signals used by the GSM PRO intercom for normal operation). It is the percentage of bits that have errors relative to the total number of bits received in a transmission. Ideally the **BER** code should be as close to 0 as possible, the lower the **BER** the better. High **BER** codes can be caused by noise, interference, distortion or bit synchronisation errors over the transmission of data to the GSM PRO intercom and as a result the problems described above (loss of speech quality, possibly missing DTMF tones and/or network loss etc.) can occur.

The example below shows the ideal reply to expect when the signal strength query **1111SIG?** is sent to the GSM PRO intercom:

SIGNAL = 31
BER = 0
OK VIDEX GSM

To achieve the best overall performance from the GSM PRO intercom a high signal strength **SIG** and low bit error rate **BER** is required. In the event that a low signal strength and high bit error rate is recieved it is recommended that the **Art.432** antenna is repositioned, where permissible, at the highest point to achieve the best signal. Where this is not possible an alternative high gain antenna can be used, in particular Videx recommends using the **ANT-GSM-2dB-5M** or **ANT-GSM-2dB-15M** high gain antennas or another suitable GSM antenna with a standard SMA male connector.

DIALLING INTO THE GSM INTERCOM FROM ANOTHER TELEPHONE

There are three possible outcomes to dialling into the GSM PRO intercom depending on the telephone number you are dialling in from and the features setup during programming. The three possible outcomes are shown in the table below and are shown in order of priority. For example, if the number is programmed to automatically activate the relay, this will take priority over the following two options and if the telephone number is stored as a telephone number called from one of the push buttons, this will take priority over the last option.

FUNCTION	REQUIREMENT	PRIORITY
Dial in to open the Door. After dialling the GSM number, the relay will activate and the call will be dropped.	The telephone number of the telephone dialling in must be stored in memory location (dial to open list) STR000 - STR999.	**1st**
Dial in to activate a call (live speech, activate relay/ auxiliary AO1, AO2). After dialling the GSM number, the call will be answered and two beeps will be heard. The speech will then be live.	The telephone number of the telephone dialling in must be stored in memory location: STN001 - STN050 STD001 - STD050 STE001 - STE050 STF001 - STF050	**2nd**
Dial in to open the speech from a telephone number not stored in the GSM intercom. After dialling the GSM number, the call will be answered and two beeps will be heard. You will then be required to enter the 4 digit code to open the speech.	If neither of the two requirements above are met.	**3rd**

UNDERSTANDING THE BEEPS

Functions and errors are indicated by beeps from the GSM PRO intercom panel. The following table will help you understand the different beeps heard and what, if anything, needs to be done in response to the beeps.

Also in the table please note that phrases are shown in brackets ( ) in **bold** to indicate that the GSM PRO's speechboard is switched **ON** (i.e. when a particular event occurs this is what the GSM PRO will announce through the speaker).

BEEP	REASON	SOLUTION
Short beeps at 1 second intervals.	Relay or auxiliary output activated.	None, this is normal.

Single short beep while the system is in standby and not being used.	A valid text message has been received and processed.	None, this is normal.
Double beep, a single short beep followed by a long beep.	Button pressed but no number stored.	Program a telephone number for the button pressed.
Long beep followed by short beep while the system is in standby.	Invalid text message received.	If this has happened when sending one of the programming text messages then check the message for errors. These beeps will also be heard if the 4 digit code in the text message is incorrect. If you are unsure of the 4 digit code, try resetting it to 1111.
Double beep (**"calling please wait"**).	Button pressed, GSM PRO dialling stored number.	None, this is normal.
Long beep while the system is in use (**"call cancelled"**).	Manually ending/cancelling a call by pressing another call button.	None, this confirms the call has been cancelled. Another call can be placed if required.
Four long beeps.	Not registered with a network provider but still trying.	Leave it a short while to see if it manages to find the network. If the beeps repeat every 30 seconds then try moving the antenna to a better location or changing the SIM to another network provider.
Six long beeps.	Unknown registering problem.	Try moving the antenna to a better location. Try changing the SIM card to another network provider.
Single short beep every 10 seconds after power up.	Unable to see the SIM card.	Check the SIM card is fitted correctly. Try removing the SIM card, cleaning and fitting again. Try a different SIM card.
Short beep, long beep repeated 3 times.	Call button pressed and either the call is on divert to the master number or it is outside the time set in the timeband (TBA) and there is no master number stored.	This may be the required setup but if it's not then either change the timeband times, store a master number to divert the calls to or open the switch between AO1 & g used to switch the calls into divert mode.
PROXIMITY READER (ONBOARD READER AND/OR ART.4850R EXPANSION READER)		
BEEP	**REASON**	**SOLUTION**
Successive short beeps lasting for the duration of the relay time (**"the door is open"** or **"the gate is open"**).	Programmed fob/card presented to the onboard/expansion reader.	None, this is normal.
Single long beep (**"invalid code"**).	Fob/card presented to the onboard reader is **not** programmed.	The fob/card requires programming into the GSM PRO module (ensuring the onboard reader is enabled).
Single long beep (**"invalid code"**).	Fob/card presented to the onboard/expansion reader **is** programmed in the GSM module however: 1. The number of bytes to check for maybe incorrect; 2. The fob/card may have an access level or timeband assigned to it; 3. The unit ID of the reader may be incorrect.	Although the fob/card **is** programmed in the GSM PRO module check one of the following: 1. Change the number of bytes to check for to 2 bytes (ensuring the onboard reader is enabled). 2. Confirm if fob/card has any access levels/ timebands assigned as it may be that the fob/ card is supposed to have restricted access. 3. Check to see if expansion readers have correct unit ID's set (the unit ID for the onboard reader will always be set to ID.1).

Single short beep followed by a short double beep.	Fob/card presented to the expansion reader is **not** programmed.	The fob/card requires programming into the GSM PRO module.
No beeps. The onboard reader is unresponsive.	The onboard reader has not been enabled (regardless of whether fobs have or have not been programmed).	Enable the onboard proximity reader.
ART.4903 CODELOCK (WHEN CONNECTED VIA RS485)		
BEEP	**REASON**	**SOLUTION**
Successive short beeps lasting for the duration of the relay time (**"the door is open"** or **"the gate is open"**).	Programmed access code entered via the keypad, code **is** stored in GSM PRO.	None, this is normal.
Single long beep (**"invalid code"**).	Access code entered via the keypad **not** stored in GSM PRO.	Access code requires programming into the GSM PRO module.
Single long beep (**"invalid code"**).	Access code entered via the keypad **is** stored in GSM PRO module however: 1. The code is assigned to an access level where the keypad's unit ID is incorrect, but the code falls within the required timeband setting; 2. The code is assigned to an access level where the keypad's unit ID is correct, but the code doesn't fall within the required timeband setting; 3. The code entered is only a temporary code.	Although the correct code **is** programmed in the GSM PRO module check the following: 1. Confirm if the code has an access level assigned to it, if so check the keypad's unit ID is assigned to that access level. 2. Confirm if the code has an access level assigned to it, if so check the settings of the timeband and confirm when the code should be active for. 3. If a temporary code is programmed it may be that the temporary codes validation time has already expired and the code deleted from the GSM (no further action required as this is normal).

User Management

RECORD SHEET

In order to manage the GSM PRO intercom more effectively it is recommended that an up to date record sheet is kept for all the programming particularly if there is a high volume of telephone numbers, fob/cards, access codes and system settings stored in the GSM intercom. This will also be useful if any future changes need to be made. The following table format can be used to record the GSM's basic information.

GSM PRO intercom telephone No.	
IMEI number	
Master code (default 1111)	
Master telephone No.	

The table format below can be used to record the call button numbers and the three divert numbers (from 001 to 050).

BUTTON	MEM. LOCATION	TELEPHONE NO.	USERNAME
Button 1 (primary pn)	STN001		
Button 1 (divert d1)	STD001		
Button 1 (divert d2)	STE001		
Button 1 (divert d3)	STF001		
⬇	⬇	⬇	⬇
Button 50	STN050		
Button 50 (divert d1)	STD050		
Button 50 (divert d2)	STE050		
Button 50 (divert d3)	STF050		

It is also recommended that a record sheet of the dial to open DTO (**STR**) numbers, username and access level is kept (from 000 to 999), following the table format below:

MEM. LOCATION	TELEPHONE NO.	USERNAME	ACCESS LEVEL
STR000....STR999			

If the onboard proximity reader and/or **Art.4850R** expansion reader(s) is being used it is recommended that a record sheet of the fob/card (**FOB**) numbers, username and access level is kept (from 000 to 999), following the table format below:

MEM. LOCATION	SITE CODE	USER CODE	USERNAME	ACCESS LEVEL
FOB000....FOB999				

If the **Art.4903** codelock is being used, via RS485 bus connection, it is recommended that a record sheet of the access codes (**PIN**), relays to activate and access level is kept (from 000 to 399), following the table format below:

MEM. LOCATION	ACCESS CODE	RLY1	RLY2	USERNAME	ACCESS LEVEL
PIN000....PIN399					

A note of the call button timeband (**TBA**) should be kept, following the table format below:

	ON TIME	OFF TIME	Su	Mo	Tu	We	Th	Fr	Sa
Timeband									

A note of the access control timebands (**ATB**) should be kept (from 0 to 9), following the table format below:

TIMEBAND NO.	ON TIME	OFF TIME	Su	Mo	Tu	We	Th	Fr	Sa
Timeband 0	:	:							
⬇	⬇	⬇							
Timeband 9	:	:							

A note of the free access timebands (**FRE**) should be kept (from 0 to 9), following the table format below:

TIMEBAND NO.	ON TIME	OFF TIME	Su	Mo	Tu	We	Th	Fr	Sa	RLY	AO1	AO2	LAT	MOM
Timeband 0	:	:												
⬇	⬇	⬇												
Timeband 9	:	:												

User Management

A note of the access levels should be kept (from 0 to 9), following the table format below:

ACCESS LEVEL NUMBER	ATB TIMEBAND NUMBER										READER (UNIT) ID							
	0	1	2	3	4	5	6	7	8	9	1	2	3	4	5	6	7	8
Access Level 0																		
⬇																		
Access Level 9																		

USING THE GSMSK PC SOFTWARE TO MANAGE USER INFORMATION AND DOWNLOAD STORED EVENTS

Because of the high volume of user information that may need to be recorded it is possible to use the GSMSK PC software (version 4.0.0.0 or later) to record and save the user's information as an excel spreadsheet using the **'Export'** feature. The GSMSK software can be used to record and save the call button setup (including divert numbers), the dial to open numbers, the proximity fob/card numbers and access codes. The software can also be used to download up to 4000 stored events from the GSM PRO module.

Further information on how to do this can be found in the following technical manual:

- **GSMSK_66251720_EN_V2-0** (or later version)

MANAGING GSM EVENTS REMOTELY

Users can also remotely monitor events in real-time from the GSM PRO module using Videx's web browser based events application. These events can then be viewed on any device such as a tablet, smartphone, laptop and PC.

IMPORTANT NOTE: The SIM card used in the GSM PRO intercom requires a data package to be included in order to send the events to the server. Setup of the system only requires a few short steps and help on this can be found once registered and logged in.

Further details on how to register an online profile for this application can be found on the website: ***www.videxevents.co.uk***

Troubleshooting

SYSTEM CHECKS AND TESTING

The following table can be used to help diagnose any potential issues that may be occur during installation and the system checks that can be carried out to help resolve them.

SYMPTOM	TEST / SOLUTION
Interference on the speech.	Check the signal strength **1111SIG?** (if the signal strength is too low the GSM module increases it's power to compensate, causing interference with the speech circuits). Try relocating the antenna or using a more powerful or directional antenna (e.g. high gain antenna).
	Ensure the antenna cables are not running close to the power supply cables or the microphone wires inside the intercom panel.
	Try a different SIM card from a different service provider as they may have better coverage in that area.
The intercom panel repeatedly beeps twice and the back lit name plate of the module (not additional button modules) does not illuminate.	Check the power supply has adequate voltage as described earlier in this manual (refer to pages 9 and 33).
	Try a full reset (refer to page 35), powering up with terminals g & 8 shorted.
	Try a different SIM card.
	The GSM PRO intercom module may have a fault.
Double beep, a single short beep followed by a long beep.	No telephone number programmed for that button. Check the programming.
	Check the SIM card is fitted correctly (refer to page 34).
The intercom panel does not respond to SMS messages.	Check the SIM card has an SMS service centre number stored. This will require putting the SIM card into a mobile phone to check. Contact the SIM card provider if you are not sure.
	Check the number you are sending the message to is correct (the number of the SIM card in the GSM PRO intercom panel).
	After sending an SMS message to the GSM PRO intercom listen for a single short beep from the intercom panel. This will indicate that the message was received and understood. If a long beep followed by a short beep is heard it indicates the message was either not understood or the 4 digit master code was incorrect.
	Try resetting the 4 digit master code to 1111 (refer to page 35), powering up with terminals g & 7 shorted.
The GSM PRO intercom does not respond to SMS messages, but all other functions appear to operate ok, e.g. DTO feature, adjusting speech volumes, releasing the door/gate when button 3 pressed on the phone etc.	This issue can occur on smartphones where the SMS messaging input method is set to UNICODE. Smartphones generally have 3 input methods: GSM alphabet, Automatic and UNICODE. The UNICODE setting is typically used when emoticons/emojis are used in the message so the GSM will not recognise text messages that are set to this mode. Check that the SMS messaging input method setting on the smartphone is **not** set up as UNICODE and is set to either GSM alphabet or Automatic. This can ususally be done via the settings icon on the smartphone. If you are unsure of how to do this Videx recommend consulting with the user's manual that came with the smartphone or consulting directly with the manufacturer of the smartphone.
The call keeps dropping out.	Increase the call time **(SPT)** in programming (refer to pages 43 and 44).
	Check the signal strength and if necessary, move or change the antenna or try a different SIM card provider.
Speech echoes and feeds back.	Try lowering the speaker volume using the dip-switches on the back of the GSM PRO intercom (refer to page 12).
	Try adjusting the volume using the programmable settings during a call (refer to user commands on page 68).
	Check the microphone is fitted correctly in the intercom panel and that the mic hole is not blocked in any way.
ERROR message returned in SMS when programming or no SMS returned at all even though a ? was included at the end of the message sent.	Check over the message sent again and compare it with the examples in this manual. Common errors include: 1. Using two apostrophe marks side by side instead of **"**. Note that these look the same in the message. An easy way to see if this is the problem is to move the cursor along in the message and if the cursor can get between the two **"** then it is not the correct character used. 2. Lower case letters instead of upper case. For example using **stn** when **STN** should be used.

Troubleshooting

Unable to open the gate/door from the telephone during a call (DTMF tones not being recognised)	If the DTMF tone to release the gate/door (or other DTMF tones shown in the first user command table on page 68) does not work then check to see if the **ED#** funtion has been enabled: 1. Send the following SMS command **1111ED#?** to the GSM and wait for a reply confirming the status of this function. 2. **Note:** If the **1111EDZ** function is set to 01 (enabled) then when answering the call it will be necessary to first press **0** to accept the call before **3** can be used to operate the gate/door. Further notes on how to effectively use these functions and on the setup of these functions can be found on pages 52 and 53.
	If the DTMF tones are not working reliably then try the following adjustments: 1. Send the following SMS command **1111AT1"AT#DTMFCFG=8,2500,1500"?** to the GSM intercom and wait for a reply. 2. After receiving the reply send the SMS command **1111RBT** then wait for the GSM intercom to reboot. 3. After the GSM intercom has rebooted test the door opening feature from the telephone during a call.
	If the first option doesn't resolve the issue then try the following: 1. Send the following SMS command **1111AT1"AT#DTMFCFG=7,2300,1300"?** to the GSM intercom and wait for a reply. 2. After receiving the reply send the SMS command **1111RBT** then wait for the GSM intercom to reboot. 3. After the GSM intercom has rebooted test the door opening feature from the telephone during a call.
	If neither of the above solutions resolve the problem then please contact Videx technical on tel: **0191 224 3174** for further assistance. For overseas customers contact Videx customer support on tel: **(+39) 0734 631 699** for further assistance.

Further guidance can also be found in the **additional user information** section of this manual on pages 69 - 71 in the 'understanding the beeps' table.

General Information

FIRMWARE REVISION

DATE	FIRMWARE VERSION	REVISION
10/05/16	4K3.0.0	Launch of 4810 GSM PRO.
19/12/16	4K3.0.2/2G , 4K3.1.2/3G	Update **AT** commands. Included door/gate setup **(GAT)** and shutdown and restart feature **(RBT)**. User command to activate auxiliary output **AO2** included.
17/10/17	4K4.0.1/2G , 4K4.1.1/3G	New firmware and hardware update with RS485 connectivity. Included **ED#** function, also included **EDR** function.
27/11/17	4K4.0.2/2G , 4K4.1.2/3G	Firmware update to include: end on last divert feature (**EOD**).
29/06/18	4K4.0.2B/2G , 4K4.1.2B/3G	Firmware update to include: • Added block for fobs with code **0000**. • Added 20 sec. delay between **DTO** events for issue in Belgium on iPhone 10's where relay was being activated twice on dial in.
24/01/19	4K4.0.3/2G , 4K4.1.3/3G	New major firmware update to include: • Requires PC software version 4.x.x.x or later. • Added RS485 keypads (**4903**) and proximity readers (**4850R**). • Added Access control timebands, access levels and free access timebands. • Added remote event logging via the ***www.videxevents.co.uk*** portal. • Added new SMS commands for programming coded access, free access timebands and programming multiple telephone numbers. Added SMS commands ready for new app. • Added SMS force dial button command **1111BUT**. • Timebands can now be set for individual days of the week. • New commands – ▫ **STN** for programming all 4 number in single SMS. ▫ **STR** for programming up to 5 dial to opens in a single SMS. ▫ **DET** for deleting a **DTO** number without knowing it's location. ▫ **1111FOB"0","12345"** – storing a fob in the next free location. ▫ **PIN** - Storing a pin/access code (max. 400 codes). ▫ **1111PIN"1234"** storing a **PIN** in the next free location. ▫ **FDC** Find the location of a stored code. ▫ **DEC** Delete a code. ▫ **DEF** Delete a fob. ▫ **TMP** Store temporary codes which only remain for 1-255 hours, (max. 32 codes). ▫ **DEP** Delete all temporary codes. ▫ **ATB** Access control time bands (Up to 10). ▫ **ACC** Access levels (Up to 10). ▫ **FRE** Free access for any of the outputs (Up to 10 periods). ▫ **FRD** Delete all free access periods. ▫ **EXO** Extended output times (1 second = 1 minute). ▫ **EDR** Command removed as no longer applicable.
10/04/19	4K4.0.4/2G , 4K4.1.4/3G	Firmware update: Fixed bug which affects the **STN** command when used with any button higher than 1 and only when storing multiple telephone numbers in the same SMS message.

27/09/19	4K4.0.5/2G , 4K4.1.5/3G	Firmware update to fix double = = on **SDL** SMS reply. Fixed **BAL** issue where message wasn't returned when querying via SMS. Also fixed bug with memory location 256 being stored in location 512. Firmware update to include SMS **LLA** command to prevent a latched output being unlatched by fob, code, DTO or pressing release during a call. SMS unlatch can still be used.

FURTHER READING

Additional programming information using the GSMSK PC software can be found in the following technical manual:

- **GSMSK_66251720_EN_V2-0** (or later)

Additional programming and setup information for the expansion proximity reader module and the access control keypad can be found in the following installation instructions:

- **ART.4850R_66250407_EN_V1-0** (or later)
- **ART.4903_66251800_EN_V1-0** (or later)

Additional information regarding connection to mains supply voltage can be found in the following regulations (for the UK only):

- **I.E.E. Wiring Regulations BS7671**

For overseas customers it is recommended that you consult with the relevant governing body for the appropriate regulations and standards of your country.

Notes

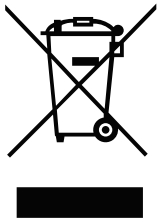

ENG **DISPOSAL**

In accordance with the Legislative Decree no. 49 of 14 March 2014 "Implementation of the Directive 2012/19/EU on waste electrical and electronic equipment (WEEE)".
The crossed-out bin symbol on the equipment or on the packaging indicates that when the product reaches the end of its lifetime, it must be collected separately from mixed municipal waste. The user must, therefore, dispose of the equipment at the end of its lifetime in the suitable waste collection centres or bring it to the retailer during the purchase of a new equipment of equivalent type at the ratio of one-to-one. Furthermore, the user is allowed to dispose of the WEEEs of very small size (domestic appliances without any external dimension exceeding 25 cm (9.84 inches) for free to the retailers, without any purchase obligation. The correct waste disposal of the WEEEs contributes to their reuse, recycling and recovery and avoids potential negative effects on the environment and human health due to the possible presence of dangerous substances within them.

ITA **SMALTIMENTO**

Ai sensi del Decreto Legislativo 14 marzo 2014, n° 49 "Attuazione della direttiva 2012/19/UE sui rifiuti di apparecchiature elettriche ed elettroniche (RAEE)".
Il simbolo del cassonetto barrato riportato sull'apparecchiatura o sulla sua confezione indica che il prodotto alla fine della propria vita utile deve essere raccolto separatamente dagli altri rifiuti urbani misti. L'utente dovrà, pertanto, conferire l'apparecchiatura giunta a fine vita presso gli idonei centri di raccolta differenziata oppure riconsegnarla al rivenditore al momento dell'acquisto di una nuova apparecchiatura di tipo equivalente, in ragione di uno a uno. L'utente ha, inoltre, la possibilità di conferire gratuitamente presso i distributori, senza alcun obbligo di acquisto, per i RAEE di piccolissime dimensioni (per le apparecchiature di tipo domestico con nessuna dimensione esterna superiore a 25 cm).
L'adeguata raccolta differenziata dei RAEE contribuisce al loro riutilizzo, riciclaggio e recupero ed evita potenziali effetti negativi sull'ambiente e sulla salute umana dovuti alla eventuale presenza di sostanze pericolose al loro interno.

FRA **ÉLIMINATION**

Conformément au décret législatif n ° 49 du 14 mars 2014 relatif à l' « Application de la directive 2012/19 / UE relative aux déchets d'équipements électriques et électroniques (DEEE) ».
Le symbole de la poubelle barrée sur l'équipement ou sur son emballage indique que le produit en fin de vie utile doit être collecté séparément des autres déchets municipaux en mélange. L'utilisateur doit donc remettre l'équipement en fin de vie aux centres de collecte appropriés ou le restituer au revendeur lors de l'achat d'un nouveau type d'équipement équivalent, dans le rapport de un à un. De plus, l'utilisateur a la possibilité de conférer gratuitement aux distributeurs, sans aucune obligation d'achat, de très petits DEEE (pour les appareils ménagers sans dimensions extérieures supérieures à 25 cm).
La collecte séparée adéquate des DEEE contribue à leur réutilisation, leur recyclage et leur valorisation et évite les éventuels effets négatifs sur l'environnement et la santé humaine en raison de la présence possible de substances dangereuses dans ceux-ci.

SPA **ELIMINACIÓN**

De conformidad con el Decreto legislativo n. 49 de 14 de marzo 2014 "Aplicación de la Directiva 2012/19/UE relativa a residuos de aparatos eléctricos y electrónicos (RAEE)".
El símbolo del contenedor tachado indicado sobre los aparatos o sobre los embalajes señala que el producto al final de su vida útil debe ser recogido separadamente de otros residuos municipales mezclados. Por tanto, el usuario deberà conferir los aparatos al final de su vida útil en los apropriados centros de recogida selectiva o devolverlos al revendedor al momento de la compra de nuevos aparatos equivalentes, en una relación de uno a uno. Además, el usuario tiene la posibilidad de entregar sin cargo a los distribuidores, sin ninguna obligación de compra, los RAEEs muy pequeños (para electrodomésticos sin dimensiones externas superiores a 25 cm).
La recogida selectiva apropriada de los RAEEs contribuye a su reutilización, reciclaje y valorización y evita potenciales impactos negativos sobre el medio ambiente y la salud humana debidos a la possible presencia de substancias peligrosas dentro de ellos.

NLD **VERWIJDERING**

In overeenstemming met het Wetsbesluit nr. 49 van 14 maart 2015 "Implementatie van de Richtlijn 2012/19/EU inzake afgedankte elektrische en elektronische apparaten (AEEA)".
Het doorgekruiste vuilnisbaksymbool op het apparaat of de verpakking geeft aan dat het product aan het einde van zijn levensduur niet samen met het gewone huisvuil weggegooid mag worden. De gebruiker moet het apparaat aan het einde van zijn levensduur inleveren bij een gepast inzamelpunt of de winkel waar hij een nieuw apparaat van een gelijksoortig type zal kopen. De gebruiker kan tevens AEEA's van een zeer klein formaat (huishoudapparaten met een buitenafmeting kleiner dan 25 cm (9,84 inch)) gratis en zonder enige aankoopverplichting bij handelaars inleveren. Een juiste verwijdering van AEEA's draagt bij tot hergebruik, recycling en terugwinning, en voorkomt potentiële negatieve effecten op het milieu en de menselijke gezondheid door de mogelijke aanwezigheid van gevaarlijke stoffen.

VIDEX®
THE POWER TO SECURE

Cert. N. IT05/1217

made in ITALY

MANUFACTURER **FABBRICANTE** **FABRICANT** **FABRICANTE** **FABRIKANT** **الشركة المصنِّعة**	**VIDEX ELECTRONICS S.P.A.** Via del Lavoro, 1 63846 Monte Giberto (FM) Italy Tel (+39) 0734 631669 Fax (+39) 0734 632475 www.videx.it - info@videx.it

CUSTOMER SUPPORT **SUPPORTO CLIENTI** **SUPPORTS CLIENTS** **ATENCIÓN AL CLIENTE** **KLANTENDIENST** **خدمة العملاء**	**VIDEX ELECTRONICS S.P.A.** www.videx.it - technical@videx.it Tel: +39 0734-631669 Fax: +39 0734-632475	UK Customers only: **VIDEX SECURITY LTD** www.videxuk.com Tech Line: 0191 224 3174 Fax: 0191 224 1559

Main UK office:
VIDEX SECURITY LTD
1 Osprey Trinity Park
Trinity Way
LONDON E4 8TD
Phone: (+44) 0870 300 1240
Fax: (+44) 020 8523 5825
www.videxuk.com
marketing@videxuk.com

Northern UK office:
VIDEX SECURITY LTD
Unit 4-7
Chillingham Industrial Estate
Chapman Street
NEWCASTLE UPON TYNE - NE6 2XX
Tech Line: (+44) 0191 224 3174
Phone: (+44) 0870 300 1240
Fax: (+44) 0191 224 1559

Greece office:
VIDEX HELLAS Electronics
48 Filolaou Str.
11633 ATHENS
Phone: (+30) 210 7521028
(+30) 210 7521998
Fax: (+30) 210 7560712
www.videx.gr
videx@videx.gr

Danish office:
VIDEX DANMARK
Hammershusgade 15
DK-2100 COPENHAGEN
Phone: (+45) 39 29 80 00
Fax: (+45) 39 27 77 75
www.videx.dk
videx@videx.dk

Benelux office:
NESTOR COMPANY NV
E3 laan, 93
B-9800 Deinze
Phone: (+32) 9 380 40 20
Fax: (+32) 9 380 40 25
www.videx.be
info@videx.be

Dutch office:
NESTOR COMPANY BV
Business Center Twente (BCT)
Grotestraat, 64
NL-7622 GM Borne
www.videxintercom.nl
info@videxintercom.nl

CE

The product is CE marked demonstrating its conformity and is for distribution within all member states of the EU with no restrictions. This product follows the provisions of the European Directives 2014/30/EU (EMC); 2014/35/EU (LVD); 2011/65/EU (RoHS): CE marking 93/68/EEC.

Il prodotto è marchiato CE a dimostrazione della sua conformità e può essere distribuito liberamente all'interno dei paesi membri dell'Unione Europea UE. Questo prodotto è conforme alle direttive Europee: 2014/30/UE (EMC); 2014/35/UE (LVD); 2011/65/UE (RoHS): marcatura CE 93/68/EEC.

Le produit est marqué CE à preuve de sa conformité et peut être distribué librement à l'intérieur des pays membres de l'union européenne EU.
Ce produit est conforme aux directives européennes 2014/30/EU (EMC) ; 2014/35/EU (LVD) ; 2011/65/EU (RoHS): marquage CE 93/68/EEC.

El producto lleva la marca CE que demuestra su conformidad y puede ser distribuido en todos los estados miembros de la unión europea UE.
Este producto cumple con las Directivas Europeas 2014/30/EU (EMC); 2014/35/EU (LVD); 2011/65/EU (RoHS): marca CE 93/68/EEC.

Het product heeft de CE-markering om de conformiteit ervan aan te tonen en is bestemd voor distributie binnen de lidstaten van de EU zonder beperkingen. Dit product volgt de bepalingen van de Europese Richtlijnen 2014/30/EU (EMC); 2014/35/EU (LVD); 2011/65/EU (RoHS): CE-markering 93/68/EEG.

يحمل المنتَج علامة التوافق الأوروبّي CE لإظهار توافقه مع المواصفات ذات الصِلة وإمكانية توزيعه في كافَّة دول الاتِّحاد الأوروبِّي بدون أيَّة قيود.
يلبِّي هذا المنتَج جميع متطلَّبات التوجيهات الأوروبِّية EU/2014/30 (EMC); 2014/35/EU (LVD); 2011/65/EU – (RoHS):
علامة المطابقة للمواصفات الأوروبِّية CE 93/68/EEC.

662507754-EN