SHORT RANGE

ODIN-W2 series

Stand-alone multiradio modules with Wi-Fi & Bluetooth

Data Sheet

Abstract

This technical data sheet describes the ODIN-W2 series short range multiradio modules with Wi-Fi and Bluetooth dual-mode (Classic Bluetooth v2.1+EDR and Bluetooth Low Energy v4.0). The ODIN-W2 is a compact yet powerful stand-alone multiradio module designed for Internet-of-Things applications in the compact ODIN form factor. The Wi-Fi support conforms to IEEE 802.11a/b/g/n, and has support for dual-band 2.4 GHz and 5 GHz operation and 2×2 MIMO (2.4 GHz).

www.u-blox.com

UBX-14039949 - R09

Document Information		
Title	**ODIN-W2 series**	
Subtitle	Stand-alone multiradio modules with Wi-Fi & Bluetooth	
Document type	Data Sheet	
Document number	UBX-14039949	
Revision and date	R09	08-Sept-2016
Document status	Early Production Information	

Document status explanation	
Objective Specification	Document contains target values. Revised and supplementary data will be published later.
Advance Information	Document contains data based on early testing. Revised and supplementary data will be published later.
Early Production Information	Document contains data from product verification. Revised and supplementary data may be published later.
Production Information	Document contains the final product specification.

This document applies to the following products:

Product name	Type number	Firmware version	IN reference
ODIN-W260	ODIN-W260-01B-00	2.0.1	UBX-16009938
ODIN-W262	ODIN-W262-01B-00	2.0.1	UBX-16009938

u-blox reserves all rights to this document and the information contained herein. Products, names, logos and designs described herein may in whole or in part be subject to intellectual property rights. Reproduction, use, modification or disclosure to third parties of this document or any part thereof without the express permission of u-blox is strictly prohibited.

The information contained herein is provided "as is" and u-blox assumes no liability for the use of the information. No warranty, either express or implied, is given, including but not limited, with respect to the accuracy, correctness, reliability and fitness for a particular purpose of the information. This document may be revised by u-blox at any time. For most recent documents, visit www.u-blox.com.

Copyright © 2016, u-blox AG.

u-blox® is a registered trademark of u-blox Holding AG in the EU and other countries. ARM® is the registered trademark of ARM Limited in the EU and other countries.

Contents

Contents 3

1 Functional description 6
1.1 Overview 6
1.2 Applications 6
1.3 Product features 6
1.4 Block diagram 7
1.5 Product description 7
1.6 AT command support 8
1.7 IEEE 802.11d and additional regulatory domains 8
1.7.1 ODIN-W2 IEEE 802.11d implementation description 8
1.8 MAC Addresses 10

2 Interfaces 11
2.1 Power management 11
2.1.1 Module supply input (VCC) 11
2.1.2 Digital I/O interfaces supply output (V_INT) 11
2.2 Antenna interfaces 11
2.2.1 Antenna connectors and internal antenna 11
2.3 Data communication interfaces 12
2.3.1 UART interface 12
2.3.2 Ethernet interface 12

3 System functions 14
3.1 Module power modes 14
3.2 Module reset 14
3.3 System IO 14

4 Pin definition 15
4.1 Pin assignment 15

5 Electrical specification 18
5.1 Absolute maximum ratings 18
5.1.1 Maximum ESD 18
5.2 Operating conditions 18
5.2.1 Temperature range 18
5.2.2 Power supply 18
5.2.3 I/O DC characteristics 19
5.2.4 Reset characteristics 19
5.2.5 LPO clock 19
5.2.6 Universal asynchronous serial interface (UART) 19
5.3 Power consumption 20

5.3.1 General power consumption 20
5.3.2 Wi-Fi 2.4 GHz power consumption 20
5.3.3 Wi-Fi 5 GHz power consumption 20
5.3.4 Classic Bluetooth power consumption 20
5.3.5 Bluetooth Low Energy (BLE) power consumption 21
5.4 RF characteristics 21
5.4.1 Wi-Fi receiver characteristics 2.4 GHz 21
5.4.2 Wi-Fi receiver characteristics 5 GHz 21
5.4.3 Wi-Fi transmitter characteristics 2.4 GHz 21
5.4.4 Wi-Fi transmitter characteristics 5 GHz 22
5.4.5 Classic Bluetooth receiver characteristics 22
5.4.6 Bluetooth Low Energy receiver sensitivity 22
5.4.7 Classic Bluetooth transmitter characteristics 22
5.4.8 Bluetooth Low Energy transmitter characteristics 22

6 Mechanical specifications 23
6.1 Dimensions 23
6.2 Module weight 24

7 Qualification and approvals 25
7.1 Compliance with RoHS directive 25
7.2 European Union regulatory compliance 25
7.3 Safety Compliance 25
7.4 FCC and IC Compliance 25
7.4.1 IC compliance 25
7.4.2 Conformité aux normes d'IC 26
7.4.3 FCC statement 26
7.4.4 Labeling requirements for end product 27
7.5 Japan radio equipment compliance 28
7.6 SRRC China Radio Transmission Equipment Type Approval 29
7.6.1 ODIN-W262 labeling requirements for end product 29
7.7 NCC Taiwan compliance 29
7.7.1 Taiwan NCC Warning Statement 29
7.7.2 ODIN-W260 labeling requirements for end product 29
7.7.3 ODIN-W262 labeling requirements for end product 30
7.8 Korean KCC certification 30
7.9 Australia and New Zealand regulatory compliance 30
7.10 Bluetooth qualification information 31

8 Antennas 32
8.1 Antenna accessories 32
8.2 Approved antennas 33
8.2.1 Single band antennas 33
8.2.2 Dual-band antennas 35

9 Product handling and soldering 36
9.1 Packaging 36
9.1.1 Reels 36
9.1.2 Tapes 36
9.2 Moisture sensitivity levels 37
9.3 Reflow soldering 37
9.4 ESD precautions 37

10 Labeling and ordering information 38
10.1 Product labeling 38
10.2 Explanation of codes 39
10.3 Ordering information 39

Appendix 40

A Glossary 40

Related documents 41

Revision history 41

Contact 42

1 Functional description

1.1 Overview

The ODIN-W2 series is a highly integrated multiradio module developed by u-blox for integration in demanding, reliable devices such as those needed for industrial and medical applications. The module is built around a multiradio chip, which includes dual-band Wi-Fi and dual-mode Bluetooth (Classic Bluetooth v2.1+EDR and Bluetooth Low Energy v4.0). The Wi-Fi support conforms to IEEE 802.11a/b/g/n, and has support for dual-band 2.4 GHz and 5 GHz operation and 2.4 GHz 2×2 MIMO.

The high performance ODIN-W2 series module is available in different versions (see Product features). The module has a small form factor and the interface layout is the same as previous Bluetooth and Wi-Fi modules from u-blox in the 15x22 mm ODIN form factor.

The module is complete with embedded driver, stack and application for wireless data transfer and AT-command configuration.

1.2 Applications

- Internet of Things (IoT)
- Wi-Fi and Bluetooth networks
- Medical and industrial networking
- Access to laptops, mobile phones, and similar consumer devices
- Home/building automation
- Ethernet/Wireless Gateway

1.3 Product features

Model	Radio									Interfaces						Features									Grade		
	Wi-Fi IEEE 802.11 (a/b/g)	Wi-Fi output power (dBm)	2.4 GHz channels 1-13	5 GHz channels 36-165	Bluetooth BR/EDR v2.1	Bluetooth Low Energy v4.0	Bluetooth output power (dBm)	Max range, in meters	Antenna type	UART	RMII	SPI	I²C	GPIO pins	AD converters (ADC)	Micro access point	Wi-Fi throughput (Mbps)	Wi-Fi Enterprise Security	Bluetooth throughput (Mbps)	iAP2 throughput (Mbps)	Bluetooth profiles	Low Energy Serial Port Service	Point-to-Point Protocol (PPP)	Extended Data Mode protocol	Standard	Professional	Automotive
ODIN-W260	•	18	•	•	•	•	14	300	U	•	•					•	20	•	1.3	1	SDG	•	•	•			
ODIN-W262	•	15	•	•	•	•	11	250	I	•	•					•	20	•	1.3	1	SDG	•	•	•			
ODIN-W260 *	•	18	•	•	•	•	14	300	U	•	•	•	•	29	3	•	20	•	1.3		SDPG						
ODIN-W262 *	•	15	•	•	•	•	11	250	I	•	•	•	•	29	3	•	20	•	1.3		SDPG						

* For customer applications with ARM mbed U = U.FL connector(s) for external antenna I = Internal antenna S = SPP, D = DUN, P = PAN, G = GATT *(planned for FW 3.0)*

Table 1: Key features of ODIN-W2 series

1.4 Block diagram

The block diagram of the ODIN-W2 series is shown below:

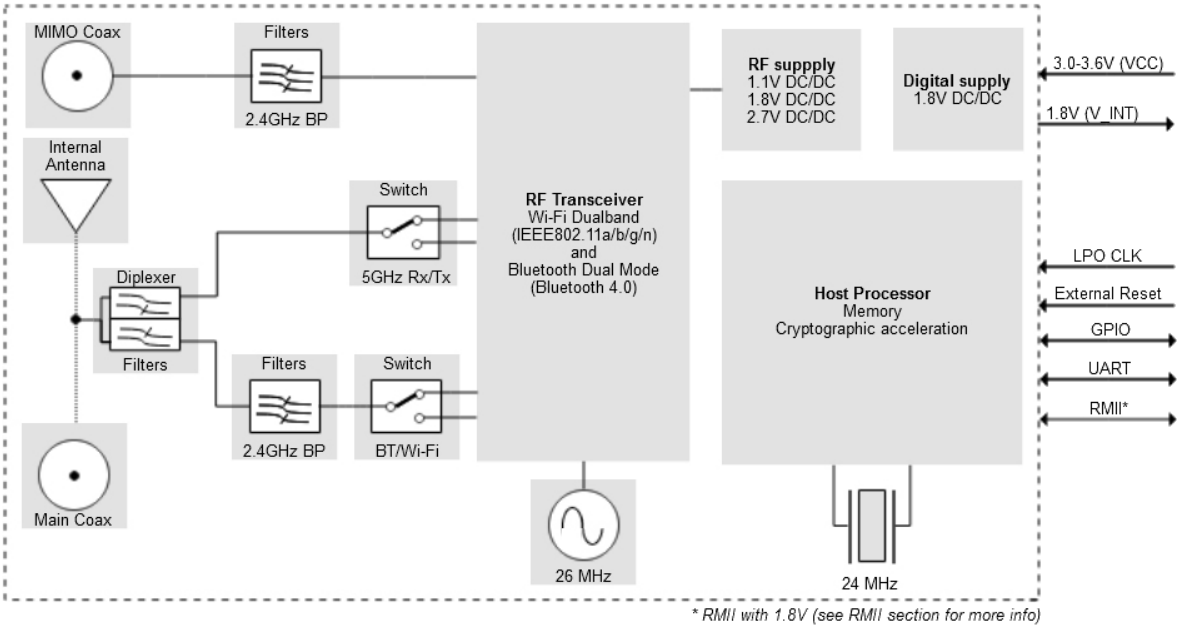

Figure 1: Block diagram of ODIN-W2 series

1.5 Product description

The ODIN-W2 series module supports Wi-Fi, classic Bluetooth and Bluetooth Low Energy (dual-mode / Bluetooth Smart Ready). The Wi-Fi support conforms to IEEE 802.11a/b/g/n, and has support for dual-band 2.4 GHz and 5 GHz operation and 2×2 MIMO (2.4 GHz).

Wi-Fi	Classic Bluetooth	Bluetooth Low Energy
IEEE 802.11a/b/g/n*** ODIN-W260: 2X2 MIMO***(2.4GHz only)	Classic Bluetooth v2.1+EDR Maximum number of slaves: 7 Bluetooth profiles: SPP, DUN, GATT and PAN	Bluetooth 4.0 BLE dual-mode
Band support 2.4 GHz, channel 1-13* 5 GHz, channel 36-165*	Band support 2.4 GHz, 79 channels	Band support 2.4 GHz, 40 channels
Maximum conducted output power 15 dBm	Maximum conducted output power 11 dBm	Maximum conducted output power 7 dBm
Maximum radiated output power 18 dBm EIRP**	Maximum radiated output power 14 dBm EIRP**	Maximum radiated output power 10 dBm EIRP**
Conducted sensitivity 2.4 GHz: -95 dBm 5 GHz: -90 dBm	Conducted sensitivity -90 dBm	Conducted sensitivity -95 dBm
Data rates: IEEE 802.11b: 1 / 2 / 5.5 / 11 Mbit/s IEEE 802.11a/g: 6 / 9 / 12 / 18 / 24 / 36 / 48 / 54 Mbit/s IEEE 802.11n SISO***: 6.5 / 13 / 19.5 / 26 / 39 / 52 / 58.5 / 65 Mbit/s IEEE 802.11n 2x2 MIMO***: 13 / 26 / 39 / 52 / 78 / 104 / 117 / 130 Mbit/s	Data rates: 1 / 2 / 3 Mbit/s	Data rates: 1 Mbit/s

* Maximum, supports 802.11d and depends on region.
** RF power including maximum antenna gain (3 dBi).
*** Planned feature.

Table 2: ODIN-W2 series Wi-Fi and Bluetooth characteristics

1.6 AT command support

The ODIN-W2 series modules support AT commands as described in the ODIN-W2 AT Commands Manual [1].

See also the s-center software, which is an easy-to-use tool from u-blox for evaluating, and configuration of u-blox Short Range modules. The s-center tool is available for download on the www.u-blox.com website.

1.7 IEEE 802.11d and additional regulatory domains

The ODIN-W2 series modules support IEEE 802.11d. IEEE 802.11d is an amendment to the IEEE 802.11 specification that adds support for "additional regulatory domains". IEEE 802.11d allows ODIN-W2 based devices to self-configure and operate according to the regulations of the country in which they operate. Its parameters include country name, channel quantity and maximum transmission level. The country information feature simplifies the creation of 802.11 wireless access points and client devices that meet the different regulations enforced in various parts of the world.

1.7.1 ODIN-W2 IEEE 802.11d implementation description

When ODIN-W2 is used as a Wi-Fi station, the scan is used to detect which regulatory domain it is currently in. Passive scan is used for channels that are not available in all regulatory domains. The device supports the following three domains, where WORLD means all channels that are supported both by FCC, ETSI and most other countries in the world:

- WORLD
- FCC
- ETSI

See Table 3 for detailed information on channels that are supported in the different regulatory domains. The state transition diagram below (Figure 2) describes the algorithm for selecting the current regulatory domain.

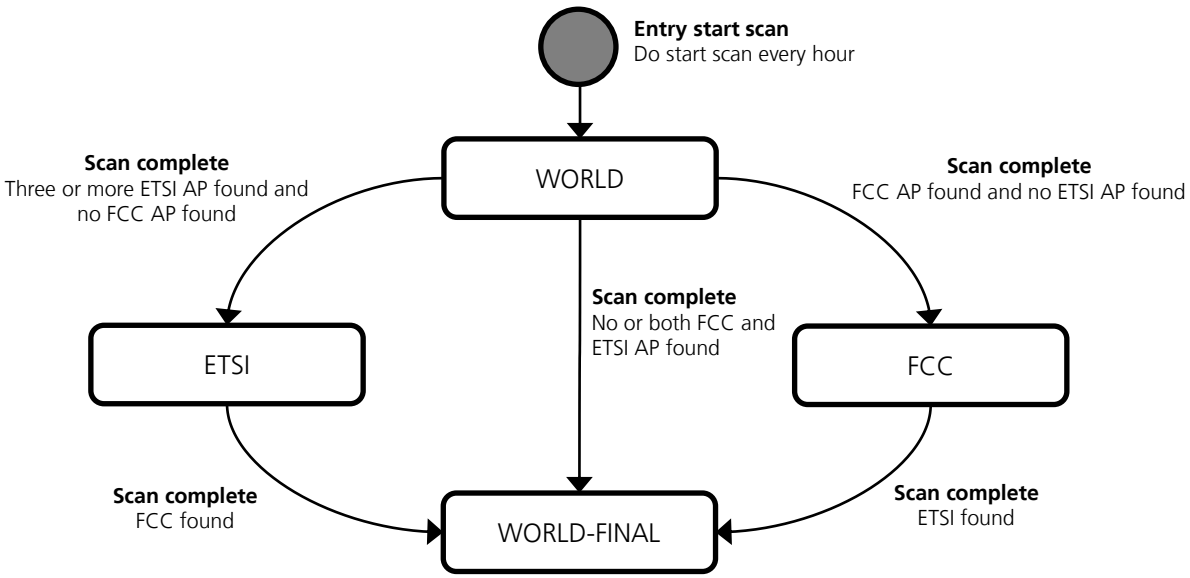

Figure 2: ODIN-W2 series IEEE 802.11d state transition diagram

Initial regulatory domain is WORLD. At start up a scan is initiated to detect beacons containing country information IEs.

If at least one scan result contains country information indicating FCC and no country information indicates ETSI, then the regulatory domain is set to FCC.

If at least three scan results contain country information indicating ETSI and no country information indicates FCC, then the regulatory domain is set to ETSI.

If the scan result contains country information indicating both FCC and country information indicating ETSI, then the regulatory domain is set to WORLD. In the state transition diagram this is the state WORLD_FINAL. This state will not be exited until the device is reset.

A new scan is performed every hour to update the regulatory domain.

If the current regulatory domain is ETSI and at least one scan result contains country information indicating FCC and then the regulatory domain is set to WORLD. In the state transition diagram this is the state WORLD-FINAL. This state is will not be exited until the device is reset.

If the current regulatory domain is FCC and at least one scan result contains country information indicating ETSI and then the regulatory domain is set to WORLD. In the state transition diagram this is the state WORLD-FINAL. This state is will not be exited until the device is reset.

At restart of the device the algorithm is restarted. It is not possible to override the algorithm described by reconfiguration the device.

Regulatory Domain	Band	Tx Channels
WORLD	2.4 GHz	1, 2, 3, 4, 5, 6, 7, 8, 9, 10, 11
	U-NII-1	36, 40, 44, 48
	U-NII-2	52, 56, 60, 64
	U-NII-2e	100, 104, 108, 112, 116, 132, 136, 140
	U-NII-3	-
ETSI	2.4 GHz	1, 2, 3, 4, 5, 6, 7, 8, 9, 10, 11, 12, 13
	U-NII-1	36, 40, 44, 48
	U-NII-2	52, 56, 60, 64
	U-NII-2e	100, 104, 108, 112, 116, 120, 124, 128, 132, 136, 140
	U-NII-3	149, 153, 157, 161, 165

Regulatory Domain	Band	Tx Channels
FCC	2.4 GHz	1, 2, 3, 4, 5, 6, 7, 8, 9, 10, 11
	U-NII-1	36, 40, 44, 48
	U-NII-2	52, 56, 60, 64
	U-NII-2e	100, 104, 108, 112, 116, 132, 136, 140
	U-NII-3	149, 153, 157, 161, 165

Table 3: Channel list for supported regulatory domains

1.8 MAC Addresses

The maximum output power is reduced on some channels depending on regulatory requirements. For example, frequency band edge requirements can limit the output power on channels close to band edges.MAC addresses

The ODIN-W2 module series has four unique consecutive MAC addresses reserved for each module, from which the three first addresses are stored in the configuration memory during production. The first Bluetooth MAC address is available in the Data Matrix on the label (see section 10.1). The last MAC address is not stored in the configuration memory but is reserved for usage with the module.

MAC address	Assignment	Last bits of MAC address	Example
Module 1, address 1	Bluetooth	00	D4:CA:6E:90:04:90
Module 1, address 2	Wi-Fi	01	D4:CA:6E:90:04:91
Module 1, address 3	RMII/Ethernet	10	D4:CA:6E:90:04:92
Module 1, address 4	Reserved	11	D4:CA:6E:90:04:93
Module 2, address 1	Bluetooth	00	D4:CA:6E:90:04:94
Module 2, address 2	Wi-Fi	01	D4:CA:6E:90:04:95
Module 2, address 3	RMII/Ethernet	10	D4:CA:6E:90:04:96
Module 2, address 4	Reserved	11	D4:CA:6E:90:04:97

Table 4: Example MAC address assignment for two modules

2 Interfaces

2.1 Power management

2.1.1 Module supply input (VCC)

The ODIN-W2 series modules must be supplied through the VCC pin by a DC power supply. Voltage must be stable, because during operation the current drawn from VCC can vary significantly based on the power consumption profile of the Bluetooth/Wi-Fi technologies.

2.1.2 Digital I/O interfaces supply output (V_INT)

The ODIN-W2 series modules provide a 1.8 V supply rail output on the V_INT pin, which is internally generated when the module is powered on. The same voltage domain is used internally to supply the generic digital interfaces of the modules. The V_INT supply output can be used instead of an external discrete regulator. See the Electrical specification section for maximum output current.

2.2 Antenna interfaces

The following two different antenna options are available in the ODIN-W2 series:

- ODIN-W260 equipped with dual U.FL. coaxial connectors for external antennas. Different types of external antennas are available and can be used.
- ODIN-W262 equipped with an integrated dual-band antenna

☞ While mounting the unit, ensure that it does not interfere with radio communication. The ODIN-W262 equipped with an internal surface mounted antenna should not be mounted in a metal enclosure. No metal casing or plastics using metal flakes should be used. Avoid metallic based paint or lacquer.

See Antennas chapter for information on the external antennas that can be used and for other RF and antenna design advices. For more info about antenna integration, see ODIN-W2 series System Integration Manual [2].

2.2.1 Antenna connectors and internal antenna

The ODIN-W260 module has two RF antenna U.FL. coaxial connectors with a characteristic impedance of 50 Ω. The main antenna connector supports both Bluetooth and dual-band Wi-Fi. The second (MIMO) antenna connector adds support for 2x2 MIMO 2.4 GHz single band Wi-Fi.

The ODIN-W262 module has an internal dual-band PIFA antenna and supports Bluetooth and dual-band Wi-Fi (SISO).

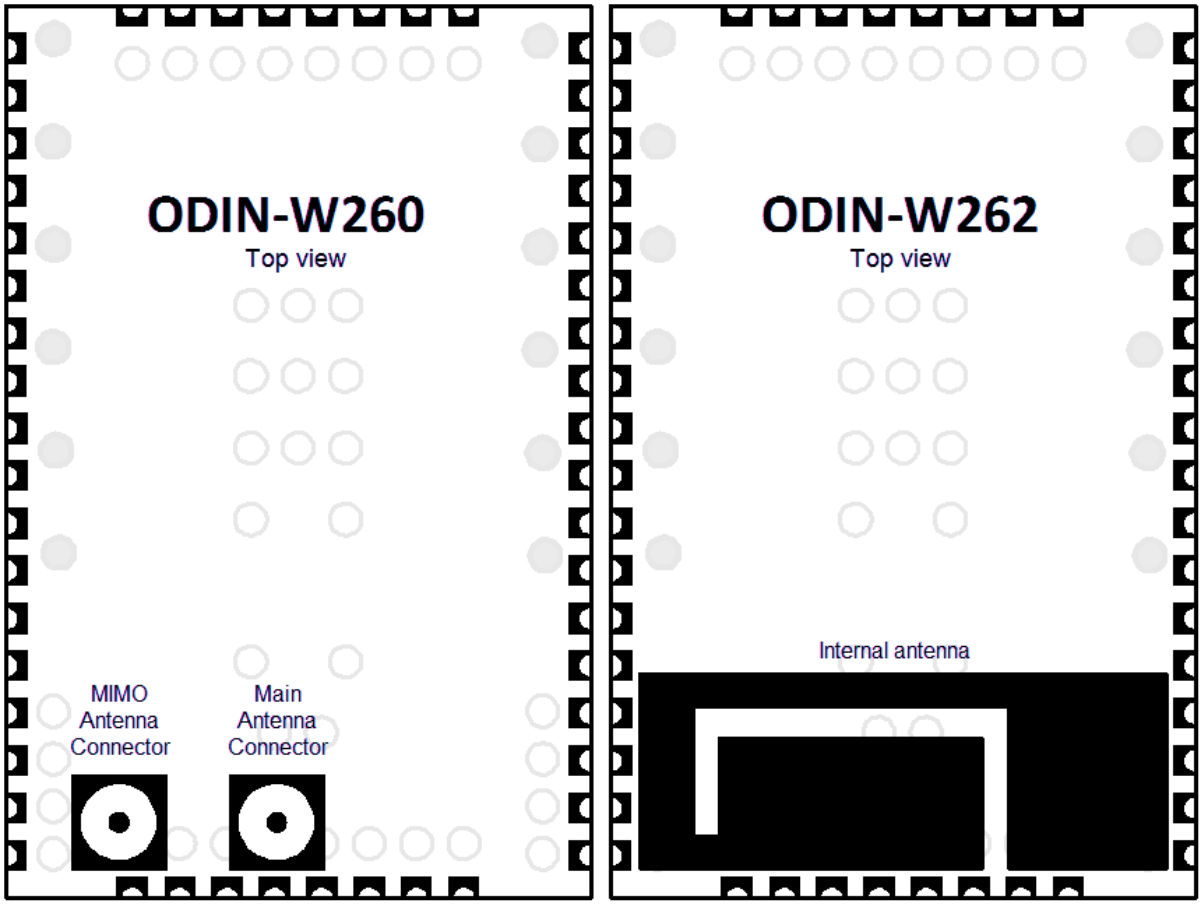

Figure 3: ODIN-W260 with connectors for external antennas and the ODIN-W262 with an internal antenna

2.3 Data communication interfaces

The ODIN-W2 series provides several data communication interfaces which are described below.

2.3.1 UART interface

The ODIN-W2 series modules include a 6-wire UART for communication with an application host processor (AT commands, Data communication and firmware upgrades).

The following UART signals are available:

- Data lines (RXD as input, TXD as output)
- Hardware flow control lines (CTS as input, RTS as output)
- Link status (DTR as output, DSR as input)

It is recommended to use CMOS compatible signal levels. See ODIN-W2 AT Commands Manual [1] and ODIN-W2 series System Integration Manual [2] for more information about the UART interface.

2.3.2 Ethernet interface

The ODIN-W2 series modules include an integrated Ethernet MAC to communicate with other networked nodes over a shared medium. It supports 10/100 Mbit/s communication and can operate in both full- and half-duplex (CSMA/CD).

The Ethernet interface includes:

- RMII either for MAC to PHY or Ethernet MAC to MAC communication.
- SMI for PHY configuration

☞ The IO voltage of the ODIN-W2 is 1.8 V, which means that the RMII interface operates outside the RMII specification v1.2. If the RMII is to be connected to a PHY circuit, then that circuit must support 1.8 V operation. If a direct RMII to RMII connection is used, then a level shifter might be needed depending on the selected host. The selected hardware setup must be verified on the application board to guarantee operation.

2.3.2.1 RMII

The RMII uses 7 signals in total. The interface requires an external 50 MHz clock source either from a compatible PHY chip or an external oscillator. The ODIN-W2 module cannot provide this clock signal by itself.

2.3.2.2 SMI (MDC/MDIO management interface)

The two-wire SMI is used to configure the PHY chips. It uses a clock line and a data line to clock data to and from the PHY chips registers.

3 System functions

3.1 Module power modes

The ODIN-W2 series module does not have an internal low power oscillator (LPO) which is required for low power modes. An external 32.768 kHz LPO signal can be supplied externally via the LPO_CLK pin if low power modes are required.

3.2 Module reset

The ODIN-W2 series modules can be reset (rebooted) in one of the following ways:

- Low level on the RESET_N pin, which is normally set high by an internal pull-up. This causes «hardware" reset of the module. The RESET_N line should be driven by an open drain, open collector or contact switch.
- Using a reset AT command (see the ODIN-W2 AT Commands Manual [1]). This causes «software" reset of the module.

3.3 System IO

The module has the following six different configurable IOs that can be used to indicate different system states or to be used as inputs, thus setting the module in different states:

- SWITCH_0
- RED
- GREEN/SWITCH_1
- BLUE
- UART_DTR
- UART_DSR

See the Pin definition section for more information on the separate IOs. For more information on the use and configuration of the System IOs, see the ODIN-W2 AT Commands Manual [1].

4 Pin definition

4.1 Pin assignment

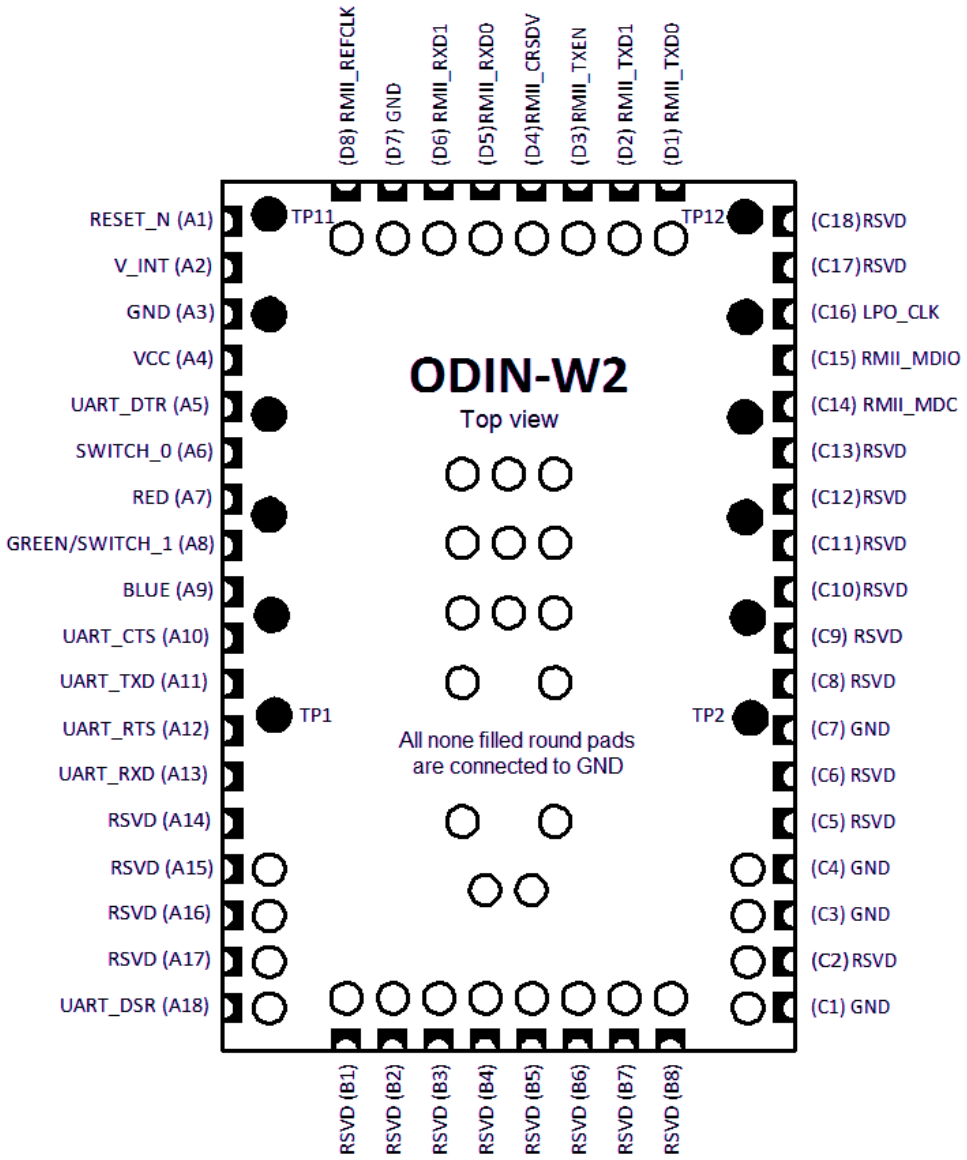

Figure 4: ODIN-W2 series pin assignment

The signals are available on castellation pads on the edge of the PCB. All non-filled round pads are GND pads. Black circular pads are test and production points that should not be used. RSVD = Reserved, do not connect.

No	Name	I/O	Description	Remarks
A1	RESET_N	I	External reset input.	Internal active pull-up to V_INT.
A2	V_INT	O	Regulated output of the internal I/O voltage.	1.8V, maximum output current 100mA. The maximum output current can be limited by the internal current consumption of the V_INT rail. See the Power consumption section.
A3	GND	N/A	Ground	All GND pads must be connected to ground.
A4	VCC	I	Module power supply.	3.0 - 3.6 V power supply.
A5	UART_DTR	O	UART Data Terminal Ready.	Active low. Can also be used as a System IO. See the System IO section for more information. Also see the ODIN-W2 AT Commands Manual [1] for more information about the pin functionality.
A6	SWITCH_0	I	Connect on external signal.	Active low. A secondary function is that the module will restore all factory settings if both the SWITCH_1 and SWITCH_0 signals are low during start up. See the ODIN-W2 AT Commands Manual [1] for more information about the pin functionality.
A7	RED	O	Logic Red LED Signal.	Active low. See the System IO section for more information. Also see the ODIN-W2 AT Commands Manual [1] for more information about the pin functionality.
A8	GREEN/ SWITCH_1	O/I	This signal is multiplexed: GREEN: Logic Green LED Signal. SWITCH_1: Default Serial Settings.	Active low. The GREEN signal is not valid until 500ms after startup. See the System IO section for more information. If the level on this pin is pulled-down during start-up the unit goes back to default serial settings. The SWITCH_1 input is only active during the first 500ms after startup. The module will restore all factory settings if both the SWITCH_1 and SWITCH_0 signals are low during start up. Also see the ODIN-W2 AT Commands Manual [1] for more information about the pin functionality.
A9	BLUE	O	Logic Blue LED Signal.	Active low. See the System IO section for more information. Also see the ODIN-W2 AT Commands Manual [1] for more information about the pin functionality.
A10	UART_CTS	I	UART Clear To Send, Hardware flow control.	Active low.
A11	UART_TXD	O	UART Transmit.	
A12	UART_RTS	O	UART Request To Send, Hardware flow control.	Active low.
A13	UART_RXD	I	UART Receive.	
A14	RSVD	N/A	Reserved pin.	Leave unconnected.
A15	RSVD	N/A	Reserved pin.	Leave unconnected.
A16	RSVD	N/A	Reserved pin.	Leave unconnected.
A17	RSVD	N/A	Reserved pin.	Leave unconnected.
A18	UART_DSR	I	UART Data Set Ready.	Active low. Can also be used as a System IO. See the System IO section for more information. Also see the ODIN-W2 AT Commands Manual [1] for more information about the pin functionality.
B1	RSVD	N/A	Reserved pin.	Leave unconnected.
B2	RSVD	N/A	Reserved pin.	Leave unconnected.
B3	RSVD	N/A	Reserved pin.	Leave unconnected.
B4	RSVD	N/A	Reserved pin.	Leave unconnected.

No	Name	I/O	Description	Remarks
B5	RSVD	N/A	Reserved pin.	Leave unconnected.
B6	RSVD	N/A	Reserved pin.	Leave unconnected.
B7	RSVD	N/A	Reserved pin.	Leave unconnected.
B8	RSVD	N/A	Reserved pin.	Leave unconnected.
C1	GND	N/A	Ground	All GND pads must be connected to ground.
C2	RSVD	N/A	Reserved pin.	Leave unconnected.
C3	GND	N/A	Ground	All GND pads must be connected to ground.
C4	GND	N/A	Ground	All GND pads must be connected to ground.
C5	RSVD	N/A	Reserved pin.	Leave unconnected.
C6	RSVD	N/A	Reserved pin.	Leave unconnected.
C7	GND	N/A	Ground	All GND pads must be connected to ground.
C8	RSVD	N/A	Reserved pin.	Leave unconnected.
C9	RSVD	N/A	Reserved pin.	Leave unconnected.
C10	RSVD	N/A	Reserved pin.	Leave unconnected.
C11	RSVD	N/A	Reserved pin.	Leave unconnected.
C12	RSVD	N/A	Reserved pin.	Leave unconnected.
C13	RSVD	N/A	Reserved pin.	Leave unconnected.
C14	RMII_MDC	O	Management Interface Clock output	According to RMII specification v1.2 with the exception that voltage level is 1.8V.
C15	RMII_MDIO	I/O	Management Interface Data I/O	An external pull-up resistor is required on the bidirectional data signal. According to RMII specification v1.2 with the exception that voltage level is 1.8V.
C16	LPO_CLK	I	Low Power Oscillator clock input	The module requires an external 32.768 kHz clock for low power modes. Leave this pin unconnected if not used as LPO clock input.
C17	RSVD	N/A	Reserved pin.	Leave unconnected.
C18	RSVD	N/A	Reserved pin.	Leave unconnected.
D1	RMII_TXD0	O	Transmit Data output 0	According to RMII specification v1.2 with the exception that voltage level is 1.8V.
D2	RMII_TXD1	O	Transmit Data output 1	According to RMII specification v1.2 with the exception that voltage level is 1.8V.
D3	RMII_TXEN	O	Transmit Enable output	Active high. According to RMII specification v1.2 with the exception that voltage level is 1.8V.
D4	RMII_CRSDV	I	Carrier Sense/Receive Data Valid input	Carrier Sense and Receive Data Valid signals are multiplexed together, multiplexing scheme varies with implementation. According to RMII specification v1.2 with the exception that voltage level is 1.8V.
D5	RMII_RXD0	I	Receive Data input 0	According to RMII specification v1.2 with the exception that voltage level is 1.8V.
D6	RMII_RXD1	I	Receive Data input 1	According to RMII specification v1.2 with the exception that voltage level is 1.8V.
D7	GND	N/A	Ground	All GND pads must be connected to ground.
D8	RMII_REFCLK	I	Reference Clock input	Continuous 50 MHz reference clock input. According to RMII specification v1.2 with the exception that voltage level is 1.8V.

Table 5: ODIN-W2 series pin-out

5 Electrical specification

Stressing the device above one or more of the ratings listed in the Absolute maximum ratings section may cause permanent damage. These are stress ratings only. Operating the module at these or at any conditions other than those specified in the Operating conditions section should be avoided. Exposure to absolute maximum rating conditions for extended periods may affect device reliability.

5.1 Absolute maximum ratings

Symbol	Description	Condition	Min	Maximum	Unit
VCC	Module supply voltage	Input DC voltage at VCC pin	-0.3	5.5*	V
GDI	Generic digital interfaces	Input DC voltage at Generic digital interfaces pins	-0.3	2.2	V
ERS	External reset signal	Input DC voltage at RESET_N pin	-0.3	5.2	V
Tstg	Storage temperature		-40	+85	°C

* 5.5 V up to 10 s cumulative in 7 years, 5 V cumulative to 250 s, 4.8 V cumulative to 2.33 years - all includes charging dips and peaks.

Table 6: Absolute maximum ratings

5.1.1 Maximum ESD

Parameter	Maximum	Unit	Remarks
ESD immunity for antenna connector shielding	6000	V	Contact Discharge according to IEC 61000-4-2
	8000	V	Air Discharge according to IEC 61000-4-2
ESD sensitivity for all pins	1000	V	Human Body Model according to ANSI/ESDA/JEDEC JS-001
	250	V	Charged Device Model according to EIA-JEDEC JESD22-C101E

Table 7: Maximum ESD ratings

5.2 Operating conditions

Operating condition ranges define those limits within which the functionality of the device is guaranteed.

5.2.1 Temperature range

Parameter	Min	Maximum	Unit
Storage temperature	-40	+85	°C
Operating temperature	-40	+85	°C

Table 8: Temperature range

5.2.2 Power supply

Symbol	Parameter	Min	Typ	Maximum	Unit
VCC	Supply voltage	3.00	3.30	3.60	V
V_INT	Output voltage	1.76	1.80	1.84	V
I_{VCC}	Supply voltage current drain[1]	-	-	1.0	A
I_{V_INT}	Output voltage current drain	-	-	100	mA

Table 9: Power supply voltage

[1] See Power consumption section for detailed information.

5.2.3 I/O DC characteristics

Symbol	Parameter		Min	Typ	Maximum	Unit
V_{IL}	LOW level input voltage			0	0.5	V
V_{IH}	HIGH level input voltage		1.31	1.8	2.0	V
V_{OL}	LOW level output voltage			0	0.4	V
V_{OH}	HIGH level output voltage		1.34	1.8		V
I_{IO}	I/O pin sink and source current				4.0*	mA
C_{IO}	I/O pin input capacitance			5		pF
R_{PU}	Internal active pull-up resistance	All IO pins except for UART_RXD	30	40	50	kΩ
		UART_RXD	8	11	15	kΩ
R_{PD}	Internal active pull-down resistance		30	40	50	kΩ

* 8.0 mA is possible but the output voltage level is not guaranteed.

Table 10: I/O DC characteristics

5.2.4 Reset characteristics

Symbol	Parameter	Conditions	Min	Typ	Maximum	Unit
$V_{IL(RESET_N)}$	RESET_N Input low level voltage				0.5	V
$V_{IH(RESET_N)}$	RESET_N Input high level voltage		1.3			V
$V_{hys(RESET_N)}$	RESET_N Schmitt trigger voltage hysteresis			200		mV
$R_{PU(RESET_N)}$	Internal RESET_N pull-up resistance			8		kΩ
C_{RESET_N}	Internal RESET_N capacitance			100		nF
$V_{F(RESET_N)}$	RESET_N Input filtered pulse				100	ns

Table 11: Reset characteristics

5.2.5 LPO clock

The ODIN-W2 series module does not have an internal low power oscillator (LPO) required for low power modes. An LPO can be supplied from an external oscillator if low power modes are required.

Symbol	Parameter	Min	Typ	Maximum	Unit
$LPO_{32.768kHz}$	Input clock frequency		32.768		kHz
	Input slow clock accuracy (Initial + temp + aging)			±150	ppm
Tr/Tf	Input transition time Tr/Tf -10% to 90%			100	ns
	Frequency input duty cycle	20	50	80	%
V_{IH}	Input voltage limits (Square wave, DC-coupled)	1.31		1.8	V
V_{IL}		0		0.5	V
	Input capacitance			10	pF

Table 12: External LPO clock characteristics

5.2.6 Universal asynchronous serial interface (UART)

Symbol	Parameter	Min	Typ	Maximum	Unit
f_{baud}	Baud rate	2400	115200	5.25M	bit/s

Table 13: UART characteristics

5.3 Power consumption

5.3.1 General power consumption

V_{CC} = 3.3 V, T_A = 25 °C unless otherwise specified.

Symbol	Parameter	Conditions	Average	Peak	Unit
I_{DD}	Supply current	Reset	5.2	6.0	mA
		Startup	130	800*	mA
		Idle, not connected, default configuration	30	65	mA
		Idle, not connected, no running services**	30	60	mA
		Stop mode***	TBD	TBD	mA
$I_{DD_MAXIMUM}$	Absolute maximum current drain		-	1.0	A

* Wi-Fi and Bluetooth calibration during the startup phase causes large short current peaks.
** No server running and Bluetooth Connectable and Discoverable turned off.
*** Feature not supported in the current firmware version. See [1] for more information.

Table 14: General current consumption

5.3.2 Wi-Fi 2.4 GHz power consumption

V_{CC} = 3.3 V, T_A = 25 °C unless otherwise specified.

Symbol	Parameter	Conditions	Average	Peak	Unit
I_{DDW24}	Supply current not connected	Scan, 11 channels, 300 ms	100	450	mA
		Idle, Connected DTIM = 1, T_{beacon} = 100 ms	36	100	mA
		Idle, Connected DTIM = 5, T_{beacon} = 100 ms	32	100	mA
I_{DDW24_TX}	Supply current transmitting	802.11b	110	460	mA
		802.11g	110	450	mA
I_{DDW24_RX}	Supply current receiving	802.11b	110	460	mA
		802.11g	110	460	mA

Table 15: Current consumption for Wi-Fi 2.4 GHz

5.3.3 Wi-Fi 5 GHz power consumption

V_{CC} = 3.3 V, T_{amb} = 25 °C

Symbol	Parameter	Conditions	Average	Peak	Unit
I_{DDW5}	Supply current not connected	Scan, 4 channels, 100 ms	100	510	mA
		Idle, Connected DTIM = 1, T_{beacon} = 100 ms	36	100	mA
		Idle, Connected DTIM = 5****, T_{beacon} = 100 ms	32	100	mA
I_{DDW5_TX}	Supply current transmitting	802.11a	250	650	mA
I_{DDW5_RX}	Supply current receiving	802.11a	102	610	mA

Table 16: Current consumption for Wi-Fi 5 GHz

5.3.4 Classic Bluetooth power consumption

V_{CC} = 3.3 V, T_{amb} = 25 °C

Symbol	Parameter	Conditions	Average	Peak	Unit
I_{DDBT_NDNC}	Supply current not connected	Not discoverable, Not connectable	30	65	mA
I_{DDBT_NDC}		Not discoverable, Connectable, scan interval = TBD, scan window = TBD	30	65	mA
I_{DDBT_DC}		Discoverable, Connectable, scan interval = TBD, scan window = TBD	30	65	mA
I_{DDBT_INQ}	Supply current inquiry		47	120	mA
I_{DDBT_IDLE}	Supply current connected	Idle	32	120	mA
I_{DDBT_TX1Mb}		Transmitting	56	120	mA
I_{DDBT_RX1Mb}		Receiving	46	120	mA

Table 17: Current consumption for classic Bluetooth

5.3.5 Bluetooth Low Energy (BLE) power consumption

V_{CC} = 3.3 V, T_{amb} = 25 °C

Symbol	Parameter	Conditions		Average	Peak	Unit
$I_{DDBLE_CD_NC}$	Supply current not connected	Central device	Idle	29	65	mA
$I_{DDBLE_CD_INQ}$			Low Energy Inquiry	48	80	mA
$I_{DDBLE_PD_NC}$		Peripheral device	Idle	29	65	mA
$I_{DDBLE_PD_ADV}$			Advertising	29	65	mA
$I_{DDBLE_CD_IDLE}$	Supply current connected	Central device	Idle	44	100	mA
$I_{DDBLE_CD_TX}$			Transmitting	45	100	mA
$I_{DDBLE_CD_RX}$			Receiving	45	100	mA
$I_{DDBLE_PD_IDLE}$		Peripheral device	Idle	29	100	mA
$I_{DDBLE_PD_TX}$			Transmitting	30	100	mA
$I_{DDBLE_PD_RX}$			Receiving	30	100	mA

Table 18: Current consumption for Bluetooth Low Energy (BLE)

5.4 RF characteristics

5.4.1 Wi-Fi receiver characteristics 2.4 GHz

V_{CC} = 3.3 V, T_{amb} = 25 °C

Parameter	Conditions	Antenna port	Channel / Freq [MHz]	IEEE limit	Typ*	Unit
Receive sensitivity	802.11b, Rate = 1 Mbit/s, PER ≤ 8%	MAIN port	6 / 2437	-76	-95	dBm
	802.11b, Rate = 11 Mbit/s, PER ≤ 8%	MAIN port	6 / 2437	-76	-86	dBm
	802.11g, Rate = 6 Mbit/s, PER ≤ 10%	MAIN port	6 / 2437	-82	-90	dBm
	802.11g, Rate = 54 Mbit/s, PER ≤ 10%	MAIN port	6 / 2437	-65	-72	dBm

* Measured conducted on ODIN-W260, measurement tolerance ±1.0 dB.

Table 19: Receiver characteristics for 2.4 GHz Wi-Fi

5.4.2 Wi-Fi receiver characteristics 5 GHz

V_{CC} = 3.3 V, T_{amb} = 25 °C

Parameter	Conditions	Channel / Freq [MHz]	IEEE limit	Typ*	Unit
Receive sensitivity	802.11a, Rate = 6 Mbit/s, PER ≤ 10%	36 / 5180	-82	-90	dBm
		100 / 5500	-82	-90	dBm
		140 / 5825	-82	-90	dBm
	802.11a, Rate = 48 Mbit/s, PER ≤ 10%	36 / 5180	-66	-72	dBm
		100 / 5500	-66	-72	dBm
		140 / 5825	-66	-72	dBm

* Measured conducted on ODIN-W260, measurement tolerance ±1.0 dB.

Table 20: Receiver characteristics for 5 GHz Wi-Fi

5.4.3 Wi-Fi transmitter characteristics 2.4 GHz

V_{CC} = 3.3 V, T_{amb} = 25 °C

Parameter	Conditions	Antenna port	IEEE EVM limit	EVM*	Typ*	Unit
Transmitting output power	802.11b, Rate = 1 Mbit/s	MAIN port	-14	-28	11.2	dBm
	802.11b, Rate = 11 Mbit/s	MAIN port	-14	-26	11.3	dBm
	802.11g, Rate = 6 Mbit/s	MAIN port	-5	-21	14.2	dBm
	802.11g, Rate = 54 Mbit/s	MAIN port	-25	-29	12.1	dBm

* Measured conducted on ODIN-W260 with maximum output power, measurement tolerance ±1.0 dB.
Regional power limitation can reduce the maximum output power (especially on channels close to band edges).

Table 21: Wi-Fi transmitter characteristics 2.4 GHz

5.4.4 Wi-Fi transmitter characteristics 5 GHz

V_{CC} = 3.3 V, T_{amb} = 25 °C

Parameter	Conditions	Channel / Freq [MHz]	IEEE EVM limit	EVM*	Typ*	Unit
Transmitting output power	802.11a, Rate = 6 Mbit/s	40 / 5180	-5	-26	12.8	dBm
		100 / 5500	-5	-25	11.8	dBm
		140 / 5700	-5	-18	13.7	dBm
	802.11a, Rate = 54 Mbit/s	40 / 5180	-25	-26	12.7	dBm
		100 / 5500	-25	-25	12.1	dBm
		140 / 5700	-25	-25	13.2	dBm

* Measured conducted on ODIN-W260 with maximum output power, measurement tolerance ±1.0 dB.
Regional power limitation can reduce the maximum output power (especially on channels close to band edges).

Table 22: Wi-Fi transmitter characteristics 5 GHz

5.4.5 Classic Bluetooth receiver characteristics

V_{CC} = 3.3 V, T_{amb} = 25 °C

Parameter	Conditions	Limit	Typ*	Min*	Unit
Rx sensitivity	BR 1Mbit, GFSK, BER ≤ 0.1%	-70	-90		dBm
	EDR 2Mbit, π/4-DQPSK, BER ≤ 0.007%	-70	-90		dBm
	EDR 3Mbit, 8DPSK , BER ≤ 0.007%	-70	-83		dBm
Maximum input level	BR 1Mbit, GFSK, BER ≤ 0.1%	-20		-6	dBm
	EDR 2Mbit, π/4-DQPSK, BER ≤ 0.1%	-20		-10	dBm
	EDR 3Mbit, 8DPSK , BER ≤ 0.1%	-20		-10	dBm

* Measured conducted on ODIN-W260, measurement tolerance ±1.0 dB.

Table 23: Classic Bluetooth receiver sensitivity

5.4.6 Bluetooth Low Energy receiver sensitivity

V_{CC} = 3.3 V, T_{amb} = 25 °C

Parameter	Conditions	Limit	Typ*	Min*	Unit
Rx sensitivity	PER ≤ 30.8%	-70	-95		dBm
Maximum input level	PER ≤ 30.8%	-10		-6	dBm

* Measured conducted on ODIN-W260, measurement tolerance ±1.0 dB.

Table 24: Bluetooth Low Energy receiver sensitivity

5.4.7 Classic Bluetooth transmitter characteristics

V_{CC} = 3.3 V, T_{amb} = 25 °C

Parameter	Conditions	Typ*	Max*	Unit
Transmitting output power	BR 1Mbit, GFSK	11.0	11.4	dBm
	EDR 2Mbit, π/4-DQPSK	6.5	7.0	dBm
	EDR 3Mbit, 8DPSK	6.5	7.0	dBm

* Measured conducted on ODIN-W260, measurement tolerance ±1.0 dB.

Table 25: Bluetooth transmitter output power

5.4.8 Bluetooth Low Energy transmitter characteristics

(V_{CC} = 3.3 V, T_{amb} = 25 °C

Parameter	Test conditions	Typ*	Max*	Unit
Transmitting output power		6.0	7.0	dBm

* Measured conducted on ODIN-W260, measurement tolerance ±1.0 dB.

Table 26: Bluetooth Low Energy transmitter characteristics

6 Mechanical specifications

6.1 Dimensions

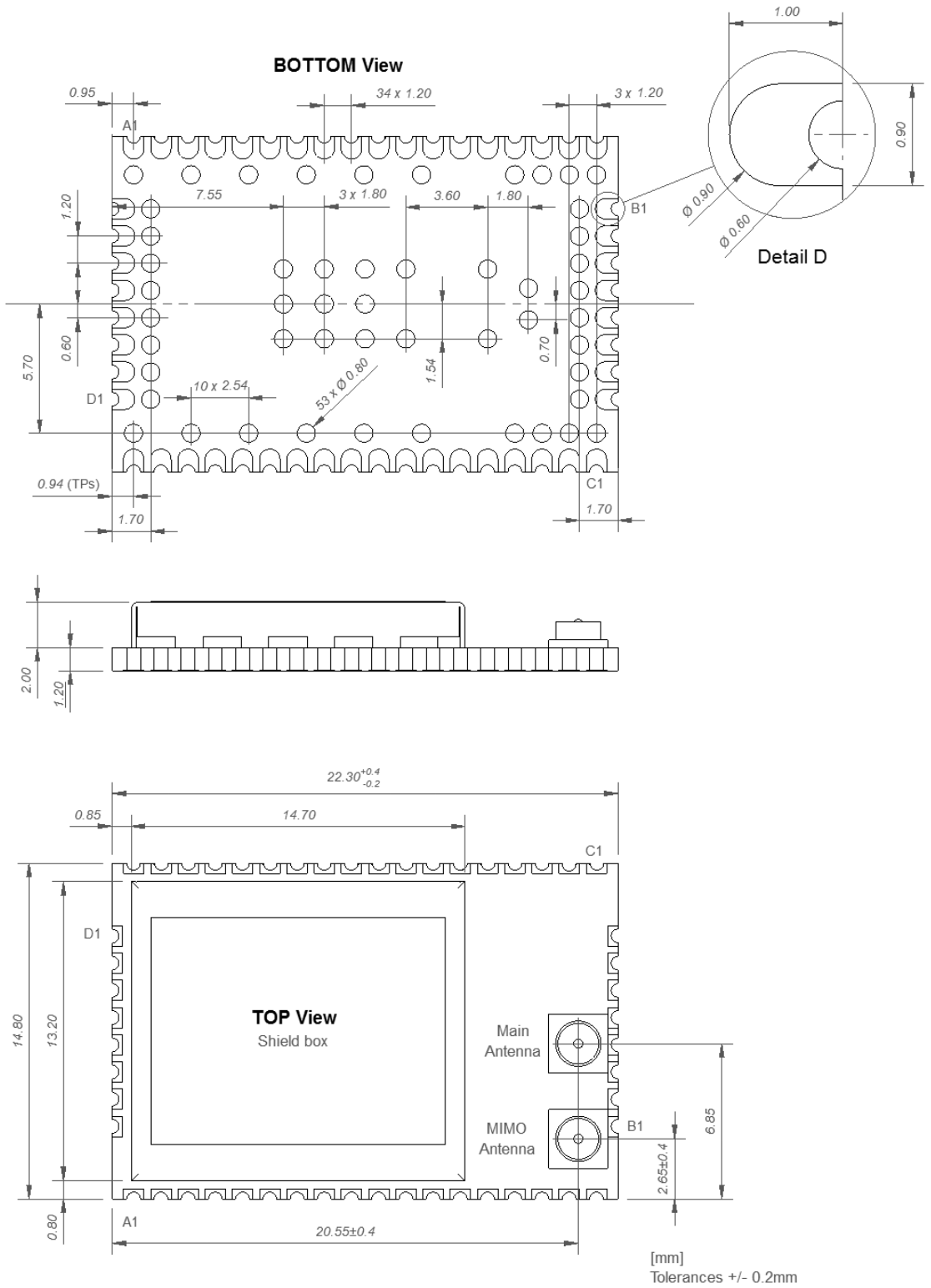

Figure 5: Physical dimensions of ODIN-W260

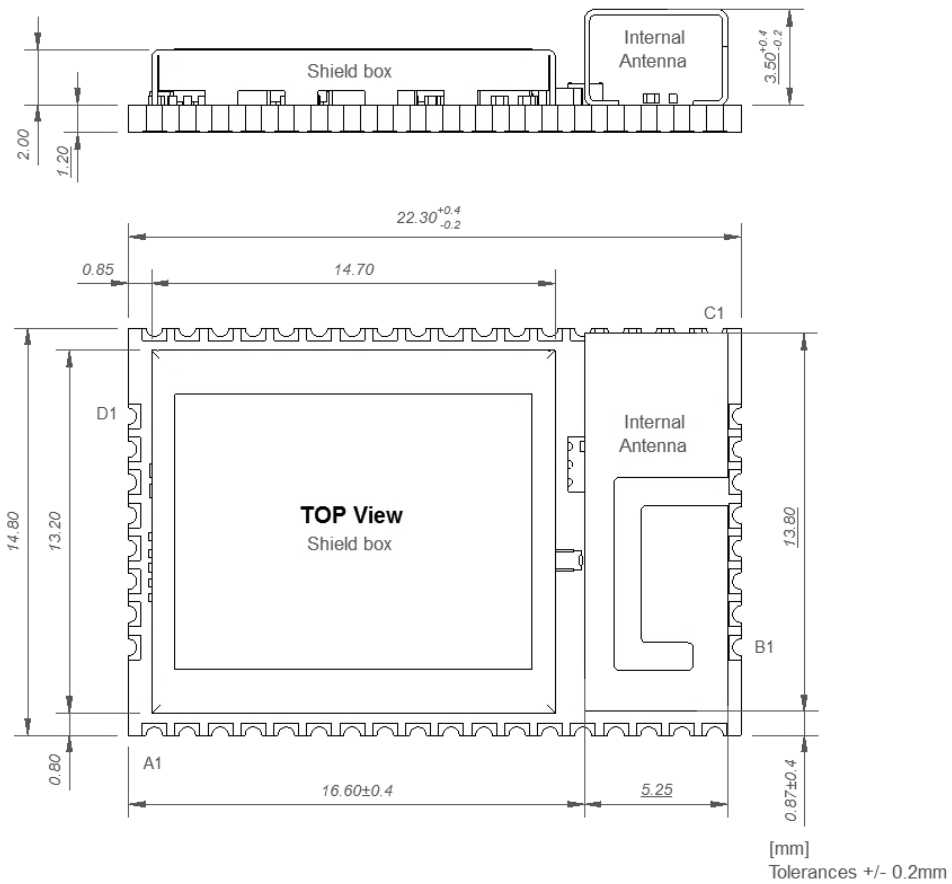

Figure 6: Physical dimensions of ODIN-W262

6.2 Module weight

Module	Typ	Unit
ODIN-W260	2	g
ODIN-W262	2	g

Table 27: Module weight

7 Qualification and approvals

7.1 Compliance with RoHS directive

The ODIN-W2 series modules comply with the "Directive 2011/65/EU of the European Parliament and the Council on the Restriction of Use of certain Hazardous Substances in Electrical and Electronic Equipment" (RoHS).

No natural rubbers, hygroscopic materials, or materials containing asbestos are employed.

7.2 European Union regulatory compliance

The ODIN-W2 module conforms to the product specifications listed in Table 28. See the ODIN-W2 Declaration of Conformity [4] for more information.

	Category	Standard
R&TTE Directive 1999/5/EC	Effective use of frequency spectrum	EN 300 328 V1.9.1
		EN 301 893 V1.8.1
		EN 300 440-1
		EN 300 440-2
	EMC	EN 301 489-1
		EN 301 489-17
	Health and safety	EN 60950-1 / IEC 60950-1
		EN 62311
		EN 62479
Medical Electrical Equipment		EN 60601-1-2
Prevention (RoHS Article 4.1)		EN 50581

Table 28: ODIN-W2 ETSI conformity

7.3 Safety Compliance

In order to fulfill the safety standard EN 60950-1, the unit must be supplied by a limited power source.

7.4 FCC and IC Compliance

7.4.1 IC compliance

This device complies with Industry Canada license-exempt RSS standard(s).

Operation is subject to the following two conditions:

1. this device may not cause interference, and
2. this device must accept any interference, including interference that may cause undesired operation of the device.

Under Industry Canada regulations, this radio transmitter may only operate using an antenna of a type and maximum (or lesser) gain approved for the transmitter by Industry Canada. To reduce potential radio interference to other users, the antenna type and its gain should be so chosen that the equivalent isotropically radiated power (e.i.r.p.) is not more than that necessary for successful communication.

The device for operation in the band 5150-5250 MHz is only for indoor use to reduce the potential for harmful interference to co-channel mobile satellite systems;

The maximum antenna gain permitted for devices in the bands 5250-5350 MHz and 5470-5725 MHz shall comply with the e.i.r.p. limit; and

The maximum antenna gain permitted for devices in the band 5725-5825 MHz shall comply with the e.i.r.p. limits specified for point-to-point and non point-to-point operation as appropriate.

Operation in the 5600-5650 MHz band is not allowed in Canada. High-power radars are allocated as primary users (i.e. priority users) of the bands 5250-5350 MHz and 5650-5850 MHz and that these radars could cause interference and/or damage to LE-LAN devices.

This equipment complies with IC RSS-102 radiation exposure limits set forth for an uncontrolled environment. This equipment should be installed and operated with minimum distance 20 cm between the radiator & your body.

7.4.2 Conformité aux normes d'IC

Cet appareil est conforme à la(aux) norme(s) RSS sans licence d'Industry Canada.

Son utilisation est soumise aux deux conditions suivantes :

1. Cet appareil ne doit pas causer d'interférences et
2. il doit accepter toutes interférences reçues, y compris celles susceptibles d'avoir des effets indésirables sur son fonctionnement.

Conformément aux réglementations d'Industry Canada, cet émetteur radio ne peut fonctionner qu'à l'aide d'une antenne dont le type et le gain maximal (ou minimal) ont été approuvés pour cet émetteur par Industry Canada. Pour réduire le risque d'interférences avec d'autres utilisateurs, il faut choisir le type d'antenne et son gain de telle sorte que la puissance isotrope rayonnée équivalente (p.i.r.e) ne soit pas supérieure à celle requise pour obtenir une communication satisfaisante.

Le dispositif de fonctionnement dans la bande 5150-5250 MHz est réservé à une utilisation en intérieur pour réduire le risqué d'interférences nuisibles à la co-canal systèmes mobiles par satellite.

Le gain d'antenne maximal autorisé pour les appareils dans les bandes 5250-5350 MHz et 5470-5725 MHz doit se conformer à la pire limite, et

le gain d'antenne maximal autorisé pour les appareils dans la bande 5725-5825 MHz doivent être conformes avec le pire limites spécifiées à point-à-ponctuelles et non point-à-point de fonctionnement selon qu'il convient.

Opération dans la bande 5600-5650 MHz n'est pas autorisée au Canada. Haute puissance radars sont désignés comme utilisateurs principaux (c.-àutilisateurs prioritaires) des bandes 5250-5350 MHz et 5650-5850 MHz et que ces radars pourraient causer des interférences et / ou des dommages à dispositifs LAN-EL.

Cet équipement respecte les limites d'exposition aux rayonnements IC RSS-102 définies pour un environnement non contrôlé. Il doit être installé et utilisé en maintenant une distance minimum de 20 cm entre le radiateur et votre corps.

7.4.3 FCC statement

This device complies with Part 15 of the FCC Rules. Operation is subject to the following two conditions:

1. this device may not cause harmful interference, and
2. this device must accept any interference received, including interference that may cause undesired operation.

This equipment has been tested and found to comply with the limits for a Class B digital device, pursuant to Part 15 of the FCC Rules. These limits are designed to provide reasonable protection against harmful interference in a residential installation. This equipment generates, uses and can radiate radio frequency energy and, if not installed and used in accordance with the instructions, may cause harmful interference to radio communications. However, there is no guarantee that interference will not occur in a particular installation. If this equipment does cause harmful interference to radio or television reception, which can be determined by turning the equipment off and on, the user is encouraged to try to correct the interference by one or more of the following measures:

- Reorient or relocate the receiving antenna.
- Increase the separation between the equipment and receiver.
- Connect the equipment into an outlet on a circuit different from that to which the receiver is connected.

Consult the dealer or an experienced radio/TV technician for help.

The ODIN-W2 module is for OEM integrations only. The end-user product will be professionally installed in such a manner that only the authorized antennas are used.

Any changes or modifications NOT explicitly APPROVED by u-blox could cause the module to cease to comply with FCC rules part 15, and thus void the user's authority to operate the equipment.

7.4.3.1 Cautions

Any changes or modifications could cause the module to cease to comply with FCC rules part 15 thus void the user's authority to operate the equipment.

§15.407 statement; in case of absence of information to transmit or operational failure the module types ODIN-W2 will automatically discontinue transmission.

7.4.4 Labeling requirements for end product

For an end product using the ODIN-W2 modules there must be a label containing, at least, the following information:

This device contains FCC ID: PVH0965 IC: 5325A-0965

The label must be affixed on an exterior surface of the end product such that it will be visible upon inspection in compliance with the modular approval guidelines developed by the FCC.

In accordance with 47 CFR § 15.19 the end product shall bear the following statement in a conspicuous location on the device:

"This device complies with Part 15 of the FCC Rules.

Operation is subject to the following two conditions;

(1) this device may not cause harmful interference, and

(2) this device must accept any interference received, including interference that may cause undesired operation."

When the device is so small or for such use that it is not practicable to place the statement above on it, the information shall be placed in a prominent location in the instruction manual or pamphlet supplied to the user or, alternatively, shall be placed on the container in which the device is marketed.

In case, where the final product will be installed in locations where the end-user is not able to see the FCC ID and/or this statement, the FCC ID and the statement shall also be included in the end-product manual.

7.4.4.1 IC requirement

If the end product using the ODIN-W2 module is able to operate in the band 5150-5250 MHz within Canada (IC) it is only allowed to be used indoor to reduce the potential for harmful interference to co-channel mobile satellite systems. The label of the end product MUST in this case be marked with the text “For indoor use only”:

This device contains FCC ID: PVH0965 IC: 5325A-0965 For indoor use only

When the device is so small or for such use that it is not practicable to place the statement above on it, the information shall be placed in a prominent location in the instruction manual or pamphlet supplied to the user or, alternatively, shall be placed on the container in which the device is marketed. However, the FCC ID label including the "For indoor use only" text must be displayed on the device.

7.5 Japan radio equipment compliance

The ODIN-W2 module complies with the Japanese Technical Regulation Conformity Certification of Specified Radio Equipment (ordinance of MPT N°. 37, 1981), Article 2, Paragraph 1:

- Item 19 "2.4 GHz band wide band low power data communication system"
- Item 19-3 "Low power data communications system in the 5.2/5.3 GHz band"
- Item 19-3-2 "Low power data communications system in the 5.6 GHz band"

The ODIN-W2 module is restricted on the Japanese market to be used indoors only if the product is operating in the 5.2/5.3 GHz band. The information: "Indoor use only" translated into Japanese (この製品は屋内においてのみ使用可能です) must be visible:

- on the certified end product.
- on the product package in which the end product is marketed.
- in the users / installation manual of the end product.

The indoor usage information is recommended to be printed close to the Giteki mark but it is also permitted to place that information on another prominent position.

☞ The ODIN-W2 MIC certification number is 204-510009.

☞ The very small size of the module makes it not reasonable to fit the GITEKI mark and certification number onto the module label. Instead the Giteki mark and certification number is available in the ODIN-W2 series System Integration Manual [2] and on the ODIN-W2 package.

When a product integrated with an ODIN-W2 module is placed on the Japanese market, either must:

- the ODIN-W2 module be affixed with a label with the Giteki marking below.
  In this case is it recommended that the product is marked with "Contains MIC ID: R 204-510009".
- the product be affixed with a label with the Giteki marking below. The marking must be visible for inspection.

204-510009

この製品は屋内においてのみ使用可能です

Figure 7: Giteki mark, R and the ODIN-W2 MIC certification number. The "Indoor use only" information translated into Japanese below is mandatory if the product is operating in the 5.2/5.3 GHz band.

The recommended size of the Giteki mark is Ø5.0 mm but the minimum size is Ø3.0 mm.

The end product holder shall also include a copy of the Japan Radio Certificate to the end product technical documentation. See the Contact information in the end of this document for a copy of the Radio Certificate.

7.6 SRRC China Radio Transmission Equipment Type Approval

Only the ODIN-W262 is modular approved for integration in an end product on the Chinese market.

In accordance with the provisions on the Radio Regulations of the People's Republic of China, the ODIN-W262 module with the product name ODIN-W262 conforms to the provisions with its CMIIT ID: 2016AJ1533.

7.6.1 ODIN-W262 labeling requirements for end product

The following requirements apply for end products that are sold in China:

- Label with CMIIT ID number of the module is required to be placed on the end product.
- The following statement must be included in Chinese in the Chinese user manual:

  CMIIT ID: 2016AJ1533
  (This device contains certified RF module which certificate number is CMIIT ID: 2016AJ1533)

7.7 NCC Taiwan compliance

7.7.1 Taiwan NCC Warning Statement

- 經型式認證合格之低功率射頻電機，非經許可，公司、商號或使用者均不得擅自變更頻率、 加大功率或變更原設計之特性及功能。
- 低功率射頻電機之使用不得影響飛航安全及干擾合法通信；經發現有干擾現象時，應立即停用，並改善至無干擾時方得繼續使用。前項合法通信，指依電信法規定作業之無線電通信。低功率射頻電機須忍受合法通信或工業、科學及醫療用電波輻射性電機設備之干擾。

Statement translation:

- Without permission granted by the NCC, any company, enterprise, or user is not allowed to change frequency, enhance transmitting power or alter original characteristic as well as performance to a approved low power radio-frequency devices.
- The low power radio-frequency devices shall not influence aircraft security and interfere legal communications; If found, the user shall cease operating immediately until no interference is achieved. The said legal communications means radio communications is operated in compliance with the Telecommunications Act. The low power radio-frequency devices must be susceptible with the interference from legal communications or ISM radio wave radiated devices.

7.7.2 ODIN-W260 labeling requirements for end product

When a product integrated with an ODIN-W260 module is placed on the Taiwan market, the product must be affixed with a label marking as shown below. The label can use wording such as the following:

Contains Transmitter Module

內含發射器模組: CCAJ16LP1230T0

or any similar wording that expresses the same meaning may be used. The marking must be visible for inspection.

7.7.3 ODIN-W262 labeling requirements for end product

When a product integrated with an ODIN-W262 module is placed on the Taiwan market, the product must be affixed with a label marking as shown below. The label can use wording such as the following:

Contains Transmitter Module

內含發射器模組: CCAJ16LP1240T0

or any similar wording that expresses the same meaning may be used. The marking must be visible for inspection.

7.8 Korean KCC certification

The ODIN-W2 series modules are certified by the Korea Communications Commission (KCC).

The KCC IDs for ODIN-W260 and ODIN-W262 are provided below:

- ODIN-W260 module: MSIP-CRM-ULX-ODIN-W260
- ODIN-W262 module: MSIP-CRM-ULX-ODIN-W262

7.9 Australia and New Zealand regulatory compliance

The ODIN-W260 and ODIN-W262 modules are compliant with the standards made by the Australian Communications and Media Authority (ACMA).

The modules are compliant with AS/NZS 4268:2012 standard – Radio equipment and systems – Short range devices – Limits and methods of standard measurement.

For more information on Australia compliance, refer to the Australian Communications and Media Authority web site http://www.acma.gov.au/.

For more information on New Zealand compliance, refer to the New Zealand Radio Spectrum Management Group web site www.rsm.govt.nz.

7.10 ANATEL Brazil compliance

When a product containing a ODIN-W2 module is placed on the Brazilian market, the product must be affixed with a label or marking containing the Anatel logo, ODIN-W2 Homologation number: 03883-16-05903 and a statement claiming that the device may not cause harmful interference but must accept it (Resolution No 506).

ANATEL
03883-16-05903

"Este equipamento opera em caráter secundário, isto é, não tem direito a proteção contra interferência prejudicial, mesmo de estações do mesmo tipo, e não pode causar interferência a sistemas operando em caráter primário."

Statement translation:

"This equipment operates on a secondary basis and, consequently, must accept harmful interference, including from stations of the same kind, and may not cause harmful interference to systems operating on a primary basis."

When the device is so small or for such use that it is not practicable to place the statement above on it, the information shall be placed in a prominent location in the instruction manual or pamphlet supplied to the user or, alternatively, shall be placed on the container in which the device is marketed.

In case, where the final product will be installed in locations where the end-user is not able to see the Anatel logo, ODIN-W2 Homologation number and/or this statement, the Anatel logo, ODIN-W2 Homologation number and the statement shall also be included in the end-product manual.

7.11 Bluetooth qualification information

The ODIN-W2 series modules have been qualified according to the Bluetooth 4.0 specification.

The ODIN-W2 series module is Bluetooth listed with Declaration ID D028207. For an end product with ODIN-W2 integrated is no further qualification required. If the end product is Bluetooth listed shall the QD IDs listed in Table 29 be included in the product listing.

Product type	QD ID	Listing Date
Controller Subsystem	71681	28-Aug-2015
Host Subsystem	40911	29-Jan-2013

Table 29: ODIN-W2 Bluetooth QD ID

☞ For information how to list and declare your product see the ODIN-W2 series System Integration Manual [2].

8 Antennas

This chapter gives an overview of the different external antennas that can be fitted to the module.

This radio transmitter IC: 5325A-0965 has been approved by Industry Canada to operate with the antenna types listed below with the maximum permissible gain and required antenna impedance for each antenna type indicated. Antenna types not included in this list, having a gain greater than the maximum gain indicated for that type, are strictly prohibited for use with this device.

Cet émetteur radio IC: 5325A-0965 été approuvé par Industry Canada pour fonctionner avec les types d'antenne énumérés ci-dessous avec le gain maximum autorisé et l'impédance nécessaire pour chaque type d'antenne indiqué. Les types d'antenne ne figurant pas dans cette liste et ayant un gain supérieur au gain maximum indiqué pour ce type-là sont strictement interdits d'utilisation avec cet appareil.

For each antenna, the "Approvals" field defines in which test reports the antenna is included. Definitions of the «Approvals» field are:

- FCC - The antenna is included in the FCC test reports and thus approved for use in countries that accept the FCC radio approvals, primarily US.
- IC - The antenna is included in the IC (Industrie Canada) test reports and thus approved for use in countries that accept the IC radio approvals, primarily Canada.
- R&TTE - The antenna is included in the R&TTE test reports and thus approved for use in countries that accept the R&TTE radio approvals, primarily the European countries.
- MIC - The antenna is included in the Japanese government affiliated MIC test reports and thus approved for use in the Japanese market.
- NCC - The antenna is included in the Taiwan NCC test reports and thus approved for use in Taiwan.
- KCC - The antenna is included in the Korea KCC test reports and thus approved for use in Korea.

In general, antennas with SMD connection, Reverse Polarity SMA connector or U.FL connector are included in FCC, IC, R&TTE, NCC and MIC radio tests. The antennas with SMA connector are included in R&TTE, NCC and MIC radio tests but not in the FCC or IC due to FCC/IC regulations. Only dual band antennas are allowed to be used on the main antenna port (see section 2.2.1) in Korea.

Only the ODIN-W262 with internal antenna is modular approved for the China market. The ODIN-W260 with antenna connectors to be used with the external antennas is not approved to be used on the China market.

The external antennas are connected to the board through U.FL connectors. Some antennas are connected directly to the U.FL connector of the board while some are connected using an SMA or reversed polarity SMA connector through a short U.FL to SMA or reversed polarity SMA adapter cable.

8.1 Antenna accessories

Name	U.FL to SMA adapter cable
Connector	U.FL and SMA jack (outer thread and pin receptacle)
Impedance	50 Ω
Minimum cable length	120 mm
Minimum cable loss	0.5 dB, The cable loss must be above the minimum cable loss to meet the regulatory requirements
Comment	The SMA connector can be mounted in a panel
Approval	R&TTE, MIC, NCC and KCC

Name	U.FL to Reverse Polarity SMA adapter cable
Connector	U.FL and Reverse Polarity SMA jack (outer thread and pin)
Impedance	50 Ω
Minimum cable length	120 mm
Minimum cable loss	0.5 dB, The cable loss must be above the minimum cable loss to meet the regulatory requirements
Comment	The Reverse Polarity SMA connector can be mounted in a panel
Approval	FCC, IC, R&TTE, MIC, NCC and KCC

8.2 Approved antennas

8.2.1 Single band antennas

Ex-IT 2400 RP-SMA 28-001	
Manufacturer	ProAnt
Polarization	Vertical
Gain	+3.0 dBi
Impedance	50 Ω
Size	Ø 12.0 x 28.0 mm
Type	Monopole
Connector	Reverse Polarity SMA plug (inner thread and pin receptacle). To be mounted on the U.FL to Reverse Polarity SMA adapter cable.
Comment	An SMA version antenna is also available but not recommended for use (Ex-IT 2400 SMA 28-001).
Approval	FCC, IC, R&TTE, MIC, NCC and KCC*

Ex-IT 2400 MHF 28	
Manufacturer	ProAnt
Polarization	Vertical
Gain	+2.0 dBi
Impedance	50 Ω
Size	Ø 12.0 x 28.0 mm
Type	Monopole
Cable length	100 mm
Connector	U.FL. connector
Comment	To be mounted on the U.FL connector on the PCB.
Approval	FCC, IC, R&TTE, MIC, NCC and KCC*

Ex-IT 2400 RP-SMA 70-002	
Manufacturer	ProAnt
Polarization	Vertical
Gain	+3.0 dBi
Impedance	50 Ω
Size	Ø 10 x 83 mm
Type	Monopole
Connector	Reverse Polarity SMA plug (inner thread and pin receptacle)
Comment	To be mounted on the U.FL to Reverse Polarity SMA adapter cable (cB-ACC-38). An SMA version antenna is also available but not recommended for use (Ex-IT 2400 SMA 70-002).
Approval	FCC, IC, R&TTE, MIC, NCC and KCC*

Ex-IT 2400 MHF 70-001	
Manufacturer	ProAnt
Polarization	Vertical
Gain	+3.0 dBi
Impedance	50 Ω
Size	Ø 9.4 x 70.5 mm
Type	Monopole
Cable length	100 mm
Connector	U.FL. connector
Comment	To be mounted on the U.FL connector on the PCB.
Approval	FCC, IC, R&TTE, MIC, NCC and KCC*

InSide-2400	
Manufacturer	ProAnt
Gain	+3.0 dBi
Impedance	50 Ω
Size	27 x 12 mm (triangular)
Type	Patch
Cable length	100 mm
Connector	U.FL. connector
Comment	To be mounted on the U.FL connector on the PCB.
Approval	FCC, IC, R&TTE, MIC, NCC and KCC*

FlatWhip-2400	
Manufacturer	ProAnt
Gain	+3.0 dBi
Impedance	50 Ω
Size	Ø 50.0 x 30.0 mm
Type	Monopole
Connector	SMA plug (inner thread and pin)
Comment	To be mounted on the U.FL to SMA adapter cable.
Approval	R&TTE, MIC, NCC and KCC*

Outside-2400	
Manufacturer	ProAnt
Gain	+3.0 dBi
Impedance	50 Ω
Size	36.0 x 18.0 x 16.0 mm
Type	Patch
Cable length	70 mm
Connector	U.FL. connector
Comment	To be mounted on the U.FL connector on the PCB.
Approval	FCC, IC, R&TTE, MIC, NCC and KCC*

* In Korea is only dual band antennas allowed on the main antenna port and 2.4 GHz single band antennas are only allowed on the MIMO antenna port.

8.2.2 Dual-band antennas

InSide-WLAN	
Manufacturer	ProAnt
Gain	+3.0 dBi
Impedance	50 Ω
Size	27 x 12 mm (triangular)
Type	Patch
Cable length	100 mm
Connector	U.FL. connector
Comment	Dual-band (2.4 GHz/ 5 GHz) antenna to be mounted on the U.FL connector on the PCB.
Approval	FCC, IC, R&TTE, MIC, NCC and KCC

InSide-WLAN Square	
Manufacturer	ProAnt
Gain	+3.0 dBi
Impedance	50 Ω
Size	24x22x1 mm with mounting hole
Type	Patch
Cable length	100 mm
Connector	U.FL. connector
Comment	Dual-band (2.4 GHz / 5 GHz) antenna to be mounted on the U.FL connector on the PCB.
Approval	FCC, IC, R&TTE, MIC, NCC and KCC

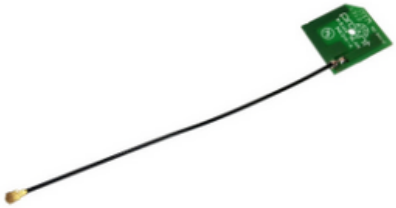

Ex-IT WLAN RPSMA / Ex-IT WLAN SMA	
Manufacturer	ProAnt
Type	½ wave dipole dual-band antenna
Polarization	Vertical
Gain	+3 dBi
Impedance	50 Ω
Size	107 mm (Straight)
Type	Monopole
Connector	• Reverse Polarity SMA plug (inner thread and pin receptacle) • SMA plug (inner thread and pin)
Comment	To be mounted on the U.FL to SMA or reverse polarity SMA adapter cable.
Approval	FCC, IC, R&TTE, MIC, NCC and KCC

9 Product handling and soldering

9.1 Packaging

The ODIN-W2 series modules are delivered as hermetically sealed, reeled tapes to enable efficient production, production lot set-up and tear-down. For more information about packaging, see the u-blox Package Information Guide [3].

9.1.1 Reels

The ODIN-W2 series modules are delivered on the reel as described in Table 30:

Parameter	Specification
Reel type	B2
Delivery quantity	200

Table 30: Reel information for ODIN-W2 series modules

9.1.2 Tapes

Figure 8 shows the position and the orientation of ODIN-W2 modules as they are delivered on the tape, while Figure 9 specifies the tape dimensions.

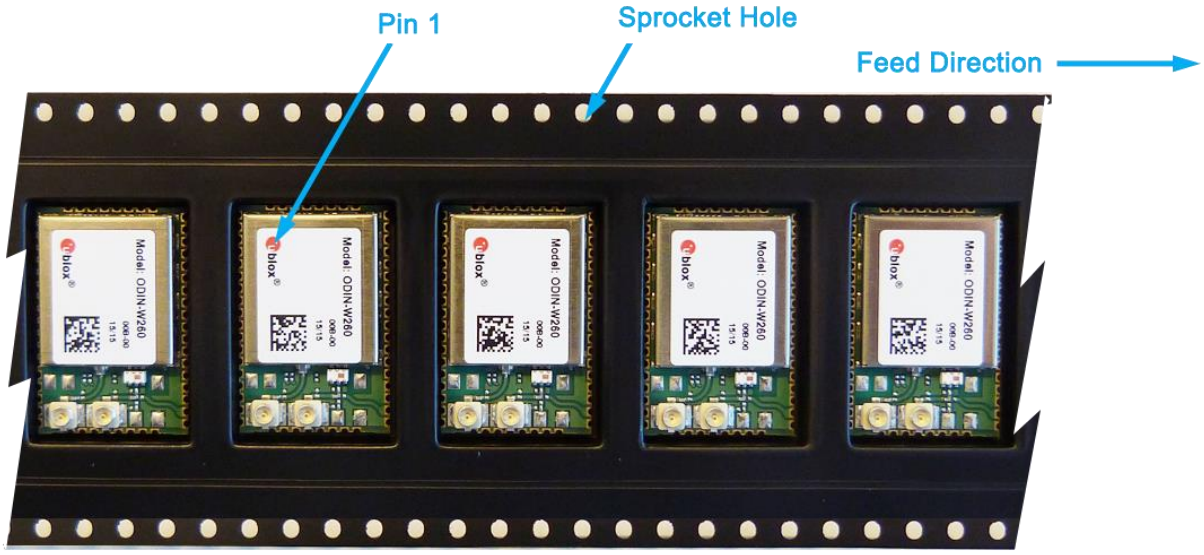

Figure 8: Orientation for ODIN-W2 modules on tape

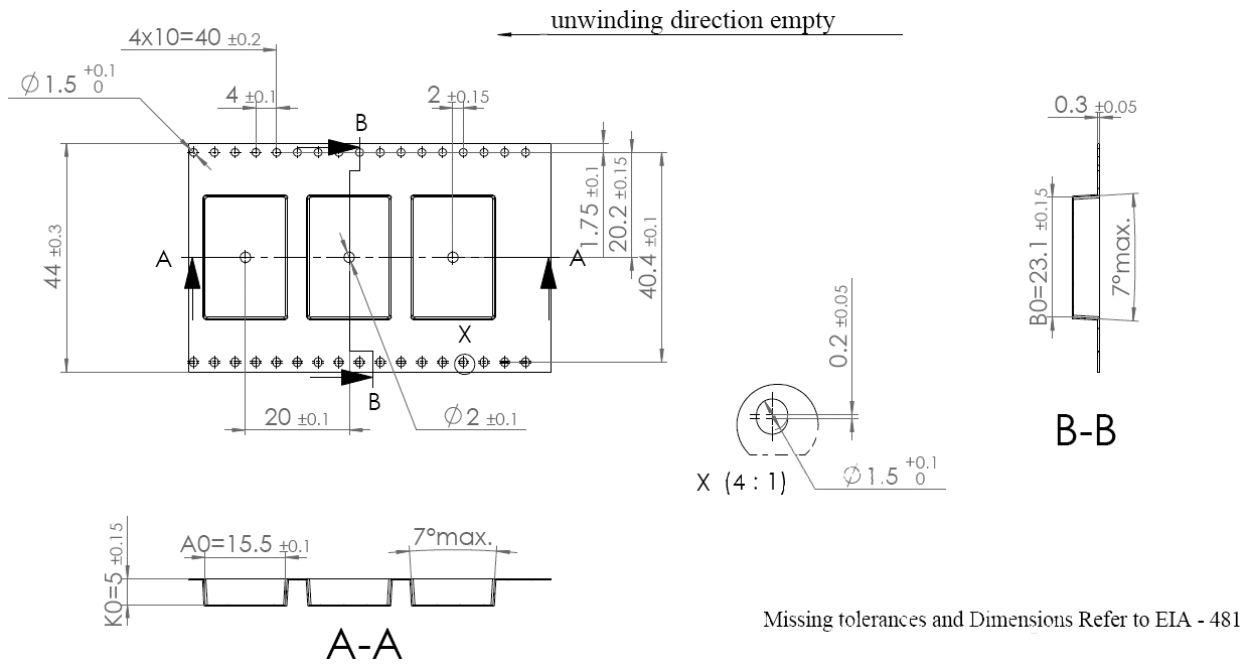

Figure 9: ODIN-W2 series tape dimensions

9.2 Moisture sensitivity levels

⚠ **The ODIN-W2 series modules are Moisture Sensitive Devices (MSD) in accordance with the IPC/JEDEC specification.**

The Moisture Sensitivity Level (MSL) relates to the required packaging and handling precautions. The ODIN-W2 series modules are rated at MSL level 4. For more information regarding moisture sensitivity levels, labeling, and storage, see the u-blox Package Information Guide [3].

☞ For MSL standards, see IPC/JEDEC J-STD-020, which can be downloaded from www.jedec.org.

9.3 Reflow soldering

Reflow profiles are to be selected according to u-blox recommendations (see ODIN-W2 series System Integration Manual [2]).

⚠ **Failure to observe these recommendations can result in severe damage to the device.**

9.4 ESD precautions

⚠ **The ODIN-W2 series modules contain highly sensitive electronic circuitry and are Electrostatic Sensitive Devices (ESD). Handling the ODIN-W2 series modules without proper ESD protection may destroy or damage them permanently.**

The ODIN-W2 series modules are electrostatic sensitive devices (ESD) and require special ESD precautions typically applied to ESD sensitive components. The Maximum ESD section reports the maximum ESD ratings of the ODIN-W2 series modules.

Proper ESD handling and packaging procedures must be applied throughout the processing, handling and operation of any application that incorporates the ODIN-W2 series module. The ESD precautions should be implemented on the application board where the module is mounted as described in the ODIN-W2 series System Integration Manual [2].

⚠ **Failure to observe these recommendations can result in severe damage to the device.**

10 Labeling and ordering information

10.1 Product labeling

The labels of the ODIN-W2 series modules include important product information as described in this section.

Figure 8 illustrates the label of all the ODIN-W2 series modules, which includes product type number and revision, production date, Data Matrix with unique serial number (MAC address), u-blox logo and regulatory certification numbers (if applicable). Because of space constraints, all certification numbers are not printed on the label (see section 7 for all certification IDs).

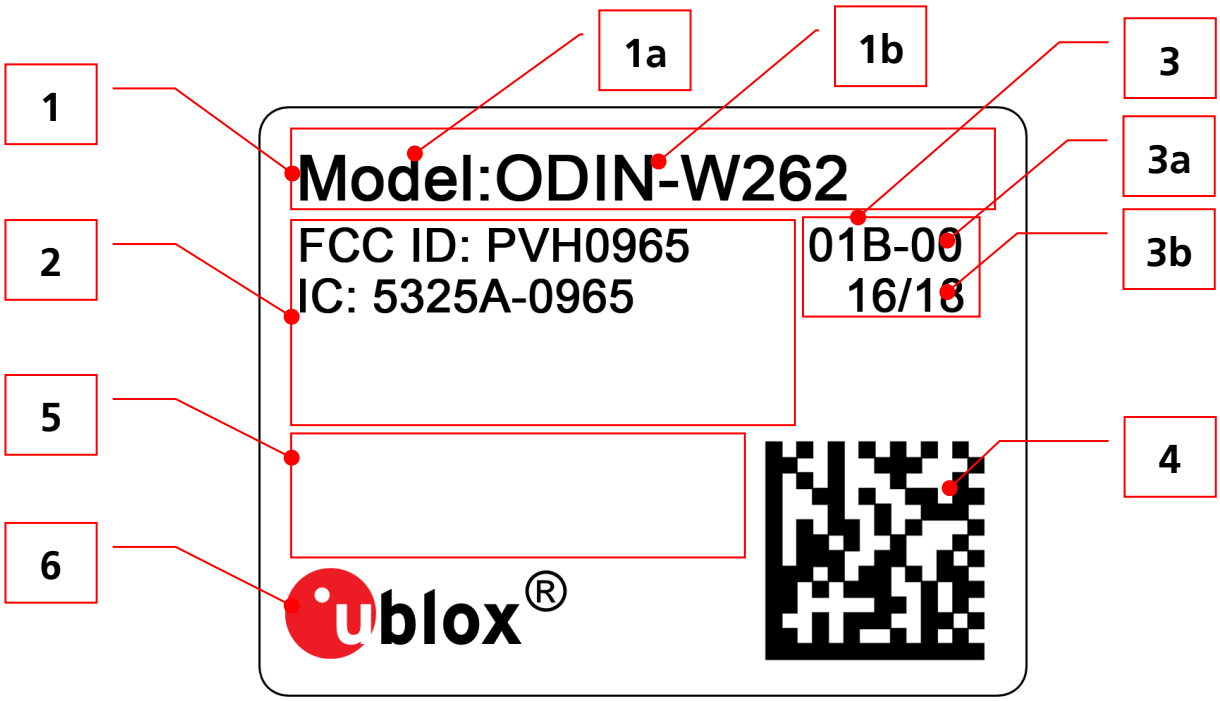

Figure 10: Location of product type number on the ODIN-W2 series module label

Reference	Description
1	Text area containing product model name
2	Text area containing regulatory certification IDs
3	Text area containing Product Revision and date of production
3a	Major and minor product version info
3b	Date of unit production encoded YY/WW (year, week)
4	Data Matrix with unique serial number of 19 alphanumeric symbols. The 3 first symbols represent the unique module type no. 587: ODIN-W260 and 588: ODIN-W262, the next 12 symbols represent the unique hexadecimal Ethernet MAC address of the module AABBCCDDEEFF, and the last 4 symbols represent the hardware and firmware version encoded HHFF. See section 0 for more information about MAC addresses.
5	Certifications logos area
6	u-blox logo. Preprinted on label. The red dot is also indicating pin 1.

Table 31: ODIN-W2 series label description

10.2 Explanation of codes

Three different product code formats are used. The **Product Name** is used in documentation such as this data sheet and identifies all u-blox products, independent of packaging and quality grade. The **Ordering Code** includes options and quality, while the **Type Number** includes the hardware and firmware versions. Table 32 below details these three different formats:

Format	Structure
Product Name	PPPP-TGRV
Ordering Code	PPPP -TGRV-TTQ
Type Number	PPPP -TGRV-TTQ-XX

Table 32: Product code formats

Table 33 explains the parts of the product code.

Code	Meaning	Example
PPPP	Form factor	ODIN
TG	Platform (Technology and Generation) T – Dominant technology, For example, W: Wi-Fi, B: Bluetooth G - Generation	W2: Wi-Fi Generation 2
R	Wireless technology; range [0...9]	6: Multi-radio dual-band 2.4+5GHz
V	Variant based on the same platform; range [00…99]	0: default mounting, with connector for external antenna
TT	Major Product Version	00: first revision
Q	Quality grade • A: Automotive • B: Professional • C: Standard	B: professional grade
XX	Minor product version (not relevant for certification)	Default value is 00

Table 33: Part identification code

10.3 Ordering information

Ordering Code	Product
ODIN-W260-00B	Wi-Fi IEEE802.11a/b/g/n (dual-band) 2.4 GHz 2x2 MIMO and Bluetooth dual-mode module with dual U.FL. coaxial antenna connectors. Firmware 1.0.0
ODIN-W262-00B	Wi-Fi IEEE802.11a/b/g/n (dual-band) and Bluetooth dual-mode module with internal dual-band antenna. Firmware 1.0.0
ODIN-W260-01B	Wi-Fi IEEE802.11a/b/g/n (dual-band) 2.4 GHz 2x2 MIMO and Bluetooth dual-mode module with dual U.FL. coaxial antenna connectors. Firmware 2.0.1
ODIN-W262-01B	Wi-Fi IEEE802.11a/b/g/n (dual-band) and Bluetooth dual-mode module with internal dual-band antenna. Firmware 2.0.1

Table 34: Product ordering codes

Appendix

A Glossary

Name	Definition
ADC	Analog to Digital Converter
BT	Bluetooth
CAN	Controller Area Network
CTS	Clear To Send
DC	Direct Current
DoC	Declaration of Conformity
DSR	Data Set Ready
DTR	Data Terminal Ready
EIRP	Equivalent Isotropically Radiated Power
FW	Firmware
GND	Ground
GPIO	General Purpose Input Output
H	High
HW	Hardware
I	Input (means that this is an input port of the module)
IEEE	Institute of Electrical and Electronics Engineers
L	Low
LPO	Low Power Oscillator
MIMO	Multi-Input Multi-Output
N/A	Not Applicable
O	Output (means that this is an output port of the module)
PCN / IN	Product Change Notification / Information Note
PD	Pull-Down
PU	Pull-Up
RMII	Reduced Media Independent Interface
RTS	Request To Send
RXD	Receive Data
SMI	Station Management Interface
SPI	Serial Peripheral Interface
TBD	To Be Defined
TXD	Transmit Data
UART	Universal Asynchronous Receiver-Transmitter serial interface

Table 35: Explanation of abbreviations and terms used

Related documents

[1] ODIN-W2 AT Commands Manual, document number UBX-14044127
[2] ODIN-W2 series System Integration Manual, document number UBX-14040040
[3] u-blox Package Information Guide, document number UBX-14001652
[4] ODIN-W2 Declaration of Conformity, document number, UBX-15024695

☞ For regular updates to u-blox documentation and to receive product change notifications please register on our homepage.

Revision history

Revision	Date	Name	Status / Comments
R01	05-Sep-2014	mwej	Initial release
R02	16-Feb-2015	fbro	Minor updates
R03	23-Apr-2015	ajoh	Updated features list, added input from early measurements and label specification
R04	08-July-2015	fbro, kgom	Applied u-blox word template
R05	22-Sept-2015	mwej, kgom	Major updates. Updated some IO voltage levels and some tolerances. Clarified mechanical outline. Updated performance measurements with ODIN-W26x SPA FW v0.11.05. Updated after type approval with approval information. Updated Table 1 similar to the ODIN-W2 series Product Summary.
R06	29-Jan-2016	mwej, pber	Added ETSI, FCC, IC, Japan approval certification information. Added Bluetooth Qualification information. Added list of approved antennas. Removed two unavailable test points from Mechanical dimensions (correction). Provided reference to ODIN-W2 Declaration of Conformity (UBX-15024695). Changed Document status to Early Production Information. Removed n rate characteristics (will be added when supported). Modified Table 1 and Table 2. Updated section 1.1 and section 5.4 (values in Table 19 to Table 26).
R07	16-Jun-2016	mwej, kgom	Updated product features (Table 1). Modified Updated to product version ODIN-W260-01B and ODIN-W262-01B due to firmware update. Updated label (section 10.1). Added MAC address information (section 1.8). Power saving mode implemented and current consumption reduced in idle mode (modified Table 14 - Table 18). Added Taiwan, China and Korea approval certification information (section 7.8 and section 8). Updated order information (Table 34).
R08	18-Jul-2016	mwej, kgom	Updated product features (Table 1). Added compliance information for Australia and New Zealand (section 7.9).
R09	08-Sept-2016	mwej	Added antenna type information (section 8.2).

Contact

For complete contact information visit us at www.u-blox.com.

u-blox Offices

North, Central and South America

u-blox America, Inc.
Phone: +1 703 483 3180
E-mail: info_us@u-blox.com

Regional Office West Coast:
Phone: +1 408 573 3640
E-mail: info_us@u-blox.com

Technical Support:
Phone: +1 703 483 3185
E-mail: support_us@u-blox.com

Headquarters
Europe, Middle East, Africa

u-blox AG
Phone: +41 44 722 74 44
E-mail: info@u-blox.com
Support: support@u-blox.com

Asia, Australia, Pacific

u-blox Singapore Pte. Ltd.
Phone: +65 6734 3811
E-mail: info_ap@u-blox.com
Support: support_ap@u-blox.com

Regional Office Australia:
Phone: +61 2 8448 2016
E-mail: info_anz@u-blox.com
Support: support_ap@u-blox.com

Regional Office China (Beijing):
Phone: +86 10 68 133 545
E-mail: info_cn@u-blox.com
Support: support_cn@u-blox.com

Regional Office China (Chongqing):
Phone: +86 23 6815 1588
E-mail: info_cn@u-blox.com
Support: support_cn@u-blox.com

Regional Office China (Shanghai):
Phone: +86 21 6090 4832
E-mail: info_cn@u-blox.com
Support: support_cn@u-blox.com

Regional Office China (Shenzhen):
Phone: +86 755 8627 1083
E-mail: info_cn@u-blox.com
Support: support_cn@u-blox.com

Regional Office India:
Phone: +91 80 4050 9200
E-mail: info_in@u-blox.com
Support: support_in@u-blox.com

Regional Office Japan (Osaka):
Phone: +81 6 6941 3660
E-mail: info_jp@u-blox.com
Support: support_jp@u-blox.com

Regional Office Japan (Tokyo):
Phone: +81 3 5775 3850
E-mail: info_jp@u-blox.com
Support: support_jp@u-blox.com

Regional Office Korea:
Phone: +82 2 542 0861
E-mail: info_kr@u-blox.com
Support: support_kr@u-blox.com

Regional Office Taiwan:
Phone: +886 2 2657 1090
E-mail: info_tw@u-blox.com
Support: support_tw@u-blox.com