TLT-1C GPS/GSM Car Tracker

Instruction Manual V3.0

Confidential Documents of V-SUN

Shenzhen V-sun Electronics Co. Ltd.

April 1, 2012

Contents

Chapter One Preface.....5

I. Overview.....5

II. Notice.....5

Chapter Two Device Description.....6

I. Brief Introduction.....6

II. Product characteristics.....6

III. Product use.....7

Chapter Three Initial Use and Model Description.....14

I. Working mode of device.....14

II. Switchover between the two modes.....14

Chapter Four Application and Operation in SMS Mode.....16

1. Instruction to change user password.....16

2. Instruction to request single positioning.....16

3. Instruction to return Chinese address for single positioning.....18

4. Instruction to return Google map screenshot link for single positioning.....19

5. Instruction to return map link for single positioning.....20

6. Instruction to report on time everyday.....20

7. Set the number of returned base stations.....20

8. Read base station information.....21

9. Instruction for calling switch.....21

10. Monitoring function (mute switch of earphone).....21

Confidential Documents of V-SUN

11. Instruction for incoming call restriction switch..... 22

12. Phone positioning function..... 22

13. Emergency alarm (SOS)..... 22

14. Power off Alarm..... 23

15. Fuel cutoff function..... 23

16. Geo-fence function..... 24

17. Overspeed alarm..... 27

18. Mileage statistics function..... 28

19. Tow truck alert function..... 28

20. Low battery alarm..... 29

21. Instruction to switch on/off ACC status prompt..... 29

22. ACC detection and movement warning..... 29

23. Instruction to set GPS status..... 30

24. Instruction to change time zone setting..... 31

Chapter Five Application and Operation in GPRS Mode..... 32

1. Change GPRS user name..... 32

2. Change GPRS service password..... 32

3. Set GPRS access point (Access Point Name)..... 32

4. Set IP address and port..... 32

5. Set timing data upload..... 33

6. Instruction to upload current position immediately..... 34

7. Phone upload..... 34

Confidential Documents of V-SUN

8. Emergency upload..... 35

9. Low voltage upload..... 35

10. Historical data upload function.....35

11. Switch to upload invalid data.....36

12. Instruction to change time zone setting in GPRS mode..... 36

Confidential Documents of V-SUN

Chapter One Preface

I. Overview

TLT-1C is a perfect combination of GSM and GPS technologies. The advanced technologies of the product in GSM and GPS fields are verified by its accurate dimension and simple appearance. It represents a typical design integrating the communication product and GPS positioning.

We provide professional safety-guarding and car-positioning products and solutions.

Before you use the product, please take some time and go through this instruction manual to understand operational details and receive better services.

II. Notice

1. Please read the instruction manual carefully and operate the product properly to avoid any trouble.

2. It is recommended to install the product in a professional automobile workshop to ensure operating safety and concealment of installation.

3. The instruction manual is only for your reference. In case of any difference between the manual and the actual product, the latter shall prevail.

4. Product parameters and functions are subject to upgrade without notice. In case of any question, please contact V-SUN or your distributor.

Confidential Documents of V-SUN

Chapter Two Device Description

I. Brief Introduction

TLT-1C GPS/GSM is a car remote positioning and tracking device produced based on GPS technology and GSM/GPRS technology. It receives the latitude and longitude of the user's location through cell phone messages and then locates the tracker on Google Map or other digital map software; or positioning data is uploaded by the tracker to the specified server through GPRS, and the user may search the real-time position and historical track of the tracker on the internet.

TLT-1C GPS/GSM car tracker applies to motorcycles, electric golf carts and private cars.

II. Product characteristics

1. Built-in high-performance GPS chipset enables the product to provide accurate positioning in the event of weak signal and to work normally in urban areas, valleys or other sight-limited districts.

2. Built-in GSM/GPRS model supports GSM900/1800MHz (850/1900 MHz), thus it can work throughout the world.

3. It supports SMS communications or GPRS TCP connection, and receives position information through cell phone message or used to look into movement track on the internet.

4. It provides such functions as SOS, fuel cutoff/power failure, warning by cutting off external power wire, geo-fence, overspeed warning, historical data upload, parking throttle upload and moving car tracking timing upload.

5. It provides voice call function (connected with earphone)

6. It is equipped with highly reliable electric circuit and complies with electronic industry standards.

III. Product use

1. Specifications

Hardware	Parameter
GSM module	MTK GSM/GPRS chipset GSM 900/1800 double frequency , or GSM 900/1800/850/1900 four frequency (optional) Supports TCP protocol

Confidential Documents of V-SUN

GPS chip	GPS chip set with high sensitivity
GPS sensitivity	-160dBm
GPS frequency	L1,1575.42MHz
Code	C/A Code
Channel	50-channel, omnibearing tracking
Position accuracy	<2.5m,CEP
Speed accuracy	0.1m/s
Time accuracy	1us and synchronous with GPS time
Coordinates	WGS-84
Reacquisition	0.1s on average
Hot start	1s on average
Warm start	30s on average
Cold start	32s on average
Altitude Limit	Maximum 18,000 meter (60,000 feet)
Velocity limit	Maximum 515m/s (1000 knot)
Acceleration Speed limit	Less than 4g
Working temperature	-25℃to 70℃
Humidity	5%~95% non-concretion
Dimension	94mm×53mm×26mm
Voltage	12-24V

Confidential Documents of V-SUN

2. Product appearance

1. Product general view

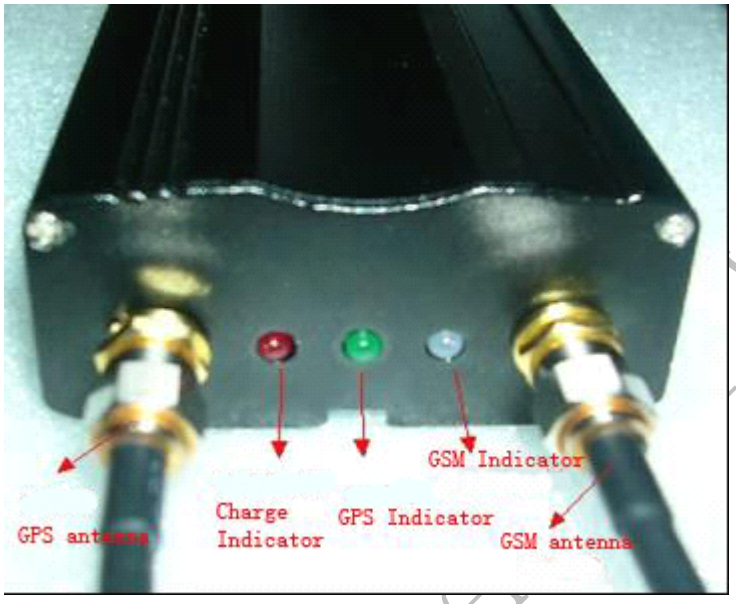

Figure 1 Product Front View

Confidential Document V-SUN

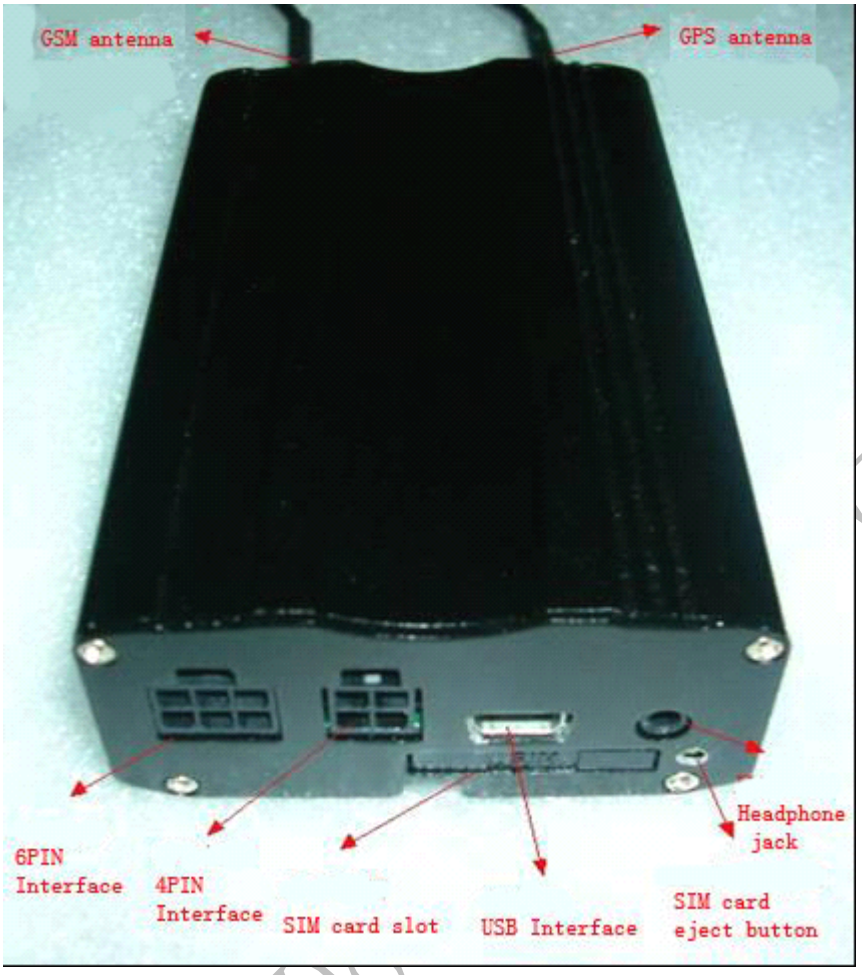

Figure 2 Product Back View

3. LED status description

3.1 Green LED ---- GPS status indicator

Status	Description
Off	GPS unavailable
Quick flash	GPS available

3.2 Blue LED ---- GSM status indicator

Confidential Do -SUN

Status	Description
Quick flash	No SIM card or GSM network
Flash once every 8s	GSM works normally

3.3 Red LED ---- charge indicator

Status	Description
Normal light	Under charging
Weak light	Charging completed

4. Product installation

4.1 SIM card installation

a. Select SIM card

● You can use SIM card provided by local mobile operators.

● It supports SMS/GPRS function and has enough balance.

b. Use tweezers or other tools to press the yellow "SIM card pop-up button" in the round hole on SIM card side, then SIM card slot will pop up automatically. Load SIM card into the slot and put the slot back into the socket until it is totally embedded and locked.

Note: 1. Attention should be given to SIM card installation sequence: firstly insert SIM card and then connect external power supply. Never reverse the sequence to avoid damage to SIM card.

2. As SIM card slot is a power supply switch, if it is not in use for a long time, please take it out to avoid running down of battery.

Confidential Documents of V-SUN

4.2 Installation of external power wire

General view of external power wire.

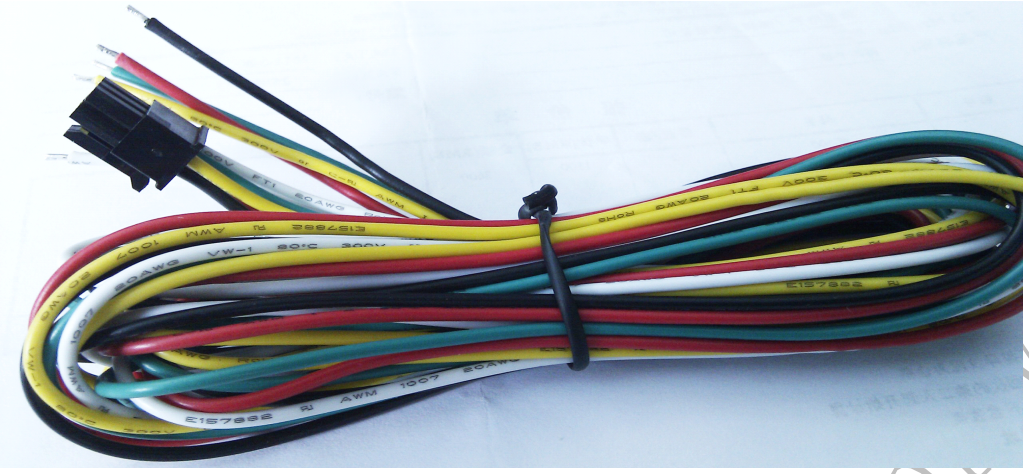

Figure 3 Pins from Left to Right

PIN1 (red): 12V power wire of car to connect positive electrode of car battery;

PIN2 (black): ground wire to connect negative electrode of car battery;

PIN3 (green): ACC wire to supply power for car ACC;

PIN4 (white): control wire of fuel cutoff/power failure to connect relay;

PIN 5 (yellow): SOS wire to connect ground wire and trigger SOS;

4.3 Connection method of relay

The five wires externally connecting TLT-1C are as shown in the following diagram. The red one is 12 power wire of the car to connect positive electrode of battery. The black one is ground wire to connect negative electrode of battery. The yellow one is SOS control wire to connect SOS switch and negative electrode of car battery. The green one supplies power for car ACC and connects car CD and car radio in parallel. When the car key is put on ACC gear and the green wire detects 12V voltage, the terminal will automatically start charging function and switch GPRS timing upload mode. The white one is control wire of fuel cutoff/power failure and connects pin 86 of relay which is a coil end. Pin 85 of the relay which is another coil end connects fuel channel to supply 12V power (please note working volt of the relay is consistent with working volt of the product). Pin 30 and Pin 87a are always closed ends and connect fuel channel power circuit in series. Please install wire in a correct way. V-sun will not be responsible for device damage caused by wrong installation.

Confidential Documents of V-SUN

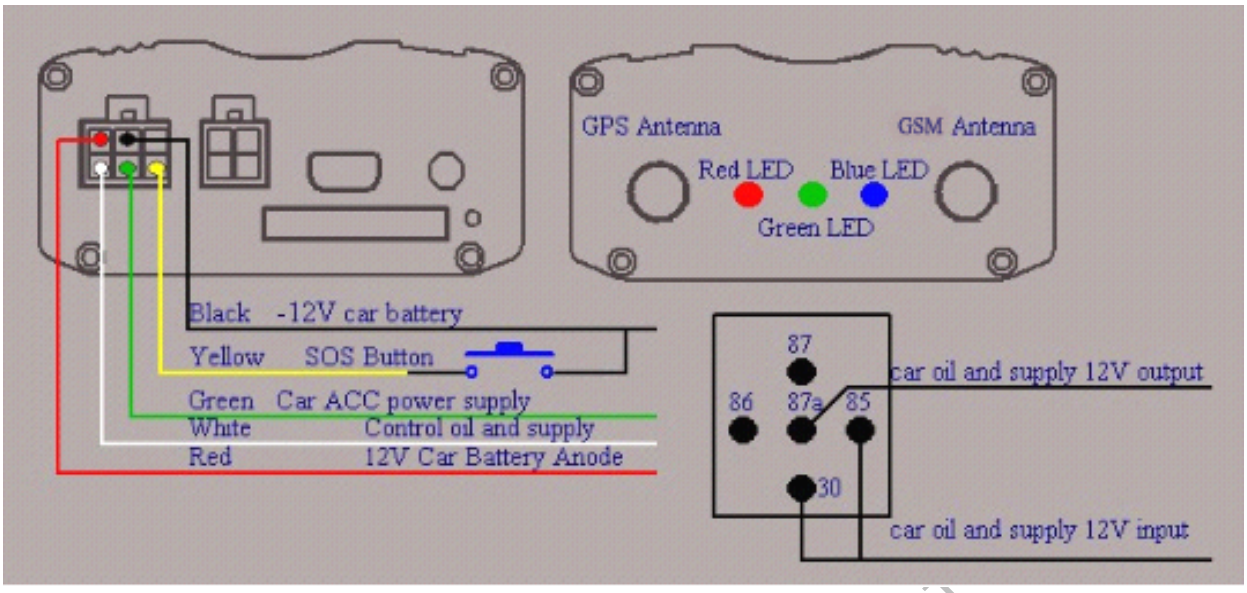

Figure 4 Connection method of relay

5. Product accessories

1. TLT-1C GPS/GSM Car Tracker

2. Power wire

3. GPS/GSM antenna

4. Earphone

5. Battery

6. Instruction manual (CD)

Confidential Documents of

Chapter Three Initial Use and Model Description

After reading brief introduction to the product, you must know how to install the product. Then it comes to product's use.

Firstly, as the user of such product, you need to pre-store telephone number before performing instruction operation on the device. Telephone number is pre-stored as follows:

Instruction format: *new number 4-20 digits*user password 4 digits*serial number (1-3)**

For example: *13900000000*0000*1**

Description: If TLT-1C receives the instruction and returns confirmation message "SET USER NUMBER (1-3) OK", then pre-stored number will be set successfully.

Note:

1. Initial password for the device is 0000.

2. The device can pre-store 3 telephone numbers at most.

3. The instruction also applies to new number which covers existing number. For example, A is the first pre-stored number. If B also sends instruction to set the first pre-stored number, number of B will substitute number of A and become the first pre-stored number.

4. Any number not prestored can not be used to dial or connect device end telephone but can send message instruction.

Confidential Documents of V-SUN

I. Working mode of device

The product has the following two working modes: SMS mode (message point to point) and GPRS online mode.

1. If the user only wants to inquire for car position (longitude and latitude) with cell phone, corresponding address on Google map or control fuel cutoff/power failure with cell phone, please select SMS mode.

2. If the user wants to monitor car real-time status and inquire for its historical track, please select GPRS real-time online mode.

II. Switchover between the two modes

The following instruction may be used to switch over between the two modes.

Message (SMS) point-to-point mode:

Instruction format: 700+user password (4 digits)

For example: 7000000

Description: When TLT-1C receives the instruction, it will automatically switch to SMS mode. If success, it

will return confirmation message "**SET MODE OK, CURRENT MODE: SMS P2P**".

GPRS online working mode:

Instruction format: 710+user password (4 digits)

For example: 7100000

Description: When TLT-1C receives the instruction, it will automatically switch to GPRS mode. After success, it will return confirmation message "SET MODE OK, CURRENT MODE: GPRS".

Confidential Documents of V-SUN

Chapter Four Application and Operation in SMS Mode

Most instructions are operable under both SMS mode and GPRS mode unless otherwise specified.

1. Instruction to change user password

Instruction format: 777+new password (4 digits) + old password (4 digits)

For example: 77712340000

Description: The terminal receives the instruction and return confirmation message after success. The message is "SET USER PASSWORD OK".

2. Instruction to request single positioning

Instruction format: 666+user password (4 digits)

For example: 6660000

Description: When TLT-1C receives the instruction, it will return current positioning message after success. Data message format is as follows:

Lat: latitude direction (+/-) latitude value (accurate to 5 digits after decimal point)

Long: longitude direction (+/-) longitude value (accurate to 5 digits after decimal point)

Speed: Speed KM/H (accurate to 2 digits after decimal point)

Direction: course direction (accurate to 2 digits after decimal point)

Date: YYYY-MM-DD

Time: HH:MM:SS (Greenwich Mean Time)

BS: Base station information

FIX: positioning status (A/V) (A stands for Available, V stands for Unavailable)

ID: IMEI (device IMEI number)

STATE: message status

Example of valid data message:

Lat: +22.50500

Long: +114.01000

Speed: 0.00KM/H

Direction: 315.00

Date: 2008-04-25

Confidential Documents of V-SUN

Time: 16:39:45

BS: 25ee0dff

Fix: A

ID: 353686009002030

STATE: SMS

Note: 1. In case of cold start and GPS is not positioned, invalid message will be returned: GPS UNAVAILABLE, PLEASE TRY AGAIN LATER.

2. Inquire for position corresponding to latitude and longitude on Google map.

Search for obtained latitude and longitude on http://maps.google.com to view detailed position corresponding to latitude and longitude.

For example, when sending instruction "666+password" to terminal, the following message will be obtained.

Lat: +22.50500

Long: +114.01000

Speed: 0.00KM/H

Direction: 315.00

Date: 2008-04-25

Time: 16:39:45

BS: 25ee0dff

Fix: A

ID: 353686009002030

STATE:SMS

Then, search for +22.50500 +114.01000 on http://maps.google.com to view detailed position (as shown in the following graph).

Confidential Documents of V-SUN

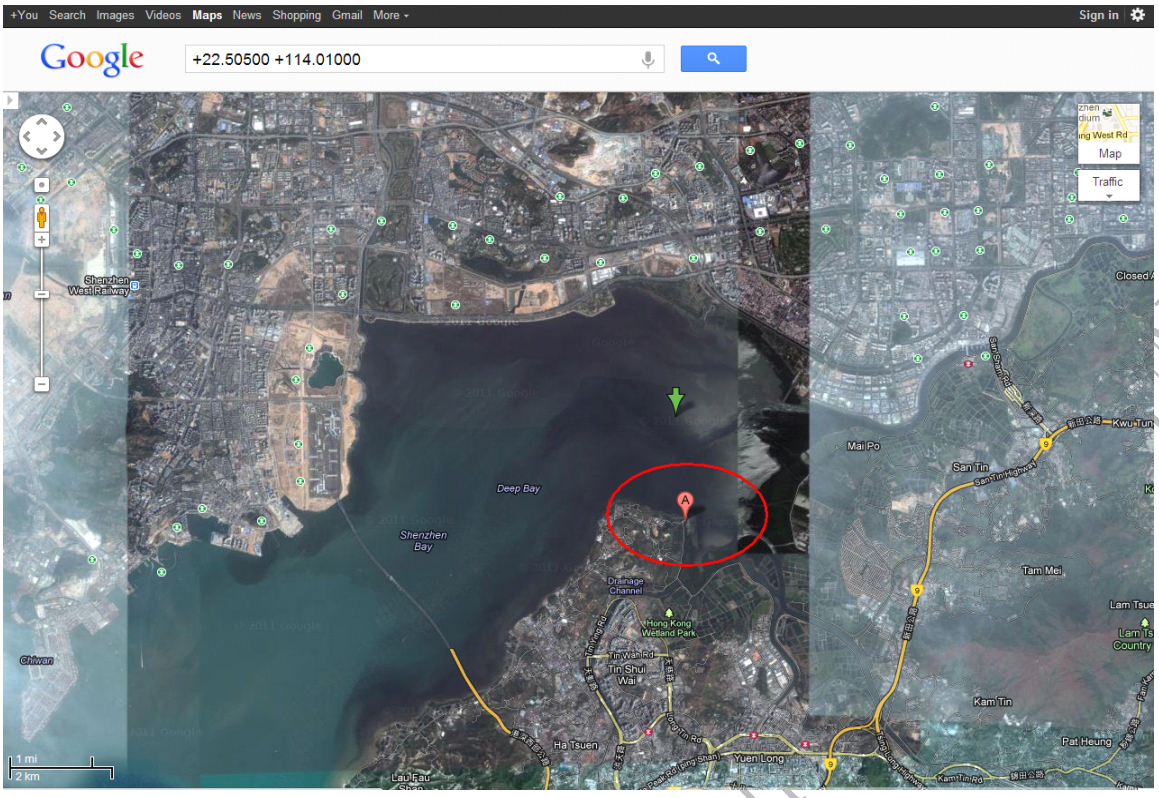

Figure 4

You can also input position data into local map software on PDA or navigation device to view the position (as shown in the following graph)

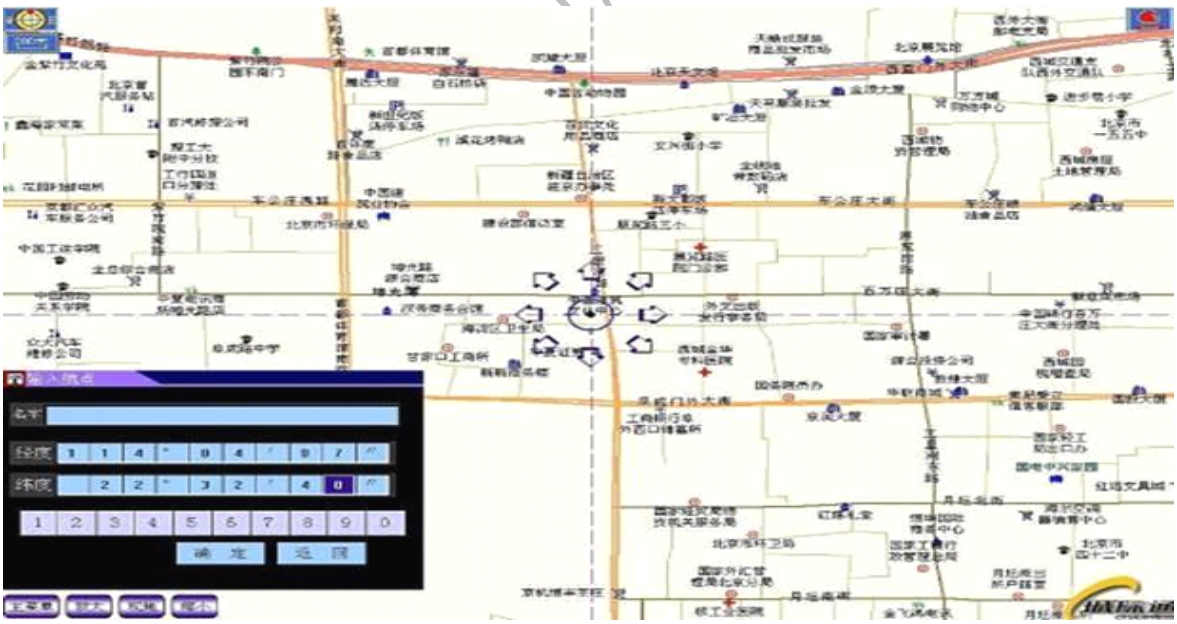

Figure 5

3. Instruction to return Chinese address for single positioning

Instruction format 1: 667+user password

For example: 6670000

Instruction format 2: 667+user password+MAP

For example: 6670000MAP

Instruction format 3: 667+user password+MAP,WWW,HHH,ZZ

For example: 6670000MAP,640,480，15

Description:

1. When the device receives instruction 1, it will immediately read GPS information and return Chinese address information to the sending number.

For example: Within 31 meters southwest of Shangjuhaoyuan east gate on Jingtian East Road in Shenzhen, Guangdong.

2. Send instruction 2 and a website will be returned. Open it to view current position and screenshot:

For example:
http://www.gps068.com/cngps/mapaddr.asp?lng=114.09998&lat=22.55709&z=15&w=240&h=320

3. Send instruction 3 to user-defining size and zoom of screen shot. WWW is picture width, HHH is picture height and ZZ is zoom level. (Note: WWW value and HHH value are less than 1000. It is recommended that ZZ value is 1-20. Adjusting ZZ is to adjust zoom level of screenshot). For example,
http://www.gps068.com/cngps/mapaddr.asp?lng=114.09998&lat=22.55709&z=15&w=240&h=320

4. Default size of screenshot is 240*320.

5. The instruction is only valid in China mainland.

4. Instruction to return Google map screenshot link for single positioning

4.1 Instruction format 1: 668+user password

For example: 6680000

4.2 Instruction format 2: 668+user password, WWW, HHH, ZZ

For example: 6680000, 999, 999, 15

Description: 1. After the device receives instruction 4.1, it will read GPS information immediately and return Google map screenshot address of local position. Open the website to view position information.

Example of screenshot website is as follows:

http://maps.google.com/maps/api/staticmap?center=22.557118,114.100010&zoom=15&size=240x320&markers=22.557118,114.100010&sensor=true

2. Send instruction 4.2 to user-defining picture size. WWW stands for picture width, HHH stands for picture height and ZZ stands for zoom level (Note: WWW value and HHH value shall not exceed 1000 and ZZ value is recommended to be 1-20).

3. Default size of screenshot is 240*320.

Confidential Documents of V-SUN

5. Instruction to return map link for single positioning

Instruction format: 669+user password

For example: 6690000

Description: When the device receives the instruction, it will read GPS information immediately and return Google map link of local position to the number. User can use PDA or smart phone to view local position on Google map.

Website example:

http://maps.google.com/maps?f=q&hl=en&q=22.554765,114.104716&ie=UTF8&z=16&iwloc=addr&om=1

Note:

If the server cannot be connected after the above stated 3 instructions (667/668/669) are sent or due to other cause, the following messages will be returned.

1) If the server cannot be connected, it will return: SERVER BUSY, PLEASE TRY AGAIN LATER.

2) If GPS is not available, it will return GPS UNAVAILABLE, PLEASE TRY AGAIN LATER.

3) When you use Google map in China mainland, there may be deviation between the positioned position and the actual position in special cases.

6. Instruction to report on time everyday

Instruction format: 665+user password+HHMM

For example: 66500001022

Close timing report: 665+user password+OFF

For example: 6650000OFF

Description: After receiving the instruction, the device will immediately return confirmation information: SET DAILY REPORT OK.

Note:

1. Using this instruction, the user may receive a piece of positioning information at a stated time, with its format as shown in “Single positioning request”.

2. HH stands for hour with defined range of [00, 23]. MM stands for minute with defined range of [00, 59].

7. Set the number of returned base stations

Instruction format: 55X+user password (4 digits)

For example: 5510000

Description: After success to receive the instruction, the device will immediately return confirmation

Confidential Documents of V-SUN

information: SET BASESTATION OK.

Note: 1. X is base station number with value range of [0, 6].

2. If X is 0, position information contains no base station information.

3. Default number of base station is 1.

8. Read base station information

Instruction format: 111+user password (4 digits)

For example: 1111234

Description: After success to receive the instruction, the device will return the following message to the sender.

Data format: BS: base station information 1, base station information 2, base station information …n

9. Instruction for calling switch

Instruction format of calling off: 150+user password

For example: 1500000

Instruction format of calling on: 150+user password

For example: 1510000

Description: 1. After receiving instruction of calling off, TLT-1C will turn off calling function (including SOS, power cutoff warning calling, fence warning calling, overspeed warning) and return confirmation message "**SET VOICE CALL: OFF**".

2. After receiving instruction of calling on, TLT-1C will turn on calling function (including SOS, power cutoff warning calling, fence warning calling, overspeed warning) and return confirmation message "**SET VOICE CALL: ON**".

Note:

1. In case of calling off, when SOS, power cutoff warning, fence warning or overspeed warning occurs, message will be returned instead of call.

2. Default setting is calling function on.

10. Monitoring function (mute switch of earphone**)**

Instruction format: 00X+user password

For example: 001000 or 0000000

Confidential Documents of V-SUN

Description: When receiving the instruction, the device will set status of earphone switch in accordance with X value.

X=1, earphone is switched off and the device is in monitoring mode. After setup is successful, the device will send confirmation information to the sender: **SET PROFILE OK, CURRENT PROFILE: SILENT.** After earphone is turned off, if prestored phone calls in, the terminal will not give prompt sound. About 10 seconds later, the phone will be answered automatically. The user can hear sound from the device side but the device side cannot hear the user.

When X=0, the earphone is turned on. After setup is successful, the device will send confirmation information to the sender: SET PROFILE OK, CURRENT PROFILE: NORMAL. After earphone is turned on, if prestored phone calls in, there will be prompt sound. About 10 seconds later, the phone will be answered automatically. Both parties can converse with each other. After conversation the device will return position information with the same format as "request for single positioning". Information status is STATUS: ANSWER. If non-prestored phone number calls in, it will be hung up without other response.

Note: Default setting is earphone on (non-monitoring status).

11. Instruction for incoming call restriction switch

Instruction for incoming call restriction on: 170+user password

For example: 1700000

Instruction for incoming call restriction off: 171+user password

For example: 1710000

Description: After success to receive instruction for incoming call restriction on (170), TLT-1C will return confirmation message: **SET UNLIMITED MODE OFF OK.** At this time, the device can only receive incoming call from 3 prestored numbers. Incoming call from non-prestored number will be hung up without other response.

After success to receive instruction for incoming call restriction off (171), TLT-1C will return confirmation message: **SET UNLIMITED MODE ON OK.** The device can answer incoming call from any cell phone.

Note: Default setting is incoming call restriction on.

12. Phone positioning function

Description: If incoming call is from one of the three prestored phone numbers and it is hung up after ringing for 2-5 times, the device will send position information with the same format as “request for single positioning” to the incoming call number. The information status is **STATE: CALL**. If non-prestored phone number calls in, it will be hung up without any other response.

13. Emergency alarm (SOS)

Description: Press SOS key for over 3 seconds to send positioning information with information format

Confidential Documents of V-SUN

returned from "request for single positioning" to the three prestored phone numbers. Information status is STATE: SOS. At the same time, the first prestored phone number will be called. If it fails (the phone is turned off or cannot be connected), the second and the third phone number will be called in sequence.

Note: If calling status is off, message will be sent to prestored user instead of calling him.

14. Power off Alarm

Instruction to turn on power cutoff warning: 011+user password

For example: 0110000

Instruction to turn off power cutoff warning: 010+user password

For example: 0100000

Description: After receiving instruction 011, the device will return confirmation information: **DEFENCE ON** and enter defence status. Once external power supply is cut off unexpectedly, the device will send positioning information of "request for single positioning" to the three prestored numbers. Information status is STATE: DEF. At the same time, the first prestored phone number will be called. If it fails (the phone is turned off or cannot be connected), the second and the third phone number will be called in sequence.

After receiving instruction 010, the device will return confirmation information: **DEFENCE OFF**. Then power cutoff warning function is cancelled and the device will stop monitoring unexpected cutoff of external power supply.

Note:

1. Default power cutoff warning is off.

2. If calling status is off, message will be sent to prestored user instead of calling him.

15. Fuel cutoff function

15.1. Fuel cutoff and power failure

15.1.1 Fuel cutoff/power failure message instruction: 900+user password

15.1.2 Fuel cutoff/power failure message confirmation instruction: 901+user password

Description: As fuel cutoff/power failure operation is dangerous to some extent, one more confirmation operation is necessary.

After receiving instruction 900, TLT-1C will return confirmation message "Confirm Power OFF?" and wait for instruction 901. If it receives confirmation instruction (901) sent by the user within 10 minutes, TLT-1C fuel channel power supply will be cut off. After completion, it will return confirmation message "POWER OFF OK".

15.1.3 Fuel cutoff/power failure single instruction format: 940+user password

Description: 940=900+901. After receiving instruction from prestored number, TLT-1C will immediately perform fuel cutoff/power failure.

Confidential Documents of V-SUN

15.2. Recovery of fuel cutoff/power failure (resume the oil and power)

15.2.1 Fuel cutoff/power failure recovery instruction: 902+user password

15.2.2 Fuel cutoff/power failure recovery confirmation instruction: 903+user password

Description: After success to receive the instruction 902, TLT-1C will send confirmation information "Confirm Power ON?" and wait for instruction 903. If it receives confirmation instruction (903) sent by the user within 10 minutes, TLT-1C fuel channel power supply will be recovered. After completion, it will send confirmation information to the sender "POWER ON OK".

15.2.3 Fuel cutoff/power failure recovery single instruction format: 941+user password

Description: 941=902+903. After receiving instruction from prestored number, TLT-1C will immediately perform fuel cutoff/power failure recovery.

Note: 1. If fuel cutoff/power failure instruction has been set, the status will remain when the product is rebooted.

2. The function is accompanied by some risk. For example, if the instruction is sent when the car travels fast on the highway, traffic accident might be caused. Therefore, please do not use the function unless necessary.

16. Geo-fence function

Geo-fence of the device has the following two modes: round Geo-fence and square geo-fence.

Round Geo-fence takes the set coordinates as center of circle and uses the set semi-diameter to determine fence scope. Square Geo-fence uses 4 known latitude and longitude points to determine a square fence.

When the function is activated, once TLT-1C steps beyond fence scope, it will send positioning information with the information format returned by above stated "request for single positioning" to the three prestored numbers. Information status is STATE: OS. At the same time, the first prestored phone number will be called. If it fails (the phone is turned off or cannot be connected), the second and the third phone number will be called in sequence.

When TLT-1C enters fence scope again, it will send positioning information with information format returned from "request for single positioning" to the three prestored number immediately. Information status is STATE: RS. At the same time, the first prestored phone number will be called. If it fails (the phone is turned off or cannot be connected), the second and the third phone number will be called in sequence.

16.1 Setting of round Geo-fence scope

The user may at his discretion select the following formats to operate according to the input different formats of coordinates.

Instruction format 1: 003 + user pass word E/Wdddmm.mmmmN/Sddmm.mmRzzz.z

Confidential Documents of V-SUN

For example: 0030000E11406.0024N2233.4230R0.1

When receiving the instruction, TLT-1C will return confirmation message to the sender: SET GEO-FENCE OK and turn on Geo-fence function.

Description: E: east longitude; W: west longitude; N: north latitude; S: south latitude. south latitude. Here E and N are used to explain as an example. Please select corresponding coordinate formats in accordance with actual geographic position. Each section's meaning of the example is as follows:

Edddmm.mmmm is longitude information with degree and minute as unit, among which ddd stands for degree and mm.mmmm stands for minute (4 digits after decimal point is maintained and zero cannot be omitted).

Nddmm.mmmm is latitude information with degree and minute as unit, among which dd stands for degree and mm.mmmm stands for minute (4 digits after decimal point is maintained and zero cannot be omitted).

zzz.z is radius with definition domain of [0.1, 999.9] and unit of KM.

Instruction format 2: 004 + user password E/Wddd.dddddN/Sdd.ddddRzzz.z

For example: 0040000E114.10004N22.55705R999.9

When receiving the instruction, TLT-1C will return confirmation message to the sender: SET GEO-FENCE OK and turn on Geo-fence function.

Description: E: east longitude; W: west longitude; N: north latitude; S: south latitude. Here E and N are used to explain as an example. Please select corresponding coordinate formats in accordance with actual geographic position. Each section's meaning of the example is as follows:

Eddd.ddddd is longitude information with degree as unit, among which ddd.ddddd stands for degree (5 digits after decimal point is maintained and zero cannot be omitted).

Ndd.ddddd is latitude information with degree as unit, among which dd.ddddd stands for degree (5 digits after decimal point is maintained and zero cannot be omitted).

zzz.z is radius with definition domain of [0.1, 999.9] and unit of KM.

Instruction format 3: 005 + user password Rzzz.z

For example: 0050000R0.1

Description: After receiving the instruction, TLT-1C will extract current longitude and latitude information as fence coordinate from the latest GPS data and takes R value as radius. It also turns on Geo-fence and send confirmation message to the sender after success: GE0-FENCE ON.

Note:

zzz.z is radius with definition domain of [0.1, 999.9].

16.1.1 Instruction to turn on round geo-fence

Turn on geo-fence: 211 + user password

Confidential Documents of V-SUN

After receiving the instruction, TLT-1C will return confirmation message: **GEO-FENCE ON.**

16.1.2 Turn off round Geo-fence instruction:

Turn off geo-fence: 210 + user password

After receiving the instruction, TLT-1C will return confirmation message: GEO-FENCE OFF.

Note: 1. Fence radius shall not exceed its defined domain. When decimal digit is 0, please add 0. For example, when R is 1, please enter 1.0.

2. If calling status is off, message will be sent to prestored user instead of calling him.

3. Degree and minutes is of sexagesimal system, i.e., 1d=60m.

16.2 Setting of square Geo-fence scope

Instruction format: 006 + user password + GX, IO/I/O, E/W longitude upper limit + N/S latitude upper limit, E/W longitude lower limit + N/S latitude lower limit.

For example: 0060000G1,IO,E114.10004N22.55705,E115.10006N23.55706

After receiving the instruction, TLT-1C will return confirmation message: SET SQUARE GEO-FENCE GX(IO/I/O) OK.

Description: GX is Geo-fence X, whose value range is **[**1, 16**]**. IO means warning for both outgoing and incoming fence; I means warning for incoming fence; O means outgoing fence. Longitude and latitude value take degree as unit. 5 digits after decimal point shall be reserved and 0 shall not be omitted.

IO means warning for both outgoing and incoming fence; I means warning for incoming fence; O means outgoing fence.

Note:

(1) After setting is completed, fence is turned on automatically. Now, default fence type is IO, i.e., warning for both outgoing and incoming fence.

(2) If calling status is off, message will be sent to prestored user in SMS mode instead of calling him.

(3) Value set by the instruction is not subject to power off or switch on/off until change instruction or restoration operation is received again.

(4) After restoration, longitude value is indicated by 0. Fence is in cutoff status.

16.2.1 Turn on square geo-fence

Instruction format to turn on all square geo-fence: 311 + user password

For example: 3110000

Instruction format to turn on single square geo-fence: 311 + user password +GX

Confidential Documents of V-SUN

For example: 3110000G5

Description: The instruction is used to turn on all square Geo-fence and turn on single square geo-fence. GX stands for Geo-fence X, whose value range is【1，16】. After receiving the instruction, TLT-1C returns confirmation message: **SET ALL SQUARE GEO FENCE: ON.** When turning on single square geo-fence, it returns confirmation message: **SET SQUARE GEO FENCE GX: ON.**

16.2.2 Instruction to turn off square geo-fence

Instruction format to turn off all rectangular geo-fence: 310 + user password

For example: 3100000

Instruction format to turn off single rectangular geo-fence: 310 + user password +GX

For example: 3100000G5

Description: The instruction is used to turn on all rectangular Geo-fence and turn on single rectangular geo-fence. GX stands for Geo-fence X, whose value range is [1, 16]. After receiving the instruction, TLT-1C returns confirmation message: **SET ALL SQUARE GEO FENCE: OFF.** When turning on single square geo-fence, it returns confirmation message: **SET SQUARE GEO FENCE GX: OFF.**

Note: If multiple set square fences give warning at the same time. G1 will call and G2, G3, G4… will send position message instead of calling. As for the ex-factory configuration or in case of restoration, the status is RS by default.

Notice:

Above stated geo-fences are optional. When the device receives Geo-fence setting instruction, Geo-fence function will be activated automatically. When Geo-fence function is activated again after turned off, previous setting remains valid.

17. Overspeed alarm

Instruction format: #122#user password#X##

For example: #122#0000#250##

After receiving the instruction, TLT-1C will return confirmation message: SET RATE LIMIT:250.

Description:

1. X is speed benchmark value, which is an integral number. Its unit is KM/H with defined domain of [0, 999]. When X=0, overspeed warning function is turned off.

2. After the function is activated, if travel speed exceeds set speed, the device will send position information with information format returned from “request for single positioning" to the three prestored numbers immediately. Information status is **STATE: OVERSPEED.** It will also call the first prestored number immediately. If it fails (the phone is turned off or cannot be connected), the second and the third phone number will be called in sequence. Then, if travel speed is less than set speed, the device will send position information with information format

Confidential Documents of V-SUN

returned from “request for single positioning" to the three prestored numbers immediately. Information status is STATE: SAFE SPEED. It will also call the first prestored number immediately. If it fails (the phone is turned off or cannot be connected), the second and the third phone number will be called in sequence.

18. Mileage statistics function

18.1 Instruction to turn off mileage statistics

Instruction format: 140+user password

For example: 1400000

Description: After receiving the instruction, TLT-1C will return confirmation message: SET MILEAGE STATISTICS OFF OK. Mileage statistics function will remain in turnoff status.

18.2 Instruction to turn on mileage statistics

The instruction can be used to set the interval of timing report on total mileage.

Instruction format: 141+PW

Description: After receiving the instruction, TLT-1C will return confirmation message: SET MILEAGE STATISTICS ON OK. Mileage statistics function will be turn on.

18.3 Instruction to set initial mileage value (zero clearing)

Instruction format: 142+PW

Description: After receiving the instruction, TLT-1C will return confirmation message: MILEAGE STATISTICS RESET OK.

18.4 Instruction to read current mileage

Instruction format: 143 + user password.

For example: 1430000

Description: After receiving the instruction and confirming that user password is correct, the device will read current total mileage value and return the following message to the number which sends the instruction: MILEAGE STATISTICS:ON，CURRENT TOTAL MILEAGE:XX (XX means current mileage value with unit of M).

Note:

1. If zero clearing is not performed, the mileage read is accumulated value;

2. Mileage statistics is off by default.

19. Tow truck alert function

Confidential Documents of V-SUN

19.1 Turn on tow truck alert: 181 + user password

For example: 1810000

19.2 Turn off tow truck alert: 180 + user password

For example: 1800000

Description: After receiving the instruction, TLT-1C will return confirmation message: **TOWED ALERT ON.** Now, tow truck alert function has been activated. When ACC is turned off, if it is detected that the device continuously vibrates for 20 seconds, the device will call the first prestored phone number. If it fails (the phone is turned off or cannot be connected), the second and the third phone number will be called in sequence. Finally, the device will send positioning information returned from "request for single positioning" to the prestored numbers. Information status is **STATE: TOWED.**

Note: 1. Default setting is tow truck alert on with vibration time of 20 seconds.

2. If the function is not needed, the user can send instruction 180 to turn off the function. If the function is not turned off, car vibration will trigger alert after parking.

20. Low battery alarm

In case of too low working voltage (electricity quantity), TLT-1C will send position information with information format of returned "request for single positioning" to the prestored three numbers. Information status will be updated to **STATE: LP**. The information will be sent for 3 times with an interval of 1 minute.

21. Instruction to switch on/off ACC status prompt

1>Instruction to switch on ACC status prompt: 091 + user password

For example: 0910000

2>Instruction to switch off ACC status prompt: 090 + user password

For example: 0900000

Description: After receiving instruction 091 and confirming that user password is correct, TLT-1C will send confirmation message to the sender "ACC STATE PROMPT: ON". When ACC is being switched on/off, the device will send current position information to all prestored numbers immediately: "AUTO START/AUTO STOP".

After receiving instruction 090 and confirming that user password is correct, TLT-1C will send confirmation message to the sender "ACC STATE PROMPT: OFF". When ACC is being switched on/off, TLT-1C will not send any data information.

Note: Default setting is ON. This setting isn't influenced by the device switch-off/on until change instruction or restoration operation is performed again.

22. ACC detection and movement warning

Confidential Documents of V-SUN

22.1 **Instruction to set movement warning area:** 008 + user password + Rzzz.z

For example: 0080000R100.0

22.2 Instruction to turn off movement warning: 009 + user password

For example: 0090000

After receiving instruction 008, TLT-1C will return confirmation message: **SET MOVE RADIUS OK**. After receiving instruction 009, TLT-1C will return confirmation message: **MOVE DEFENCE: OFF**.

Description: 1. zzz.z is mobile warning area radius, whose defined domain is [0.1, 999.9] with unit of KM.

2. After mobile warning area is set successfully, if TLT-1C detects that ACC status is switched from on to off, the device will read current position information as origin of coordinates 3 minutes later. Whether GPS data is valid, the device will perform electronic area defence with zzz.z as radius.

While ACC is turned off, if TLT-1C detects that the defence area is stepped beyond, it will send movement warning message to all prestored numbers in message mode. Information status is STATE: ACC OS (or upload current position information to the server in GPRS mode) and dial prestored number. (Whether to call is controlled by 150/151. After restoration, message is sent instead of calling).

When it enters defence area again after stepping beyond defence area, the device will also send message and call prestored phone (or upload position message in GPRS mode). Information status is ACC RS.

When TLT-1C detects that ACC status is switched from off to on, movement warning function will be automatically cancelled. When ACC status is switched from on to off, movement warning function will be activated again.

23. Instruction to set GPS status

Message instruction may make GPS in three statuses: on/off/self adapting. GPS is switched on when delivered from the factory or reset.

23.1 Instruction to turn on GPS

Instruction format: 222 + user password (4 digits)

For example: 2220000

Description: After receiving the instruction, TLT-1C will return confirmation message: GPS ON OK.

23.2 Instruction to turn off GPS

Instruction format: 333 + user password (4 digits)

For example: 3330000

Description: After receiving the instruction, TLT-1C will return confirmation message: GPS OFF OK.

23.3 Instruction for self adapting GPS

Instruction format: 100 + user password

Confidential Documents of V-SUN

For example: 1000000

Description: After receiving the instruction, TLT-1C will return confirmation message: VIBRATION SENSOR ON OK.

Note:

1. If built-in vibration sensor detects device vibration, it will turn on GPS. If it does not detect vibration within 5 minutes, GPS will be turned off automatically.
2. If the car travels on the highway or the flat road for a long time, GPS may remain in sleep status rather than awake for a long time. If the user want to position and track the real-time position at that time, please send "222 + user password" to restart GPS.

24. Instruction to change time zone setting

Instruction format: 896 + user password 4 digits + D + NN

For example: 8960000E08

Description: After receiving the instruction, TLT-1C will return confirmation message: **TIME ZONE SET OK,CURRENT：E8.**

1. D takes E or W to indicate east or west time zone respectively. N takes a 2-digit number (1-12) to indicate time zone number.
2. After success to set 896000E08, all time-related data will be GPS time plus 8. After success to set 896000W07, all time-related data will be GPS time minus 7.
3. Default value is Greenwich time (UTC).

Note: When the instruction is set, data upload time in GPRS mode will not change. If the user wants to change data upload time, please refer to instruction 897 in GPRS mode in the next chapter.

Confidential Documents of V-SUN

Chapter Five Application and Operation in GPRS Mode

Send "710 + user password" to switch to GPRS mode. In the mode, TLT-1C can also prestore three phone numbers (No.1, No.2 and No.3), a set of TCP/IP server IP address and port number, 4-digit GPRS password and an APN number at GPRS access point. Instructions in SMS mode can also be used in GPRS mode.

1. Change GPRS user name

Instruction format: #801#user password# new user name##

For example: #801#0000# username##

Description: After receiving the instruction, TLT-1C will return confirmation message: **CHANGE USERNAME OK.**

2. Change GPRS service password

Instruction format: #802#user password# new service password# old service password##

For example: #802#0000#1111#0000##

Description: After receiving the instruction, TLT-1C will return confirmation message: **CHANGE PASSWORD OK.**

3. Set GPRS access point (Access Point Name)

Instruction format 1: #803#user password#APN##

For example: #803#0000#CMNET##

Instruction format 2: #803#user password #APN#APN user name# APN password##

Description: After receiving the instruction, TLT-1C will return confirmation message: **SET GPRS APN OK.**

Note:

1. As different GSM/GPRS service providers provide different APN, please select instruction format 1 or 2 in accordance with the APN provided by your local service provider.
2. APN is CMNET at the factory or after reset. APN is constituted by 3~35 characters which may be alpha, number, dot (.), underscore (_) or hyphen (-). APN user name and APN password are respectively constituted by 3~30 characters which may be numbers or alphas.

4. Set IP address and port

Confidential Documents of V-SUN

Instruction format: #804#user password # fixed IP address/ domain name #port##

For example: #804#0000#210.83.225.181#6998##，

Or #804#0000#www.gps068.com#6998##

Description: After receiving the instruction, TLT-1C will return confirmation message: **SET SERVER IP AND PORT OK.**

5. Set timing data upload

Timing data upload has the following two modes: traveling car tracking mode and turn-off mode. In accordance with different settings of GPS sampling time and upload quantity, data are intensively uploaded to display real-time trace with more detail in the event of traveling car. Fewer data are uploaded to save SIM flow charge as well as ensure some tracking effects in case of turnoff.

5.1 Timing upload mode for traveling car tracking

Instruction format: #805# user password# sampling interval T# uploaded data quantity each time N##

For example: #805#0000#10#6##

Description: After receiving the instruction and confirming that user password is correct, TLT-1C will send confirmation message to the sender "**SET GPS SAMPLING TIME AND QUANTITY OK**".

Note:

1. Sampling time T takes second as unit, whose defined domain is [10, 59999]. Uploaded data number N for each time has a defined domain of [1, 50].
2. If data is not sent to the server due to network problem or other cause, the data will be backed up automatically and sent to the server again after network resumes to normal. data status is AUTO.
3. If "uploaded data quantity N for each time" is 0, the device will turn off timing upload and send confirmation message to the sender: **GPRS TIMER STOP**.

5.2 Timing upload mode for parking throttle

Instruction format: #809# user password#X#Y##

For example: #809#0000#10#6##

Description: After receiving the instruction and confirming that user password is correct, TLT-1C will send confirmation message to the sender "**GPRS REPORT SAMPLING 2 OK**".

Note:

1. Sampling time X takes second as unit, whose defined domain is [10, 59999]. Uploaded data number Y for each time has a defined domain of [1, 50].

Confidential Documents of W-SUN

2. If data is not sent to the server due to network problem or other cause, the data will be backed up automatically and sent to the server again after network resumes to normal. Uploaded data format is as shown in position information of "immediately upload current position instruction" in GPRS mode and data status is AUTOLOW.
3. If "uploaded data quantity Y for each time" is set as 0, the device will turn off timing upload and send confirmation message to the sender: **GPRS REPORT SAMPLING 2 STOP**.
4. In the above two modes, 300 pieces of data may be backed up for complementary report for blind area. After exceeding 300 pieces, new data will automatically override former backup data.
5. When complementary data is sent, if there are lots of pieces of stored data, 50 pieces will be uploaded at one time. If data number is less than 50, all of them will be uploaded at one time. Current data will not be uploaded until all complementary data are sent.

After making the three basic settings as stated above, you can see running trace of your own car and monitor car movement on product monitoring platform provided by the service provider.

6. Instruction to upload current position immediately

Instruction format: #806# user password##

For example: #806#0000##

Description: After receiving the instruction, TLT-1C will send confirmation message to the first prestored number: "START GPRS UPLOAD" and send data in current storage to the server. Uploaded data status is SMS.

Upload format:

#IMEI number # user name # service password # status # data quantity[CR][LF]

#base station information $ GPRMC……#base station information $ GPRMC……##[CR][LF]

For example:

#123456789000001#SR-6869BE#0000#SMS#3

#25ee0dff$GPRMC,083945.180,A,2233.4249,N,11406.0046,E,0.00,315.00,251207,,,A*6E

#25ee0dff$GPRMC,083950.180,A,2233.4249,N,11406.0046,E,0.00,315.00,251207,,,A*6E

#25ee0dff$GPRMC,083955.180,A,2233.4249,N,11406.0046,E,0.00,315.00,251207,,,A*6E ##

Note: Status of immediately uploaded data format is SMS.

7. Phone upload

Description: When one of the three prestored phone numbers calls in and is hung up after ringing for 2-5 times, it will operate as "immediately upload current position" . Status prompt is CALL.

Confidential Documents of V-SUN

8. Emergency upload

Description: Press SOS key for more than 3 seconds, and the device will operate as "instruction to immediately upload current position"; the status indicates SOS. At the same time, it will call the first prestored number. If it fails (the phone is turned off or cannot be connected), the second and the third phone number will be called in sequence.

Note: If calling status is off, it will send position message to the server instead of calling the phone.

9. Low voltage upload

If working voltage of TLT-1C is lower than the set value, the device will operate as "instruction to immediately upload current position" and add "LP" auxiliary attribute into data status to show current status. The information will be sent for 3 times with an interval of 1 minute.

10. Historical data upload function

In order to use the function in SMS mode, please switch to GPRS to set IP and APN.

10.1 Set historical data record

I**nstruction format:** #807# user password #X##

For example: #807#0000#30##

Description: After receiving the instruction and confirming that user password is correct, TLT-1C will set historical record sampling frequency as X. If X=0, the device will close historical data record. If X!=0, the device will take X seconds as interval to store received GPS data. After success, it will return confirmation message to the sender: SET SAMPLING OK.

Note:

1. X is historical record sampling frequency, whose defined domain is [0, 999] with second as unit.
2. Size of each data is around 100B (BYTE).
3. Memory space distributed to historical data record is 864KB (BYTE) and stack override method is used to update data storage. If X=30, data for about 3 days will be recorded. If X=300, data for about 30 days will be recorded. When stored data reach 864KB, newly received data will override earlier data.
4. If power saving function is activated and TLT-1C remains static for a long time, historical record will be automatically closed until TLT-1C is wakened up and GPS is turned on.

10.2. Instruction to set historical data upload

1>Upload 24-hour historical record:

Instruction format: #808# user password #24##

Confidential Documents of V-SUN

For example: #808#0000#24##

Description: After receiving the instruction, TLT-1C will return confirmation message: START UPLOAD 24H HISTORICAL RECORD. It will send historical data recorded in the past 24 hours to the server with the same format as position information mentioned in "instruction to immediately upload current position" and information status is SOTRAGE.

2>Read all data records:

Instruction format: #808#0000##

Description: After receiving the instruction, TLT-1C will return confirmation message: START UPLOAD ALL HISTORICAL RECORD. It will send all historical data recorded in storage area to the server with the same format as the position information mentioned in "instruction to immediately upload current position" and information status is SOTRAGE.

11. Switch to upload invalid data

Instruction format: 08X + user password 4 digits

Function description: After receiving the instruction, TLT-1C will be able to determine whether to upload invalid data in accordance with X value.

If X=0, the device will turn off the function of uploading invalid data. After success, it will return confirmation message: INVALID DATA UPLOAD: OFF. At this time, invalid data upload will be turned off and only valid data will be uploaded.

Note: 1. Default setting is turning off invalid data upload.

2. The function is available for GPRS mode only.

12. Instruction to change time zone setting in GPRS mode

Instruction format: 897 + user password 4 digits + D + NN

For example: 8970000E08

Description: After receiving the instruction, TLT-1C will return confirmation message: TIME ZONE SET OK,CURRENT：DN（For example: TIME ZONE SET OK,CURRENT：E8）.

Note

1. D takes E or W to indicate east or west time zone. NN takes a 2-digit number (1-12) to indicate time zone number.
2. If successes to set 8970000E08, GPRS data upload time will be GPS time plus 8. If successes to set 8970000W07, GPRS data upload time will be GPS time minus 7.

Confidential Documents of V-SUN

3. Default value is Greenwich time (UTC).

4. The instruction is available for data upload in GPRS mode only.

Instruction set

1. Status and corresponding signs

Status	Corresponding signs
666 single request	SMS
Phone positioning	CALL
Accept calling	ANSWER
Active seeking help	SOS
Electricity shutoff alarm	DEF
Quit from fence	OS
Enter fence	RS
Overspeed alarm	OVERSPEED
Safe speed	SAFESPEED
Historical data upload	STORAGE
Low power alarm	LP
806 single positioning	SMS
Moving vehicle tracking timing upload	AUTO
Timing upload for parking throttle	AUTOLOW
Trailer alarm	TOWED

Confidential Documents of V-SUN

2. Instruction set

Instruction	Description

000+user password	monitor mode cutoff
001+user password	monitor mode open
003+user passwordE/Wxxxx.xxxxN/Syyyy.yyyyRzzz.z	Fence scope setting(unit: degree, minute)
004+user passwordE/Waaa.aaaaaN/Sbb.bbbbbRzzz.z	Fence scope setting(unit: degree,minute)
005+user passwordRzzz.z	Fence scope setting(current position coordinate)
006+user password,Gx,I/O,E/W+N/S,E/W+N/S	Fence scope setting(unit: degree)
008+user password+Rzzz.z	Set and start displacement alarm instruction
009+ user password	close displacement alarm
010+user password	Open electricity shutoff alarm
011+user password	Close electricity shutoff alarm
080+user password	Close invalid data upload under GPRS mode
081+user password	Open invalid data upload under GPRS mode
090+user password	Instruction for closing ACC status shift
091+user password	opening ACC status shift
100+user password	Open electricity saving function
111+user password	Single return base station information
#122#user password#X##	Overspeed alarm setting
140+user password	Closing distance statistics
141+user password	Start distance statistics
142+user password	zero clearing setting of distance statistics
143+user password	Read distance statistics
150+user password	Close calling
151+user password	Start calling
170+user password	Start calling limit
171+user password	Close calling limit
180+user password	Close trailer alarm
181+user password	Start trailer alarm

Confidential Documents of V-SUN

210+user password	Close round fence
211+user password	Start round fence
222+user password	Start GPS
310+user password	Close all square fence
310+user password,Gx	Close single square fence
311+user password	Start all square fence
311+user password,Gx	Start single square fence
333+user password	Close GPS
4xx+user password	Timing return positioning information
55x+user password	Set returning base station quantity
665+user password+HHMM	Set daily timing report
665+user password+OFF	Close daily timing report
666+user password	Single positioning return user number
667+user password	Return Chinese position information
667+user password+MAP	Return Chinese address and screenshot
667+user password+MAP,WWW,HHH,ZZ	Return Chinese address and screenshot
668+user password	Return google map screenshot link
668+user password，WWW,HHH,ZZ	Return google map screenshot link
669+user password	Return map link
700+user password	SMS mode
710+user password	GPRS mode
777+new user password+old user password	Change user password
900+user password	Pre-shutoff electricity/fuel
901+user password	Shutoff electricity/fuel
902+user password	Pre-restore electricity/fuel
903+user password	Restore electricity/fuel
940+user password	Single shutoff electricity/fuel
941+user password	Restore electricity/fuel
*prestored number*user password*sequence**	Change pre-stored number

Confidential Documents of V-SUN

#801#user password#new user name##	Change GPRS user name
#802#user password#new service password#old service password##	Change GPRS service password
#803#user password#APN##	Set GPRS access point
#803#user password#APN#APN user name#APN password##	Set GPRS access point
#804#user password# fixed IP address and port##	Set IP address and port number
#805#user password#sampling interval T# upload quantity each time##	Set timing upload mode for Moving vehicle tracking
#806#user password##	Single request uploading current position
#807#user password#X##	Set historical rewire sampling rate
#808#user password#24##	Upload 24h historical data
#808#user password##	Upload all historical data
#809#user password#x#y##	Set timing upload mode for Parking throttle
896+user password+D+NN	Set time zone
897+user password+D+NN	Set GPRS time zone

Confidential Documents of V-SUN

Warranty

The following after services are provided in order to serve and satisfy the customers:

Ⅰ. Warranty scope:

1. The product may be replaced free of charge within 30 days since purchase in the event that it is ineligible when normal operation (man-made sabotage excluded) and without dismantlement.

2. The product will be maintained and repaired by V-SUN free of charge within one year after purchase if it meets with trouble in normal operation due to ineligible quality and without dismantlement.

3. The product shall be repaired upon payment beyond warranty period.

4. the product shall be repaired after the authorization of V-SUN.

Ⅱ. Exemption clauses

Any damage or malfunction of fittings incurred by user's improper operation, maintenance, or storage;
2. Any damage or malfunction caused due to majeure such as rain, natural disaster, etc.

The instruction manual subjects to successive update without prior notice. Please contact our sales manager or technicians if needed.

Confidential Documents of V-SUN