FMA2YX User Manual

V0.04

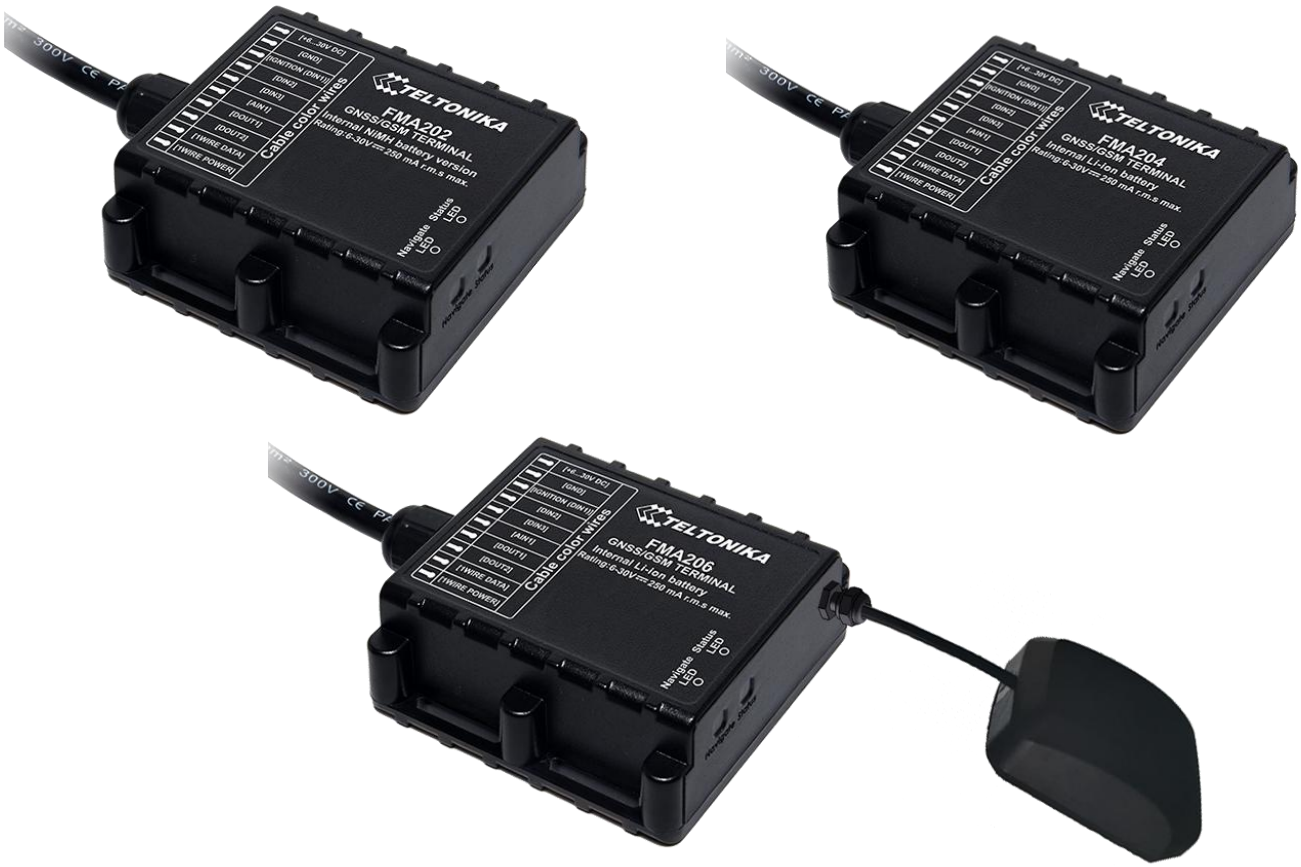

Table of contents

1 INTRODUCTION....6

1.1 ATTENTION.... 6
1.2 INSTRUCTIONS OF SAFETY....6
1.3 LEGAL NOTICE.... 7
1.4 ABOUT DOCUMENT....7

2 BASIC DESCRIPTION....7

2.1 PACKAGE CONTENTS.... 8
2.2 BASIC CHARACTERISTICS....8
2.3 TECHNICAL FEATURES....9
2.4 TECHNICAL INFORMATION ABOUT INTERNAL BATTERY.... 10
2.5 ELECTRICAL CHARACTERISTICS.... 11
2.6 ABSOLUTE MAXIMUM RATINGS.... 12

3 CONNECTION, PINOUT, ACCESSORIES.... 13

3.1 HOW TO INSERT SIM CARD AND HOW TO CONNECT BATTERY INTO FMA2YX DEVICE:....13
3.2 INSTALLING FMA2YX DRIVERS.... 14
3.3 NAVIGATE LED.... 16
3.4 STATUS LED....16
3.5 MAIN CABLE WIRING....16
3.6 USB CONNECTION....18
3.7 ACCESSORIES.... 19

4 FIRMWARE.... 22

4.1 UPDATING FIRMWARE USING USB CABLE.... 22

5 OPERATIONAL BASICS.... 23

5.1 OPERATIONAL PRINCIPALS....23
5.2 SLEEP MODES.... 23
5.2.1 GPS Sleep mode.... 23
5.2.2 Deep Sleep mode.... 24
5.3 VIRTUAL ODOMETER.... 25
5.4 FEATURES.... 25
5.4.1 Scenarios....25
5.4.2 Trip....26
5.4.3 Geofencing....27
5.4.4 iButton list....27
5.5 CONFIGURATOR.... 27
5.6 RECORD STORAGE....30
5.7 SYSTEM SETTINGS....30
5.8 RECORDS SETTINGS....31
5.9 GSM SETTINGS, GPRS PART....32
5.10 GSM SETTINGS, SMS PART.... 32
5.11 GSM SETTINGS, OPERATOR LIST.... 33
5.12 DATA ACQUISITION MODE SETTINGS.... 35
5.13 FEATURES SETTINGS.... 39
5.13.1 Scenarios settings.... 40
5.13.2 Trip settings.... 41
5.13.3 Geofencing settings.... 43
5.13.4 SMS events....45
5.14 I/O SETTINGS.... 50
5.14.1 Monitoring....52
5.14.2 Event Generating....53
5.14.3 Hysteresis....53

6 SMS COMMAND LIST....54

6.1 SMS COMMAND LIST....54

6.1.1 "getstatus"....55

6.1.2 "getweektime"....55

6.1.3 "getops"....56

6.1.4 "getcfgtime"....56

6.1.5 "getgps"....56

6.1.6 "ggps"....56

6.1.7 "getver"....57

6.1.8 "getinfo"....57

6.1.9 "getio"....58

6.1.10 "readio #"....58

6.1.11 setdigout ## Y1 Y2....58

6.1.12 "getparam ####"....58

6.1.13 "setparam #### #"....59

6.1.14 "getparam 1271 #/212 #"....59

6.1.15 "setparam 1271 #"....59

6.1.16 "readops #"....59

6.1.17 "flush #,#,#,#,#,#,#"....59

6.1.18 "sn #"....60

6.1.19 "banlist"....60

6.1.20 "crashlog"....60

6.1.21 "setkey # #"....60

6.1.22 "delkey # "....60

6.1.23 "setacc"....60

7 DEBUG MODE....61

8 PARAMETER LIST....62

8.1 PARAMETERS VALUE TYPES....62

8.2 SYSTEM PARAMETERS....62

8.2.1 Sleep Mode (ID=1000)....62

8.2.2 Sleep timeout (ID=200)....62

8.2.3 Analog Input value range (ID=1001)....62

8.2.4 Stop Detection Source (ID=1002)....63

8.2.5 Static Navigation Mode (ID=1003)....63

8.2.6 Ignition source (ID=1004)....63

8.2.7 High Voltage level (ID=1005)....63

8.2.8 Low Voltage level (ID=1006)....64

8.2.9 Records Saving/Sending without time synchronization (ID=201)....64

8.2.10 GNSS settings (ID=202)....64

8.2.11 GNSS fix Timeout (ID=1007)....64

8.2.12 NTP Time Synchronization (ID=1008)....64

8.3 RECORDS PARAMETERS....65

8.3.1 Sorting (ID=1010)....65

8.3.2 Active Data Link Timeout (ID=1011)....65

8.3.3 Server Response Timeout (ID=1012)....65

8.4 GSM PARAMETERS....66

8.4.1 GPRS content activation (ID=1240)....66

8.4.2 APN Name (ID=1242)....66

8.4.3 APN username (ID=1243)....66

8.4.4 APN Password (ID=1244)....66

8.4.5 Domain (ID=1245)....67

8.4.6 Target Server Port (ID=1246)....67

8.4.7 Protocol (ID=1247)....67

8.4.8 Always online (ID=1248)....67

8.4.9 SMS Login (ID=1252)....67

8.4.10 SMS Password (ID=1253)....68

8.4.11 SMS data sending settings (ID=1250).....68
8.4.12 SMS Data send week time schedule (ID=1273).....68
8.4.13 Authorized phone numbers (ID=1260-1269).....68
8.4.14 SMS Event PreDefined Numbers (ID=150-159).....69
8.4.15 Operator List (ID=1271).....69
8.4.16 Black Operator list (ID= 1272).....69
8.5 DATA ACQUISITION MODES PARAMETERS.....69
8.5.1 Home Network GSM operator code "Vehicle on STOP" parameters.....69
8.5.2 Home Network GSM operator code "Vehicle MOVING" parameters.....71
8.5.3 Roaming Network GSM operator code "Vehicle on STOP" parameters.....73
8.5.4 Roaming Network GSM operator code "Vehicle MOVING" parameters.....73
8.5.5 Unknown Network GSM operator code "Vehicle on STOP" parameters.....75
8.5.6 Unknown Network GSM operator code "Vehicle MOVING" parameters.....76
8.6 FEATURES PARAMETERS.....78
8.6.1 Green driving scenario (ID=1890).....78
8.6.2 Green Driving digital output control (ID=1891).....78
8.6.3 Green Driving source (ID=1909).....78
8.6.4 Max Acceleration Force (ID=1892).....78
8.6.5 Max Braking Force (ID=1893).....78
8.6.6 Max Cornering Force (ID=1894).....79
8.6.7 Overspeeding scenario (ID=1895).....79
8.6.8 Over Speeding digital output control (ID=1896).....79
8.6.9 Max allowed speed (ID=1897).....79
8.6.10 Jamming scenario (ID=1898).....79
8.6.11 Jamming digital output control (ID=1899).....80
8.6.12 Jamming sensitivity (ID=1900).....80
8.6.13 Jamming Timeout (ID=1901).....80
8.6.14 Jamming Pulse duration (ID=1902).....80
8.6.15 Immobilizer scenario (ID=1903).....80
8.6.16 Immobilizer digital output control (ID=1904).....81
8.6.17 iButton list checking (ID=1905).....81
8.6.18 Immobilizer ignition off timeout (ID=1906).....81
8.6.19 iButton detect (ID=1907).....81
8.6.20 iButton detect digital output control (ID=1908).....81
8.6.21 Trip (ID=1280).....82
8.6.22 Start Speed (ID=1281).....82
8.6.23 Ignition Off Timeout (ID=1282).....82
8.6.24 Trip Continuous distance counting (ID=1283).....82
8.6.25 Remember iButton ID (ID=1284).....82
8.6.26 Odometer value (ID=1285).....83
8.6.27 Geofencing.....83
8.6.28 AutoGeofencing.....85
8.6.29 iButton List (ID=3500-3999).....86
8.7 I/O PARAMETERS.....87
8.7.1 I/O#1 property parameter (ID=1300).....87
8.7.2 I/O#1 priority (ID=1301).....87
8.7.3 I/O#1 High level (ID=1302).....87
8.7.4 I/O#1 Low level (ID=1303).....88
8.7.5 I/O#1 logic operand (ID=1304).....88
8.7.6 I/O#1 averaging length (ID=1305).....88
8.7.7 I/O#2 exception for a Digital input 3/Analog input option (ID=1320).....90
8.8 SMS EVENT CONFIGURATION.....90
8.8.1 I/O#1 element SMS event configuration (ID=100).....90

9 MOUNTING RECOMMENDATIONS.....92

9.1 CONNECTING WIRES.....92
9.2 CONNECTING POWER SOURCE.....92
9.3 CONNECTING IGNITION WIRE.....92

9.4 CONNECTING GROUND WIRE.....92

10 FMA2YX INSTALLATION INSTRUCTION.....93

10.1 POSSIBLE MOUNTING ZONES.....94

10.1.1 Trucks.....94

10.1.2 Tractors.....95

10.1.3 Motor bikes.....95

10.1.4 Light vehicles.....96

10.1.5 Recommended mounting positions.....97

10.1.6 Restrictions.....98

10.1.7 Connecting power wires.....99

10.1.8 Other recommendations.....100

11 DOWNLOADING LOG USING "HERCULES" APPLICATION.....100

12 CHANGE LOG.....102

Records Saving/Sending without time synchronization parameter description modified.....102

1 INTRODUCTION

1.1 Attention

Do not disassemble the device. If the device is damaged, the power supply cables are not isolated or the isolation is damaged, before unplugging the power supply, do not touch the device.

All wireless data transferring devices produce interference that may affect other devices which are placed nearby.

The device must be connected only by qualified personnel.

The device must be firmly fastened in the predefined location.

The programming must be performed using a second class PC (with autonomic power supply).

The device is susceptible to water and humidity in environment with IP class greater than IP67.

Any installation and/or handling during a lightning storm are prohibited.

FMA2YX has USB interface;
Please use cables provided with FMA2YX device.
Teltonika is not responsible for any harm caused by using wrong cables for PC <-> FMA2YX connection.

1.2 Instructions of safety

This chapter contains information on how to operate FMA2YX safely. By following these requirements and recommendations, you will avoid dangerous situations. You must read these instructions carefully and follow them strictly before operating the device!

The device uses SELV limited power source. The device uses a 6 V...30 V DC power supply. The nominal voltage is 12 V DC. The allowed range of voltage is 6 V...30 V DC.

To avoid mechanical damage, it is advised to transport the FMA2YX device in an impact-proof package. Before usage, the device should be placed so that its LED indicators are visible, which show the status of operation the device is in.

When installing the connection cables to the vehicle, the appropriate jumpers of the power supply of the vehicle should be disconnected.

Before dismounting the device from the vehicle, the connection cables must be disconnected.

The device is designed to be mounted in a zone of limited access, which is inaccessible for the operator. All related devices must meet the requirements of standard EN 60950-1.

The device FMA2YX is not designed as a navigational device for boats.

1.3 Legal Notice

Copyright © 2017 Teltonika. All rights reserved. Reproduction, transfer, distribution or storage of part or all of the contents in this document in any form without the prior written permission of Teltonika is prohibited.

Other products and company names mentioned here may be trademarks or trade names of their respective owners.

The manufacturer reserves the right to make changes and/or improvements at any time in design, functionality, parameters and electrical characteristics without any prior notice and without incurring obligations.

1.4 About document

This document contains information about the architecture, possibilities, mechanical characteristics, and configuration of the FMA2YX device.

Acronyms and terms used in document

PC – Personal Computer,

GPRS – General Packet Radio Service,

GPS – Global Positioning System,

GSM – Global System for Mobile Communications,

SMS – Short Message Service,

AC/DC – Alternating Current/Direct Current,

I/O – Input/Output,

SIM Card – Subscriber Identity Module for a mobile phone,

USB - Universal Serial Bus,

TCP - Transmission Control Protocol,

UDP - User Datagram Protocol,

Record – AVL data stored in FMA2YX memory. AVL data contains GPS and I/O information,

AVL packet - data packet that is being sent to server during data transmission. AVL packet contains from 1 to 50 records.

2 BASIC DESCRIPTION

FMA2YX is a terminal with GPS and GSM connectivity, which is able to determine the object's coordinates and transfer them via the GSM network. This device is perfectly suitable for applications, which need location acquirement of remote objects. It is important to mention that FMA2YX has additional inputs and outputs, which let you control and monitor other devices on remote objects. FMA2YX also has a USB port for device status log output and entering configurations.

2.1 *Package contents*[1]

The FMA2YX device is supplied to the customer in a cardboard box containing all the equipment that is necessary for operation. The package contains:

FMA2YX device with case and wires;
USB cable (optional);
Integrated Ni-MH battery 7.2V, 400mAh for FMA202 or FMA206 device;
Integrated Li-ion battery 3,7V, 1800 mA, for FMA204 device;
GNSS antenna for FMA206 device.

2.2 *Basic characteristics*

GSM / GPRS features:

- Teltonika TM2500 quad band module (GSM 850 / 900 / 1800 / 1900 MHz);
- GPRS class 12;
- SMS (text, data).
- Integrated GNSS receiver.
- Up to -162 dBm GNSS receiver sensitivity.

GNSS features:

- Tracking: 33/ 99 acquisition channels;
- Up to -165 dBm sensitivity;
- Hot start < 1s;
- Warm start < 25s;
- Cold start < 35s;
- NMEA -183 protocol;
- GPS, GLONASS, GALILEO, BEIDOU, SBAS, QZSS, DGPS, AGPS;
- Accuracy < 3m.

Hardware features:

- Cortex®-M3 processor;
- 1 MB internal Flash memory[2];
- Built-in movement sensor;
- Integrated Ni-MH battery 7.2V, 400mAh for FMA202 or FMA206 device;
- Integrated Li-ion battery 3,7V, 1800 mA, for FMA204 device ;
- Internal High Gain GSM antenna;
- Internal High Gain GNSS antenna[3];

Interface features:

- Power supply: 6 … 30V;
- USB port;
- 3 digital inputs;
- 1 analog input;
- 2 open collector digital outputs (connecting external relays, LED's, buzzers etc.);

[1] Package content depends on Order Code, and can be customized by customer needs.
[2] Teltonika reserves the right to modify the functionality of the device without any prior notice.
[3] For FMA206 external GNSS antenna.

- 1Wire® temperature sensor;
- 1Wire® iButton;
- 2 LED's indicating device status.

Special features:

- High Quality track even in high density urban canyon;
- Ready for harsh environment;
- Any element event triggers (external sensor, input, speed, temperature, etc.);
- Highly configurable data acquisition and sending;
- Multiple Geo-fence areas;
- Sleep mode;
- Deep sleep mode;
- Configurable scenarios available;
- Real-time process monitoring;
- Authorized number list for remote access;
- Firmware update over GPRS or USB port;
- Configuration update over GPRS, SMS or USB port;
- TCP/IP or UDP/IP protocol support;
- 3500 record storing;
- Overvoltage protection.

Table 1. FMA2YX Supply voltage.

Description	Voltage	Duration
Normal operation	6-30V	Unlimited
Protection turns on, device turns off.	34V	Unlimited
Maximum voltage	<70V	Unlimited
Maximum voltage impulse	90V	5 milliseconds

2.3 Technical features

Table 2. FMA2YX specifications.

Part name	Physical specification	Technical details
Navigation LED	LED	Power supply 6...30 V DC 2W Max Energy consumption:[1] FMA202 GPRS: ⎓ average 37,2 mA r.m.s, FMA204 GPRS: ⎓ average 35,9 mA r.m.s, FMA202 Nominal: ⎓ average 27,3 mA r.m.s, FMA204 Nominal: ⎓ average 21,1 mA r.m.s, FMA202 Sleep: ⎓ average 15,5 mA, FMA204 Sleep: ⎓ average 15,7 mA, FMA202 Deep Sleep: ⎓ average 2 mA,[2] FMA204 Deep Sleep: ⎓ average 2,6 mA, FMA202 Battery charge current: ⎓ max. 80
Modem LED	LED	
USB	Mini USB socket	

[1] Energy consumption has been tested at 12V voltage.
[2] When in Deep Sleep mode, data storing and sending is not activated.

		mA; FMA204 Battery charge current: ⎓ max. 207 mA; Operation temperature: -25°C ... +55°C Storage temperature: -40°C ... +70°C Storage relative humidity 5 ... 95 % (no condensation)

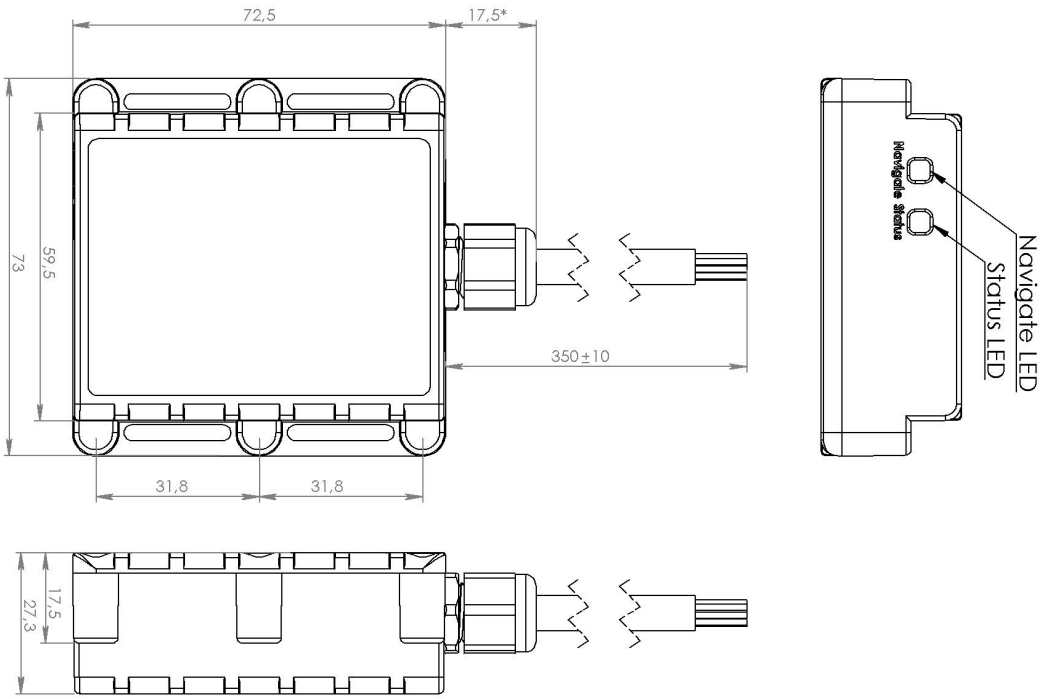

Figure 1. FMA2YX view & dimensions (tolerance ±2mm)

2.4 Technical Information about internal battery

Table 3. Li-ion and Ni-MH batterys details.

Internal back-up battery	Battery voltage V	Nominal capacity (mAh)	Power(Wh)	Charging temperature °C
Li-ion rechargeable battery	3,75 ~ 3,90	1800	6,75 – 7,02	0 – 50
Ni-MH Prismatic Battery pack	7,2 ~ 7,5	400	2,95 – 3,07	0 – 50

FMA2YX internal battery is used for detecting external voltage disconnection.

CAUTION: RISK OF EXPLOSION IF BATTERY IS REPLACED BY AN INCORRECT TYPE. DISPOSE OF USED BATTERIES ACCORDING TO THE INSTRUCTIONS.

Battery should not be disposed of with general household waste.
Bring damaged or worn-out batteries to your local recycling center or dispose them to battery recycle bin found in stores.

2.5 Electrical characteristics

Table 4. FMA2YX electrical characteristics.

CHARACTERISTIC DESCRIPTION \ VALUE	Min.	Typ.	Max.	Unit
Supply Voltage:				
Supply Voltage (Recommended Operating Conditions)	6		30	V
Digital Output (Open Drain grade):				
Drain current (Digital Output OFF)			120	µA
Drain current (Digital Output ON, Recommended Operating Conditions)			300	mA
Static Drain-Source resistance (Digital Output ON)			120	mΩ
Digital Input:				
Input resistance (DIN1)		59.9		kΩ
Input resistance (DIN2, DIN3)		67.5		kΩ
Input Voltage (Recommended Operating Conditions)	0		60	V
Input Voltage threshold (DIN1)	7.5	7.7	8	V
Input Voltage threshold (DIN2, DIN3)	2.5	2.7	3	V
Analog Input:				
Input Voltage (Recommended Operating Conditions), Range1	0		10	V
Input resistance, Range1		120		kΩ
Input Voltage (Recommended Operating Conditions) Range2	0		30	V
Input resistance, Range2		146.7		kΩ
Output Supply Voltage 1-Wire:[1]				
Supply Voltage		3.8		V
Output inner resistance	450		600	mΩ
Output current (U_{out} > 3.0V)			75	mA
Short circuit current (U_{out} = 0)			75	mA

[1] 1-wire Supply voltage PIN is dedicated for 1-wire devices ONLY, do not use it for any other purpose.

Note: Analog Input error margin can increase if temperature varies.

2.6 Absolute Maximum Ratings

Table 5. FMA2YX absolute maximum ratings.

CHARACTERISTIC DESCRIPTION \ VALUE	Min.	Typ.	Max.	Unit
Supply Voltage (Absolute Maximum Ratings)	-32		32	V
Drain-Source clamp threshold voltage (Absolute Maximum Ratings), (I_{drain} = 2mA)			36	V
Digital Input Voltage (Absolute Maximum Ratings)	-32		32	V
Analog Input Voltage (Absolute Maximum Ratings)	-32		32	V

3 CONNECTION, PINOUT, ACCESSORIES

3.1 How to insert SIM card and how to connect battery into FMA2YX device:

①

Open FMA2YX case using screwdriver

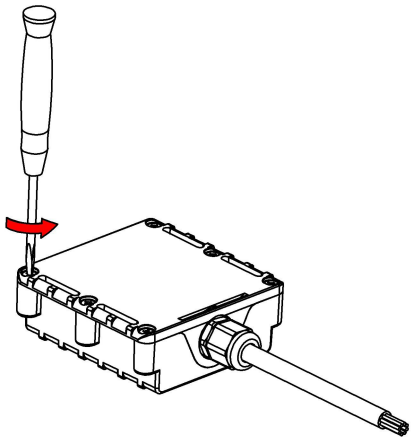

②

Remove FMA2YX case

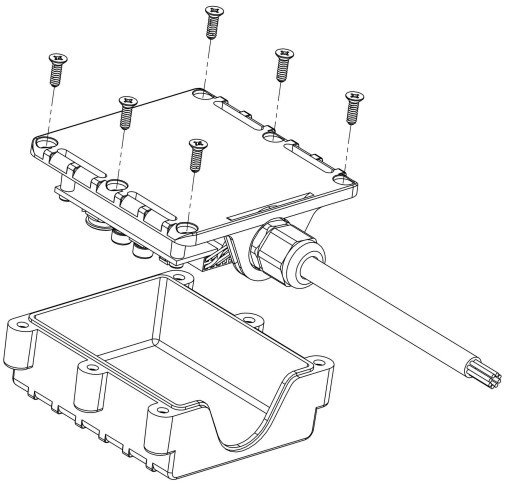

③

Insert SIM card as shown

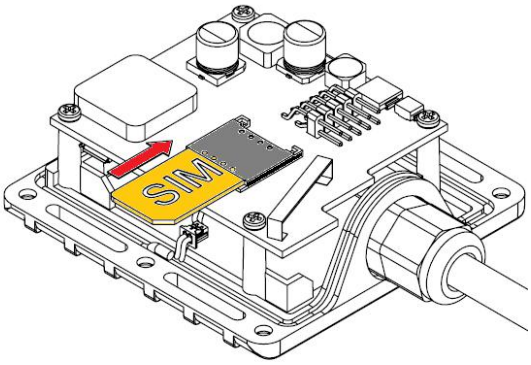

④

Connect battery connector as shown

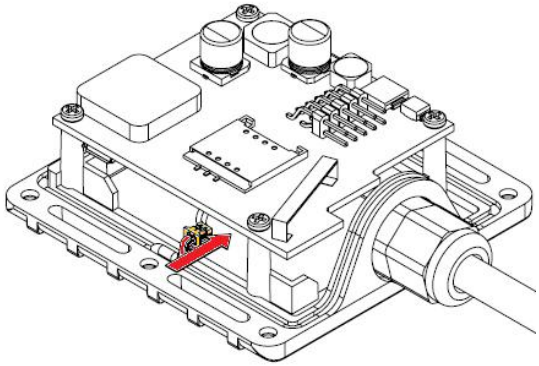

⑤

Attach case, and screw in the screws

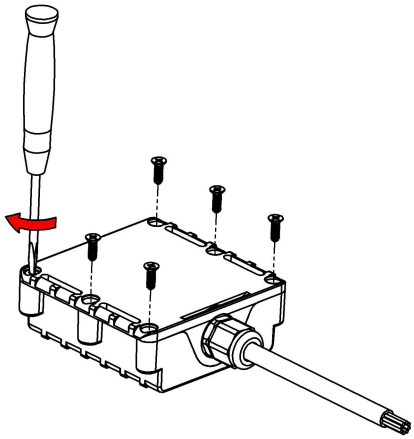

⑥

Device is ready

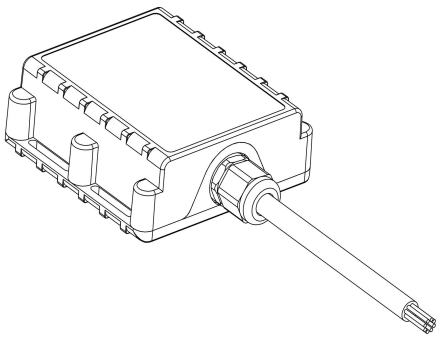

Note: SIM card insertion/removal must be performed when FMB device is powered off – external voltage and battery disconnected. Otherwise SIM card might be damaged or FMB device will not detect it.

3.2 Installing FMA2YX drivers

Table 6. Software requirements.

Operating system (OS)	Version	MS .NET Framework version
Windows XP with SP3 or later	32 bit and 64 bit	**MS .NET Framework 4** https://www.microsoft.com/en-US/Download/confirmation.aspx?id=17718 http://avl1.teltonika.lt/downloads/software/Framework/.NET%20Framework%204/dotNetFx40_Full_x86_x64.exe With **MS .NET Framework 4 update KB2468871-v2** update https://www.microsoft.com/en-us/download/details.aspx?id=3556 http://avl1.teltonika.lt/downloads/software/Framework/.NET%20Framework%204%20update%20KB2468871-v2/
	32 bit 64 bit	**NDP40-KB2468871-v2-x86.exe** **NDP40-KB2468871-v2-x64.exe or NDP40-KB2468871-v2-IA64.exe**
Windows Vista Windows 7 Windows 8/8.1 Windows 10	32 bit and 64 bit	**MS .NET Framework 4.6.2** https://www.microsoft.com/en-us/download/confirmation.aspx?id=53344 http://avl1.teltonika.lt/downloads/software/Framework/.NET%20Framework%204.6.2/NDP462-KB3151800-x86-x64-AllOS-ENU.exe

Drivers:

Please download Virtual COM Port drivers from Teltonika website:
http://avl1.teltonika.lt/downloads/FM11YX/vcpdriver_v1.3.1_setup.zip

Installing drivers:

Extract and run VCPDriver_V1.3.1_Setup.exe. This driver is used to detect FMA2YX device connected to the computer. Click 'Next' in driver installation window (figures below):

Figure 2. Driver installation window

This will launch device driver installation wizard. In the following window click 'Next' button again:

Figure 3. Driver installation window

Setup will continue installing drivers and will display a window about successful process at the end. Click 'Finish' to complete setup:

Figure 4. Driver installation window

You have now installed drivers for FMA2YX device successfully.

3.3 Navigate LED

Table 7. FMA2YX navigation LED description.

Behaviour	Meaning
Permanently switched on	GPS signal is not received
Blinking every second	Normal mode, GPS is working
Off	GPS is turned off because: Deep sleep mode Or GPS antenna short circuited

3.4 Status LED

Table 8. FMA2YX status LED description.

Behaviour	Meaning
Blinking every second	Normal mode
Blinking every 2 seconds	Deep sleep mode
Blinking fast for a short time	Modem activity
Blinking fast constantly	Boot mode
Off	Device is not working Or Device firmware being flashed

3.5 Main cable wiring

Table 9. FMA2YX pinout description.

Nr.	Wire Name	Description	Wire color
1	VCC (6÷30)V DC (+)	Power supply for module. Power supply range (6...30) V DC	Red
2	DOUT 2	Digital output. Channel 2. Open collector output. Max. ⎓ 300mA.	Violet
3	DOUT 1	Digital output. Channel 1. Open collector output. Max. ⎓ 300mA.	White/Orange
4	DIN 2	Digital input, channel 2	White/Green
5	DIN 1	Digital input, channel 1 DEDICATED FOR IGNITION INPUT	Yellow
6	GND(VCC(6÷30)V DC)(-)	Ground pin. (6÷30)V DC (—)	Dark
7	AIN 1	Analog input, channel 1. Input range: 0-30V/0-10V DC	Grey
8	DATA_DALLAS	Data channel for Dallas 1-Wire® devices	Green
9	DIN 3	Digital input, channel 3	White
10	Ucc DALLAS	+ 3,8 V output for Dallas 1-Wire® devices. (max 20mA)	Blue

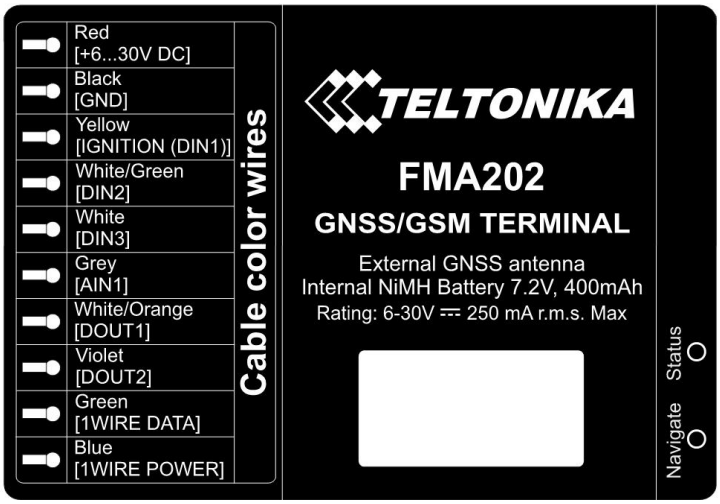

Figure 5. FMA202 sticker

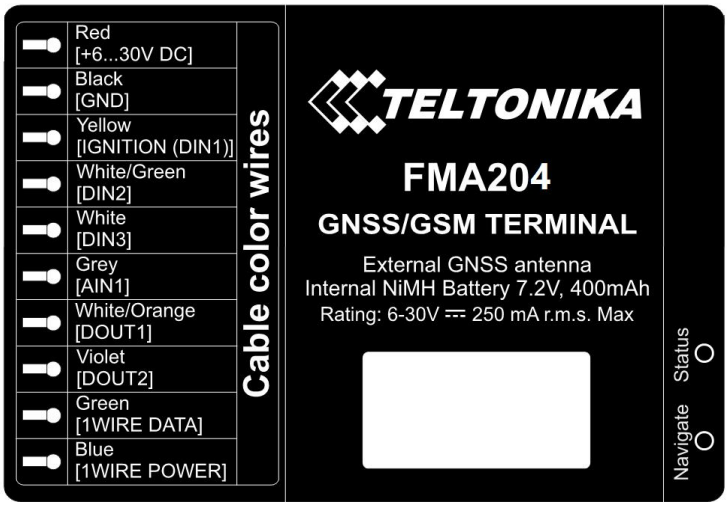

Figure 6. FMA204 sticker

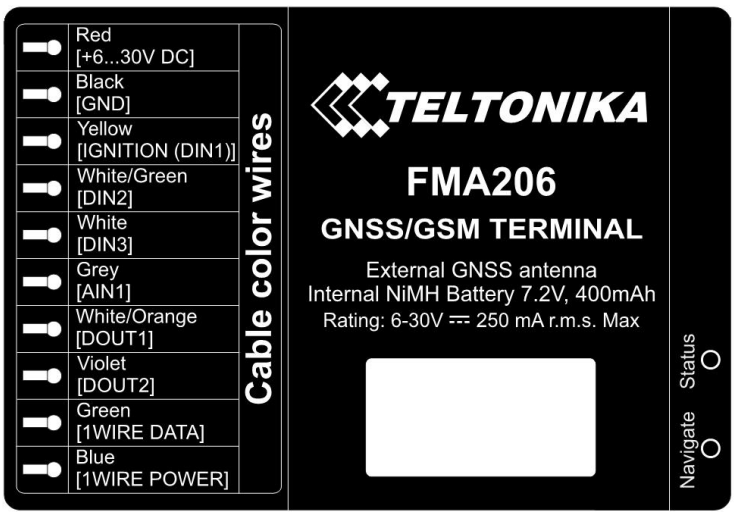

Figure 7. FMA206 sticker

3.6 USB connection

For connecting FMA2YX device to PC, special USB cable is used. On one side of the cable there is usual USB plug, which should be connected to PC. Other side of the cable has connector to connect with FMA2YX. Cable can be connected after removing cover of FMA2YX:

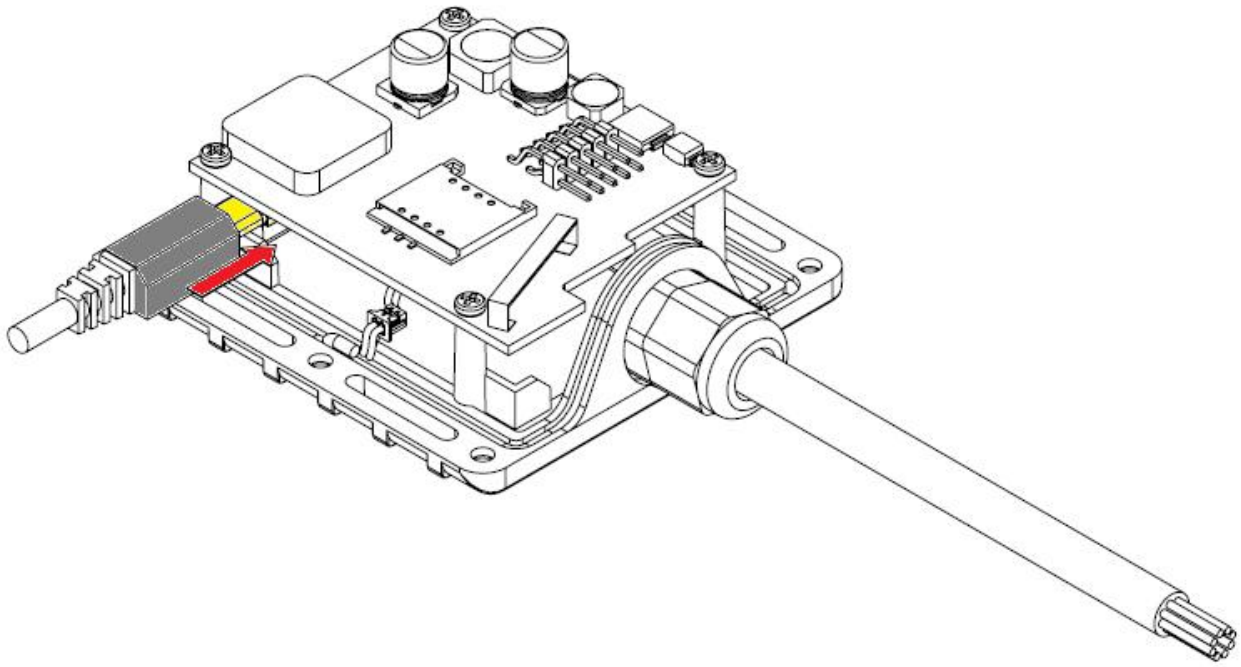

Figure 8. USB cable connection to the FMA2YX device

Please note that FMA2YX device must be connected to the power supply before it can be connected to the PC!

When FMA2YX is connected to PC, it creates an STM Virtual COM Port, which can be used as a system port (to flash firmware and configure the device):

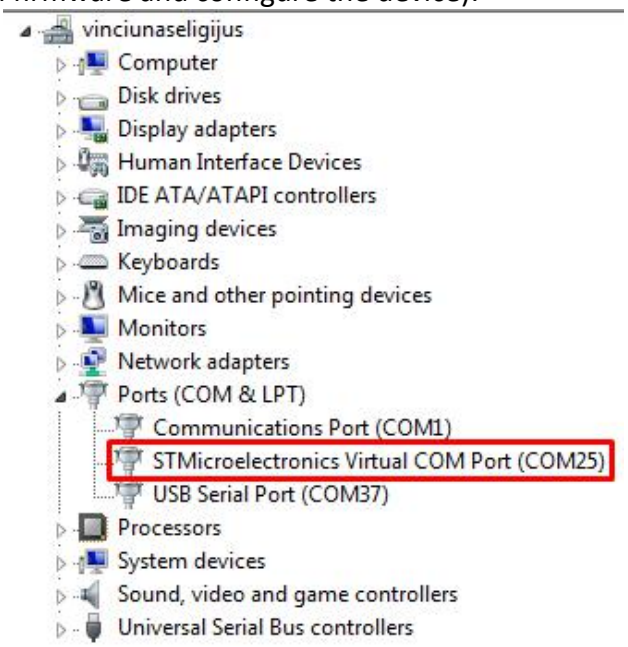

Figure 9. COM-Ports

3.7 Accessories

Note: Accessories are not included in device package, please order them separately.

1 – Wire devices

One of the realized features in FMA2YX is 1-Wire® data protocol, which enables connection of thermometer (DS1820, DS18S20 and DS18B20) and I-Button type: DS1990, DS1991, DS1994, DS1993, DS1992, DS1982, DS1995, DS1985, DS1996, DS1986, DS1971, DS1963L, DS1921, DS1973, DS1904, DS1972, DS1977, DS2413, DS1922/1923, DS1990A, DS1982U, DS1985U, DS1986U (Figures 10 and 11 show FMA2YX and 1-wire® device connection schemes). For additional information please refer to the 1-Wire Design Guide document.

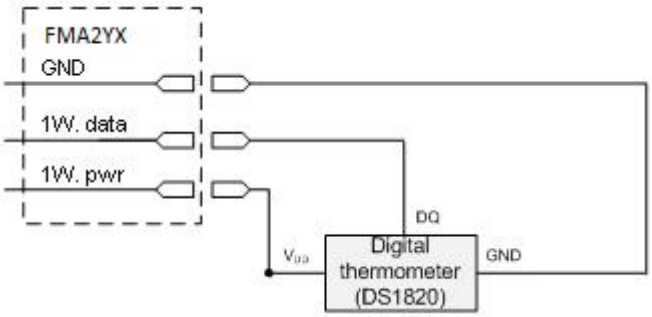

Left row of pins

1W. PWR (FMA2YX – Blue wire)	1
1W. Data (FMA2YX–Green wire)	2
GND (FMA2YX – Black wire)	3
Digital Input	4

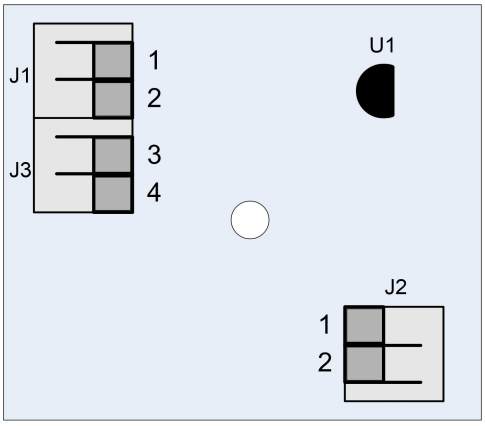

Right row of pins

1	Vpp (+5 Volts DC) – power source for external digital sensor
2	Output from external digital sensor

Figure 10. Digital thermometer DS1820 and TTJ100 connection scheme

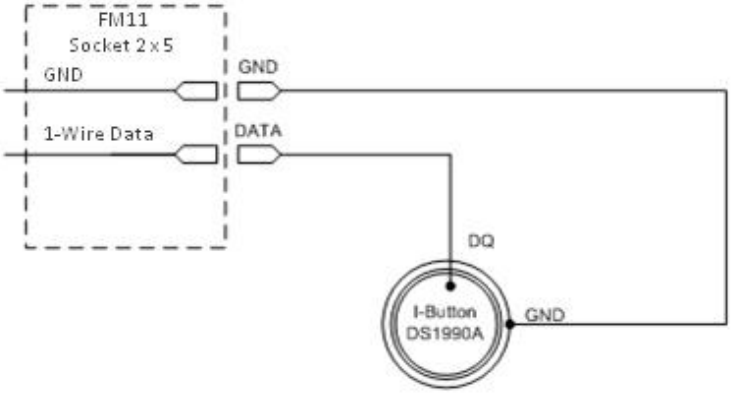

Figure 11. I-Button DS1990A connection scheme

Fuel Tank sensors

A fuel tank level sensor exists in most cars, which shows the approximate fuel level in the driver's indicator panel. It is possible to connect FMA2YX Analog input to it (if sensor returns analogue signal proportional to fuel level). Figure shows the connection scheme to the FMA2YX and fuel tank sensor. After the connection to the tank fuel level sensor, calibration is needed. Calibration is needed because most fuel tank sensors are not linear. Calibration is performed by measuring voltage dependence on volume of fuel in tank.

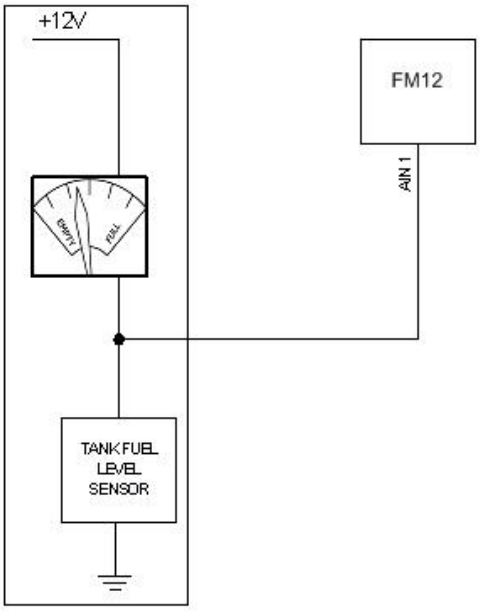

Figure 12. Fuel sensor scheme

Alarm buttons, door sensors, etc.

Alarm buttons, door sensors, ignition, etc. return two states: high or low voltage. Digital inputs are used to read this information. Figure below shows how to connect alarm button, door sensor, etc.

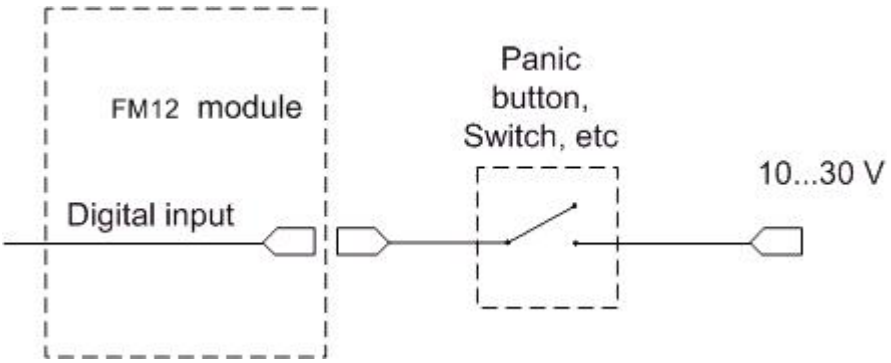

Figure 13. Panic button connection

In cases when sensor output signal is negative, an additional relay has to be installed to convert negative signal to positive.

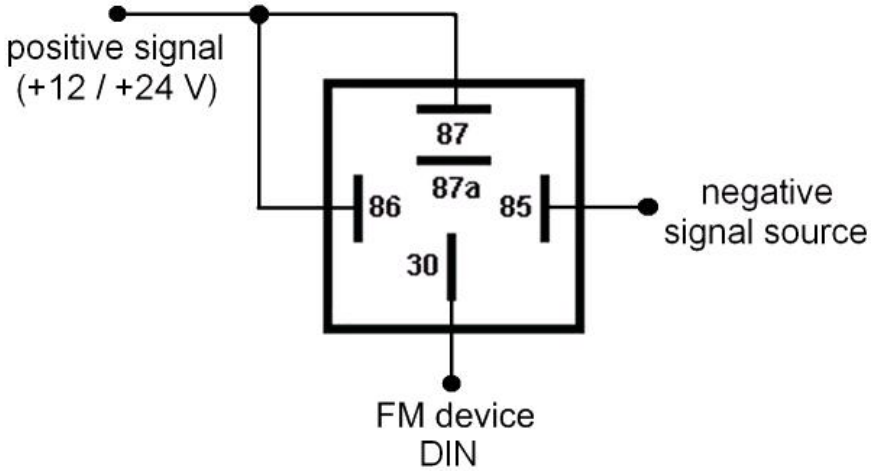

Figure 14. Inverting relay connection

Immobilizer relay

When connected as shown below, FMA2YX disables engine starter when output is OFF. More details about relays can be found below.

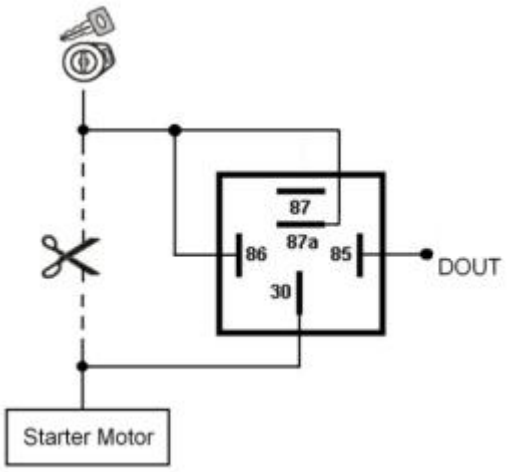

Figure 15. Immobilizer relay connection

Relays

An ordinary automotive relay is used to invert input signal or to immobilize engine starter. Note, that they are available as 12 V or 24 V.

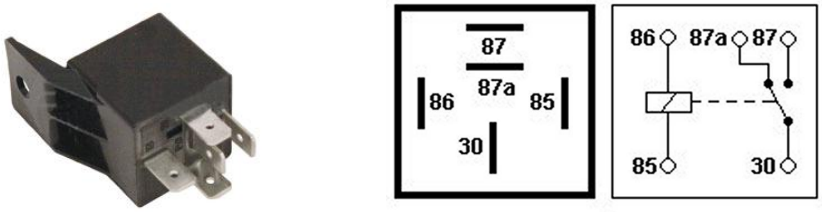

Figure 16. Automotive relay pinout

4 FIRMWARE

4.1 Updating firmware using USB cable

FMA2YX functionality is always improving, new firmware versions are developed. Current module firmware version can be retrieved from Configurator. See configuration description for details.

Contact sales manager to get the latest firmware.

Connect FMA2YX to PC with the USB cable. Launch “Firmware Updater”, select COM port to which device is connected, click connect, and when IMEI and Firmware version fields are filled, start the update. Device needs some time to send IMEI and Firmware version, so do not be afraid if IMEI will not show up immediately, disconnect and after 1-2 minutes try to connect again. Update process may take up to several minutes.

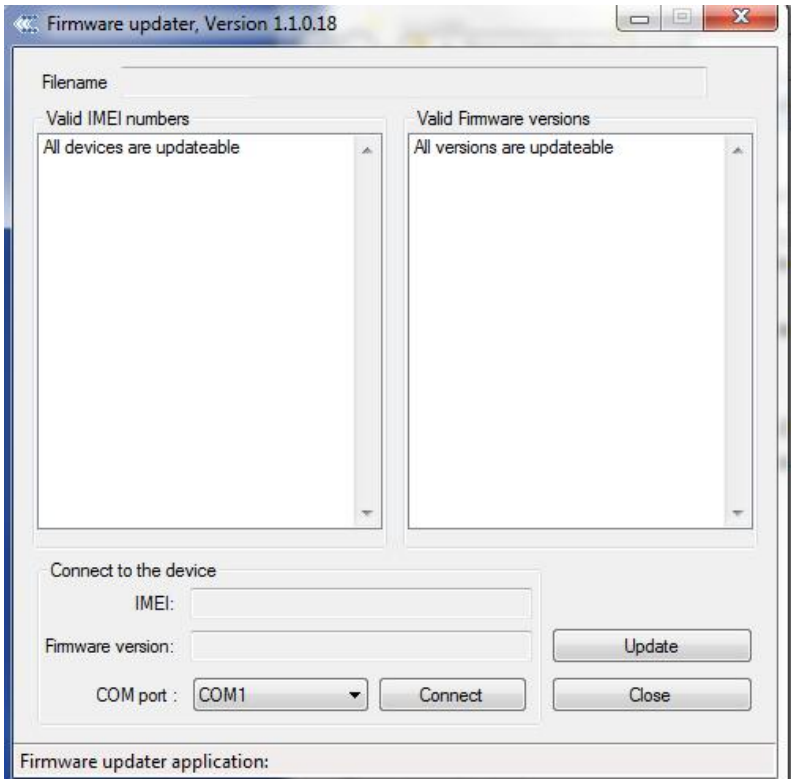

Figure 17. Firmware updater screen

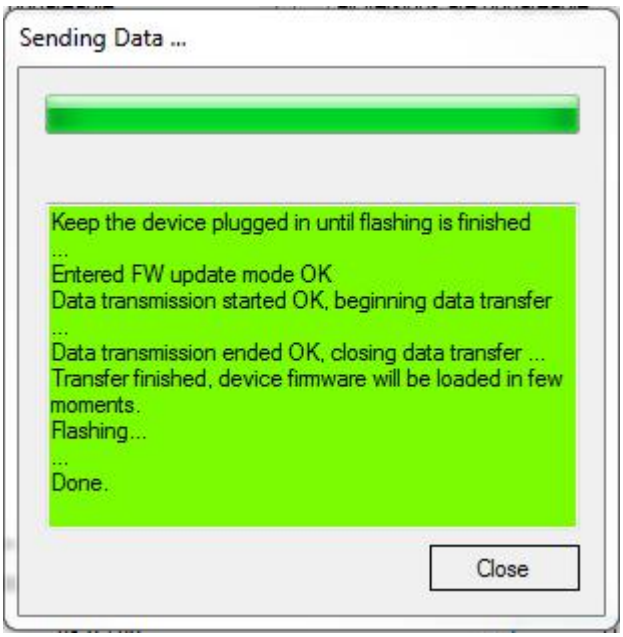

Figure 18. FMA2YX firmware updating finished

When you see a table like in Figure 18, it means that the firmware is flashed to FMA2YX successfully. You may now close the update window and start using your FMA2YX device.

5 OPERATIONAL BASICS

5.1 Operational principals

FMA2YX module is designed to acquire records and send them to the server. Records contain GPS data and I/O information. Module uses GPS receiver to acquire GPS data and is powered with three data acquire methods: time-based, distance-based and angle-based method. Note, that if FMA2YX loses connection to GPS satellites, it continues to make records, however coordinate in these records remains the same (last known coordinate).

GPRS and SMS settings are described in later sections. FMA2YX communicates with server using special data protocol.

FMA2YX can be managed by SMS commands. SMS Command list is described in SMS COMMAND LIST section. Module configuration can be performed over TCP or via SMS.

5.2 Sleep modes

There are two sleep modes: GPS sleep and Deep sleep modes.

5.2.1 GPS Sleep mode

FMA2YX is able to go to GPS sleep mode after configurable Sleep timeout. This timeout (defined period) starts counting when device is in STOP mode. After timeout is reached and all conditions for GPS sleep mode are met, device goes to GPS sleep mode. While in GPS sleep mode, FMA2YX turns GPS module off and it is not making new periodic records. Only event records are being recorded with last known coordinate and sent to AVL server. As a result power usage decreases allowing saving vehicle battery.

FMA2YX can enter GPS sleep mode if **ALL** of these conditions are met:

- FMA2YX has to be configured to work in GPS Sleep mode and sleep timeout is reached;
- Device time must be synchronized with GPS satellites;
- No movement by configured movement source or movement sensor is detected;
- Ignition (configured Ignition Source) is off.

FMA2YX exits GPS sleep mode then if ONE of following conditions is true:

- Movement by Object Motion (Ignition, Msensor, GPS) or external movement sensor is detected;
- Ignition (configured Ignition Source) is turned on.

5.2.2 Deep Sleep mode

While in deep sleep mode, FMA2YX sets GPS receiver to sleep mode and turns off GSM/GPRS module (it is not possible to wake up device via SMS). Despite records with last known coordinate are being saved and send to AVL server (GSM/GPRS module is turned on to send data and after that it is turned off again), power usage is decreased to save vehicle's battery. Note, that power saving depends on two configurable parameters: send period and min. record saving period.

FMA2YX can enter deep sleep mode if **ALL** of these conditions are met:

- FMA2YX has to be configured to work in Deep Sleep mode and Sleep timeout set;
- Device time must be synchronized with GPS satellites;
- No movement by movement sensor is detected;
- Ignition (configured Ignition Source) is off;
- Min. Record Saving Period (Data Acquisition Mode settings) must be bigger than Active Data Link Timeout parameter, that FMA2YX could close GPRS link.
- Send period (Data Acquisition Mode settings) minus Active Data Link Timeout must be more than 90 sec., that FMA2YX could close GPRS link for at least 90 sec.
- USB cable is not connected.

FMA2YX exits deep sleep mode when if **ONE** of following conditions are true:

- Movement by movement sensor is detected;
- Ignition (configured Ignition Source) is turned on;
- USB cable is connected;

Note: In order to save GPRS traffic records saved in deep sleep mode do not contain below listed I/O elements information:
PDOP, HDOP, Odometer, Speedometer, iButton ID, Cell ID, Area Code, Temperature and GPS power

5.3 Virtual odometer

Virtual odometer is used to calculate traveled distance in FMA2YX as a separate I/O element. When FMA2YX detects movement, it starts counting distance using GPS signal: every second it checks current location and calculates distance between current and previous point. It keeps adding these intervals until it is time to make a record, then FMA2YX records its location and adds odometer value, which is equal to the sum of all distances, measured every second. There are two odometer I/O elements: Total distance and Trip distance.

Total distance counts all distance traveled by vehicle. After device restart, the value in this I/O element will not be erased. Total distance value can be changed by SMS command "setparam 1285" (SMS Command list is described in SMS COMMAND LIST section).

Trip continuous distance counting is Trip scenario element and it can be selected from two modes: "NOT" and "Continuous". Both modes requires ignition (configured ignition source) to be turned on.

When "Continuous" mode is selected, all distance calculations are counted from records and summed to one distance. Continuous mode stops counting, when vehicle is at stop and ignition is turned off.

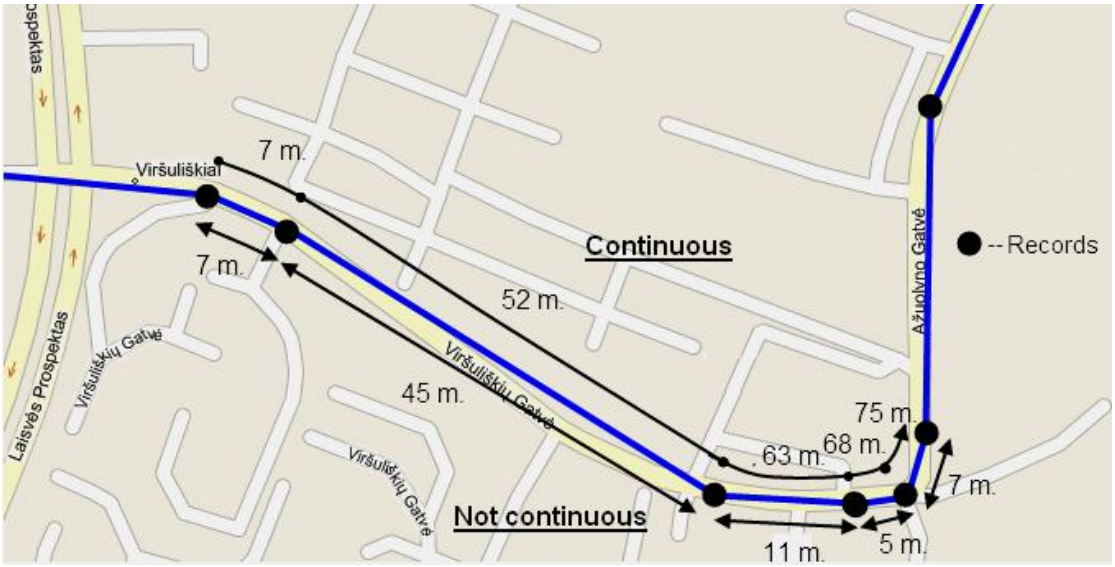

Figure 19. Odometer continuous and Not continuous distance counting parameter example

5.4 Features

Using available features can greatly increase FMA2YX usability options.

5.4.1 Scenarios

Five scenarios are available on FMA2YX device.
Green driving, Over speeding, Jamming detection, Immobilizer and iButton detection scenarios can be used to manage digital output 1 and digital output 2. A single digital output can be controlled by a few scenarios. However, ***it is not recommended to configure Immobilizer and other scenarios on the same digital output.***

Green Driving Scenario. Helps to inspect driver and prevent about harsh driving. Green driving source can be GPS or accelerometer. Scenario continuously monitors: accelerating force, braking force and cornering angles depending on build in accelerometer or depending on GPS. The device inspects driver if needed. Monitoring sensitivity is configurable. The scenario can control DOUT to alert the driver, with, for example, a buzzer or an LED.

To save GPRS traffic Green Driving **event** will be **generated (included into sent records) only** when FMA120 measured values are higher than those set in configuration, without additional I/O settings.

To prevent generating false events, harsh acceleration and harsh braking is monitored only when following conditions are fulfilled:

- Ignition is ON (configured Ignition Source = 1)
- Vehicle speed is equal or higher than 10km/h

Harsh cornering is monitored only when following conditions are fulfilled:

- Ignition is ON (configured Ignition Source = 1)
- Vehicle speed is equal or higher than 30km/h

Device calibration for Green driving – after each restart device automatically calibrates it's position with current XYZ coordinates, however you can do it without restart with SMS command "setacc" (Read more about it at 6.1.24). Before calibration, device must be mounted using mounting recommendations whose can be found 10.1.5 on this document.

Note: ECO Driving Scenario is a factor on various cars and various drivers testing phase and can be subject to changes. Teltonika is constantly working on improvement of the functionality of the devices, and strongly recommends using the latest version of the firmware.

Over Speeding Scenario. Helps to inspect the driver and prevent exceeding the fixed speed limit. The scenario can control DOUT to alert the driver, with, for example, a buzzer or an LED.

Jamming scenario. Radio jamming is the (usually deliberate) transmission of radio signals that disrupt communications by decreasing the signal to noise ratio. When jamming detection is enabled, FMA2YX informs (with buzzer or LED, connected to DOUT) driver about jamming event. Jamming can be deactivated with iButton.

Immobilizer Scenario. Vehicle can be used only if an iButton is connected and it passes the security check. The scenario can control DOUT to alert the driver, with, for example, a buzzer or LED. *iButton list checking* parameter lets the user use this scenario for authorization. The parameter allows up to 500 unique iButton owners (specified in the iButton list) to be authorized to use the vehicle.

iButton detect scenario. If iButton is read, scenario activates configured DOUT for 500 ms. Second activation will be available only when iButton I/O element value goes back to 0, or another iButton is read.

5.4.2 Trip

Trip customizable feature enables user extended monitoring of performed trips (from engine start at present location to engine stop at arrived location), log their start and stop points,

view driven total distance[1]. Event will be **generated (included into send records) only** when trip starts and finishes.

Note: Scenarios and Trip features are activated (DOUTs are activated) only if configured Ignition Source=1 (ignition is on).

5.4.3 Geofencing

Geofencing is another feature which is highly customizable and can detect wherever car enters or leaves customized areas. More about Geofencing can be read in 5.13.3 chapter.

Auto Geofencing feature if enabled is activated automatically by turning off car ignition (configured Ignition Source). Next time before driving user has to disable Auto Geofencing with iButton or by turning on ignition. In case of theft car leaves Auto Geofencing zone without authorization FMA2YX device automatically sends high priority record to AVL application.

5.4.4 iButton list

iButton list is used to enter authorized iButton ID codes, which are used to authenticate driver in Immobilizer scenario, Auto Geofencing options and DOUT deactivation in Jamming scenario.

5.5 Configurator

New FMA2YX module has default factory settings. Settings should be changed according to your application and your GSM operator information.

Contact sales manager to get the latest FMA2YX Configurator version. FMA2YX configurator operates on Microsoft Windows OS and uses MS .Net Framework 3.5 or higher. Please ensure that MS .Net Framework 3.5 or later is installed on your PC before starting configurator. Latest MS .Net Framework version can be downloaded from official Microsoft web page.

Module configuration is performed over USB cable. Configuration process starts from starting FMA2YX Configurator program and then connecting to FMA2YX device via Connect button located on the top left corner of configurator. If connected successfully, IMEI Version fields which were empty, now are filled with certain numbers depending on Modem IMEI and firmware version of your device (figure below).

FMA2YX has one user editable profile, which can be loaded from device, and saved. User can also revert to default settings, by pressing Load Defaults button. After any modification of configuration settings it has to be saved to FMA2YX device, otherwise it will not be written to device.

FMA2YX has 2 configuration modes: Recommended Configuration (Figure 20) and Advanced Configuration (Figure 21).

[1] Continuous Trip distance is counted only for ONE trip. If trip is finished (stop point is detected), trip distance resets to 0 (zero). Next trip will start counting from the begining.

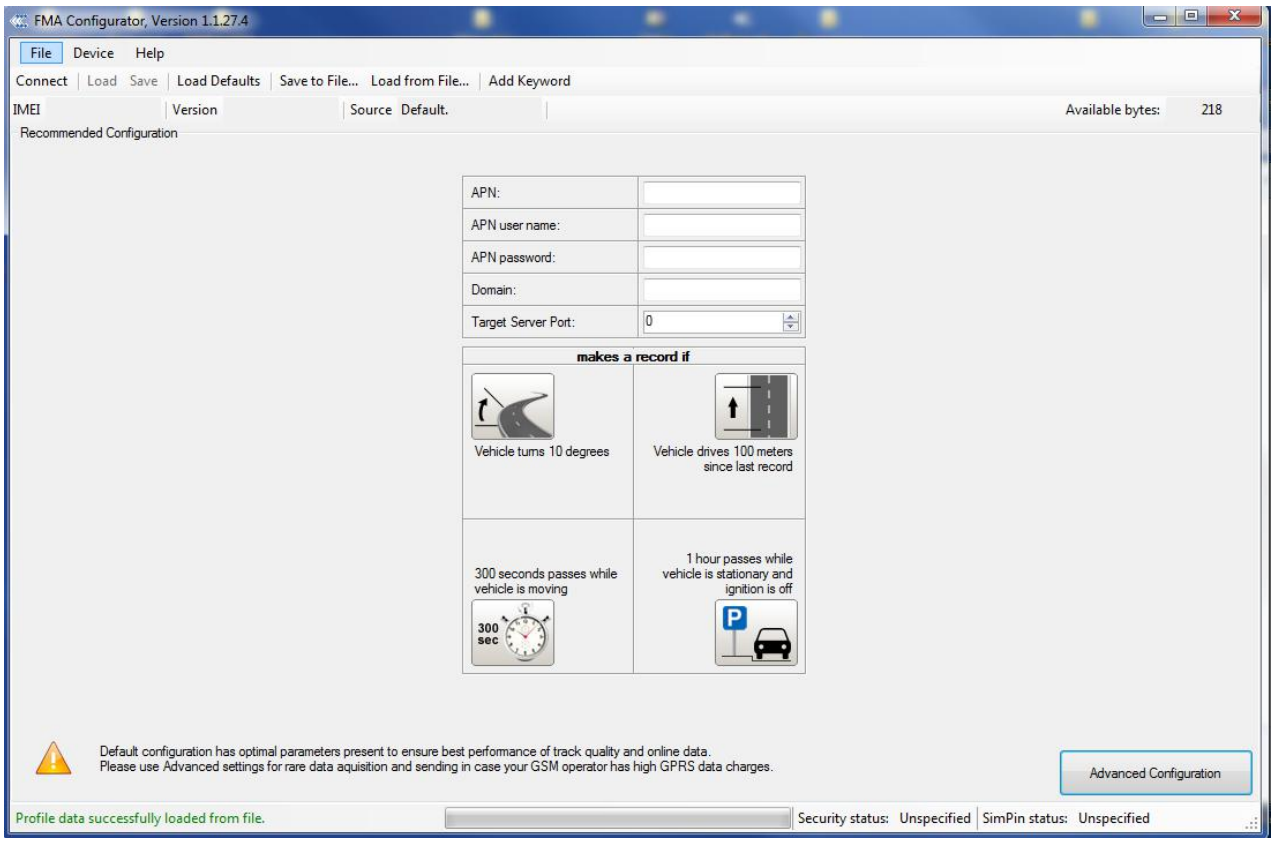

Figure 20. Recommended Configuration window

Recommended Configuration mode uses predefined data acquisition values. In this configuration mode it is only required to enter network parameters. In Advanced Configuration mode FMA2YX is more configurable.

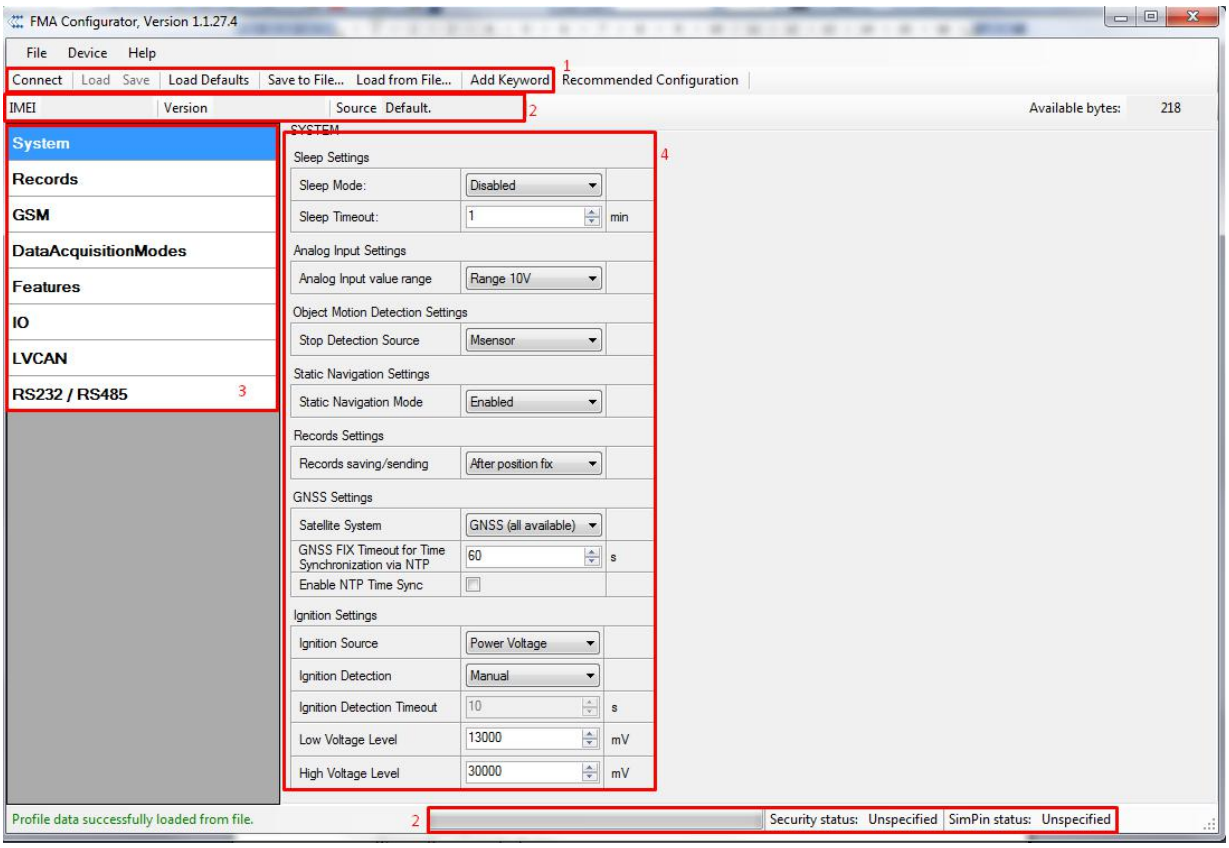

Figure 21. Advanced Configuration window

FMA2YX Configurator is divided into 4 main areas: 1 – main button area, 2 – information area, 3 –settings menu, 4 – parameters and values menu.

Main Buttons description:

"Connect" – connects device.
"Load" – reads configuration parameters from FMA2YX Flash memory.
"Save" – saves configuration parameters to FMA2YX Flash memory.
"Load Defaults" – loads default FMA2YX settings that later can be modified. This procedure must be performed before entering new parameters.
"Save to File…" – allows user to save currently entered settings to .XML file, for later usage.
"Load from File…" – allows user to load configuration saved in .XML extension file.
"Reset device" – reboots FMA2YX and displays processor firmware version.

Additional Buttons description:

"SIM PIN" - allows to enter PIN code if inserted SIM card has activated PIN code security. Note that PIN code can be entered 2 times.

"Add Keyword/Change Keyword/Remove Keyword"– buttons are used to protect configurator from unauthorized access to configuration.

Keyword is 4 – 10 symbol length. If keyword is set, every time user reconnects FMA2YX to USB port, user will be asked to provide valid keyword when connecting FMA2YX to configurator. User is given 5 attempts to enter keyword. After entering valid keyword, counter resets to 5.

If user disconnects FMA2YX using "Disconnect" button and does not disconnect from USB port, after reconnecting using "Connect" button, configurator does not ask for keyword.

ATTENTION! If you have entered a keyword, disconnected from the configurator and then later connected again, you will need to enter the keyword that you have entered previously. If you have forgotten it, please contact your local sales manager.

5.6 Record storage

FMA2YX can store up to 3500 data records if GSM or GPRS is not available at the moment. It will send data later when GPRS is available again. Note that FMA2YX can have memory full of records. In such case it will start deleting oldest records in order to save new ones. Sending all the data records to server may take some time. Sending 3500 records for FMA2YX may take for about 2 hours (exact time may differ depending on GPRS/server load).

You can access all uploaded data from TAVL4 application.

More details on how to use TAVL application please refer to "TAVL4 application user manual" documentation.

5.7 System settings

System settings have 7 configurable parameters:

- Sleep settings - user can turn deep sleep or GPS sleep;
- Analog Input Settings - user can choose analog input range 10 V or 30 V, depending on needed accuracy (lower range gives higher accuracy of measurements), and input voltage;
- Object Motion Detection Settings - user can configure 3 ways how FMA2YX will detect stopped movement, and change its working mode (for working modes, read section 5.13);
- Static navigation settings - where user can turn static navigation on or off;
- Record settings - user can choose one out of three options to change record saving/sending condition: after position fix, always and after time sync.;
- GNSS Settings - user can choose satellite system and time synchronization via NTP (Network Time Protocol).
- Ignition Settings:
  Ignition Source - sets ignition triggered functionalities to be triggered by:
  - Power Voltage (if voltage is between High Voltage Level and Low Voltage Level the ignition is considered to be turned on);
  - Digital Input (DIN1 ON – ignition on, DIN1 OFF – ignition off);
  - Movement (if accelerometer/movement sensor detects movement then ignition is on, if movement stops – ignition is off).

  Ignition Detection:
  - Manual – user manually selects Power Voltage range;
  - Automatic – automatically detect Power Voltage change.

Table 10. Object Motion Detection settings description.

Stop Detection Source	Vehicle on Stop mode	Vehicle Moving mode
Ignition (recommended)	If ignition (DIN1) is logic low	If ignition (DIN1) is logic high

Msensor (movement sensor)	Internal movement sensor does not detect movement	Internal movement sensor detects movement
GPS	GPS fix is available and vehicle speed is lower than 5 km/h	GPS fix is available and vehicle speed is higher than 5 km/h
	While GPS fix is unavailable, Object Motion Detection Settings are working like in Msensor mode	

Static Navigation Mode is a filter, which filters out track jumps when the object is stationary. If Static navigation filter is disabled, it will apply no changes on GPS data. If Static navigation filter is enabled, it will filter changes in GPS position if no movement is detected (depends on Object Motion Detection Settings). It allows filtering GPS jumps when object is parked (is not moving) and GPS position is still traced.

Automatic Ignition detection:

When device starts, it determines voltage system it is plugged in. It should be done by checking external power voltage – if voltage is higher than 20 V, it's a 24 V system. Otherwise, if voltage is lower than 20 V, it's a 12 V system;

For 24 V systems, voltage threshold for ignition detection should be 27 V (if voltage is <27 V, then ignition is off, else if voltage is >27 V – ignition is on); for 12 V systems, threshold should be 13.2 V (<13.2 V – ignition off; >13.2 V – ignition on).

If ignition was determined as ON and voltage dropped below the stated threshold, then device starts counting a configured timeout. Only after timeout runs out ignition is determined to be at OFF state. If power voltage goes back to high level before timeout runs out, ignition state should not change.

5.8 Records settings

Here user can modify if FMA2YX device will send newest records first, meaning, that the most important thing is to know recent position of car, older records are being sent right after newest records arrive to AVL application.

Activate Data Link Timeout is used to set timeout of link between FMA2YX and AVL application termination. If FMA2YX has already sent all records it waits for new records before closing link. If new records are generated in the period of this timeout, and minimum count to send is reached, they are sent to AVL application. This option is useful when GSM operator charge for link activation.

Server Response Timeout is used to set time period waiting for response from server side.

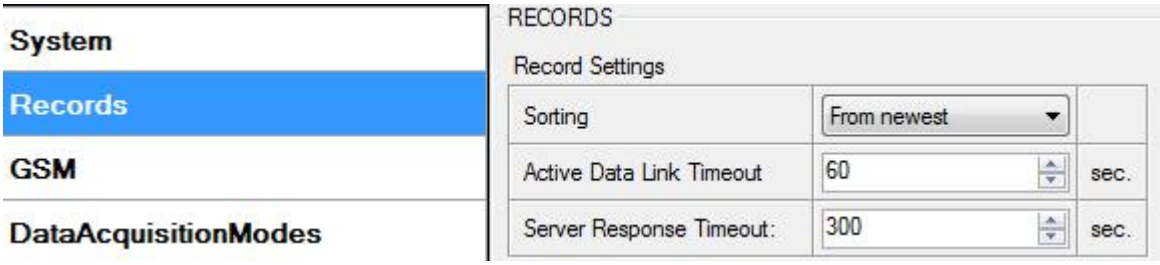

Figure 18. Records settings configuration

5.9 GSM settings, GPRS part

"**GPRS**" defines main parameters for FMA2YX: GSM operator APN and GPRS username and password (optional – depending on operator), destination server IP and port, and allows to set protocol used for data transfers – TCP or UDP.

Some operators use specific authentication for GPRS session – CHAP or PAP. If any of these is used, APN should be entered as "chap:<APN>" or "pap:<APN>". I.e. if operator is using APN "internet" with CHAP authentication, it should be entered as "chap:internet". Information about APN and authentication type should be provided by your GSM operator.

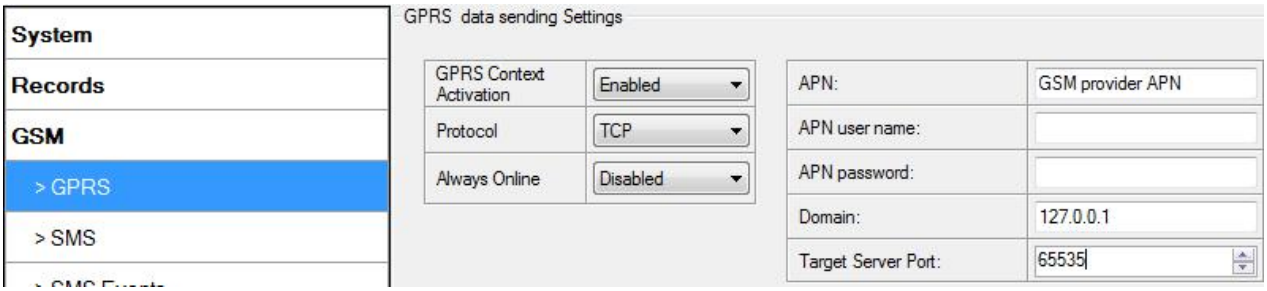

Figure 22. GPRS configuration

5.10 GSM settings, SMS part

Essential fields in "SMS" part are "Login" and "Password". The login and password are used with every SMS sent to FMA2YX. If login and password are not set, in every SMS sent to FMA2YX device two spaces before command have to be used (<space><space><command>).

Command structure with set login and password:

<login><space><password><space><command>, example: "asd 123 getgps"

Phone numbers have to be written in international standard, without using "+" or "00" signs in prefix. If no numbers are entered, configuration and sending commands over SMS are allowed from all GSM numbers.

SMS data sending settings – enable or disable **periodic** data and event SMS usage. This setting does not affect replies to SMS request messages – answers are always sent back to sender telephone number.

FMA2YX can send binary SMS with 24-coordinates-in-one-SMS. It is used in areas where no GPRS coverage is available. Module collects data and sends to server binary SMS containing information about last 24 collected points. SMS sending schedule is set in SMS Week Time tab. 24-Coordinates SMS decoding is described in device protocols documentation. Please contact Teltonika sale manager to find out more about protocols documentation purchase.

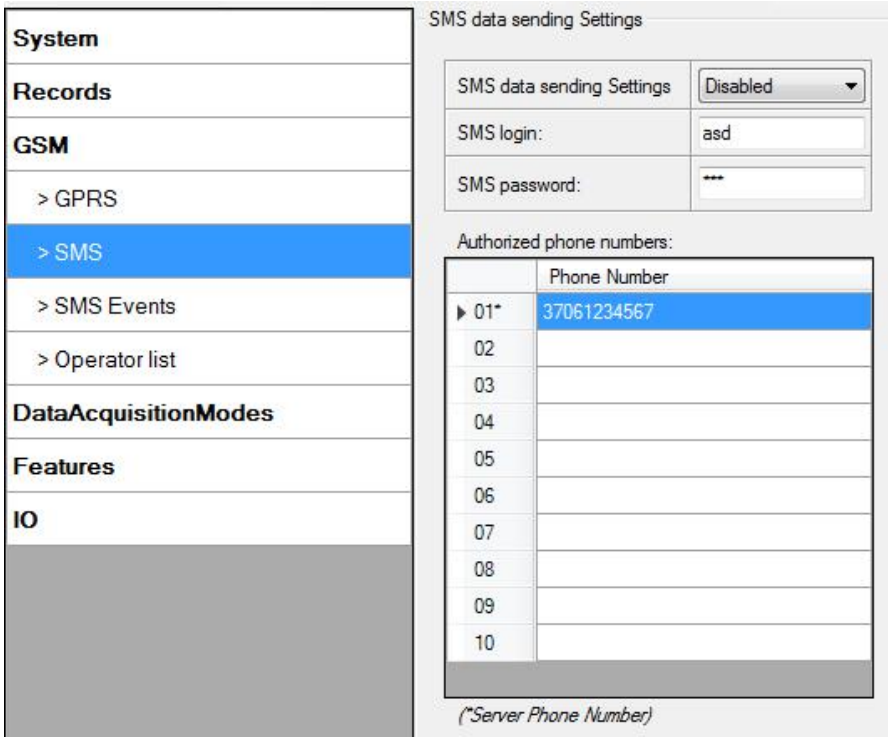

Figure 23. SMS configuration

Note: A mobile phone will not understand and SMS with binary code, so sending it to a mobile phone is useless. When sending a binary SMS to a phone number, which is a server phone number, the server can interpret and understand binary code, so the data can be read and you can view it on the server.

SMS login and password and authorized number list are used to protect FMA2YX module from unauthorized access. Module accepts messages only from a list of authorized numbers and with proper module login and password. Numbers must be without “+” or “00” prefix. If no authorized numbers are entered, module accepts messages from all numbers.

5.11 GSM settings, Operator list

Operators list – FMA2YX can work in different modes (use different settings) according to the operator list defined. Operator list is used for Data Acquisition Mode switching (see chapter 5.12 Data Acquisition Mode settings for more details). Modes are changed based on GSM operator FMA2YX is connected to.

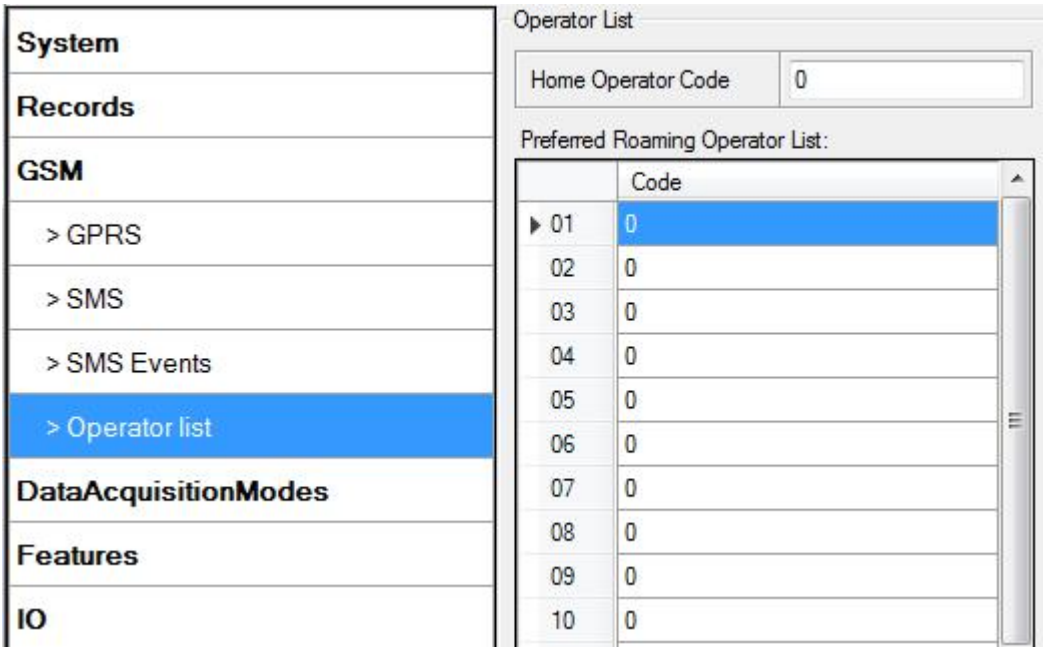

Figure 24. Operator list configuration

If operator list is left empty, it will allow using GPRS to any GSM operator. Please note that FMA2YX will work in **Unknown mode only** (make sure it is configured to allow data sending – GPRS context is enabled).

Operator Blacklist. Operator BlackList Functionality algorithm: Device tries to connect to an operator with the strongest signal. It will prioritize operators which are specified in the operator list. If no operators from the operator list are available, the device will try connect to an operator from the blacklist. If the device connects to an operator from the blacklist, it will not be allowed connect to the internet or send SMS messages. If no suitable operator is found on both lists, the device will try to connect to a remaining available operator with the strongest signal. The brief functionality is shown in diagram on the next page:

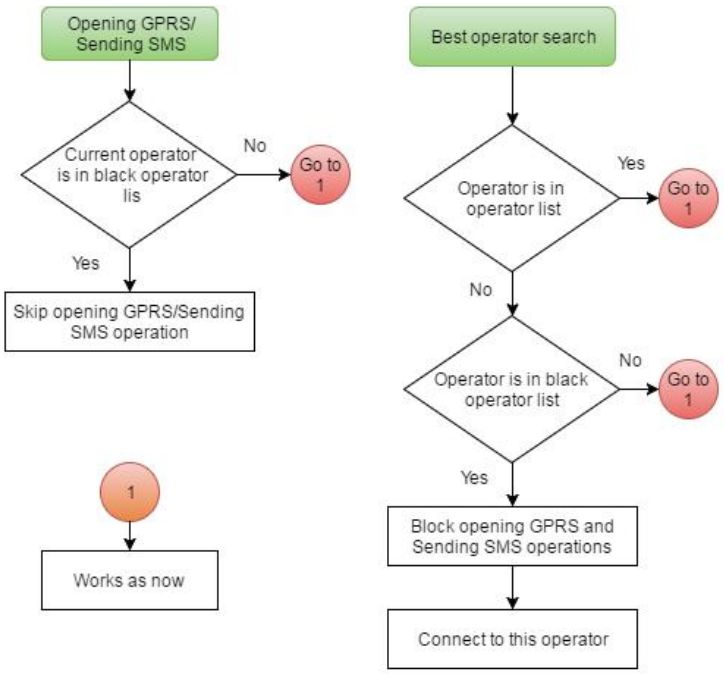

Figure 25. Black operator list functionality

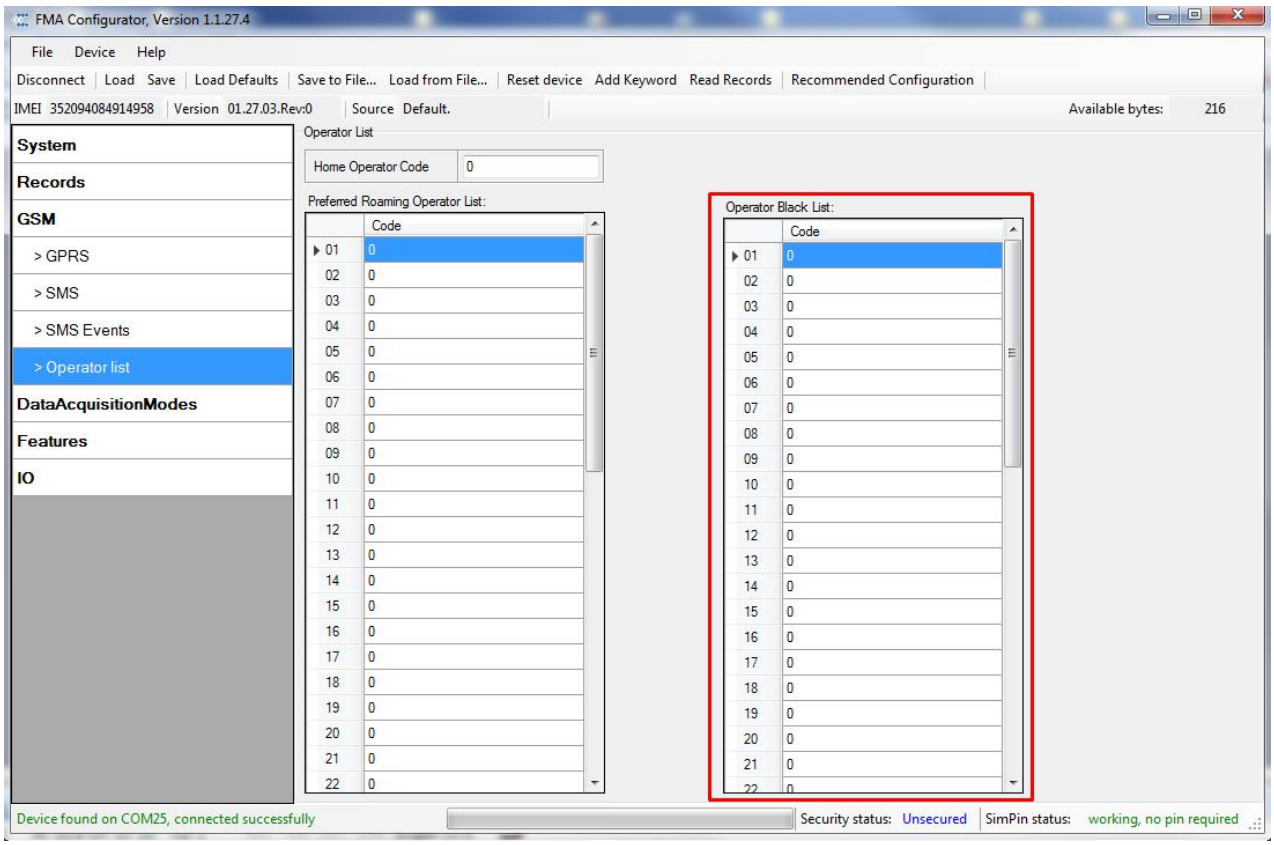

Figure 26. Black operator list configuration

5.12 Data Acquisition Mode settings

Data Acquisition Modes are an essential part of FMA2YX device, it is also highly configurable.

By configuration user defines how records will be saved and sent. There are three different modes: Home, Roaming and Unknown. All these modes with configured data acquisition and send frequencies depend on current GSM Operator defined in Operator list (see section 5.11) and are switched when GSM operator changes (e.g. vehicle passes through country boarder).

If current GSM operator is defined as Home Operator, device will work in Home Data Acquisition mode, if current operator is defined as Roaming Operator, device will work in Roaming Data Acquisition mode, and if current operator code is not written in Operator list (but there is at least one operator code in the operator list), device will work in Unknown Acquisition mode.

This functionality allows having different AVL records acquire and send parameters values when object is moving or stands still. Vehicle moving or stop state is defined by Stop Detection Source parameter.

FMA2YX allows having 6 different modes. Operational logic is shown in Figure 27.

If there are no operator codes entered into operator list, FMA2YX will work in Unknown network mode ONLY.

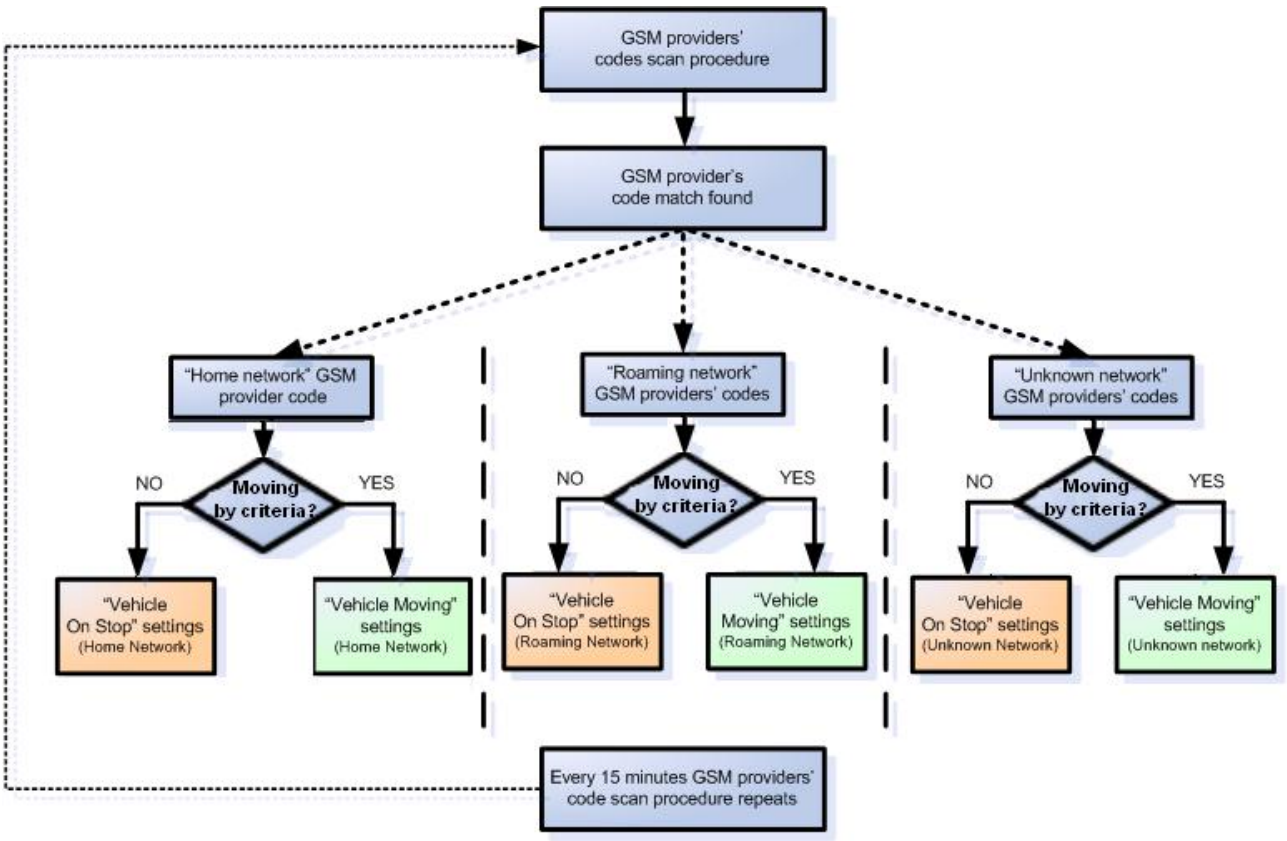

Figure 27. Data Acquisition Mode configuration

Operator search is performed every 15 minutes. Depending on current GSM operator, Home, Roaming or Unknown mode can be changed faster than every 15 minutes. This process is separate from operator search. Movement criteria are checked every second.

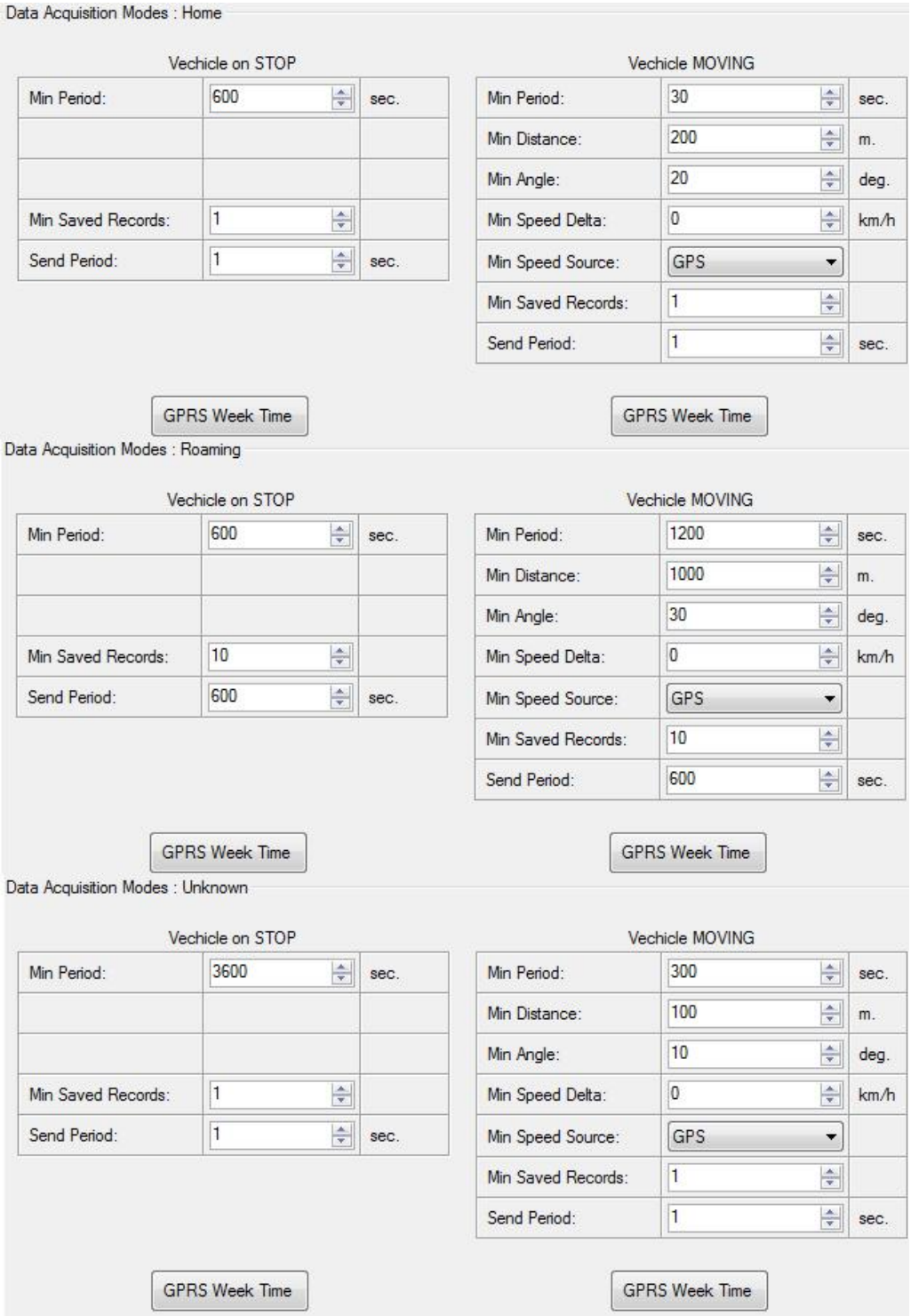

Figure 28. Data Acquisition Mode configuration

Min Saved Records defines minimum number of coordinates and I/O data that should be transferred with one connection to server. If FMA2YX does not have enough coordinates to send to server, it will check again after time interval defined in Sending Period.

Send period – GPRS data sending to server period. Module makes attempts to send collected data to server every defined period. If it does not have enough records (depends on parameter Min. Saved Records described above), it tries again after defined time interval.

GPRS Week Time tab – most GSM billing systems charge number of bytes (kilobytes) transmitted per session. During the session, FMA2YX makes connection and transmits data to a server. FMA2YX tries to handle the session as much as possible. It never closes session by itself.

Session can last for hours, days, weeks or session can be closed after every connection in certain GSM networks – this depends on GSM network provider. GPRS Context Week Time defines session re-establish schedule if session was closed by network. New GPRS context is opened if time is 10 minutes till time checked in table. Therefore if all boxes are checked, FMA2YX is able to open new connection anytime. At scheduled time match FMA2YX checks for GPRS session activity. If GPRS session is alive, FMA2YX sends data to server according to Send period parameter. If it is not, FMA2YX checks if it is able to re-establish the session.

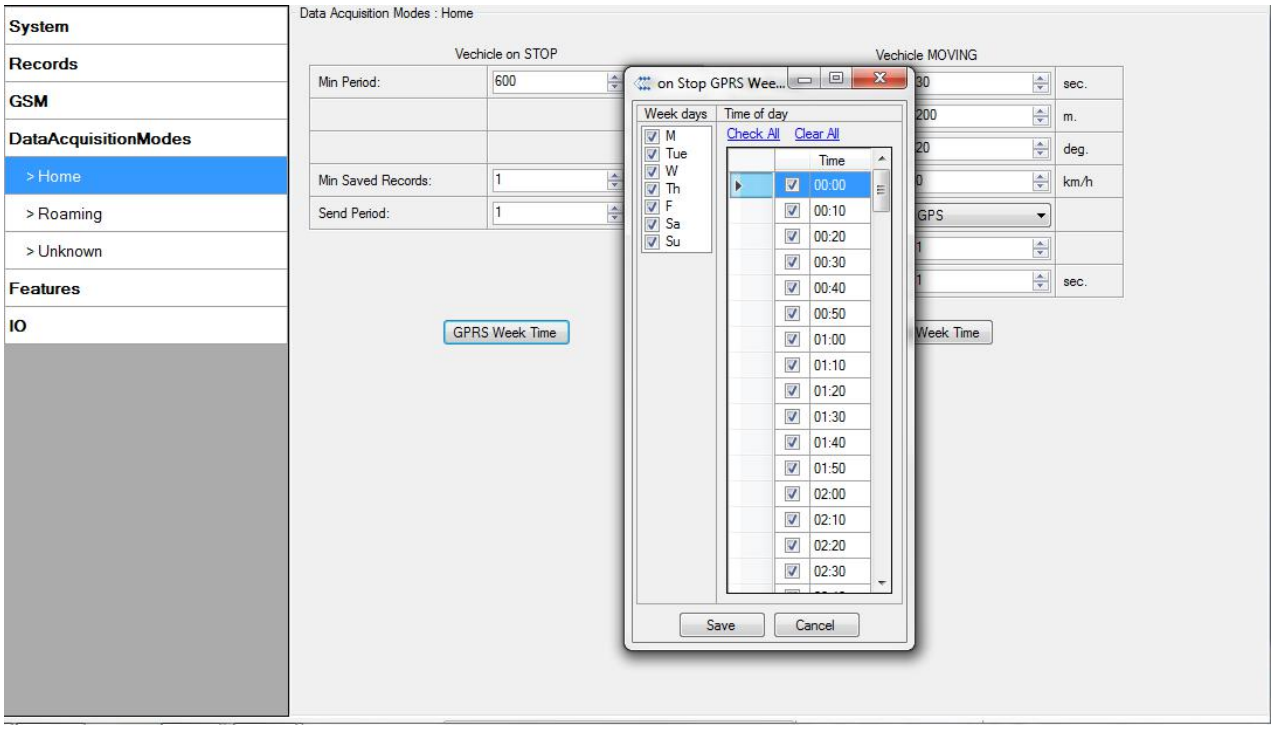

Figure 29. GPRS Week Time configuration

Device checks if the time between last saved record and current time is equal or higher than Time based acquire interval. If so, FMA2YX saves record to memory. If not, FMA2YX checks if the distance from last record to current record is equal or higher than Distance based acquire interval. If so, saves the record to memory. If not and speed is higher than 10km/h, then FMA2YX checks if angle difference between last record and current record is equal or higher than Angle based acquire value. If so, saves the record to memory. These checks are performed every second.

Note: Keep in mind that FMA2YX operates in **GMT:0** time zone, without daylight saving.

FMA2YX is able to collect records using three methods at the same time: time, distance and angle based data acquisition:

Time based data acquiring (Min. period) – records are being acquired every time when defined interval of time passes. Entering zero disables data acquisition depending on time.

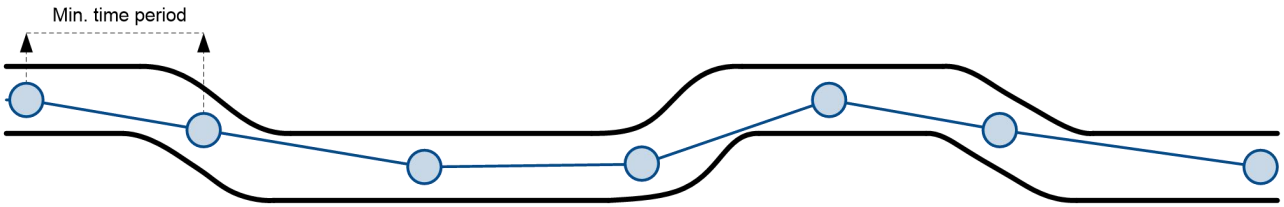

Figure 30. Time based data acquiring example

Distance based data acquiring (Min. distance) – records are being acquired when the distance between previous coordinate and current position is greater than defined parameter value. Entering zero disables data acquisition depending on distance.

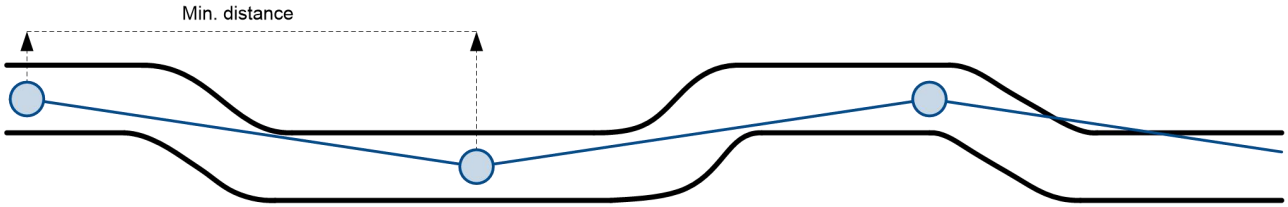

Figure 31. Distance based data acquiring example

Angle based data acquiring (Min. angle) – records are being acquired when angle difference between last recorded coordinate and current position is greater than defined value. Entering zero disables data acquisition depending on angle.

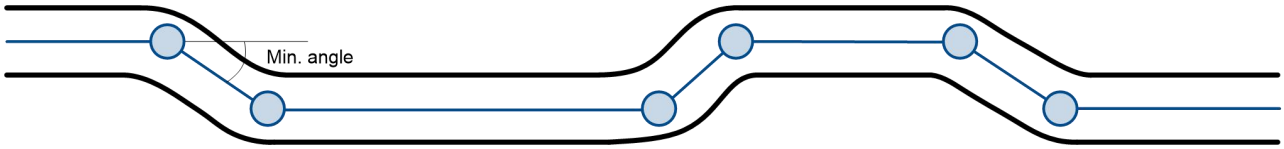

Figure 32. Angle based data acquiring example

Speed based data acquiring (Min. speed delta) – records are being acquired when speed difference between last recorded coordinate and current position is greater than defined value. Entering zero disables data acquisition depending on speed.

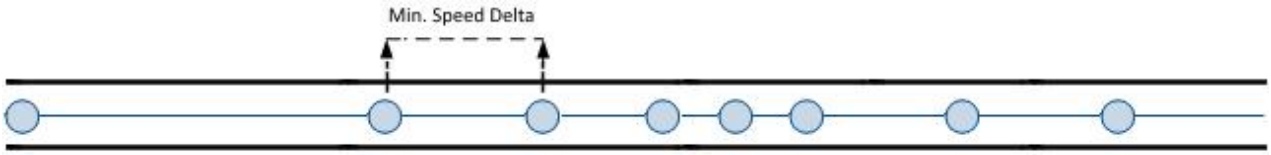

Figure 33. Speed based data acquiring example

5.13 Features settings

For more information about available Scenarios, Trip, Geofencing and iButton list, refer to 5.4 chapter.

5.13.1 Scenarios settings

In Scenarios window you can find iButton detection feature and four different scenarios. You can assign one scenario or detection feature for each Digital Output (DOUT). If scenario changes it's state to active, event will be generated and DOUT state will be changed aswell.

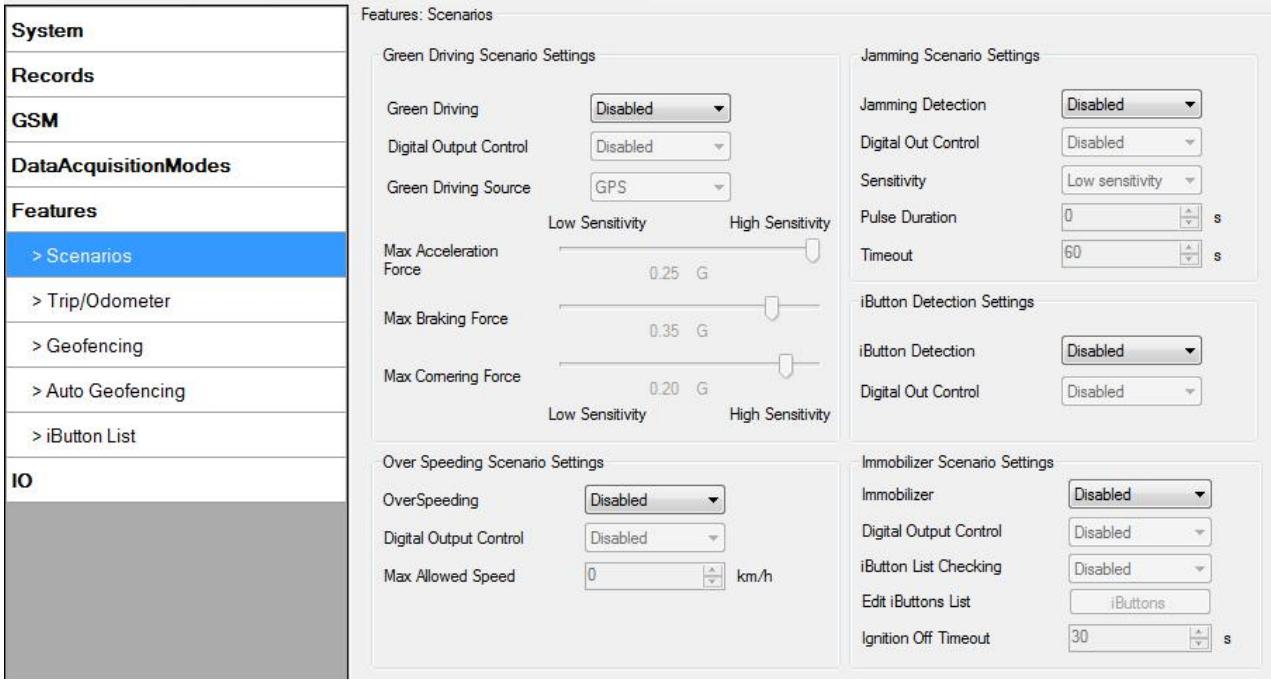

Figure 34. Scenarios configuration

Digital Output (open drain grade) usage in scenarios:

- Green Driving

  DOUT1/DOUT2 (optional) is ON for:
  - 3sec. if detected value is over (0; 30] % from preconfigured allowed value
  - 5sec. if detected value is over (30; 50] % from preconfigured allowed value
  - 7sec. if detected value is over (50; -] % from preconfigured allowed value

  After period of time DOUT1/DOUT2 is turned OFF.

- Over Speeding

  If DOUT Control is disabled, scenario only generates events without digital output activation. If DOUT Control is enabled, then while vehicle speed exceeds the parameter value, DOUT1/DOUT2 (optional) state is 1 or ON. DOUT1/DOUT2 remains active until current speed decreases below the parameter value.

- Jamming Detection

  When this scenario is enabled and device modem is being jammed, then a low priority event is generated. Jamming functionality allows to set Jamming Sensitivity to Low, Medium or High. Jamming Timeout, Jamming DOUT control and Jamming Pulse Duration can be configured. If Jamming Pulse Duration is > 0, then jamming is activated (digital output will be activated for this time period and will be deactivated after time expires). If jamming ends before this timeout occurs, then digital output will be deactivated and timeout countdown will reset. Jamming can be deactivated with iButton. When jamming event is detected and DOUT is activated it can be

deactivated with iButton. If iButton list is not empty, then digital output can be deactivated only with authorized iButton.

- Immobilizer

If DOUT Control is disabled, scenario will only generate events without digital output activation. If DOUT Control is enabled DOUT1/DOUT2 (optional) turns ON if Ignition turns ON (configured Ignition Source =1). After iButton ID is read (any iButton is attached), DOUT1/DOUT2 turns OFF. After iButton identification, Ignition (configured Ignition Source) can be turned OFF (configured Ignition Source =0) for no longer than 30 seconds, otherwise immobilizer must be repeated. If iButton list checking parameter is enabled, authorization will be successful only if attached iButton is specified in the iButton list.

- iButton detection

If iButton is read, scenario activates configured DOUT for 500 ms. Second activation will be available only when iButton I/O element value goes back to 0, or another iButton is read.

5.13.2 Trip settings

Trip window offers user to configure Trip feature. If Trip is enabled following parameters are configurable:

- Start Speed – GPS speed has to be greater than the specified Start Speed in order to detect Trip Start.
- Ignition Off Timeout – timeout to wait if ignition (configured Ignition Source) was off, to detect Trip stop.
- Continuous distance counting – *Not* or *Continuous* can be chosen. For this feature I/O Trip distance must be enabled.

If I/O *Trip distance* is enabled and Continuous distance counting variable is set to Continuous, **Trip distance** is going to be counted continuously (**from Trip start to Trip stop**). This value is written to I/O *Trip distance* value field. When Trip is over and next Trip begins, *Trip distance* is reset to zero. When the next trip starts counting continuously starts from the beginning again.

If I/O Trip distance is enabled and Continuous Distance Counting variable is set “Not”, then the distance is going to be counted only between every record made. This value is written to I/O Trip distance value field and reset to zero every new record until Trip stops. If later all Trip distance are summed up manually, the user gets the distance driven during the whole period of the Trip.

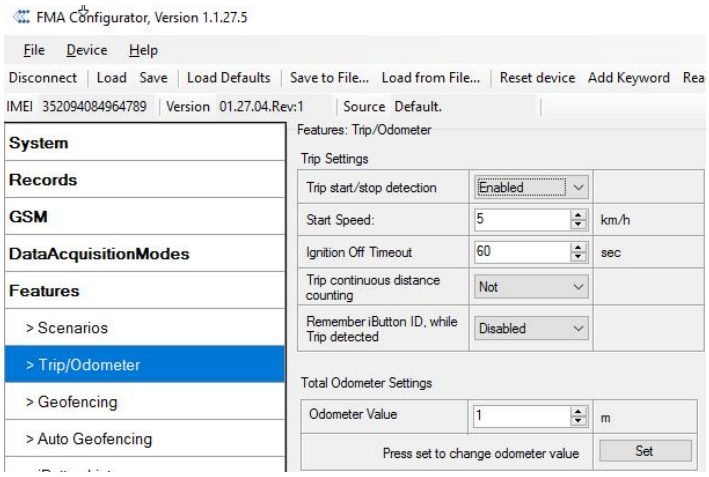

Figure 35. Trip configuration

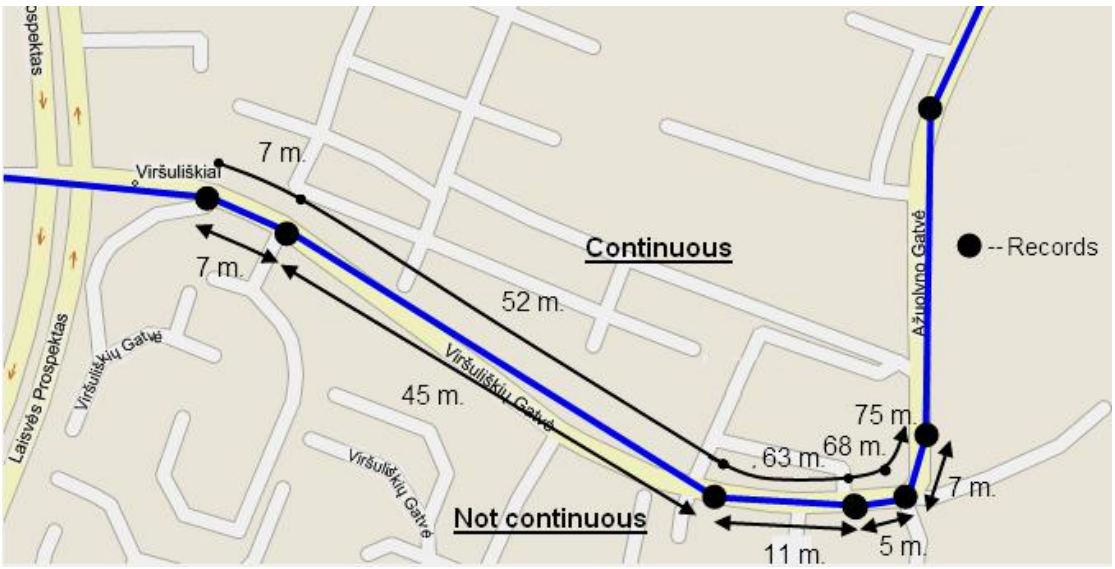

Figure 36. Trip continuous distance counting parameter example

Continuous odometer calculates the distance if *Total Distance* I/O element is enabled. Odometer Value is constantly saved to flash memory every 30 seconds, but counted every second. After power is turned off, odometer value saved in flash does not reset. *Start odometer* value with can be set using configurator (*„set“* button) or SMS/GPRS (setparam/getparam) commands. This parameter can not be configured via TCP config. If this value is not set, FMA2YX starts counting from 0. Continuous odometer works irrespective of the Trip functionality.

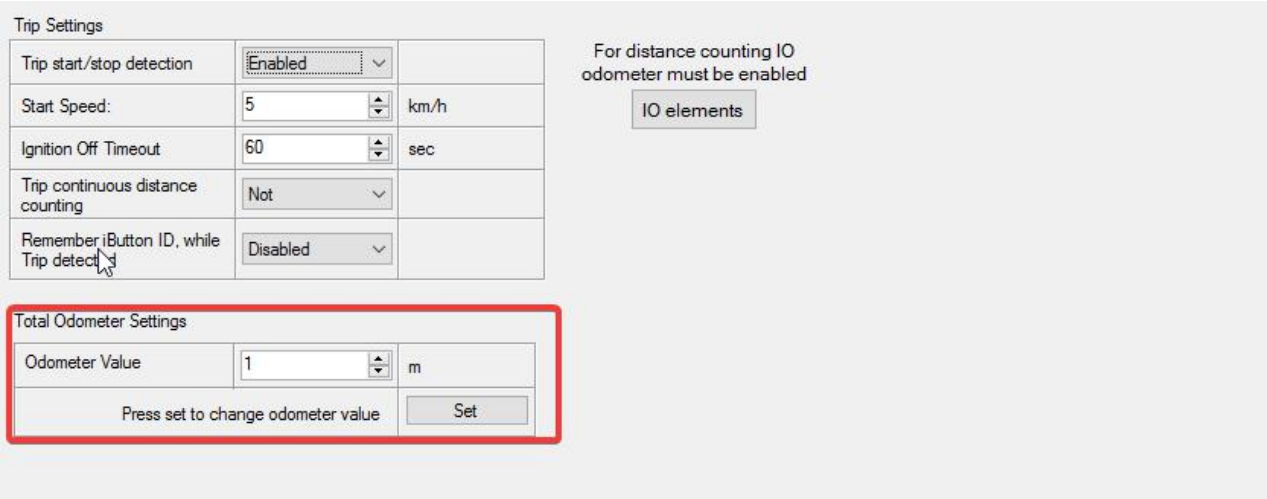

Figure 37. Continuous odometer setting in configurator.

Remember iButton functionality. If Remember iButton ID while trip detected and Trip parameters are enabled, ignition is on and iButton is attached, then FMA2YX remembers iButton ID. iButton ID is saved and sent to server with every record. If new iButton is attached during the trip, FMA2YX remembers new iButton ID. FMA2YX forgets iButton ID after ignition is off and trip ignition off timeout is reached.

Features: Trip/Odometer

Trip Settings

Trip start/stop detection	Enabled	
Start Speed:	5	km/h
Ignition Off Timeout	60	sec
Trip continuous distance counting	Not	
Remember iButton ID, while Trip detected	Disabled	

Figure 38. *Remember iButton* parameter in configurator

5.13.3 Geofencing settings

FMA2YX has 5 configurable Geofence zones and it can generate an event when defined Geofence zone border is crossed.

Frame border – frame border is an additional border around Geofence zone. It is additional area around defined zone used to prevent false event recording when object stops on the border of the area and because of GPS errors some records are made inside area and some – outside. Event is generated only when both borders are crossed. See figure 39 for details: track 1 is considered to have entered the area while track 2 is not.

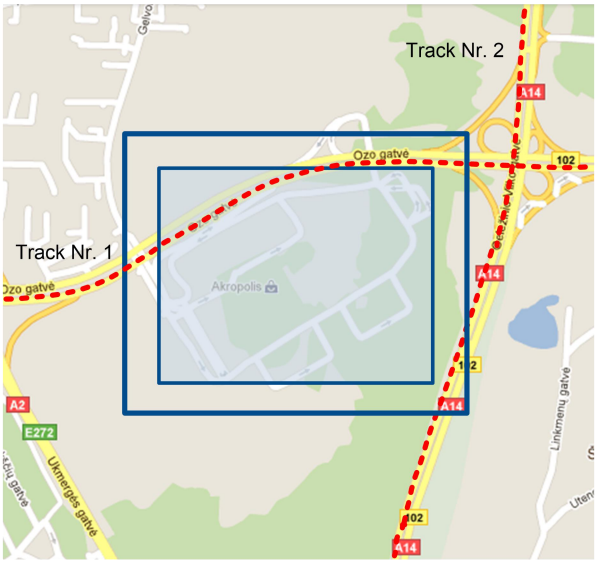

Figure 39. Geofence border

Shape – can be rectangle or circle

Priority – priority of Geofence event: low, high or panic. These levels define priority of event information sending to server. See I/O element description for more details about priorities.

Generate event (On entrance, On exit, On Both) – choose when record will be generated;

X1 – geofence zone left bottom corner X coordinate (longitude);

Y1 – geofence zone left bottom corner Y coordinate (latitude);

X2 or R – geofence zone upper right corner X coordinate (longitude) or radius of circle when Circular zone is used (radius in meters);

Y2 – geofence zone upper right corner Y coordinate (latitude);

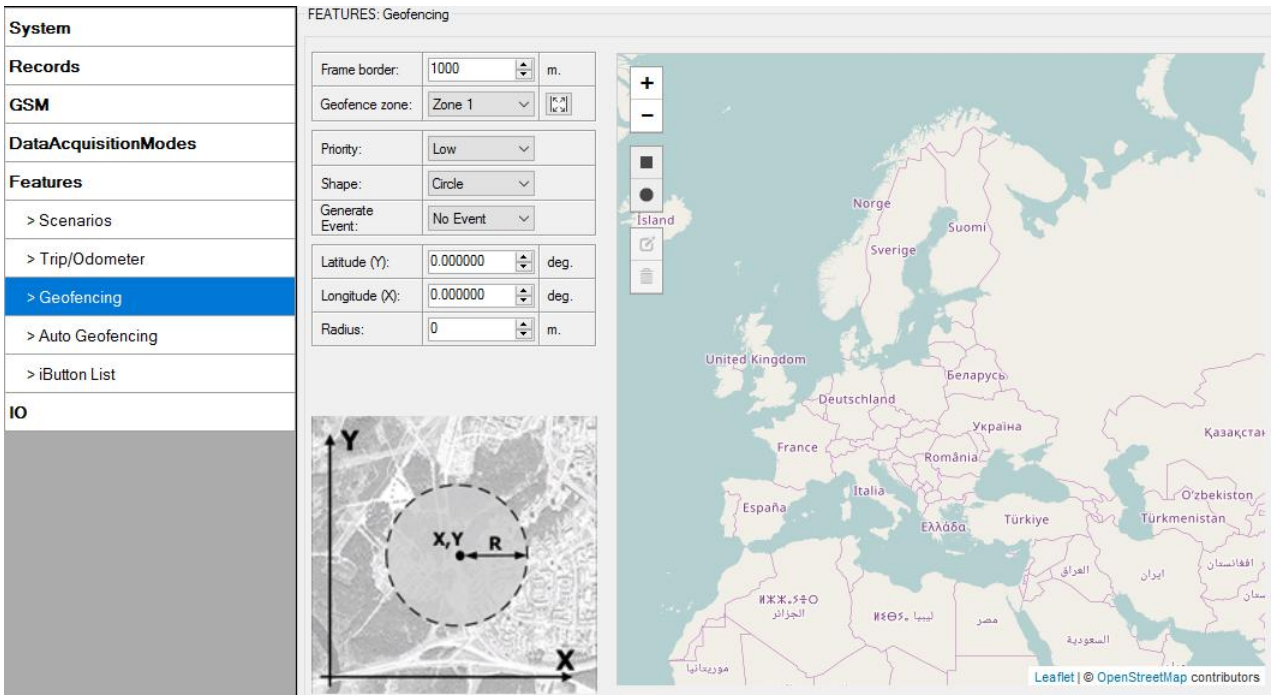

Figure 40. Geofence configuration

AutoGeofencing settings

AutoGeofence – the last known position after movement = off. If your car's being taken away – you can be notified. The shape and size of the geofence zones are parameters. It is possibility to state whether entering in or out of the geofence triggers an asynchronous message.

AutoGeofencing option can be configured by following parameters visible in figure 41 below.

Activate – Enable or Disable AutoGeofence functionality.

Activation TMO – Time period before Geofence is activated after vehicle stops.

Deactivate By:

- Ignition – If ignition becomes high it will disable AutoGeofenze Zone.
- iButton – if iButton is attached it will disable AutoGeofence Zone.

Edit iButton List – if list is not empty, attached iButton is tested against an iButton list, if match is found AutoGeofence zone is disabled.

Priority – Priority of generated event, which will be applied to saved record.

Enter Event – Event generation on Geofence entrance.

Exit Event – Event generation on Geofence exit.

On Both - Event generation on Geofence entrance Or exit

Note that AutoGeofencing does not require entering coordinates, instead it requires GPS visibility. If vehicle stopped and activation timeout has passed, an AutoGeofence will be created around vehicle's last position with set Radius value. AutoGeofence event generation works the same as Geofencing mentioned above.

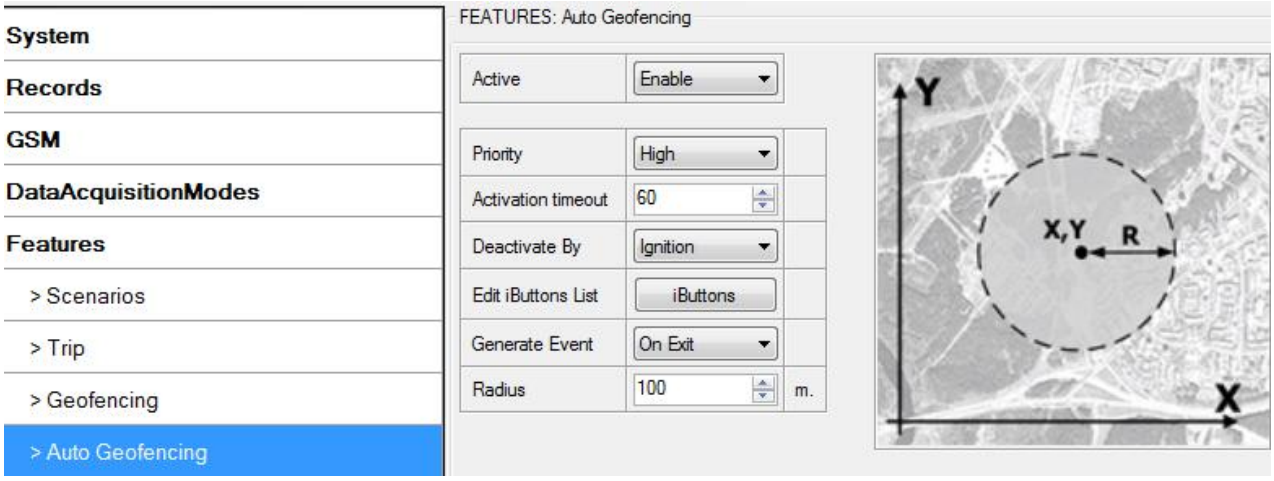

Figure 41. Geofence configuration

Note: FMA2YX operates GMT:0 time without daylight saving.

5.13.4 SMS events

SMS events functionality allows FMA2YX to send a configured SMS when an event is triggered. This event can be triggered by:

- Green Driving
- OverSpeeding
- Immobilizer
- Trip start/stop
- Geofence
- AutoGeofence
- I/O event

When any of the above events is triggered, FMA2YX sends a configured SMS message to a defined phone number. If SMS events is activated, but there are no numbers defined in SMS events PreDefined Numbers list (figure 42), then the device will not send any messages.

SMS events can be activated in FMA2YX configurator GSM→ SMS -> SMS events (figure 42).

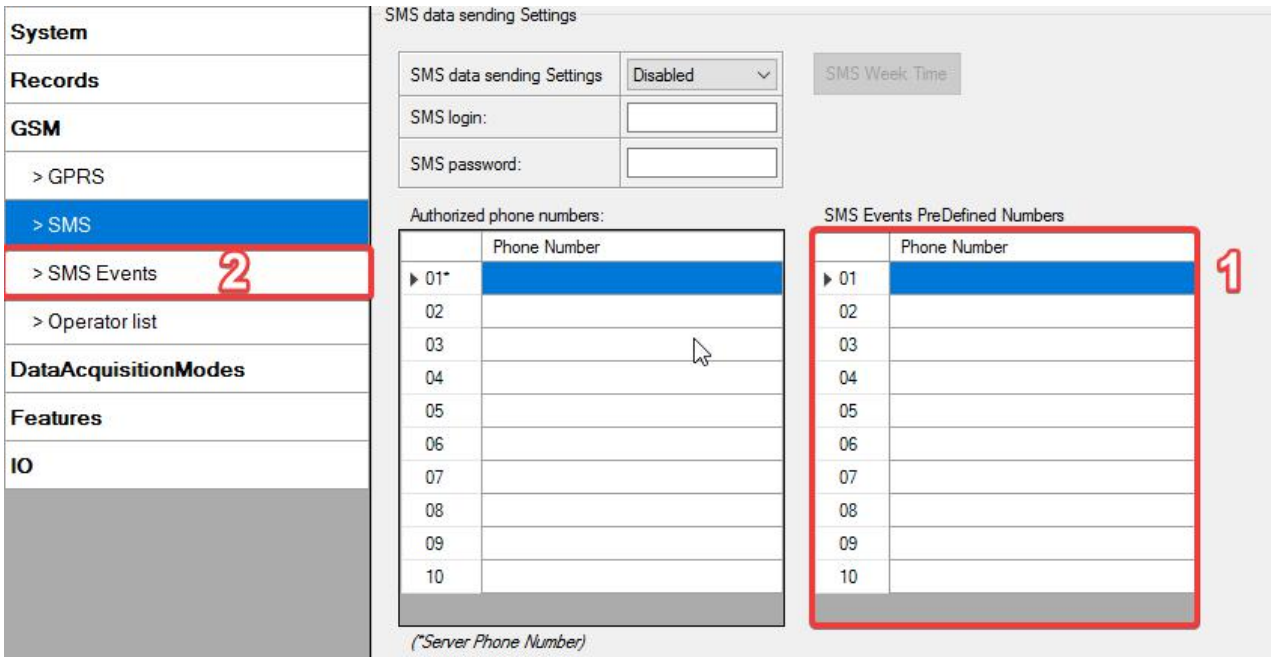

Figure 42. SMS Events PreDefined Numbers list

The sent SMS messages format is according to:

"Date Time EventText"

For example, if FMA2YX is configured to send an SMS, when Digital Input 1 reaches High level, with priority High and generating event on both(figure 43), then the sent SMS should look like this:

"2012/6/7 12:00:00 Digital Input 1"

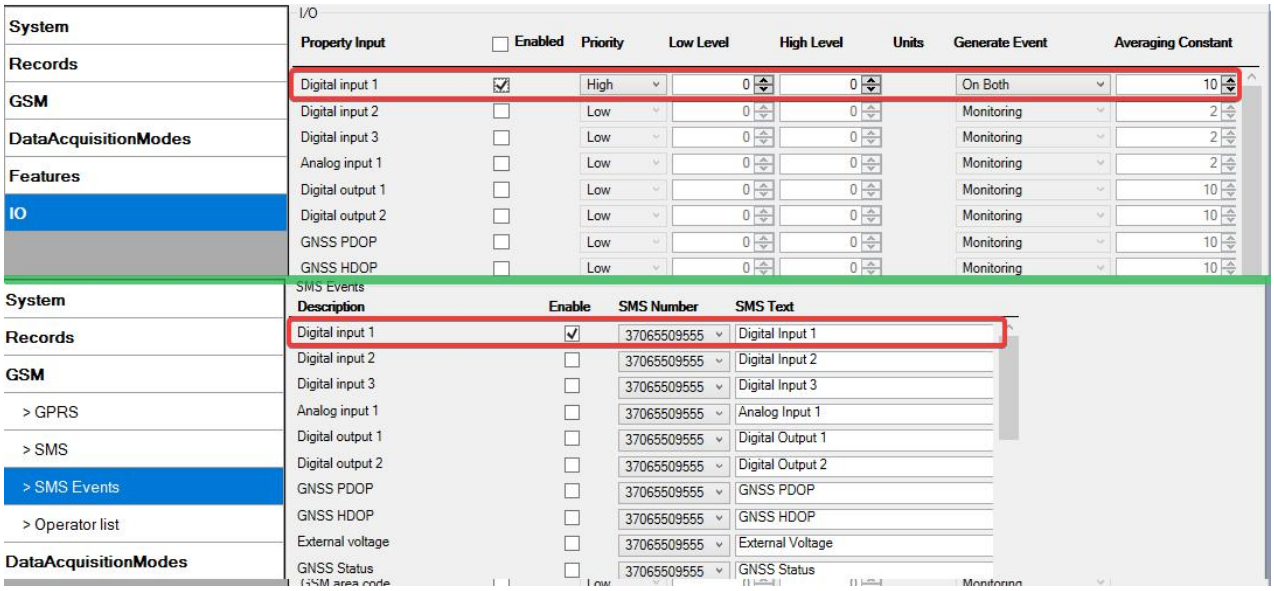

Figure 43. Configured Digital Input 1 SMS event

The SMS Text field can be altered and any text can be entered. Maximum message length is 90 symbols (numbers, letters and symbols in ASCII, except for comma ",").

ATTENTION!
If FMA2YX is in Deep Sleep mode and SMS event occurs with LOW priority (which does not wake up FMA2YX), then the device does not send the message. It is saved in device memory until it wakes up from Deep Sleep mode and GSM modem starts working normally. After it wakes up, all the messages that are saved in memory will be sent, but keep in mind that only 10 messages can be saved in memory – all other messages will not be saved, until there is room in device memory.

5.13.4.1 SMS events configuration

Scenarios

To configure SMS events for scenarios, open Scenarios window and enable desired scenario. Then go to GSM ->SMS -> SMS events window and activate SMS event for it. Figure 44 shows how to enable Green Driving and Jamming Detection SMS Events. Note, that it is not recommended to use Green Driving with Over Speeding and Immobilizer scenario– it is advisable to have enabled only on of them. After enabling SMS events, different message texts can be written for different scenarios.

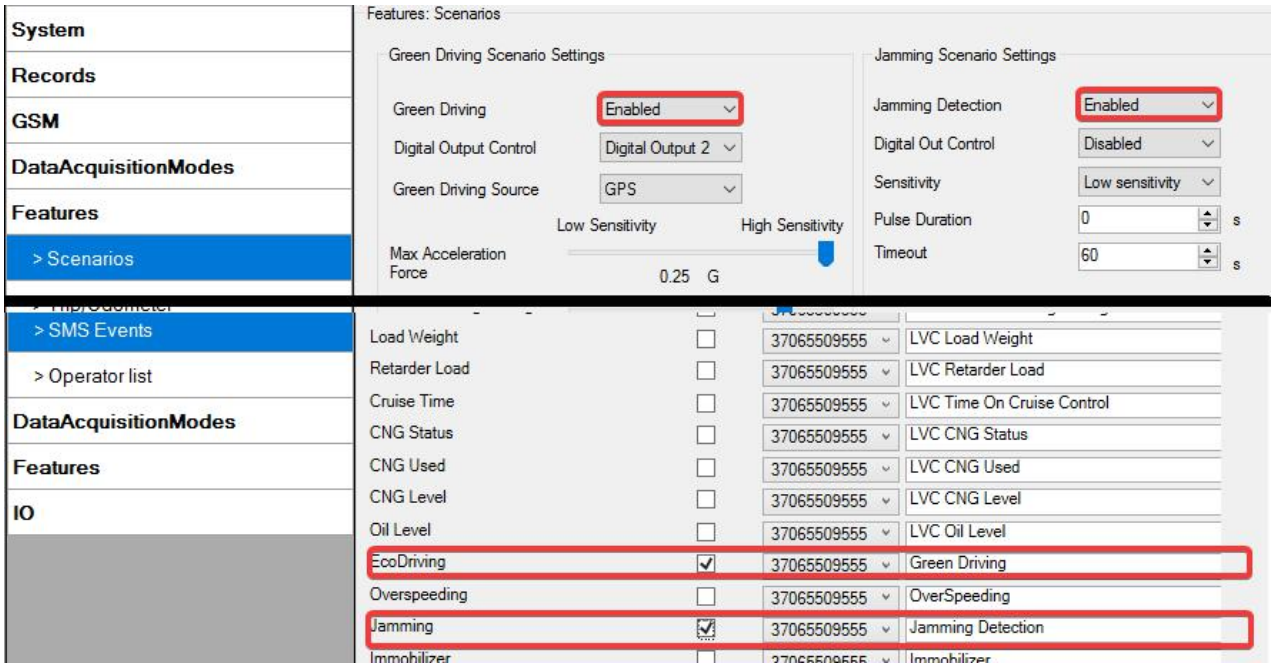

Figure 44. Scenarios SMS event configuration

When any of the scenarios events occurs, a text message will be sent to the predefined number.

Trip

In order to configure Trip SMS events click on Trip window and Enable Trip feature (figure 37). Then go to GSM -> SMS -> SMS Events settings and Enable Trip SMS event. After enabling SMS Events (figure 45), trip event will be triggered and message sent, when Trip starts (GNSS speed exceeds the speed in Start Speed (ex. 5 km/h) and when Trip stops, that is ignition is turned off longer then the time written in Ignition Off Timeout (ex. 60 seconds).

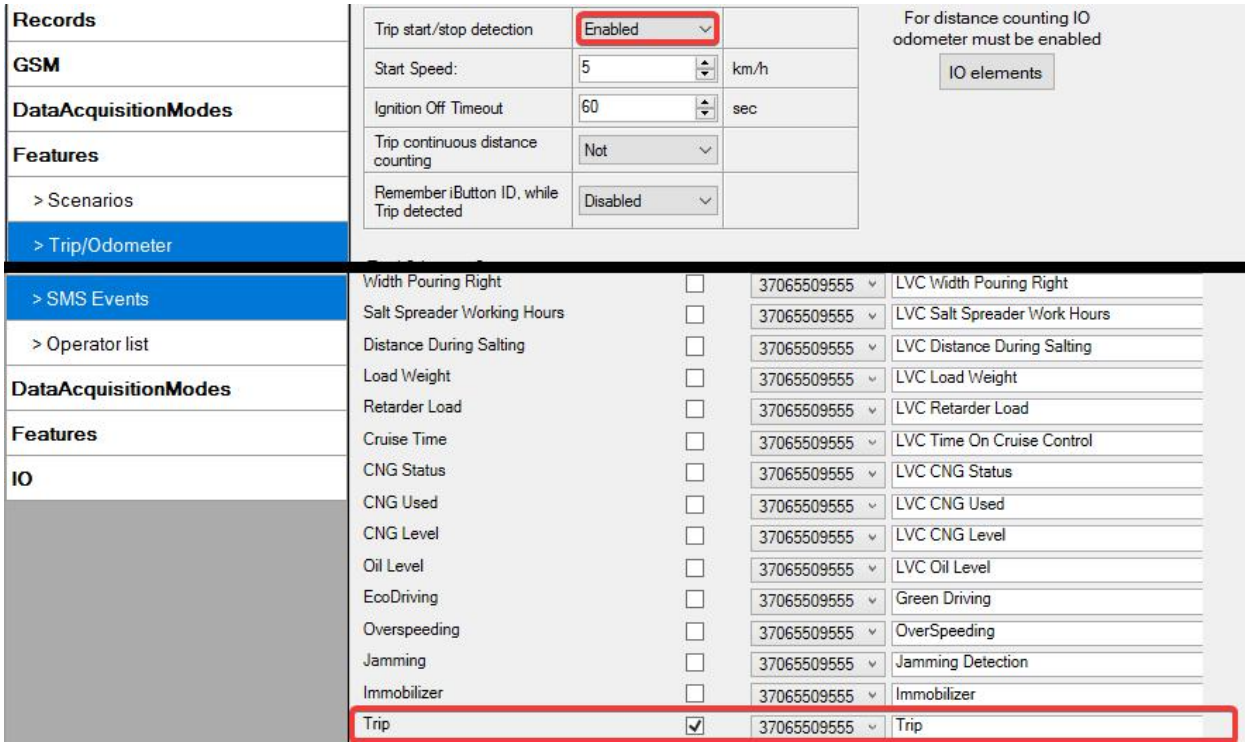

Figure 45. Trip Start/Stop SMS event configuration

Geofence

Geofence SMS event is triggered and message sent when the device exits and/or enters a configured Geofence zone. The Geofence zone must be configured to generate an event On Exit, On Enter or On Both (figure 46). If No Event is selected, then it is not possible to turn on SMS events. If several zones are created then SMS events can be turned on separately for each zone entering different text message.

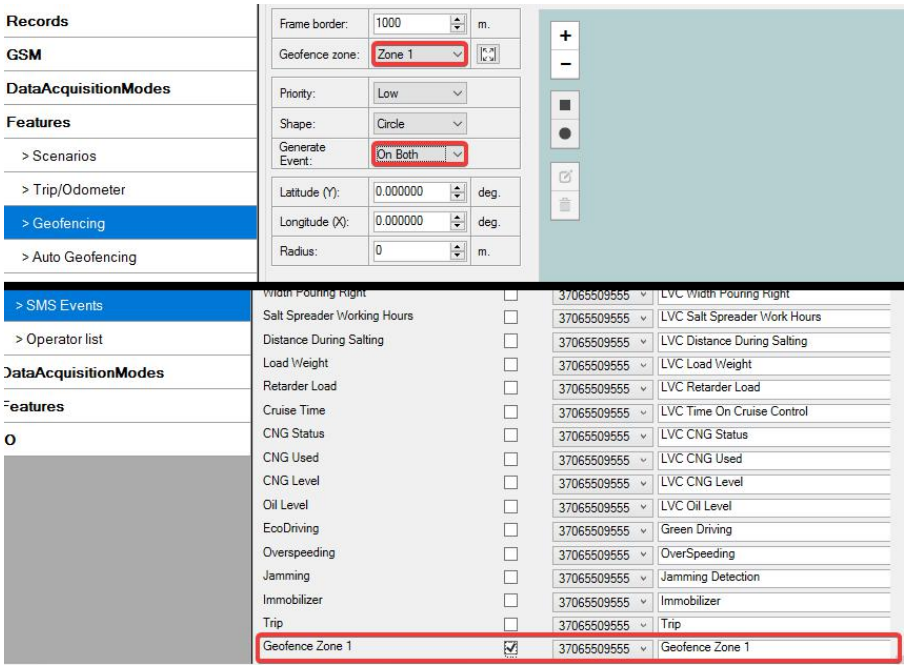

Figure 46. Geofence SMS event configuration

AutoGeofence

SMS events for AutoGeofence are configured the same as in Geofence. AutoGeofence and its SMS event configuration is next to Geofence configuration (figure 47).

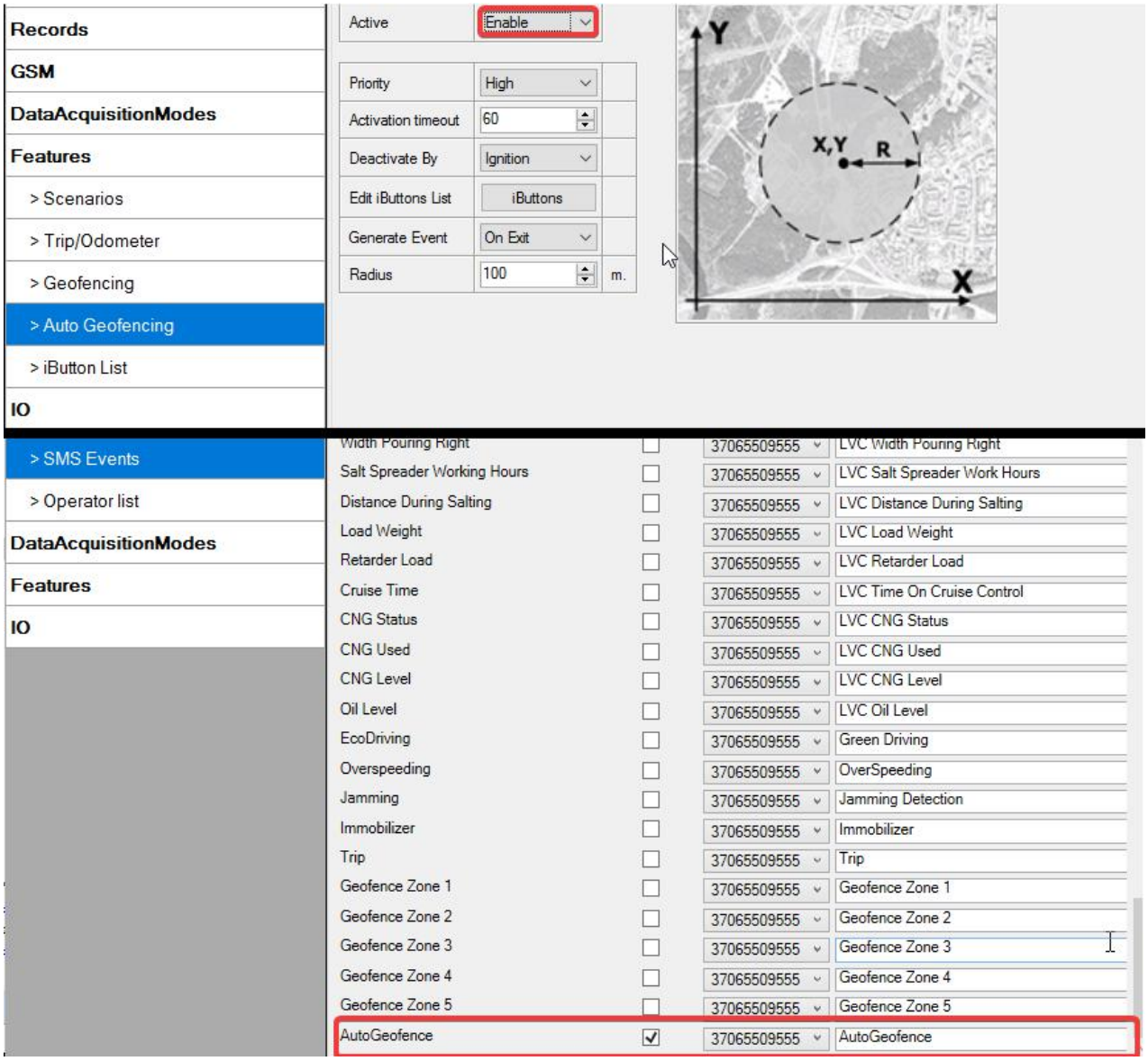

Figure 47. AutoGeofence SMS event configuration

I/O events

FMA2YX sends SMS event message when a configured I/O property enters and/or exits its configured High/Low boundaries or Hysteresis event generation is chosen (Monitoring does not generate event, so SMS event could not be configured). Every IO element SMS event can be configured to send individual message to different numbers.

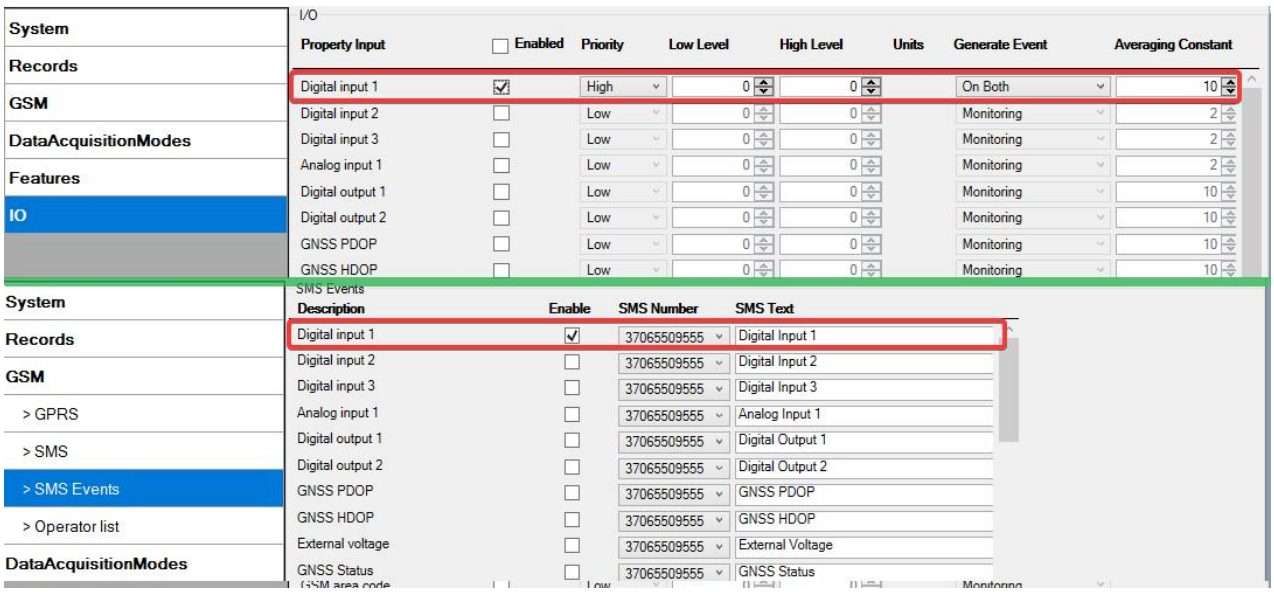

Figure 48. I/O SMS event configuration

5.14 I/O settings

When no I/O element is enabled, AVL packet comes with GPS information only. After enabling I/O element(s) AVL packet along with GPS information contains current value(s) of enabled I/O element.

Table 11. I/O element where sent to server if enabled.

Permanent I/O elements (are always sent to server if enabled)			
Nr.	Property Name	Bytes	Description
1	Digital Input Status 1	1	Logic: 0 / 1
2	Digital Input Status 2	1	Logic: 0 / 1
3	Digital Input Status 3	1	Logic: 0 / 1
4	Analog Input 1	2	Voltage: mV, 0 – 30 V
5	GSM level	1	GSM signal level value in scale 1 – 5
6	Speed	2	Value in km/h, 0 – xxx km/h
7	External Power Voltage	2	Voltage: mV, 0 – 30 V
8	GPS Power	2	States: 0 – GPS module is turned off, 2 – working, but no fix, 3 – working with GPS fix, 4 – GPS module is in sleep state, 5 – antenna is short circuit.
9	Dallas Temperature	4	10 * Degrees (°C), -55 - +115, if 3000 – Dallas error
10	iButton ID	8	iButton ID number
11	Data Mode	1	0 – home on stop, 1 – home on move, 2 – roaming on stop, 3 – roaming on move, 4 – unknown on stop, 5 – unknown on move
12	Digital output 1 state	1	Logic: 0 / 1
13	Digital output 2 state	1	Logic: 0 / 1
14	PDOP	2	Probability * 10; 0-500
15	HDOP	2	Probability * 10; 0-500
16	Trip distance	4	Distance between two records: m

17	Sleep mode	1	0 – not deep sleep mode, 1 – GPS sleep mode, 2 – deep sleep mode
18	Cell ID	2	GSM base station ID
19	Area Code	2	Location Area code (LAC), it depends on GSM operator. It provides unique number which assigned to a set of base GSM stations. Max value: 65536
20	Movement	1	0 – not moving, 1 – moving.
21	GSM operator Code	4	Currently used GSM Operator code
22	Ignition	1	Ignition status indication. Logic: 0 / 1
23	Battery Voltage	2	Shows battery Voltage in mV
24	Battery Current	2	Shows battery Current in mA
Eventual I/O elements (generate and send record to server only if appropriate conditions are met)			
Nr.	Property Name	Bytes	Description
25	Geofence zone 01	1	Event: 0 – target left zone, 1 – target entered zone
26	Geofence zone 02	1	Event: 0 – target left zone, 1 – target entered zone
27	Geofence zone 03	1	Event: 0 – target left zone, 1 – target entered zone
28	Geofence zone 04	1	Event: 0 – target left zone, 1 – target entered zone
29	Geofence zone 05	1	Event: 0 – target left zone, 1 – target entered zone
30	Auto Geofence	1	Event: 0 – target left zone, 1 – target entered zone
31	Trip	1	1 – trip start, 0 – trip stop
32	Immobilizer	1	1 – iButton connected
33	Green/ECO driving type	1	1 – harsh acceleration, 2 – harsh braking, 3 – harsh cornering
34	Green/ECo driving value	1	Harsh acceleration, braking or cornering – g*100 (value 123 -> 1.23g)
35	Over Speeding	2	At over speeding start km/h, at over speeding end km/h

There are two types of operations with Permanent I/O elements: simple monitoring and event generating. Monitoring method is used when current I/O information needed with regular GPS coordinates. Event generating method is used when additional AVL packet is needed when current value of I/O exceeds predefined High and Low levels. I/O settings allow defining I/O event criteria.

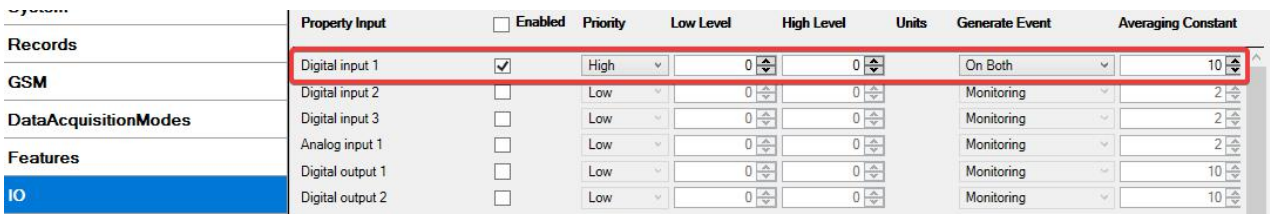

Figure 49. I/O settings

Enabled or disabled field – allows enabling I/O element so it is added to the data packet and is sent to the server. By default all I/O element are disabled and FMA2YX records only GPS coordinates.

Priority (AVL packet priority) can be low, high or panic. Regular packets are sent as Low priority records. When low priority event is triggered, FMA2YX makes additional record with indication that the reason for that was I/O element change. When High priority is selected, module makes additional record with high priority flag and sends event packet immediately to the server by GPRS. Panic priority triggers same actions as high priority, but if GPRS fails, it sends AVL packet using SMS mode if SMS is **enabled in SMS settings**.

High and Low levels – define I/O value range. If I/O value enters or exits this range, FMA2YX generates event. “Generate event” parameter defines when to generate event – when value enters defined range, exits it or both.

Averaging constant – it is an I/O event delay parameter. In some applications there is no need to generate events on every I/O range enter/exit immediately. Sometimes it is necessary to wait some time interval before event generating. Averaging constant allows setting I/O event delay (averaging). If I/O value is entering or leaving predefined range, it must have same value for Averaging constant time. 1 Averaging constant value equals about 100 miliseconds. In Deep Sleep mode there is no Averaging.

Note: I/O element’s “Movement sensor” Averaging constant is interpreted as Start Move Timeout in seconds (from 1 to 59).
Start Move Timeout – is a time interval required for movement sensor to be in the moving state, to consider vehicle as moving.

5.14.1 Monitoring

I/O monitoring starts after enabling I/O element and setting up I/O parameters as it is shown below:

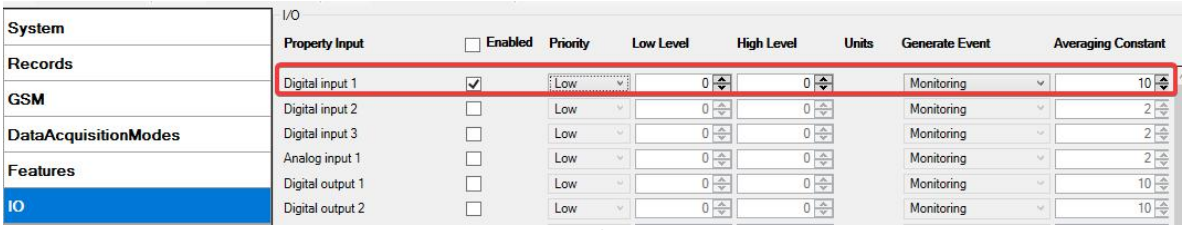

Figure 50. I/O settings

5.14.2 Event Generating

Events happen when the value of enabled I/O intersects thresholds (enter, exit or on both) predefined by High and Low level thresholds. Table below defines all available values of I/O settings.

Table 12. Event generation options.

Setting	Value
Priority	low, high
High level	maximum threshold
Low level	minimum threshold
Generate event	on interval enter, on interval exit, on both enter and exit
Average constant	1 – 2^{32} (4 Bytes)

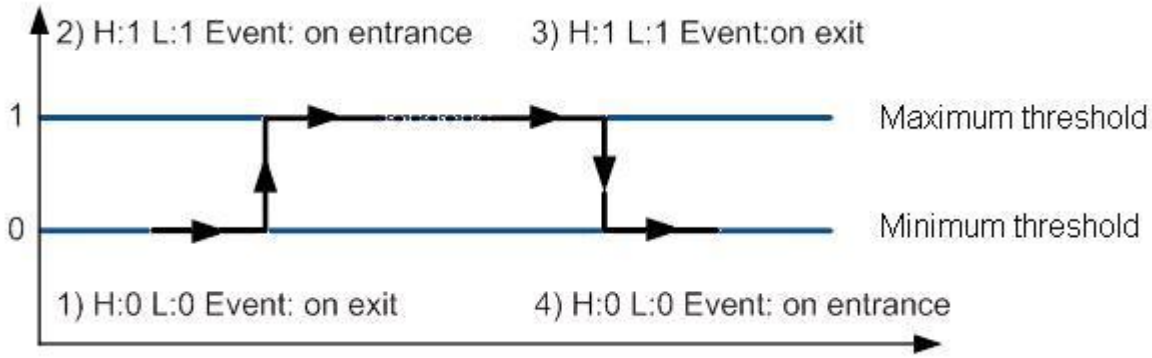

Figure 51. Digital Input event generation example

5.14.3 Hysteresis

Figure 52. Hysteresis parameter configuration

I/O elements can generate events according to hysteresis algorithm. If I/O event operand "Hysteresis" is selected, events will be generated as it is shown in the illustration below (I/O speed is taken as I/O value example):

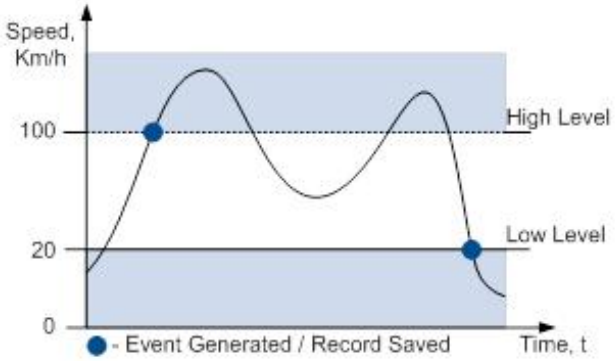

Figure 53. Event generation according hysteresis algorithm

6 SMS COMMAND LIST

Read chapter 5.10 to know how to construct a proper SMS message and send it to FMA2YX device. All commands are case sensitive. While FMA2YX operates in Deep Sleep mode and user tries to send SMS message it cannot arrive to FMA2YX device, because GSM/GPRS module is disabled most of the time (awakening intervals depend on Send Period parameter). FMA2YX will receive the SMS when it wakes up (exits deep sleep mode).

6.1 SMS command list

Table 13. SMS commands.

Command	Description	Response
getstatus	Modem Status information	Yes
getweektime	Current device time, Day of Week and amount of minutes passed since start of week	Yes
getops	List of currently available GSM operator	Yes
getcfgtime	Date and Time of last successful configuration	Yes
getgps	Current GPS data and time	Yes
ggps	Google Map Link information	Yes
cpureset	Reset CPU	No
resetprof	Reset all FLASH1 profile configuration to default profile	No
getver	Device / Modem / Code version information	Yes
getinfo	Device runtime system information	Yes
deleterecords	Delete all records saved on FLASH memory	No
getio	Readout inputs and outputs	Yes
readio #	Readout input value according entered ID, # - ID value	Yes
setdigout ## Y1 Y2	Set digital outputs: 0 – OFF, 1 – ON Y1 – timeout for DO1 Y2 – timeout for DO2	Yes
getparam #	Readout parameter value according entered ID. # - ID value	Yes
setparam # #	Set parameter value according entered ID and Value 1.# - ID value 2.# - New Parameter Value	Yes
getparam 1271 #	# values can be 1,2,3	Yes
Setparam 1271 # <value>	# is number from 0 to 49	Yes
flush #,#,#,#,#,#,#	Initiates all data sending to specified target server 1.# - IMEI 2.# - APN 3.# - LOGIN 4.# - PASS 5.# - IP 6.# - PORT 7.# - MODE (0-TCP/1-UDP)	No

readops #	1 – send first 20 operator codes, 2 – send from 21st to 40th operator codes, 3 – send all other operator codes	
sn #	Static navigation, 1 – enable, 0 – disable	Yes
banlist	Banned operators information	Yes
crashlog	Device last information before unexpected reset	Yes
delete_all_sms	Deletes all SMS	No
setkey # #	Set a new configuration keyword 1. # - Old Keyword 2. # - New Keyword	Yes
delkey #	Delete configuration keyword # - Keyword	Yes
dtcinfo	DTC information	Yes
setacc	Calibrate device with current coordinates	Yes

6.1.1 "getstatus"

Table 14. "getstatus" sms response description.

Response details	Description
Data Link	Indicate module connection to server at the moment: 0 – Not connected, 1 – connected
GPRS	Indicate if GPRS is available at the moment
Phone	Voice Call status: 0 – ready, 1 – unavailable, 2 – unknown, 3 – ringing, 4 – call in progress, 5 – asleep
SIM	SIM Status: 0-ready, 1-pin, 2-puk, 3-pin2, 4-puk2
OP	Connected to GSM Operator: numerical id of operator
Signal	GSM Signal Quality [0-5]
NewSMS	Indicate if new message received
Roaming	0 – Home Network, 1 – roaming
SMSFull	SMS storage is full? 0 – OK, 1 – SMS storage full
LAC	GSM Tower Location Area Code
Cell ID	GSM Tower Cell ID Code

Example: Data Link: 0 GPRS: 1 Phone: 0 SIM: 0 OP: 24602 Signal: 5 NewSMS: 0 Roaming: 0 SMSFull: 0 LAC: 1 Cell ID: 864

6.1.2 "getweektime"

Table 15. "getweektime" SMS response description.

Response details	Description
Clock Sync	Indicates system clock synchronization status. 0 – System is not synchronized, 1 – System synchronized
DOW	Day Of Week – indicates current day of week starting from 1 – Monday, 2 – Tuesday, etc.
Time	Indicates current GMT time
WeekTime	Indicates time in minutes starting from Monday 00:00 GMT

Example: Clock Sync: 1 DOW: 4 Time 12:58 Weektime: 6538

6.1.3 “getops”

Table 16. “getops” SMS response description.

Response details	Description
LIST	Returns list of current available allowed operators.

Example: (2,”LT BITE GSM”,”BITE”,”24602”),(3,”TELE2”,”TELE2”,”24603”).

6.1.4 “getcfgtime”

Table 17. “getcfgtime” SMS response description.

Response details	Description
Date/Time	Returns last performed configuration date and time.

Example: Last Configuration was performed on: 2017.4.15 5:45:19

6.1.5 “getgps”

Table 18. “getgps” SMS response description.

Response details	Description
GPS	Indicates valid (1) or invalid (0) GPS data
Sat	Count of currently available satellites
Lat	Latitude (Last good Latitude)
Long	Longitude (Last good Longitude)
Alt	Altitude
Speed	Ground speed, km/h
Dir	Ground direction, degrees
Date	Current date
Time	Current GMT time

Example: GPS:1 Sat:7 Lat:54.71473 Long:25.30304 Alt:147 Speed:0 Dir:77 Date: 2007/8/24 Time: 13:4:36

6.1.6 “ggps”

Table 19. “ggps” SMS response description.

Response details	Description
D	Date
T	Time
S	Actual Speed
C	Latitude (Last good Latitude), Longitude (Last good Longitude)
Url	Google Maps Link

Example: D:2013/7/4 T:0:0:0 S:0 C:0, 0 Url: http://maps.google.com/?q=0,0&om=1speed:0

6.1.7 “getver”

Table 20. “getver” SMS response description.

Response details	Description
Code Ver	Firmware version
Device IMEI	IMEI
Device ID	Device ID is used to detect by server which type of configuration to load
Bootloader Ver	Bootloader Version
Modem App Ver	Version of modem application
Rev	Firmware revision

Example: “Code Ver:01.27.04 Rev:1 Device IMEI: 352094084964789 Device ID: 000019 Bootloader Ver:01.19 Modem APP Ver:TM25Q_R_01.00.00.00_007,2017/07/10 15:45”.

6.1.8 “getinfo”

Table 21. “getinfo” SMS response description.

Response details	Description
INI	Device Initialization Time
RTC	RTC Time
RST	Restart Counter
ERR	Error Counter
SR	Number of Sent Records
BR	Number of broken records
CF	Profile CRC Fail counter
FG	Failed GPRS counter
FL	Failed link counter
UT	UPD Timeout counter
SMS	Sent SMS Counter
NOGPS	No GPS Timer
GPS	GPS receiver state. 0 – OFF, 1 – restarting, 2 – ON but no fix, 3 – ON and operational, 4 – sleep mode
SAT	Average satellites
RS	Reset Source Identification 1 – Low Power, 2 – W Watchdog, 3 – I Watchdog, 4 – Software reset, 5 – Power On, 6 - Pin Reset
MD	Data Mode state. 0 – Home and Stop, 1 – Home and Moving, 2 – Roaming and Stop, 3 – Roaming and Moving, 4 – Unknown and Stop, 5 – Unknown and Moving
RF	Records Found – number of records in the memory.

Example: INI:2013/10/11 8:44 RTC:2013/10/11 8:59 RST:1 ERR:0 SR:0 BR:0 CF:0 FG:0 FL:0 UT:0 SMS:1 NOGPS:0:14 GPS:2 SAT:0 RS:3 MD:4 RF:0

6.1.9 "getio"

Table 22. "getio" SMS response description.

Response details	Description
DI#	Digital Input state
AIN#	Analog input value
DO#	Digital Output state

Example: DI1:0 DI2:0 DI3:0 AIN:0.0000 DO1:0 DO2:0

6.1.10 "readio #"

Table 23. "readio #" SMS response description.

Response details	Description
ID	I/O element ID
Value	I/O Element value

Example: I/O ID:3 Value:0

6.1.11 setdigout ## Y1 Y2

Sets digital outputs to ON or OFF state (for some time if needed). Value is written as a row for OUT1 and OUT2 values.

Example: 'setdigout 01 0 5' will set OUT2 to high level for 5 seconds, while OUT1 to low level.

To ignore one digital output value and make ON/OFF state only to another digital output, question mark should be used.

Example: 'setdigout ?1' will set OUT2 to high level for indefinite period of time while OUT1 remains as it was set before.

6.1.12 "getparam ####"

Read parameter value. ID consists of 4 digits – first digit must be 1[1], second, third and fourth identifies parameter ID as described in Parameter List chapter.

Table 24. "getparam ####" description

Response details	Description
ID	Profile number and parameter ID
Value	Parameter value

Example: 'getparam 1115' command will request server IP address in profile1.

[1] FMA2YX devices have only one profile (1). If you had any experience with other devices like FM6300, you could notice that there are 4 implemented profiles.

6.1.13 "setparam #### #"

Sets new value for parameter. ID consists of 4 digits – first digit identifies profile, second, third and fourth identifies parameter ID as described in Parameter List chapter. Value field is used to define new parameter value.

Example: 'setparam 1245 127.0.0.1' will change configured IP address in profile1 with new value.

6.1.14 "getparam 1271 #/212 #"

values can be 1,2,3.
If # = 1, Operator codes from 0-19 are read from configuration and sent via SMS.
If #= 2, Operator codes from 20-39 are read from configuration and sent via SMS.
If # = 3, Operator codes from 40-49 are read from configuration and sent via SMS.
If # = any other, Operator codes from 0-19 are read from configuration and sent via SMS.

6.1.15 "setparam 1271 #"

If # is from 0 to 49 , # means index of operator code which has to be configured. Up to 20 operator codes may be configured in 1 SMS. Example: *"setparam 16 24602,24603,24605"*, here 16th, 17th and 18th operator codes are set. Note! Other operator codes are left unchanged in the configuration.

6.1.16 "readops #"

Send from device Operator List.

1 – send first 20 operator codes, 2 – send from 21st to 40th operator codes, 3 – send all other operator codes.

6.1.17 "flush #,#,#,#,#,#,#"

Initiates all data sending by GPRS to specified target server. Comma separated parameters go as numbered:

1.# - IMEI
2.# - APN
3.# - GPRS LOGIN
4.# - GPRS PASSWORD
5.# - IP
6.# - PORT
7.# - MODE (0-TCP/1-UDP)

Parameters are separated by comma (no spaces needed). In case you don't need to enter parameter (GPRS Login/GPRS Pass) – do not put space, simply put comma and write next parameter.

Example: "opa opa flush 353976012555151,banga,,,212.47.99.62,12050,0"

NOTE: If there is no APN username and password set, use 2 spaces before command name.

Table 25. "flush" SMS response description.

Response details	Description
FLUSH SMS Accepted	FLUSH SMS Accepted
# records found on FLASH	Number of records found on FLASH
Minimum Records to Send: #	Number of minimum saved records to send
GPRS Enabled: #	State of the GPRS connection, 0 – disabled; 1 – enabled
Time Sync: #	Indicates time synchronization on the device, 0 – not synchronized; 1 – synchronized

Example: FLUSH SMS Accepted. 11 records found on FLASH. Minimum Records to Send: 1. GPRS Enabled: 1. Time Sync: 1.

6.1.18 "sn #"

Enables or disables Static navigation. 1 – enable, 0 – disable.

6.1.19 "banlist"

Gives a list of all banned operators.
Example when no operators are banned: 00000.00s.0.000

6.1.20 "crashlog"

Provides you with latest information before the device has crashed for unexpected reasons. It is useful when the device acts unexpectedly or restarts for unexplained reasons.
Example if no unexpected reset: "Crash: "
Example if unexpected reset was detected: "Crash: 3051,3052,3053".

6.1.21 "setkey # #"

Changes device current configuration keyword.
Example: opa opa setkey 0101 3333
Here 0101 is an old keyword, 3333 is a new keyword.

If the keyword was not set, new keayword can be set using the same command.
Example: opa opa setkey 3333
Here 3333 is a new keyword.

6.1.22 "delkey # "

Deletes device current configuration keyword.
- keyword.

6.1.23 "setacc"

This command is used to manually calibrate current coordinates of the device. It is useful to use it with Eco driving. Device must be mounted using the mounting recommendations whose are provided 10.1.5 on this document, otherwise command won't have an effect.

7 Debug mode

FMA2YX is able to transmit its current state when connected to PC using USB cable. It is used to detect errors and provide information to find possible solutions when operating as unexpected. Download Terminal from:

http://avl1.teltonika.lt/Downloads/Software/Terminal.zip.

After launching terminal change baud rate to 115200 and handshaking – none. Select COM port which is assigned to "Virtual COM Port". Click on 'Start Log' button and save a new file. Then click 'Connect' to start receiving messages from FMA2YX.

Also you can log NMEA data directly. To get NMEA data, simply enter the following command into the command field: **.log_nmea:1$0a**.

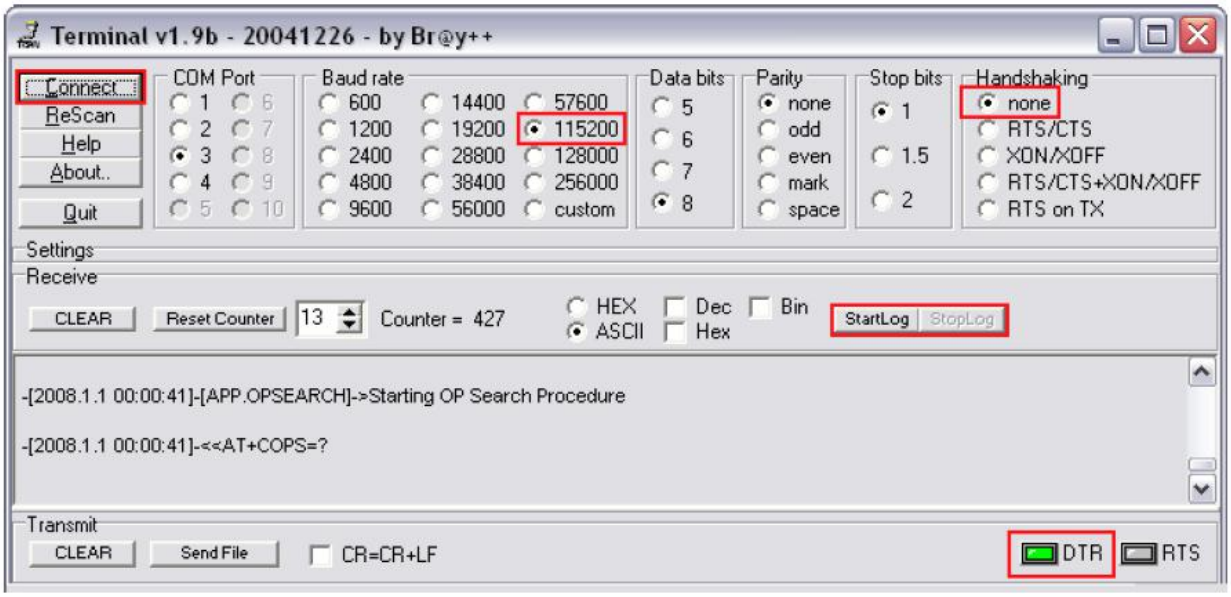

Figure 54. Terminal window for logging

8 Parameter List

8.1 Parameters value types

S8 – Signed Char
S8[*n*] – String of *n* Char
U8 – Unsigned Char
U16 – Unsigned Short
S32 – Signed Integer
U32 – Unsigned Integer
U64 – Unsigned Long Long Integer

8.2 System parameters

8.2.1 Sleep Mode (ID=1000)

Device has two sleep modes: GPS sleep and deep sleep mode. While sleep is disabled (value 0) module will never enter sleep mode, in sleep mode (value 1) module reduces level of power usage by turning GPS module to sleep, in deep sleep mode (value 2) module turns GPS module to sleep and switch GSM module off (note, that FMA2YX do not receive SMS while in deep sleep).

Table 26. Sleep Mode configurable range.

Minimum value	Maximum value	Recommended value	Goes with (depends on) parameters	Value type
0	2	-		U8

8.2.2 Sleep timeout (ID=200)

Sleep timeout is time after which FMA2YX goes to sleep or deep sleep if other requirements are met. It is measured in minutes.

Table 27. Sleep timeout configurable range.

Minimum value	Maximum value	Recommended value	Goes with (depends on) parameters	Value type
1	3000	-		U8

8.2.3 Analog Input value range (ID=1001)

Analog input measuring resolution and range can be defined as 0…10V (value 0) or 1…30V (value 1).

Table 28. Analog input value configurable range.

Minimum value	Maximum value	Recommended value	Goes with (depends on) parameters	Value type
0	1	-		U8

8.2.4 Stop Detection Source (ID=1002)

Device can operate and change its working mode according to motion detection source: ignition (value 0), movement sensor (value 1), GPS (value 2).

Table 29. Stop detection source configurable range.

Minimum value	Maximum value	Recommended value	Goes with (depends on) parameters	Value type
0	2	-	**8.5 Data Acquisition Modes parameters**	U8

8.2.5 Static Navigation Mode (ID=1003)

FMA2YX with enabled static navigation filters out false GPS jumps, when device is not moving. When option is disabled, it does not make any changes to collected GPS data.

Table 30. Static Navigation Mode configurable range.

Minimum value	Maximum value	Recommended value	Goes with (depends on) parameters	Value type
0	1	1		U8

8.2.6 Ignition source (ID=1004)

Device can operate and change its working mode according to motion detection source: Power Voltage (value 0), Digital Input 1 (value 1), movement (value 2).

Table 31. Ignition source configurable range.

Minimum value	Maximum value	Recommended value	Goes with (depends on) parameters	Value type
0	2	-	**High Voltage level (ID=1005)** **Low Voltage level (ID=1006)**	U8

8.2.7 High Voltage level (ID=1005)

When ignition source is selected as Power Voltage High level for ignition detection must be set.

Table 32. High Voltage level configurable range.

Minimum value	Maximum value	Recommended value	Goes with (depends on) parameters	Value type
0	30000	-	**Ignition source (ID=1004)** **Low Voltage level (ID=1006)**	U16

8.2.8 Low Voltage level (ID=1006)

When ignition source is selected as Power Voltage High level for ignition detection must be set.

Table 33. Low Voltage level configurable range.

Minimum value	Maximum value	Recommended value	Goes with (depends on) parameters	Value type
0	30000	-	**Ignition source (ID=1004)** **High Voltage level (ID=1005)**	U16

8.2.9 Records Saving/Sending without time synchronization (ID=201)

When Records saving/sending option is set to Always (parameter value is 1), FMA2YX does records and sends them without synchronization. When it is set to “After time sync” (parameter value is 2), FMA2YX waits for synchronization to save and send records. If parameter is set to “After position fix”(parameter value is 0), device waits for GPS fix from satellite to receive coordinates and correct time.

Table 34. Records Saving/Sending configurable range.

Minimum value	Maximum value	Recommended value	Goes with (depends on) parameters	Value type
0	2	-		U8

8.2.10 GNSS settings (ID=202)

This parameter sets Satellite System, available values: 0 – GNSS (all available); 1 – GPS only; 2 – GLONASS only.

Table 35. GNSS settings configurable range

Minimum value	Maximum value	Recommended value	Goes with (depends on) parameters	Value type
0	2	0		U8

8.2.11 GNSS fix Timeout (ID=1007)

This parameters defines GNSS fix Timeout for time synchronization via NTP.

Table 36. GNSS fix Timeout configurable range.

Minimum value	Maximum value	Recommended value	Goes with (depends on) parameters	Value type
1	259200	-		U8

8.2.12 NTP Time Synchronization (ID=1008)

This parameter Enables/Disables time synchronization from NTP server when there is no valid GPS signal from satellites, available values: 0 – disabled, 1 – enabled.

Table 37. NTP Time Synchronization configurable range.

Minimum value	Maximum value	Recommended value	Goes with (depends on) parameters	Value type
0	1	1		U8

8.3 Records parameters

8.3.1 Sorting (ID=1010)

Record sorting parameter is responsible for record sorting order. Value of 0 arranging data starting from newest, while value of 1 arranging data starting from oldest.

Table 38. Sorting configurable range.

Minimum value	Maximum value	Recommended value	Goes with (depends on) parameters	Value type
0	1	-	Data Acquisition Modes parameters (Send Period)	U8

8.3.2 Active Data Link Timeout (ID=1011)

This command defines time period for a connection between FMA2YX and server after successful data transfer while waiting for a new record.

Table 39. Active data link timeout configurable range.

Minimum value	Maximum value	Recommended value	Goes with (depends on) parameters	Value type
0	259200	-	Data Acquisition Modes parameters (Send Period)	U32

8.3.3 Server Response Timeout (ID=1012)

Time period (in seconds) device waits for server response.

Table 40. Server Response Timeout configurable range.

Minimum value	Maximum value	Recommended value	Goes with (depends on) parameters	Value type
1	300	-	Data Acquisition Modes parameters (Send Period)	U8

ATTENTION! Some GSM operators may disconnect the device from an active data link if the device doesn't send any data for a very long time, even if active data link timeout is set to maximum value. The amount of time that an operator keeps the link open depends solely on the operator. For example, if active data link timeout is set to maximum, 259200 seconds (72 hours), and the device sends data to server every 86400 seconds (24 hours), the operator might disconnect the link earlier and the device will have to connect to the server anew. This may cost extra, depending on the operator GPRS data charge. It is strongly recommended, when using active data link timeout, that data sending to the server should not be very rare (24 hours or more). If data sending is more frequent, then the operator will not disconnect the device form the server.

8.4 GSM parameters

8.4.1 GPRS content activation (ID=1240)

Parameter allows or does not allow GPRS usage. If GPRS is not allowed value is 0, if GPRS is allowed value is 1.

Table 41. GPRS content activation configurable range.

Minimum value	Maximum value	Recommended value	Goes with (depends on) parameters	Value type
0	1	-	**APN Name (ID=1242)** **APN user name (ID=1243)** **APN Password (ID=1244)**	S8

8.4.2 APN Name (ID=1242)

Parameter defines GPRS Access Point Name.

Table 42. APN name configurable range.

Minimum value	Maximum value	Recommended value	Goes with (depends on) parameters	Value type
Empty	32 char string	-	**GPRS content activation (ID=1240)** **APN user name (ID=1243)** **APN Password (ID=1244)**	S8[32]

8.4.3 APN username (ID=1243)

Parameter defines APN username. In case operator does not use username for login, value should be empty.

Table 43. APN username configurable range.

Minimum value	Maximum value	Recommended value	Goes with (depends on) parameters	Value type
Empty	30 char string	-	**GPRS content activation (ID=1240)** **APN Name (ID=1242)** **APN Password (ID=1244)**	S8[30]

8.4.4 APN Password (ID=1244)

Parameter defines APN password. In case operator does not use password for login, value should be empty.

Table 44. APN password configurable range.

Minimum value	Maximum value	Recommended value	Goes with (depends on) parameters	Value type
Empty	30 char string	-	**GPRS content activation (ID=1240)** **APN Name (ID=1242)** **APN user name (ID=1243)**	S8[30]

8.4.5 Domain (ID=1245)

Parameter defines AVL data destination server IP address. Example: 212.47.99.62

Table 45. Domain configurable range.

Minimum value	Maximum value	Recommended value	Goes with (depends on) parameters	Value type
0	50 char string	-	**GPRS content activation (ID=1240)** **Domain (ID=1245)**	S8[16]

8.4.6 Target Server Port (ID=1246)

Parameter defines AVL data destination server port number. Example: 12050

Table 46. Target server port configurable range.

Minimum value	Maximum value	Recommended value	Goes with (depends on) parameters	Value type
Empty	65535	-	**GPRS content activation (ID=1240)** **Target Server port (ID=1246)**	U16

8.4.7 Protocol (ID=1247)

Parameter defines GPRS data transport protocol. Module can use TCP or UDP to send data to server. For TCP protocol value is 0, for UDP protocol value is 1.

Table 47. Protocol configurable range.

Minimum value	Maximum value	Recommended value	Goes with (depends on) parameters	Value type
0	1	-	**GPRS content activation (ID=1240)**	U8

8.4.8 Always online (ID=1248)

Parameter allows keeping the link with a server open all the time. If Always online mode is not allowed value is 0, if it is allowed value is 1.

Table 48. Always online configurable range.

Minimum value	Maximum value	Recommended value	Goes with (depends on) parameters	Value type
0	1	-		S8

8.4.9 SMS Login (ID=1252)

User login is used to ensure module security. Used in every SMS that is sent to device. If there is no SMS login set, use space symbol instead of username to replace it when sending SMS.

Example: ba321

Table 49. SMS login configurable range.

Minimum value	Maximum value	Recommended value	Goes with (depends on) parameters	Value type
Empty	5 char	-	**SMS Password (ID=1253)** **Server Number (8.4.12)**	S8[5]

8.4.10 SMS Password (ID=1253)

User password is used to ensure module security. Used in every SMS that is sent to device. If there is no SMS password set, use space symbol instead of username to replace it when sending SMS.

Example: ab123

Table 50. SMS password configurable range.

Minimum value	Maximum value	Recommended value	Goes with (depends on) parameters	Value type
Empty	5 char	-	**SMS Login (ID=1252)** **Serber GSM Number (8.4.12)**	S8[5]

8.4.11 SMS data sending settings (ID=1250)

Parameter allows or does not allow sending AVL data using binary SMS. If SMS use is not allowed value is 0 and 1 if SMS use is allowed.

Table 51. SMS data sending settings configurable range.

Minimum value	Maximum value	Recommended value	Goes with (depends on) parameters	Value type
0	1	-	**SMS Data send week time schedule (ID=1273)**	S8

8.4.12 SMS Data send week time schedule (ID=1273)

Parameter defines SMS data sending according to week time schedule. This parameter is used to set data sending on selected week days and hours. Minimum time step is 10 minutes.

Example value: 7F,FF,FF,FF,FF,FF,FF,FF,FF,FF,FF,FF,FF,FF,FF,FF,FF,FF,FF,FF

For more information *read 8.5.1.4 "Schedule parameter format".*

8.4.13 Authorized phone numbers (ID=1260-1269)

If at least one number is entered then only those number can send messages to device. Number must be entered without "+" or "00".

Example: 37060012346

Table 52. Authorized phone numbers configurable range.

Minimum value	Maximum value	Recommended value	Goes with (depends on) parameters	Value type
1 digit	16 digits	-		S8[17]

If SMS data sending is enabled (ID=1250) first value in a list is server GSM number. The SMS with 24 coordinates is sent to this number.

8.4.14 SMS Event PreDefined Numbers (ID=150-159)

In this field are written GSM numbers, to which will be sent "Event SMS" text message. Number must be entered without "+" or "00".

Example: 37060012346

Table 53. SMS Event PreDefined Numbers configurable range.

Minimum value	Maximum value	Recommended value	Goes with (depends on) parameters	Value type
1 digit	16 digits	-		S8[17]

8.4.15 Operator List (ID=1271)

Parameter defines operator list. According to this list module selects operating profile. GSM operator codes are comma separated. First in a list is *Home Operator Code*, then Preferred Roaming Operator Codes are written. Example: 24601, 24602, 24705…24503.

Table 54. Operator List configurable range..

Minimum value	Maximum value	Recommended value	Goes with (depends on) parameters	Value type
Empty	7 digits	-		U32

8.4.16 Black Operator list (ID= 1272)

Parameter defines the operator list. X defines the starting position that will be changed: If X is between 0 and 49, X shows the index of the operator code from the blacklist (the operator code has to be previously configured in the list). Up to 20 blacklist operator codes may be configured in 1 SMS. Example: *setparam 1272 16 24602,24603,24605.*

Table 55. Black Operator List configurable range..

Minimum value	Maximum value	Recommended value	Goes with (depends on) parameters	Value type
Empty	7 digits	-		U32

8.5 Data Acquisition Modes parameters

8.5.1 Home Network GSM operator code "Vehicle on STOP" parameters

8.5.1.1 Min Period (ID=1540)

This parameter indicates time interval in seconds in order to acquire new record. If value is 0 it means no records by min period will be saved.

Table 56. Home operator "Vehicle on STOP" Min Period configurable range..

Minimum value	Maximum value	Recommended value	Goes with (depends on) parameters	Value type
0	2592000	-		U32

8.5.1.2 Min Saved Records (ID=1543)

This parameter defines minimum number of records in one data packet that can be sent to server. It has higher priority than Data Send Period (ID=1544).

Table 57. Home operator "Vehicle on STOP" Min Saved Records configurable range..

Minimum value	Maximum value	Recommended value	Goes with (depends on) parameters	Value type
1	255	1	**GPRS Week Time (ID=1545)**	U8

8.5.1.3 Send Period (ID=1544)

This parameter indicates frequency (time interval in seconds) of sending data to server.

Table 58. Home operator "Vehicle on STOP" Send Period configurable range..

Minimum value	Maximum value	Recommended value	Goes with (depends on) parameters	Value type
0	2592000	-	**Min Saved Records (ID=1543)** **GPRS Week Time (ID=1545)**	U32

8.5.1.4 GPRS Week Time (ID=1545)

This parameter manages when it is allowed to open GPRS context. When module starts it is prohibited to open the context. When modem's GPRS context is closing (for example changing network) it is allowed to open it only at a defined time. It is possible to allow connections every 10 minutes up to once per day.

Example value: 7F,FF,FF,FF,FF,FF,FF,FF,FF,FF,FF,FF,FF,FF,FF,FF,FF,FF,FF

Schedule parameter format:

Time is defined as 19 byte array. First byte of array defines week days; the rest 18 bytes define timestamps with 10 minute interval. In first byte, first bit (LSB) defines if module should connect to GPRS (send SMS) on Monday, second bit – on Tuesday and so on up to seventh bit – which means Sunday. Eighth bit (MSB) is not used. If bits value is 0 then device is not allowed to open GPRS context, but if it is already open – does not close it. If value is 1 it will work as day minutes are defined in rest of the bytes. Day's minutes are defined by 18 bytes (144 bits). Every n^{th} bit (beginning from the first bit (LSB) and ending 18 bytes 8th bit (MSB)) indicates every 10th minute of the day (day has 1440 minutes).

Sample: GPRS will be allowed on Monday to Friday at 8:00 and 16:00 GMT. The following value should be configured:

00011111 00000000 00000000 00000000 000000000 00000000 00000000 00000001 00000000 00000000 00000000 00000000 00000000 000000001 00000000 00000000 00000000 00000000 00000000

Red bits indicate that GPRS will be allowed every day except Saturdays and Sundays. Blue bits indicate 480 and 720 minutes (480min = 8h and 720min = 16h). So the parameter value should be: 1F,00,00,00,00,00,00,01,00,00,00,00,00,01,00,00,00,00,00

It should be sent as UTF8 encoded string.

8.5.2 Home Network GSM operator code "Vehicle MOVING" parameters

8.5.2.1 Min Period (ID=1550)

This parameter indicates time interval in seconds in order to acquire new record. If value is 0 it means no records by min period will be saved.

Table 59. Home operator "Vehicle MOVING" Min Period configurable range.

Minimum value	Maximum value	Recommended value	Goes with (depends on) parameters	Value type
0	2592000	-	**Min Distance (ID=1551)** **Min Angle (ID=1552)** **GPRS Week Time (ID=1555)**	U32

8.5.2.2 Min Distance (ID=1551)

This parameter indicates distance in meters in order to acquire new record. Record is stored when the distance between previous records is greater than parameters value. If value is 0 it means no records by min distance will be saved.

Table 60. Home operator "Vehicle MOVING" Min Distance configurable range.

Minimum value	Maximum value	Recommended value	Goes with (depends on) parameters	Value type
0	65535	-	**Min Period (ID=1550)** **Min Angle (ID=1552)** **Min Speed (ID=1556)** **GPRS Week Time (ID=1555)**	U32

8.5.2.3 Min Angle (ID=1552)

This parameter indicates angle in degrees in order to acquire new record. If angle difference between last recorded coordinate and current position is greater than defined value, new record is stored. This parameter is operational, when speed is higher than 10km/h. If value is 0 it means no records by min angle will be saved.

Table 61. Home operator "Vehicle MOVING" Min Angle configurable range.

Minimum value	Maximum value	Recommended value	Goes with (depends on) parameters	Value type
0	180	-	**Min Period (ID=1550)** **Min Distance (ID=1551)** **Min Speed (ID=1556)** **GPRS Week Time (ID=1555)**	U16

8.5.2.4 Min Saved Records (ID=1553)

This parameter defines minimum number of records in one data packet that can be sent to server. It has higher priority than Data Send Period (ID=1554).

Table 62. Home operator "Vehicle MOVING" Min Saved Records configurable range.

Minimum value	Maximum value	Recommended value	Goes with (depends on) parameters	Value type
1	255	1	**Min Period (ID=1550)** **Min Distance (ID=1551)** **Min Angle (ID=1552)** **Min Speed (ID=1556)** **GPRS Week Time (ID=1555)**	U8

8.5.2.5 Send Period (ID=1554)

This parameter indicates frequency (time interval in seconds) of sending data to server.

Table 63. Home operator "Vehicle MOVING" Send Period configurable range.

Minimum value	Maximum value	Recommended value	Goes with (depends on) parameters	Value type
0	2592000	-	**GPRS Week Time (ID=1545)**	U32

8.5.2.6 GPRS Week Time (ID=1555)

Read chapter 8.5.1.4.

8.5.2.7 Min Speed (ID=1556)

This parameter indicates speed difference in order to acquire new record. If speed difference between last recorded coordinate and current position is greater than defined value, new record is stored. If value is 0 it means no records by min distance will be saved.

Table 64. Home operator "Vehicle MOVING" Min Speed configurable range.

Minimum value	Maximum value	Recommended value	Goes with (depends on) parameters	Value type
0	255	10	**Min Period (ID=1550)** **Min Distance (ID=1551)** **Min Angle (ID=1552)** **Min Speed Source(ID=1557)** **GPRS Week Time (ID=1555)**	U16

8.5.2.8 Min Speed Source (ID=1557)

This parameter defines Source for speed difference calculation: 0 – GPS, 1 – LVCAN

Table 65. operator "Vehicle MOVING" Min Speed Source configurable range.

Minimum value	Maximum value	Recommended value	Goes with (depends on) parameters	Value type
0	1	0	**Min Speed (ID=1556)**	U8

8.5.3 Roaming Network GSM operator code "Vehicle on STOP" parameters

8.5.3.1 Min Period (ID=1560)

This parameter indicates time interval in seconds in order to acquire new record. If value is 0 it means no records by min period will be saved.

Table 66. Roaming operator "Vehicle on STOP" Min Period configurable range.

Minimum value	Maximum value	Recommended value	Goes with (depends on) parameters	Value type
0	2592000	-		U32

8.5.3.2 Min Saved Records (ID=1563)

This parameter defines minimum number of records in one data packet that can be sent to server. It has higher priority than Data Send Period (ID=1564).

Table 67. Roaming operator "Vehicle on STOP" Min Saved Records configurable range.

Minimum value	Maximum value	Recommended value	Goes with (depends on) parameters	Value type
1	255	1	**GPRS Week Time (ID=1565)**	U8

8.5.3.3 Send Period (ID=1564)

This parameter indicates frequency (time interval in seconds) of sending data to server.

Table 68. Roaming operator "Vehicle on STOP" Send Period configurable range.

Minimum value	Maximum value	Recommended value	Goes with (depends on) parameters	Value type
0	2592000	-	**Min Saved Records (ID=1563)** **GPRS Week Time (ID=1565)**	U32

8.5.3.4 GPRS Week Time (ID=1565)

Read chapter 8.5.1.4.

8.5.4 Roaming Network GSM operator code "Vehicle MOVING" parameters

8.5.4.1 Min Period (ID=1570)

This parameter indicates time interval in seconds in order to acquire new record. If value is 0 it means no records by min period will be saved.

Table 69. Roaming operator "Vehicle MOVING" Min Period configurable range.

Minimum value	Maximum value	Recommended value	Goes with (depends on) parameters	Value type
0	2592000	-	**Min Distance (ID=1571)** **Min Angle (ID=1572)** **Min Speed (ID=1576)** **GPRS Week Time (ID=1575)**	U32

8.5.4.2 Min Distance (ID=1571)

This parameter indicates distance in meters in order to acquire new record. Record is stored when the distance between previous records is greater than parameter's value. If value is 0 it means no records by min distance will be saved.

Table 70. Roaming operator "Vehicle MOVING" Min Distance configurable range.

Minimum value	Maximum value	Recommended value	Goes with (depends on) parameters	Value type
0	65535	-	**Min Period (ID=1570)** **Min Angle (ID=1572)** **Min Speed (ID=1576)** **GPRS Week Time (ID=1575)**	U32

8.5.4.3 Min Angle (ID=1572)

This parameter indicates angle in degrees in order to acquire new record. If angle difference between last recorded coordinate and current position is greater than defined value, new record is stored. This parameter is operational, when speed is higher than 10km/h. If value is 0 it means no records by min angle will be saved.

Table 71. Roaming operator "Vehicle MOVING" Min Angle configurable range.

Minimum value	Maximum value	Recommended value	Goes with (depends on) parameters	Value type
0	180	-	**Min Period (ID=1570)** **Min Distance (ID=1571)** **Min Speed (ID=1576)** **GPRS Week Time (ID=1575)**	U16

8.5.4.4 Min Saved Records (ID=1573)

This parameter defines minimum number of records in one data packet that can be sent to server. It has higher priority than Data Send Period (ID=1574).

Table 72. Roaming operator "Vehicle MOVING" Min Saved Records configurable range.

Minimum value	Maximum value	Recommended value	Goes with (depends on) parameters	Value type
1	255	1	**Min Period (ID=1570)** **Min Distance (ID=1571)** **Min Angle (ID=1572)** **GPRS Week Time (ID=1575)**	U8

8.5.4.5 Send Period (ID=1574)

This parameter indicates frequency (time interval in seconds) of sending data to server.

Table 73. Roaming operator "Vehicle MOVING" Send Period configurable range.

Minimum value	Maximum value	Recommended value	Goes with (depends on) parameters	Value type
0	2592000	-	**Min Saved Record (ID=1573)** **GPRS Week Time (ID=1575)**	U32

8.5.4.6 GPRS Week Time (ID=1575)

Read chapter 8.5.1.4.

8.5.4.7 Min Speed (ID=1576)

This parameter indicates speed difference in order to acquire new record. If speed difference between last recorded coordinate and current position is greater than defined value, new record is stored. If value is 0 it means no records by min distance will be saved.

Table 74. Roaming operator "Vehicle MOVING" Min Speed configurable range.

Minimum value	Maximum value	Recommended value	Goes with (depends on) parameters	Value type
0	255	10	**Min Period (ID=1570)** **Min Distance (ID=1571)** **Min Angle (ID=1572)** **Min Speed Source (ID=1577)** **GPRS Week Time (ID=1575)**	U16

8.5.4.8 Min Speed Source (ID=1577)

This parameter defines Source for speed difference calculation: 0 – GPS, 1 – LVCAN

Table 75. Roaming operator "Vehicle MOVING" Min Speed Source configurable range.

Minimum value	Maximum value	Recommended value	Goes with (depends on) parameters	Value type
0	1	0	**Min Speed (ID=1576)**	U8

8.5.5 Unknown Network GSM operator code "Vehicle on STOP" parameters

8.5.5.1 Min Period (ID=1580)

This parameter indicates time interval in seconds in order to acquire new record. If value is 0 it means no records by min period will be saved.

Table 76. Unknown operator "Vehicle on STOP" Min Period configurable range.

Minimum value	Maximum value	Recommended value	Goes with (depends on) parameters	Value type
0	2592000	-		U32

8.5.5.2 Min Saved Records (ID=1583)

This parameter defines minimum number of records in one data packet that can be sent to server. It has higher priority than Data Send Period (ID=1584).

Table 77. Unknown operator "Vehicle on STOP" Min Saved Records configurable range.

Minimum value	Maximum value	Recommended value	Goes with (depends on) parameters	Value type
1	255	1	**GPRS Week Time (ID=1585)**	U8

8.5.5.3 Send Period (ID=1584)

This parameter indicates frequency (time interval in seconds) of sending data to server.

Table 78. Unknown operator "Vehicle on STOP" Send Period configurable range.

Minimum value	Maximum value	Recommended value	Goes with (depends on) parameters	Value type
0	2592000	-	**Min Saved Record (ID=1583)** **GPRS Week Time (ID=1585)**	U32

8.5.5.4 GPRS Week Time (ID=1585)

Read chapter 8.5.1.4.

8.5.6 Unknown Network GSM operator code "Vehicle MOVING" parameters

8.5.6.1 Min Period (ID=1590)

This parameter indicates time interval in seconds in order to acquire new record. If value is 0 it means no records by min period will be saved.

Table 79. Unknown operator "Vehicle MOVING" Min Period configurable range.

Minimum value	Maximum value	Recommended value	Goes with (depends on) parameters	Value type
0	2592000	-	**Min Distance (ID=1591)** **Min Angle (ID=1592)** **Min Speed (ID=1596)** **Min Speed Source (ID=1597)** **GPRS Week Time (ID=1595)**	U32

8.5.6.2 Min Distance (ID=1591)

This parameter indicates distance in meters in order to acquire new record. Record is stored when the distance between previous records is greater than parameter's value. If value is 0 it means no records by min distance will be saved.

Table 80. Unknown operator "Vehicle MOVING" Min Distance configurable range.

Minimum value	Maximum value	Recommended value	Goes with (depends on) parameters	Value type
0	65535	-	**Min Period (ID=1590)** **Min Angle (ID=1592)** **Min Speed (ID=1596)** **GPRS Week Time (ID=1595)**	U32

8.5.6.3 Min Angle (ID=1592)

This parameter indicates angle in degrees in order to acquire new record. If angle difference between last recorded coordinate and current position is greater than defined value, new record is stored. This parameter is operational, when speed is higher than 10km/h. If value is 0 it means no records by min angle will be saved.

Table 81. Unknown operator "Vehicle MOVING" Min Angle configurable range.

Minimum value	Maximum value	Recommended value	Goes with (depends on) parameters	Value type
0	180	-	**Min Period (ID=1590)** **Min Angle (ID=1592)** **Min Speed (ID=1596)** **GPRS Week Time (ID=1595)**	U16

8.5.6.4 Min Saved Records (ID=1593)

This parameter defines minimum number of records in one data packet that can be sent to server. It has higher priority than Data Send Period (ID=1594).

Table 82. Unknown operator "Vehicle MOVING" Min Saved Records configurable range.

Minimum value	Maximum value	Recommended value	Goes with (depends on) parameters	Value type
1	255	1	**Min Period (ID=1590)** **Min Distance (ID=1591)** **Min Angle (ID=1592)** **Min Speed (ID=1596)** **GPRS Week Time (ID=1595)**	U8

8.5.6.5 Send Period (ID=1594)

This parameter indicates frequency (time interval in seconds) of sending data to server. In order to send data to server GPRS parameters must be enabled

Table 83. Unknown operator "Vehicle MOVING" Send Period configurable range.

Minimum value	Maximum value	Recommended value	Goes with (depends on) parameters	Value type
0	2592000	-	**Min Saved Record (ID=1593)** **GPRS Week Time (ID=1595)**	U32

8.5.6.6 GPRS Week Time (ID=1595)

Read chapter 8.5.1.4.

8.5.6.7 Min Speed (ID=1596)

This parameter indicates speed difference in order to acquire new record. If speed difference between last recorded coordinate and current position is greater than defined value, new record is stored. If value is 0 it means no records by min distance will be saved.

Table 84. Unknown operator "Vehicle MOVING" Min Spedd configurable range.

Minimum value	Maximum value	Recommended value	Goes with (depends on) parameters	Value type
0	255	1	**Min Period (ID=1590)** **Min Distance (ID=1591)** **Min Angle (ID=1592)** **Min Speed Source (ID=1597)** **GPRS Week Time (ID=1595)**	U16

8.5.6.8 Min Speed Source (ID=1597)

This parameter defines Source for speed difference calculation: 0 – GPS, 1 – LVCAN

Table 85. Unknown operator "Vehicle MOVING" Min Speed Source configurable range.

Minimum value	Maximum value	Recommended value	Goes with (depends on) parameters	Value type
0	1	0	**Min Speed (ID=1596)**	U8

8.6 Features Parameters

8.6.1 Green driving scenario (ID=1890)

This parameter lets enable/disable Green driving scenario. 0 – disable, 1 – enable.

Table 86. Green driving scenario configurable range.

Minimum value	Maximum value	Recommended value	Goes with (depends on) parameters	Value type
0	1	-		U8

8.6.2 Green Driving digital output control (ID=1891)

This parameter defines digital output control on Green Driving scenario. 0 – disable, 1 – DOUT1, 2 – DOUT2.

Table 87. Green Driving digital output control configurable range.

Minimum value	Maximum value	Recommended value	Goes with (depends on) parameters	Value type
0	2	-	**Green driving scenario (ID=1890)**	U8

8.6.3 Green Driving source (ID=1909)

This parameter defines green driving scenario source. 0 – GPS, 1 – Accelerometer.

Table 87. Green Driving digital output control configurable range.

Minimum value	Maximum value	Recommended value	Goes with (depends on) parameters	Value type
0	1	-	**Green driving scenario (ID=1890)**	U8

8.6.4 Max Acceleration Force (ID=1892)

It is max allowed acceleration force which can be reached while accelerating without triggering harsh acceleration event.

Table 88. Max Acceleration Force configurable range.

Minimum value	Maximum value	Recommended value	Goes with (depends on) parameters	Value type
0.25	0.85	0.25	**Green driving scenario (ID=1890)**	Float

8.6.5 Max Braking Force (ID=1893)

It is max allowed braking force which can be reached while braking without triggering harsh braking event.

Table 89. Max Braking Force configurable range.

Minimum value	Maximum value	Recommended value	Goes with (depends on) parameters	Value type
0.25	0.85	0.35	**Green driving scenario (ID=1890)**	Float

8.6.6 Max Cornering Force (ID=1894)

It is max allowed cornering force which can be reached while cornering without triggering harsh cornering event.

Table 90. Max Cornering Force configurable range.

Minimum value	Maximum value	Recommended value	Goes with (depends on) parameters	Value type
0.1	1.0	0.2	**Green driving scenario (ID=1890)**	U16

Reference for Max Cornering Force values:

- 0,4 - 0,45 G force – items that are left on the back seat start to slide to the side while the car is on turn;
- 0,75 – 0,95 G force – most of the cars loose grip on turn (normal environment conditions).

8.6.7 Overspeeding scenario (ID=1895)

This parameter enables/disables Overspeeding scenario. 0 – disable, 1 – enable.

Table 91. Overspeeding scenario configurable range.

Minimum value	Maximum value	Recommended value	Goes with (depends on) parameters	Value type
0	1	-		U8

8.6.8 Over Speeding digital output control (ID=1896)

This parameter defines digital output control on Overspeeding scenario. 0 – disable, 1 – DOUT1, 2 – DOUT2.

Table 92. Over Speeding digital output control configurable range.

Minimum value	Maximum value	Recommended value	Goes with (depends on) parameters	Value type
0	2	-	**Overspeeding scenario (ID=1895)**	U8

8.6.9 Max allowed speed (ID=1897)

This parameters defines max allowed speed on Overspeeding scenario.

Table 93. Max allowed speed configurable range.

Minimum value	Maximum value	Recommended value	Goes with (depends on) parameters	Value type
0	260	-	**Overspeeding scenario (ID=1895)**	U8

8.6.10 Jamming scenario (ID=1898)

This parameter enables/disables Jamming scenario. 0 – disable, 1 – enable.

Table 94. Jamming scenario configurable range.

Minimum value	Maximum value	Recommended value	Goes with (depends on) parameters	Value type
0	1	-		U8

8.6.11 Jamming digital output control (ID=1899)

This parameter defines digital output control on Jamming scenario. 0 – disable, 1 – DOUT1, 2 – DOUT2.

Table 95. Jamming digital output control configurable range.

Minimum value	Maximum value	Recommended value	Goes with (depends on) parameters	Value type
0	2	-	**Jamming scenario (ID=1899)**	U8

8.6.12 Jamming sensitivity (ID=1900)

This parameter defines Jamming sensitivity. 0 – low sensitivity (50 RSSI), 1 – medium sensitivity (30 RSSI), 2 – high sensitivity (10 RSSI).

Table 96. Jamming sensitivity configurable range.

Minimum value	Maximum value	Recommended value	Goes with (depends on) parameters	Value type
0	3	-	**Jamming scenario (ID=1899)**	U8

8.6.13 Jamming Timeout (ID=1901)

This parameter represents DOUT turning on timeout when jamming is detected.

Table 97. Jamming Timeout configurable range.

Minimum value	Maximum value	Recommended value	Goes with (depends on) parameters	Value type
0	65535	60	**Jamming scenario (ID=1899)** **Jamming digital output control (ID=1899)**	U16

8.6.14 Jamming Pulse duration (ID=1902)

This parameter defines the Jamming Pulse duration after which DOUT is turned on.

Table 98. Jamming Pulse duration configurable range.

Minimum value	Maximum value	Recommended value	Goes with (depends on) parameters	Value type
0	65535	0	**Jamming scenario (ID=1899)** **Jamming digital output control (ID=1899)**	U16

8.6.15 Immobilizer scenario (ID=1903)

This parameter lets enable/disable Immobilizer scenario. 0 – disable, 1 – enable.

Table 99. Immobilizer scenario configurable range.

Minimum value	Maximum value	Recommended value	Goes with (depends on) parameters	Value type
0	1	-		U8

8.6.16 Immobilizer digital output control (ID=1904)

This parameter defines digital output control on Immobilizer scenario. 0 – disable, 1 – DOUT1, 2 – DOUT2.

Table 100. Immobilizer digital output control configurable range.

Minimum value	Maximum value	Recommended value	Goes with (depends on) parameters	Value type
0	2	-	**Immobilizer scenario (ID=1903)**	U8

8.6.17 iButton list checking (ID=1905)

This parameter enables/disables iButton list chenking. 0 – disable, 1 – enable.

Table 101. iButton list checking configurable range.

Minimum value	Maximum value	Recommended value	Goes with (depends on) parameters	Value type
0	1	-	**Immobilizer scenario (ID=1903)** **iButtons list (ID=3500-3999)**	U8

8.6.18 Immobilizer ignition off timeout (ID=1906)

This parameter represents ignition off timeout, after which DOUT is turned on.

Table 102. Immobilizer ignition off timeout configurable range.

Minimum value	Maximum value	Recommended value	Goes with (depends on) parameters	Value type
5	65353	30	**Immobilizer scenario (ID=1903)** **Immobilizer digital output control (ID=1904)** **iButtons list (ID=3500-3999)**	U8

8.6.19 iButton detect (ID=1907)

This parameter enables/disables iButton detect scenario. 0 – disable, 1 – enable.

Table 103. iButton detect configurable range.

Minimum value	Maximum value	Recommended value	Goes with (depends on) parameters	Value type
0	1	-	**iButton detection digital output control (ID=1908)**	U8

8.6.20 iButton detect digital output control (ID=1908)

This parameter defines digital output control on iButton detect scenario. 0 – disable, 1 – DOUT1, 2 – DOUT2.

Table 104. iButton detect digital output control configurable range.

Minimum value	Maximum value	Recommended value	Goes with (depends on) parameters	Value type
0	2	-	**iButton detect scenario (ID=1907)**	U8

8.6.21 Trip (ID=1280)

This parameter enables ability to detect START and STOP of the trip.

Table 105. Trip configurable range.

Minimum value	Maximum value	Recommended value	Goes with (depends on) parameters	Value type
0	1	-		U8

8.6.22 Start Speed (ID=1281)

This parameter represents speed, which is detected as minimum speed to indicate TRIP START and generate event.

Table 106. Start speed configurable range.

Minimum value	Maximum value	Recommended value	Goes with (depends on) parameters	Value type
0	255	-	**Trip (ID=1280)**	U8

8.6.23 Ignition Off Timeout (ID=1282)

This parameter represents timeout to wait if ignition is off in order to detect TRIP STOP and generate event.

Table 107. Ignition Off Timeout configurable range.

Minimum value	Maximum value	Recommended value	Goes with (depends on) parameters	Value type
0	65535	-	**Trip (ID=1280)**	U16

8.6.24 Trip Continuous distance counting (ID=1283)

For this feature I/O#11 Trip distance must be enabled. If I/O Trip distance is enabled, and Continuous distance counting variable is set to Continuous (value 1), TRIP distance is going to be counted continuously (from TRIP start to TRIP stop) and shown as I/O Trip distance value.

Table 108. Continuous distance counting configurable range.

Minimum value	Maximum value	Recommended value	Goes with (depends on) parameters	Value type
0	1	-	**Trip (ID=1280)** **I/O#11 – Trip distance(ID = 1410-1415)**	U8

8.6.25 Remember iButton ID (ID=1284)

This parameter enables/disables Remember iButton ID functionality. 0 – disable, 1 – enable.

Table 109. Remember iButton configurable range.

Minimum value	Maximum value	Recommended value	Goes with (depends on) parameters	Value type
0	1	-	**Trip (ID=1280)** **iButton List (ID=3500-3999)**	U8

8.6.26 Odometer value (ID=1285)

This parameter represents start odometer value.

Table 110. Odometer value configurable range.

Minimum value	Maximum value	Recommended value	Goes with (depends on) parameters	Value type
0	-	-	I/O#27 – Total distance (ID=1130-1135)	U8

8.6.27 Geofencing

In this chapter it is explained how to get all parameters for the first Geofence zone (all ID numbers are for the 1st zone). And at the end of the chapter (part 8.6.10) is presented a table with the IDs of all the rest Geofence zones.

8.6.27.1 Frame border (ID=1020)

Geofence border thickness, measured in meters.

Table 111. Frame border configurable range.

Minimum value	Maximum value	Recommended value	Goes with (depends on) parameters	Value type
0	1000000	1000	**All Geofencing parameters**	U32

8.6.27.2 Geofence Zone #1 Shape (ID=1030)

Geofence shape parameter can be: circle – value 0; rectangle – value 1.

Table 112. *Geofence Zone #1 Shape* configurable range.

Minimum value	Maximum value	Recommended value	Goes with (depends on) parameters	Value type
0	1	-	**All Geofencing parameters**	U8

8.6.27.3 Geofence Zone #1 Priority (ID=1031)

Parameter defines Geofence priority: 0 is low, 1 – high, 2 – panic;

Table 113. *Geofence Zone #1 Priority* configurable range.

Minimum value	Maximum value	Recommended value	Goes with (depends on) parameters	Value type
0	2	-	**All Geofencing parameters**	U8

8.6.27.4 Geofence Zone #1 Generate Event (ID=1032)

Generate event on:

a) No event – value 0

b) On entering zone – value 1;

c) On exiting zone – value 2;

d) On both – value 3;

Table 114. *Geofence Zone #1 Generate Event* configurable range.

Minimum value	Maximum value	Recommended value	Goes with (depends on) parameters	Value type
0	3	-	**All Geofencing parameters**	U8

8.6.27.5 Geofence Zone #1 Longitude (X1) (ID=1033)

Parameter has two meanings dependent on zone shape. If shape is a rectangle, then ID=10333 is left down corner X coordinate. If shape is a circle, then ID=1033 is center of that circle X coordinate.

Sample value: 25.30528

Table 115. *Geofence Zone #1 Longitude (X1)* configurable range.

Minimum value	Maximum value	Recommended value	Goes with (depends on) parameters	Value type
-180	180	-	**All Geofencing parameters**	Float

8.6.27.6 Geofence Zone #1 Latitude (Y1) (ID=1034)

Parameter has two meanings dependent on zone shape. If shape is a rectangle, then ID=1034 is left down corner Y coordinate. If shape is a circle, then ID=1034 is center of that circle Y coordinate.

Table 116. *Geofence Zone #1 Latitude (Y1)* configurable range.

Minimum value	Maximum value	Recommended value	Goes with (depends on) parameters	Value type
-90	90	-	**All Geofencing parameters**	Float

8.6.27.7 Geofence Zone #1 Longitude (X2) (ID=1035)

Parameter has two meanings depending on zone shape. If shape is a rectangle, then ID=1035 is right upper corner X coordinate. If shape is a circle, then ID=1035 is radius of circle with center of ID=1033 and ID=1034.

For rectangle:

Table 117. *Geofence Zone #1 Longitude (X2)* configurable range.

Minimum value	Maximum value	Recommended value	Goes with (depends on) parameters	Value type
-180	180	-	**All Geofencing parameters**	Float

For circle:

Table 118. *Geofence Zone Radius* configurable range.

Minimum value	Maximum value	Recommended value	Goes with (depends on) parameters	Value type
0	1000000	1000	**All Geofencing parameters**	Float

8.6.27.8 Geofence Zone #1 Latitude (Y2) (ID=1036)

If shape is rectangular, then ID=1036 is right upper corner Y coordinate. If shape circle, ID=1036 is not used.

Table 119. Geofence Zone #1 Latitude (Y2) configurable range.

Minimum value	Maximum value	Recommended value	Goes with (depends on) parameters	Value type
-90	90	-	**All Geofencing parameters**	Float

Other 4 GeoFence zone's parameters have the same logic as shown in GeoFence Zone #1.

Table 120. Geofence zone's configuration parameter ID.

GeoFence Zone Number	Geofence Zone's parameters
1	1030-1036
2	1040-1046
3	1050-1056
4	1060-1066
5	1070-1076

8.6.28 AutoGeofencing

8.6.28.1 Enable/Disable (ID=1101)

Enable – value 1; disable – value 0;

Table 121. AutoGeofencing configurable range.

Minimum value	Maximum value	Recommended value	Goes with (depends on) parameters	Value type
0	1	1		U8

8.6.28.2 Activation Timeout (ID=1102)

Parameter represents AutoGeofencing activation timeout in seconds.

Table 122. *Activation Timeout* configurable range.

Minimum value	Maximum value	Recommended value	Goes with (depends on) parameters	Value type
0	65535	60	**Enable/Disable (ID=1101)**	U16

8.6.28.3 Deactivate by (ID=1100)

Parameter defines Autogeofence deactivation source. Value 1 is dedicated for attached iButton, value 0 – for Ignition.

Table 123. *Deactivate by* configurable range.

Minimum value	Maximum value	Recommended value	Goes with (depends on) parameters	Value type
0	1	-	**Enable/ Disable (ID=1101)** **iButton List (ID=3500-3999)**	U8

8.6.28.4 AutoGeofence event Priority (ID=1103)

Parameter defines AutoGeofence event priority: 0 is low, 1 – high;

Table 124. *AutoGeofence event Priority* configurable range.

Minimum value	Maximum value	Recommended value	Goes with (depends on) parameters	Value type
0	1	1	**Enable/Disable (ID=1101)** **AutoGeofence event generating (ID=1104)**	U8

8.6.28.5 AutoGeofence event generating (ID=1104)

Generate event: 0 – no event, 1 – on entering zone; 2 – on exiting zone; 3 – on both;

Table 125. *AutoGeofence event generating* configurable range.

Minimum value	Maximum value	Recommended value	Goes with (depends on) parameters	Value type
0	3	2	**Enable/Disable (ID=1101)** **AutoGeofence event Priority (ID=1103)**	U8

8.6.28.6 Radius (ID=1105)

Parameter represents radius of circle with center device coordinates after activating AutoGeofence feature.

Table 126. *AutoGeofence Radius* configurable range.

Minimum value	Maximum value	Recommended value	Goes with (depends on) parameters	Value type
0	1000000	100	**Enable/Disable (ID=1101)** **Deactivate by** *(ID=1100)*	U32

8.6.29 iButton List (ID=3500-3999)

Read 5.4.4.

Table 127. iButton List configurable range.

Minimum value	Maximum value	Recommended value	Goes with (depends on) parameters	Value type
0	FFFFFFFF FFFFFFFF	-	**Immobilizer scenario (ID=1903)** **iButtons list checking (ID=1905)**	U64

8.7 I/O parameters

I/O properties are additional data sources which are recorded along with usual GPS data.

8.7.1 I/O#1 property parameter (ID=1300)

Parameter defines I/O property value. Possible values: enabled (1), disabled (0).

Table 128. I/O#1 property parameter configurable range.

Minimum value	Maximum value	Recommended value	Goes with (depends on) parameters	Value type
0	1	-	**I/O#1 priority (ID=1301)** **I/O#1 High level (ID=1302)** **I/O#1 Low level (ID=1303)** **I/O#1 logic operand (ID=1304)** **I/O#1 averaging length (ID=1305)**	S8

8.7.2 I/O#1 priority (ID=1301)

Parameter defines I/O property type of priority: 0 is low, 1 – high, 2 – panic.

Table 129. I/O#1 priority configurable range.

Minimum value	Maximum value	Recommended value	Goes with (depends on) parameters	Value type
0	2	0	**I/O#1 property parameter (ID=1300)** **I/O#1 High level (ID=1302)** **I/O#1 Low level (ID=1303)** **I/O#1 logic operand (ID=1304)** **I/O#1 averaging length (ID=1305)**	S8

8.7.3 I/O#1 High level (ID=1302)

Parameter defines high value of triggered I/O property. This parameter is used to set thresholds for I/O properties to generate events.

Table 130. I/O#1 High level configurable range.

Minimum value	Maximum value	Recommended value	Goes with (depends on) parameters	Value type
-2147483647	2147483647	1	**I/O#1 property parameter (ID=1300)** **I/O#1 priority (ID=1301)** **I/O#1 Low level (ID=1303)** **I/O#1 logic operand (ID=1304)** **I/O#1 averaging length (ID=1305)**	S32

8.7.4 I/O#1 Low level (ID=1303)

Parameter defines low value of triggered I/O property. This parameter is used to set thresholds for I/O properties to generate events.

Table 131. I/O#1 Low level configurable range.

Minimum value	Maximum value	Recommended value	Goes with (depends on) parameters	Value type
-2147483647	2147483647	0	**I/O#1 property parameter (ID=1300)** **I/O#1 priority (ID=1301)** **I/O#1 High level (ID=1302)** **I/O#1 logic operand (ID=1304)** **I/O#1 averaging length (ID=1305)**	S32

8.7.5 I/O#1 logic operand (ID=1304)

Parameter defines when event is sent: 0 – on range exit, 1 – on range entrance, 2 – both, 3 – monitoring, 4 – hysteresis, 5 – on changes.

Table 132. I/O#1 logic operand configurable range.

Minimal value	Maximum value	Recommended value	Goes with (depends on) parameters	Value type
0	4	3	**I/O#1 property parameter (ID=1300)** **I/O#1 priority (ID=1301)** **I/O#1 High level (ID=1302)** **I/O#1 Low level (ID=1303)** **I/O#1 averaging length (ID=1305)**	S8

8.7.6 I/O#1 averaging length (ID=1305)

Parameter defines I/O property sample length to average. If no averaging needed default value is 1.

Table 133. I/O#1 averaging length configurable range.

Minimum value	Maximum value	Recommended value	Goes with (depends on) parameters	Value type
0	2592000	1	**I/O#1 property parameter (ID=1300)** **I/O#1 priority (ID=1301)** **I/O#1 High level (ID=1302)** **I/O#1 Low level (ID=1303)** **I/O#1 logic operand (ID=1304)**	S32

Other I/O property elements can be configured in same logic. All I/O element parameters are listed on the following page.

Table 134. I/O elements parameters.

I/O Element Number	I/O element parameters
Digital Input 1	1300-1305
Digital Input 2	1310-1315
Digital Input 3	1320-1325
Analog Input 1	1330-1335
Digital Output 1	1340-1345
Digital Output 2	1350-1355
GNSS PDOP	1360-1365
GNSS HDOP	1370-1375
External Voltage	1380-1385
GNSS Power	1390-1395
Movement Sensor	1400-1405
Trip distance	1410-1415
GSM Operator	1420-1425
Speed (Km/h)	1430-1435
iButton ID	1440-1445
Mode	1450-1455
GSM Signal	1460-1465
Deep Sleep	1470-1475
Cell ID	1480-1485
Area Code	1490-1495
Dallas Temperature 1	1500-1505
Reserved	1510-1515
Reserved	1520-1525
Battery Voltage	1530-1535
Battery Charging Current	1110-1115
Ignition	1120-1125
Total Distance	1130-1135
Reserved IO1	1140-1145
Reserved IO2	1150-1155
RFID	1160-1165
LLS Fuel1	1720- 1725
LLS Temp1	1730- 1735
LLS Fuel2	1740- 1745
LLS Temp2	1750- 1755
LLS Fuel3	1760- 1765
LLS Temp3	1770- 1775
LLS Fuel4	1780- 1785
LLS Temp4	1790- 1795
LLS Fuel5	1800- 1805
LLS Temp5	1810- 1815
Dallas Temperature 2	1820- 1825
Dallas Temperature 3	1830- 1835
Dallas Temperature 4	1840- 1845
Dallas Temperature ID 1	1850- 1855
Dallas Temperature ID 2	1860- 1865

Dallas Temperature ID 3	1870- 1875
Dallas Temperature ID 4	1880- 1885

8.7.7 I/O#2 exception for a Digital input 3/Analog input option (ID=1320)

Parameter defines I/O property value. Possible values: disabled (0), Digital Input 3 enabled (1), Analog Input enabled (2).

Table 135. I/O#2 exception for a Digital input 3/Analog input option configurable range.

Minimum value	Maximum value	Recommended value	Goes with (depends on) parameters	Value type
0	2	-	**I/O#1 property parameter (ID=1300)** **I/O#1 priority (ID=1301)** **I/O#1 High level (ID=1302)** **I/O#1 Low level (ID=1303)** **I/O#1 logic operand (ID=1304)** **I/O#1 averaging length (ID=1305)**	S8

8.8 SMS event configuration

8.8.1 I/O#1 element SMS event configuration (ID=100)

Command sets SMS warning on I/O#1 element.

SMS Format: setparam X Y,W,Z
X – ID
Y – Enable/Disable (1/0)
W – Telephone number INDEX (See **8.4.13 SMS Event Predefined Numbers paragraph**, ID 150 – INDEX 0; ID151 – INDEX 1, …)
Z – SMS Text

Example: “setparam 100 1,5,Digital Input 1 Event!”

Other I/O element SMS events can be configured in same logic. All I/O element SMS event IDs are listed in the next table.

Table 136. I/O#1 element SMS event configuration ID.

Element name (default SMS Event Text)	ID
Digital input 1	100
Digital input 2	101
Digital input 3	102
Analog input1	103
Digital output 1	104
Digital output 2	105
GNSS PDOP	106
GNSS HDOP	107
External voltage	108
GNSS Status	109
Movement sensor	110

Trip distance	111
GSM operator code	112
Speed	113
iButton ID	114
Data mode	115
GSM signal	116
Deep Sleep	117
GSM Cell ID (CID)	118
GSM Location Area Code (LAC)	119
Dallas Temperature 1	120
Digital input 4	121
Analog input 2	122
Battery voltage	123
Battery current	124
Ignition	125
Total distance	126
Reserved for future use	127
Reserved for future use	128
Green Driving	137
Overspeeding	*138*
Jamming detection	139
Immobilizer	140
Trip	141
Geofence 1	142
Geofence 2	143
Geofence 3	144
Geofence 4	145
Geofence 5	146
AutoGeofence	147

9 MOUNTING RECOMMENDATIONS

9.1 Connecting Wires

- Wires should be connected while module is not plugged in.
- Wires should be fastened to the other wires or non-moving parts. Try to avoid heat emitting and moving objects near the wires.
- The connections should not be seen very clearly. If factory isolation was removed while connecting wires, it should be applied again.
- If the wires are placed in the exterior or in places where they can be damaged or exposed to heat, humidity, dirt, etc., additional isolation should be applied.
- Wires cannot be connected to the board computers or control units.

9.2 Connecting Power Source

- Be sure that after the car computer falls asleep, power is still available on chosen wire. Depending on car, this may happen in 5 to 30 minutes period.
- When module is connected, be sure to measure voltage again if it did not decrease.
- It is recommended to connect to the main power cable in the fuse box.
- Use 3A, 125V external fuse.

9.3 Connecting Ignition Wire

- Be sure to check if it is a real ignition wire – power does not disappear while starting the engine.
- Check if this is not an ACC wire (when key is in the first position, most electronics of the vehicle are available).
- Check if power is still available when you turn off any of vehicles devices.
- Ignition is connected to the ignition relay output. As alternative, any other relay, which has power output, when ignition is on, may be chosen.

9.4 Connecting Ground Wire

- Ground wire is connected to the vehicle frame or metal parts that are fixed to the frame.
- If the wire is fixed with the bolt, the loop must be connected to the end of the wire.
- For better contact scrub paint from the place where loop is connected.

PAY ATTENTION! Connecting the power supply must be carried out in a very low impedance point on-board vehicle network. These points in the car are the battery terminals. Therefore, we recommend connecting the power of FMA2YX (wire GND and POWER) directly to the battery terminals. Another valid option is to connect the wires to the main POWER cable inside the fuse box (if there is none, then to the power supply where the fuses of vehicle's computer are), wire GND must be connected in a special point, designed to connect GND vehicle computer. Connecting the GND at an arbitrary point to the mass of the car is unacceptable, as static and dynamic potentials on the line GND will be unpredictable, which can lead to unstable FMA2YX and even its failure.

10 FMA2YX installation instruction

FMA2YX is the device that has internal GNSS and GSM antenna.

Internal GNSS antenna device should be mounted with the sticker view to the open sky (metal free) with not less than ¾ of metal free area as shown in figure 55.

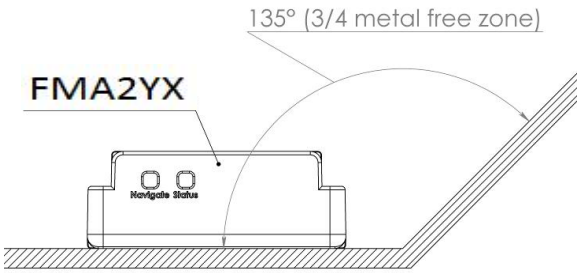

Figure 55. ¾ metal free zone illustration

FMA2YX has IP67 protection class. Top performance is reached if mounted outside of the vehicle.

The device has 4 mounting holes on the edges, and can be tightened with screws, adhesive tape or plastic straps.

FMA2YX area with sticker and GNSS antenna is shown in **Figure 56**.

Figure 56. FMA2YX view

10.1 Possible mounting zones

10.1.1 Trucks

It is strongly recommended to mount FMA2YX outside of the vehicle with the sticker direction to a sky, see figure 57.

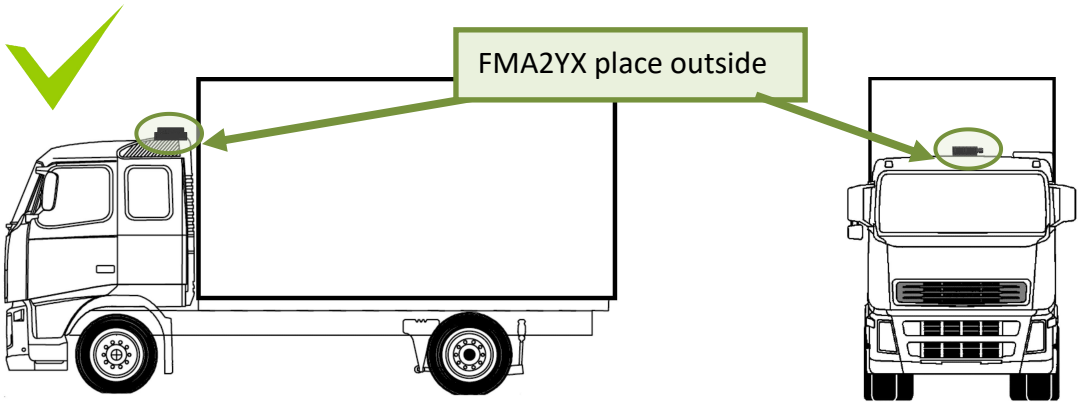

Figure 57. Possible mounting place on truck

Most commercial trucks have plastic hood in front of the vehicle.

It is recommended to mount FMA2YX under the hood. Power cord output of the device should be at the bottom. If it is not possible, if a front hood is made of some kind of metal, the device can be mounted inside the car on the front panel as close as possible to the front window. See Figure 58.

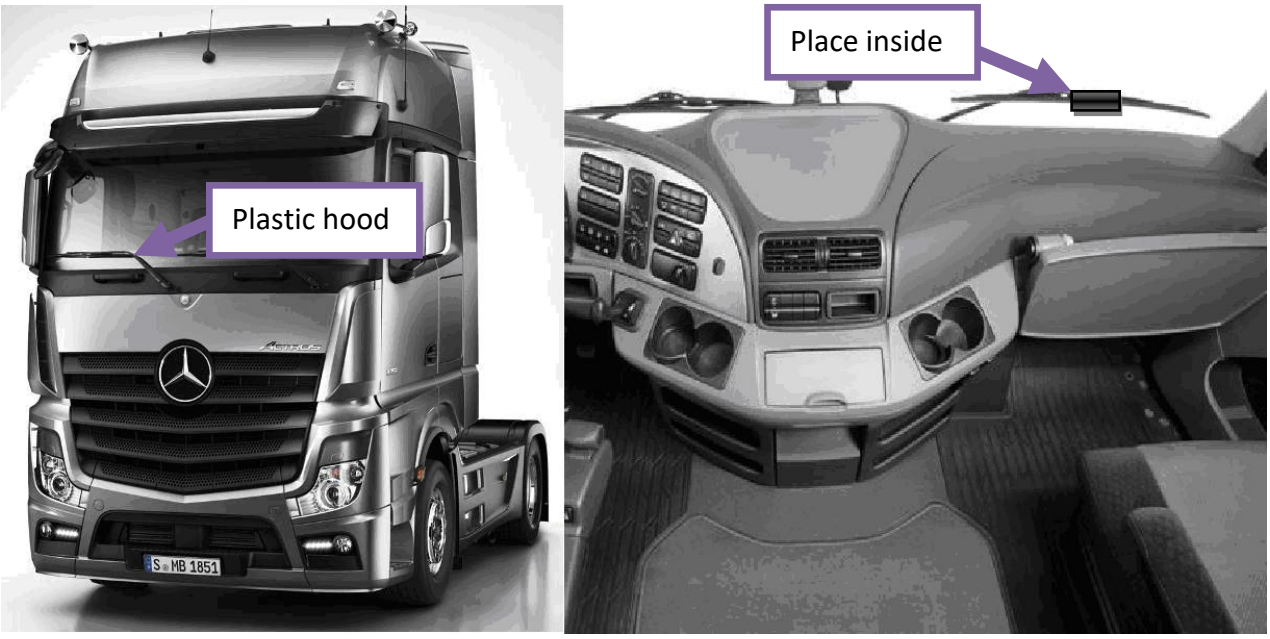

Figure 58. Possible mounting places in trucks

10.1.2 Tractors

It is strongly recommended to mount FMA2YX outside of the tractor with the sticker direction to a sky, see Figure 59.

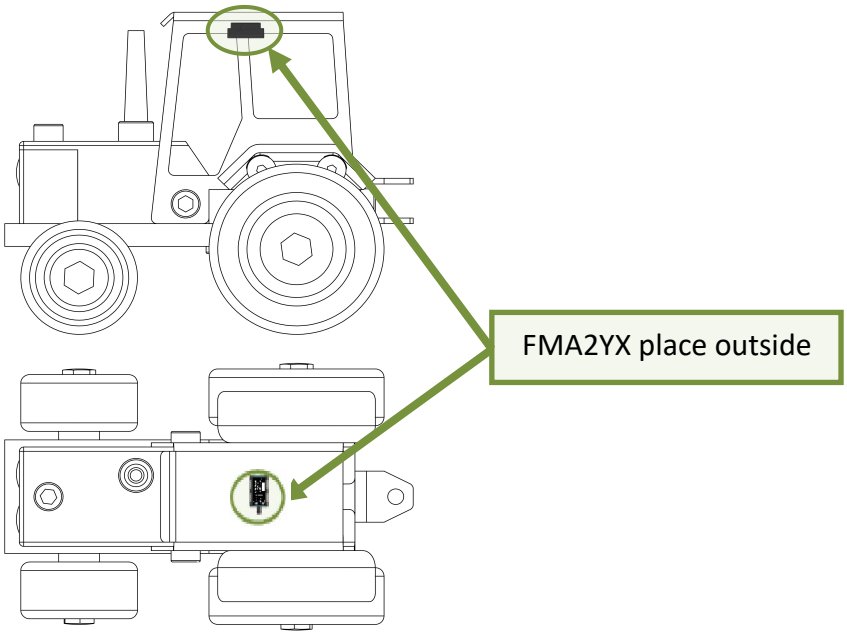

Figure 59. Possible mounting place on tractor

10.1.3 Motor bikes

Device should be mounted on outside

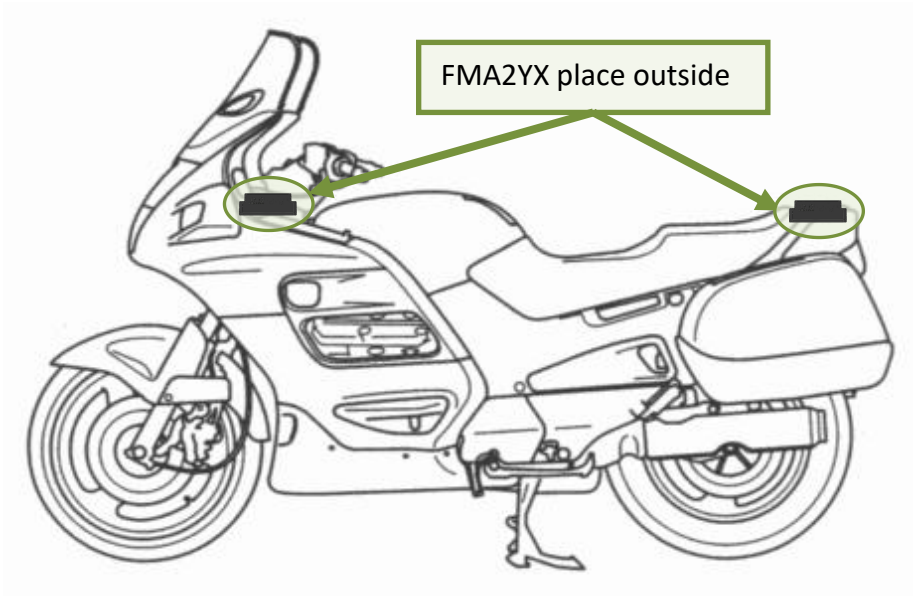

Figure 60. Possible mounting places for motorbikes

FMA2YX cannot be mounted under the seat!

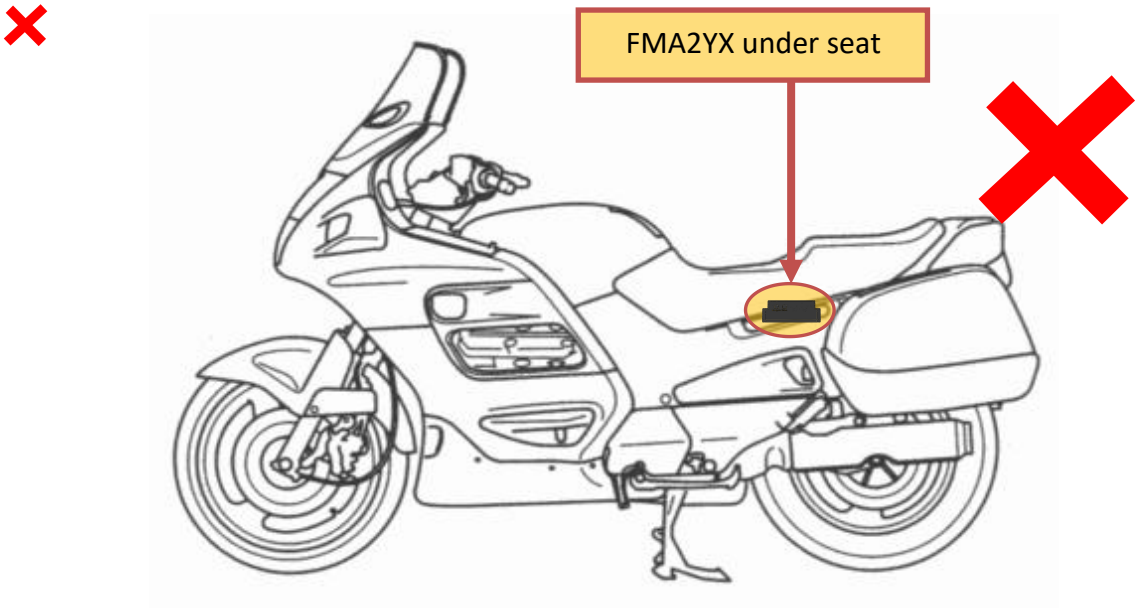

Figure 61. Not mount device under seat

10.1.4 Light vehicles

Most light vehicles has oblique front window that opens most part of interior front panel.

FMA2YX can be mounted under the plastic panel behind the front window, with the sticker direction to a window (sky). Look to Figure 62.

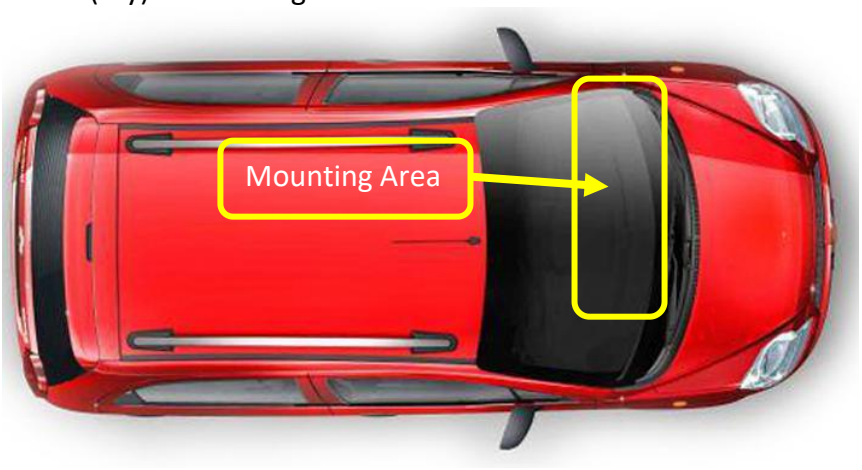

Figure 62. Light vehicle

10.1.5 Recommended mounting positions

1. Best FMA2YX mounting position is outside of vehicle with any metal above the device.

2. Recommended deviation from horizontal axis of vehicle max 3-5°, as shown in figure 63.

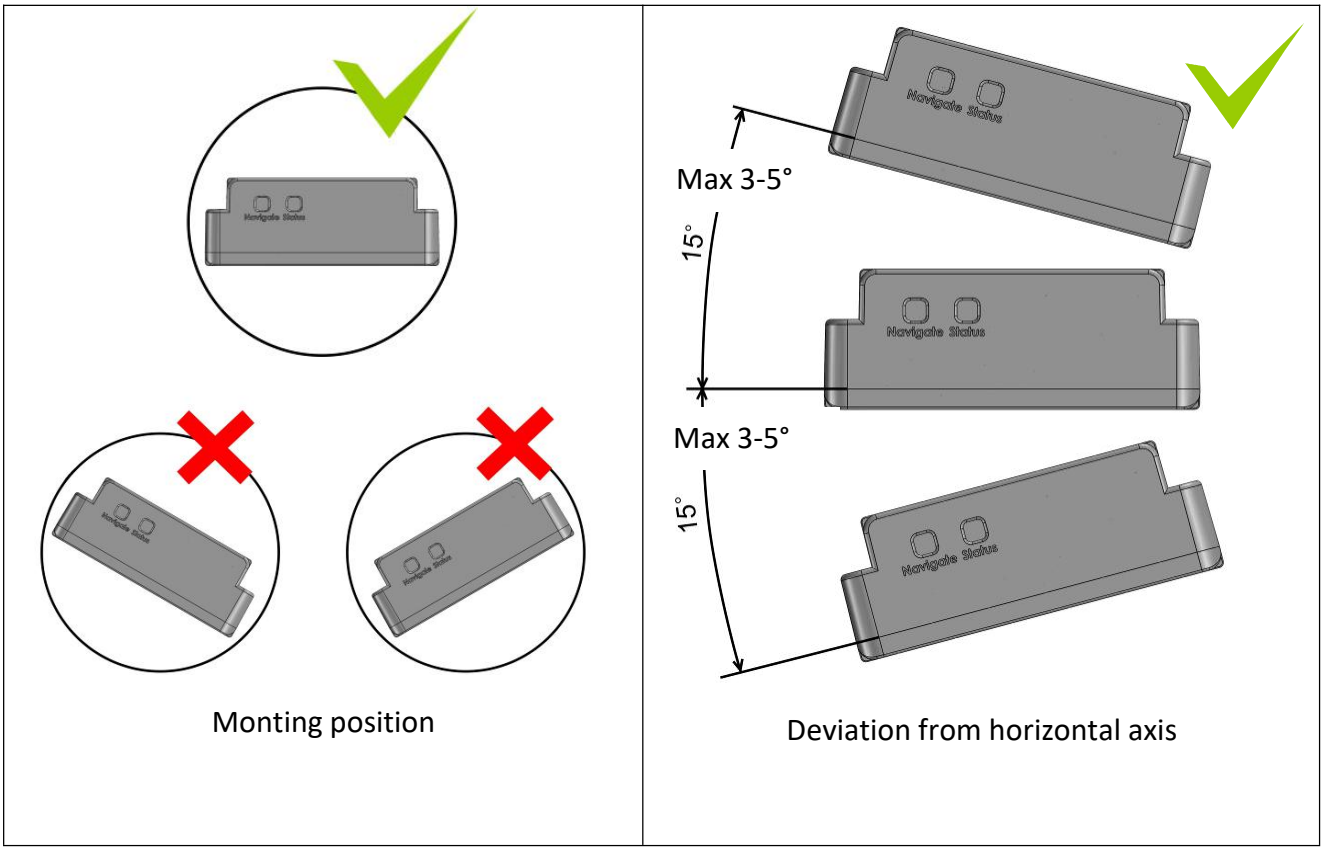

Figure 63. Mounting position and recommended deviation from horizontal axis of vehicle

Mounting position and recommended deviation from longitudinal axis of vehicle ±2°, as shown in figure 64.

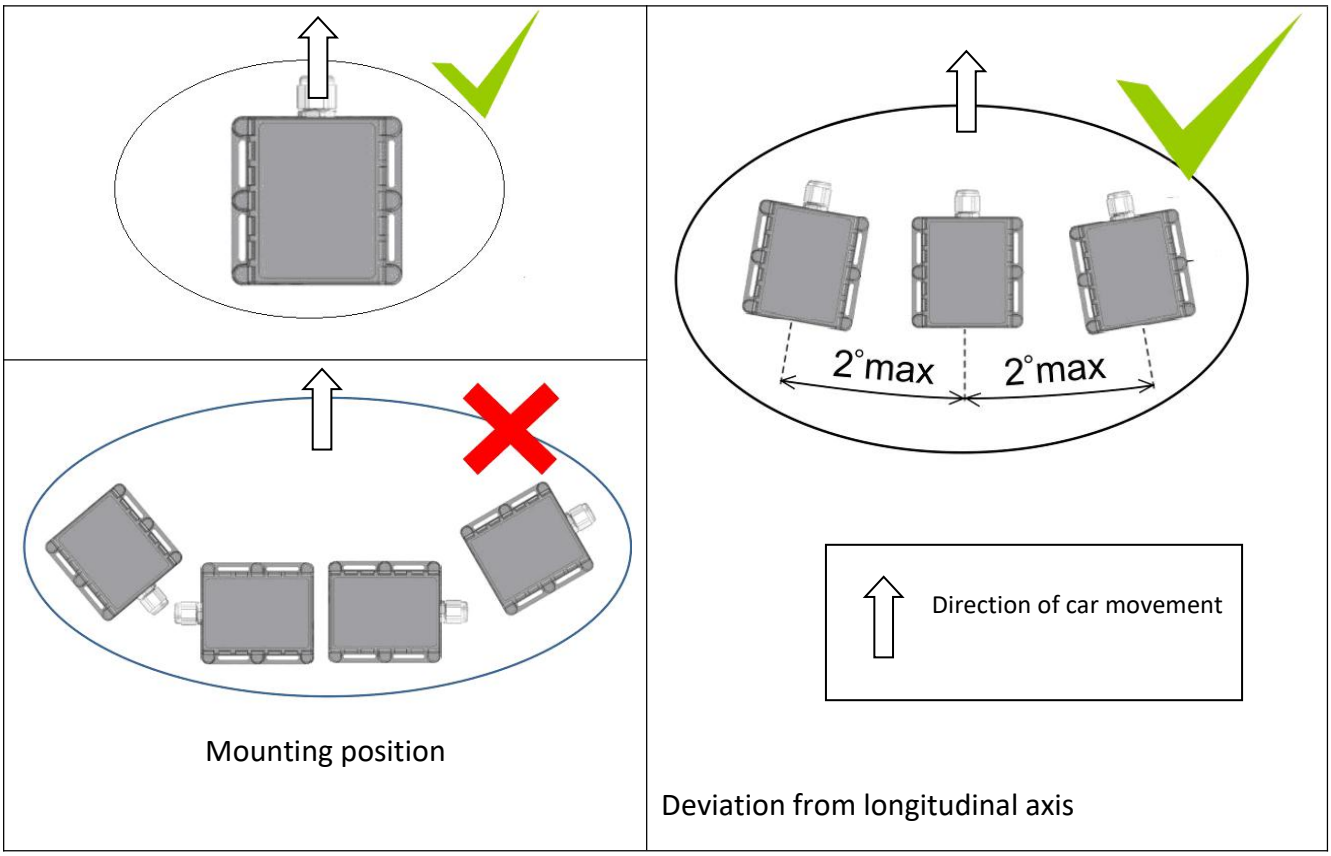

Figure 64. Mounting position and recommended deviation from longitudinal axies of vehicle

10.1.6 Restrictions

1. FMA2YX **device can not be mounted inside in the vehicle door!**

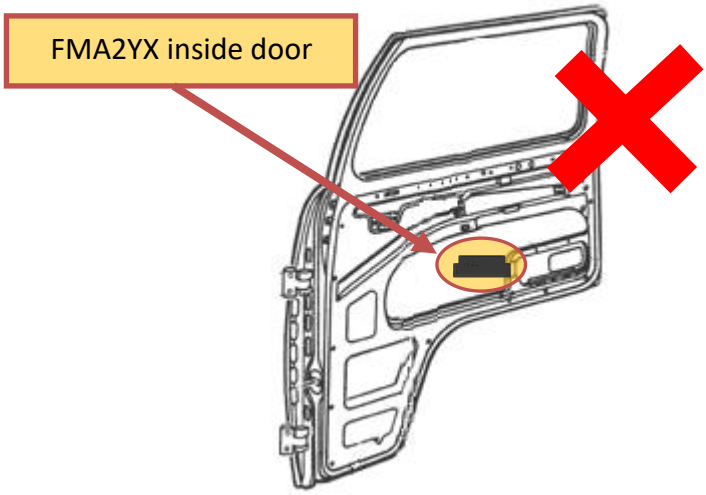

Figure 65. Not mounting FMA2YX device inside door of the car

2. FMA2YX **device cannot be mounted inside the vehicle!**

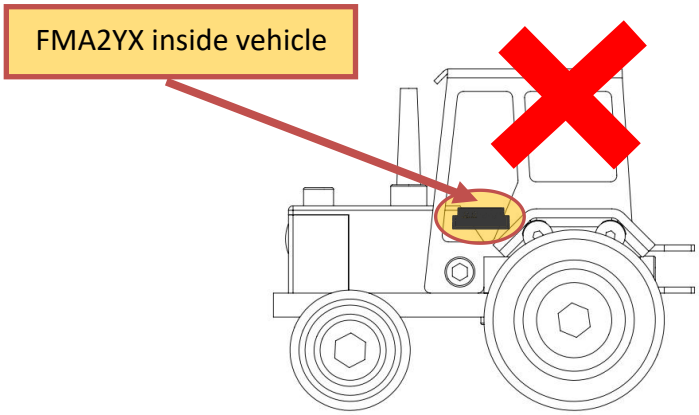

Figure 66. Not mount device inside the vehicle

10.1.7 Connecting power wires

1. Device should be connected directly to battery. Power supply: 6V/12V/24V.

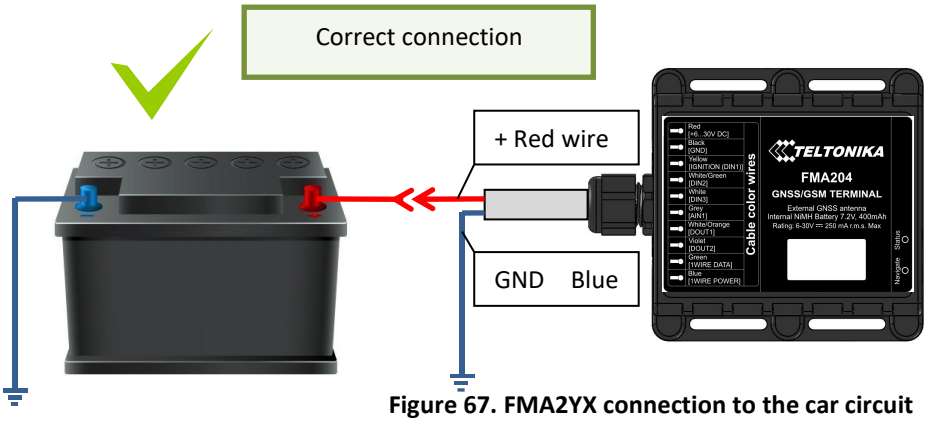

Figure 67. FMA2YX connection to the car circuit

2. Prohibits the use of the device disconnected from the vehicle circuit

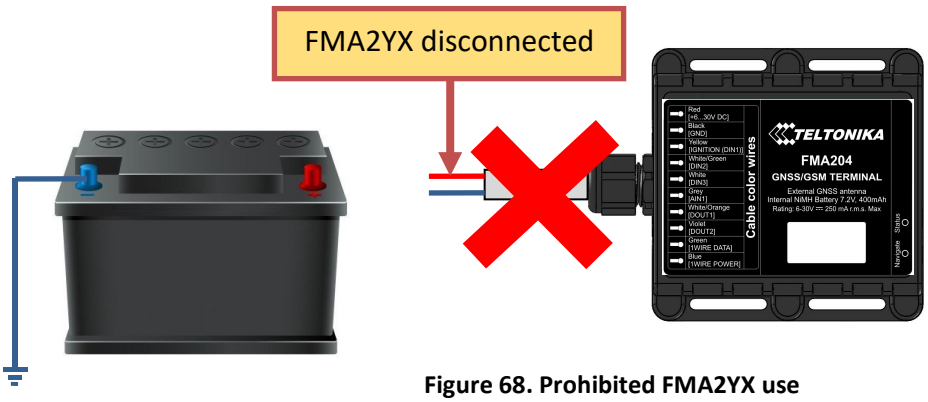

Figure 68. Prohibited FMA2YX use

3. If FMA2YX is used in 6V system and power cables are extended.

Extension cable resistance should be less than 60 mΩ in sum of both, positive and negative, wires. 30 mΩ for single wire.

10.1.8 Other recommendations

1. If using Eco driving function device should be mounted horizontally to work properly, see Figure 63 and 64.
2. If the vehicle is not used for a half of month or more it is recommended to disconnect FMA2YX to save vehicle battery.

11 Downloading log using “Hercules” application

1 STEP:

- set special chars – ASCII
- Set PORT and start listen (screen below)

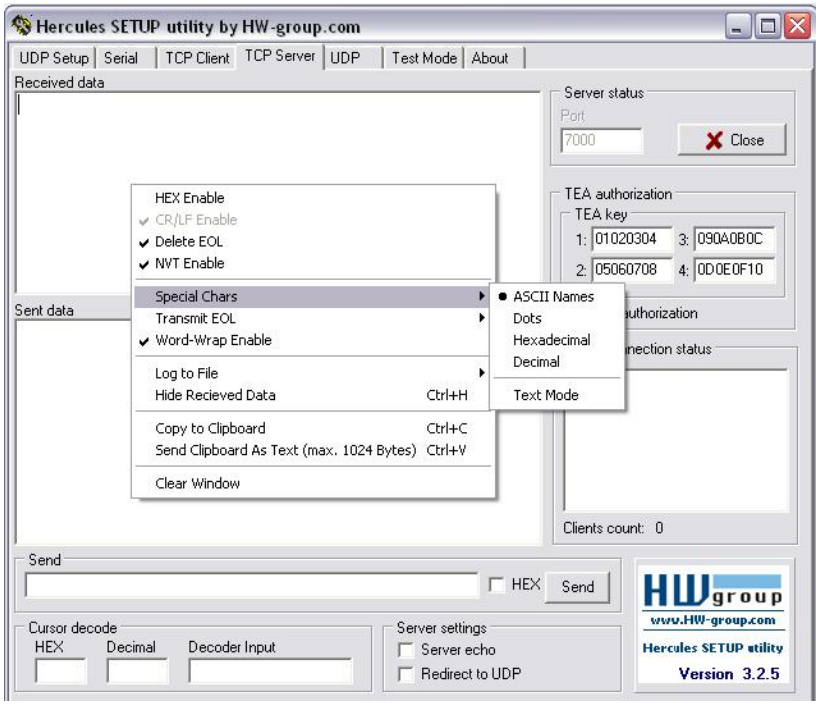

Figure 69. Set special characters to ASCII

2 STEP:

- Set directory for file download
- Enable “Log to file” as show below

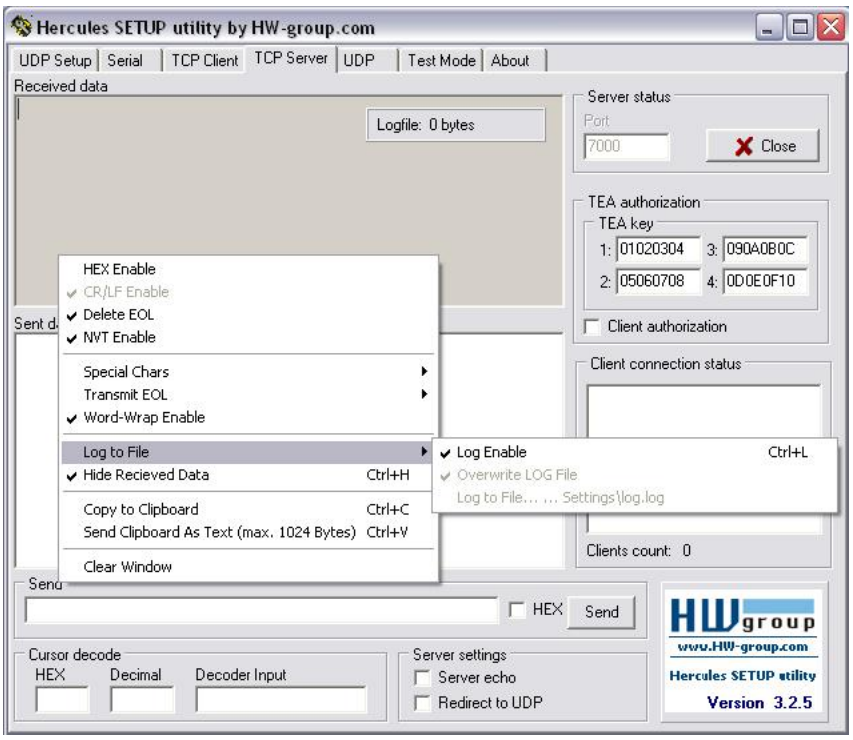

Figure 70. Enable logging with Hercules

3 STEP:
"Terminal" Command sending using Hercules

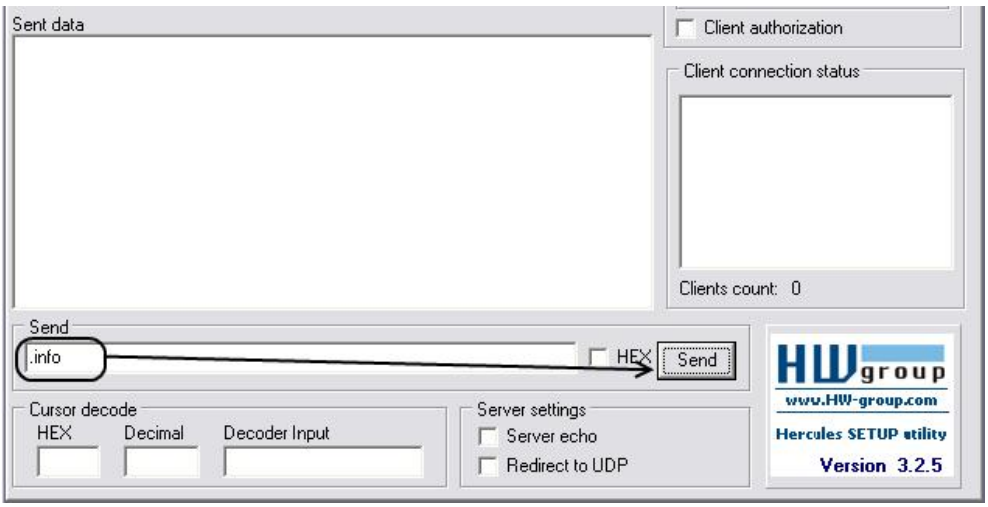

Figure 71. Send command with Hercules

12 CHANGE LOG

Nr.	Date	Version	Comments
1	2017.08.14	0.01	Draft Document created
2	2017.08.21	0.02	Minor changes
3	2017.10.03	0.03	Added SELV limited power source line. Added fuse recommendation line.
4	2017.10.31	0.04	Green driving source parameter added; Records Saving/Sending without time synchronization parameter description modified.