Testing Laboratory
1724

低功率射頻電機-DFS 測試報告

台灣索尼股份有限公司

器材名稱: Digital Media Player (內建無線裝置)

廠牌: SONY

型號: NW-ZX507

申請廠商 ： 台灣索尼股份有限公司
臺北市中山區長春路 145 號 5 樓

測試實驗室 ： 敦吉檢測科技股份有限公司電磁相容部
新北市林口區頂福里 53-11 號
電話: (02) 2609-9301~2, 2609-2133~5
傳真: (02) 2609-9309

受理日期 ： 2019 年 06 月 13 日
案件編號 ： C1M1906140
報告號碼 ： EM-NC190136
測試日期 ： 2019 年 07 月 03 日 ~ 04 日

TABLE OF CONTENTS

Description Page

低功率射頻電機-DFS 測試報告 1
SUMMARY OF TEST RESULT 3
1.GENERAL INFORMATION 7
1.1.EUT Information 7
1.2.Support Equipment 7
1.3.Descriptions of Key Components 8
1.4.Standard Requirement 8
1.5.Table for DFS band Carrier Frequencies 8
1.6.Antenna Information of DFS Band 8
1.7.Measurement Uncertainty 9
2.TEST EQUIPMENT 10
3.WORKING MODES AND REQUIREMENT TEST ITEM 11
3.1.Applicability of DFS Requirements Prior To Use A Channel 11
3.2.Applicability of DFS Requirements During Normal Operation 11
4.DFS DETECTION THRESHOLD AND RADAR TEST WAVEFORMS 12
4.1.Interference Threshold Value, Master or Client Incorporating In-Service Monitoring 12
4.2.Radar Test Waveform Minimum Step 12
4.3.Short Pulse Radar Test Waveforms 13
4.4.Long Pulse Radar Test Waveforms 14
4.5.Frequency Hopping Pulse Radar Test Waveforms 16
4.6.Radiated Calibration Setup 18
4.7.Calibration Deviation 18
4.8.Radar Waveform Calibration Result 19
5.TEST SETUP AND TEST RESULT 20
5.1.Test Setup 20
5.2.Channel Move Time, Channel Closing Transmission Time, Non-Occupancy Period, Non-Associated Client Beacon Measurement 22
6.USER ACCESS RESTRICTION 24
附錄一 受測裝置之測試結果
附錄二 受測裝置之測試照片
附錄三 受測裝置之產品照片

低功率射頻電機測試報告

受理日期	：	2019年06月13日
完成日期	：	2019年08月06日
報告號碼	：	EM-NC190136
實驗室名稱	：	敦吉檢測科技股份有限公司電磁相容部
實驗室地址	：	新北市林口區頂福里53-11號
實驗室電話	：	(02) 2609-9301, (02) 2609-2133
認可編號及範圍	：	TAF 1724 (9KHz ~ 40GHz)
申請廠商	：	台灣索尼股份有限公司
製造廠商	：	Sony Corporation
器材名稱	：	Digital Media Player (內建無線裝置)
廠牌	：	SONY
型號	：	NW-ZX507

工作頻率/發射功率/場強 ：

無線技術	工作頻率(MHz)		頻道數	發射功率/場強	
				峰值 (Peak)	平均值 (Average)
BT	GFSK	2402-2480	79	4.89 dBm	---
	8DPSK	2402-2480		6.66 dBm	---
BLE	2402-2480		40	4.44 dBm	---
802.11b	2412-2472		13	17.83 dBm	15.34 dBm
802.11g	2412-2472		13	22.81 dBm	17.56 dBm
802.11n-HT20	2412-2472		13	22.98 dBm	17.35 dBm
802.11a	UNII Band I	5180-5240	4	---	13.03 dBm
	UNII Band II	5260-5320	4	---	13.31 dBm
	UNII Band III	5500-5700	11	---	14.75 dBm
	UNII Band IV	5745-5825	5	---	14.58 dBm
802.11n-HT20/ 802.11ac-VHT20	UNII Band I	5180-5240	4	---	12.69 dBm
	UNII Band II	5260-5320	4	---	13.04 dBm
	UNII Band III	5500-5700	11	---	14.39 dBm
	UNII Band IV	5745-5825	5	---	14.31 dBm
802.11n-HT40/ 802.11ac-VHT40	UNII Band I	5190-5230	2	---	11.24 dBm
	UNII Band II	5270-5310	2	---	11.49 dBm
	UNII Band III	5510-5670	5	---	12.75 dBm
	UNII Band IV	5755-5795	2	---	13.61 dBm
802.11ac-VHT80	UNII Band I	5210	1	---	10.49 dBm
	UNII Band II	5290	1	---	10.23 dBm
	UNII Band III	5530-5610	2	---	11.62 dBm
	UNII Band IV	5775	1	---	11.91 dBm
NFC (主動式)	13.56		1	3m: 40.90 dBμV/m	
				30m: 0.90 dBμV/m	
****UNII Band II & III [DFS Function-Slave (Without radar detection function)]****					

調變方式 ：

無線技術	調變方式
BT	FHSS (GFSK, 8DPSK, π/4 DQPSK)
BLE	GFSK
802.11b	DSSS (DBPSK/ DQPSK/ CCK)
802.11a/g/n-HT20/n-HT40	OFDM (BPSK/ QPSK/ 16QAM/ 64QAM)
802.11ac-VHT20/VHT40/VHT80	OFDM (BPSK/ QPSK/ 16QAM/ 64QAM/ 256QAM)
NFC (主動式)	ASK

天線規格　　：　此裝置使用固定式天線，其天線資料如下:

天線類型	製造商	型號	頻率(MHz)	天線增益(dBi)
Inverted F (BT/WLAN)	Shanghai Amphenol Airwave Communication Electronics Co., Ltd	SNA556-16-000-C	2402-2480	2.4
			5180-5825	3.0
Loop (NFC)	Wistron Neweb Corp.	XYBD-SN1	---	---
註:天線已符合NCC低功率射頻電機技術規範2.2.節之規定				

備註：1.本試驗符合性判定之決定規則不另外考慮量測不確定度。
2.本測試報告僅對受測之樣品負責。
3. 非經本公司同意，測試報告不得摘錄複印使用。(全部複製除外)
4. 本產品所適用之規範修訂日期 2018 年 01 月 10 日。
5. 此份報告是針對 UNII Band II、III 之 DFS 功能進行製作，
至於 2.4GHz 及 BLE 功能報告於報告號碼(EM-NC190133)，
至於 Bluetooth 功能於報告號碼(EM-NC190134)，
至於 UNII Band I、II、III、IV 功能於報告號碼(EM-NC190135)，
至於 NFC 功能於報告號碼(EM-NC190137)。

SUMMARY OF TEST RESULT

Description of Test Item	Standard	Results
Channel Availability Check Time	NCC LP0002-Section 4.7.7.2 (2)(A)	N/A
Channel Move Time	NCC LP0002-Section 4.7.7.2 (4)	PASS
Channel Closing Transmission Time	NCC LP0002-Section 4.7.7.2 (4)	PASS
Non-Occupancy Period	NCC LP0002-Section 4.7.7.2 (5)	PASS

報告簽署人：薛舜誠 2019.08.13
(薛舜誠/課長)

審查人員：吳俊澤 2019.8/13
(吳俊澤/主任)

1. GENERAL INFORMATION

1.1. EUT Information

Product	Digital Media Player（內建無線裝置）
Model Number	NW-ZX507
Brand Name	SONY
Modulation	**802.11a/n-HT20:** OFDM (BPSK/ QPSK/ 16QAM/ 64QAM)
	802.11ac-VHT20/VHT40/VHT80: OFDM (BPSK/ QPSK/ 16QAM/ 64QAM/ 256QAM)
Operating Frequency Range	**802.11a/n-HT20/802.11ac-VHT20:** UNII Band II (5260-5320MHz) UNII Band III (5500-5700MHz)
	802.11n-HT40/802.11ac-VHT40: UNII Band II (5270-5310MHz) UNII Band III (5510-5670MHz)
	802.11ac-VHT80: UNII Band II (5290MHz) UNII Band III (5530-5610MHz)
Channel Bandwidth	20MHz/40MHz/80MHz
DFS Function	Slave (without radar detection function)
Max Con. Power (DFS Band Max.)	**802.11a:** **UNII Band II:** 13.31dBm **UNII Band III:** 14.75dBm
	802.11n-HT20: **UNII Band II:** 13.04dBm **UNII Band III:** 14.39dBm
	802.11n-HT40: **UNII Band II:** 11.47dBm **UNII Band III:** 12.75dBm
	802.11ac-VHT80: **UNII Band II:** 10.23dBm **UNII Band III:** 10.84dBm
	註：本報告以功率較大之模式802.11a進行Bandwidth 20MHz量測。

1.2. Support Equipment

Item	Manufacturer	Model	Remark
AP Server embedded with Wireless AC Module			
AP Server	D-LINK	DIR-868L	FCC ID: KA2IR868LA1
Wireless AC Module	Aplpha	WMC-AC01	FCC ID: RRK2012060056-1

1.3. Descriptions of Key Components

None

1.4. Standard Requirement

NCC LP0002 (2016-08) 4.7.7.2: U-NII devices operating in the 5.25 ~ 5.35 GHz and 5.47 ~ 5.725 GHz band shall employ a TPC mechanism. The U-NII device is required to have the capability to operate at least 6 dB below the mean EIRP value of 30dBm. A TPC mechanism is not required for systems with an e.i.r.p. of less than 500mW.

U-NII devices operating in the 5.25-5.35 GHz and 5.47-5.725 GHz bands shall employ a DFS radar detection mechanism to detect the presence of radar systems and to avoid co-channel operation with radar systems. EUT is Client device without radar detection function.

1.5. Table for DFS band Carrier Frequencies

Frequency Band	802.11a, 802.11n-HT20, 802.11ac-VHT20		802.11n-HT40, 802.11ac-VHT40		802.11ac-VHT80	
	Channel No.	Frequency (MHz)	Channel No.	Frequency (MHz)	Channel No.	Frequency (MHz)
5260-5320MHz UNII Band II	52	5260	54	5270	58	5290
	56	5280	62	5310		
	60	5300				
	64	5320				
Frequency Band	802.11a, 802.11n-HT20, 802.11ac-VHT20		802.11n-HT40, 802.11ac-VHT40		802.11ac-VHT80	
	Channel No.	Frequency (MHz)	Channel No.	Frequency (MHz)	Channel No.	Frequency (MHz)
5500-5720MHz UNII Band III	100	5500	102	5510	106	5530
	104	5520	110	5550	122	5610
	108	5540	118	5590		
	112	5560	134	5670		
	116	5580	134	5670		
	120	5600				
	124	5620				
	128	5640				
	132	5660				
	136	5680				
	140	5700				

1.6. Antenna Information of DFS Band

天線類型	製造商	型號	頻率(MHz)	天線增益(dBi)
Inverted F	Shanghai Amphenol Airwave Communication Electronics Co., Ltd	SNA556-16-000-C	5180-5825	3.0

1.7. Measurement Uncertainty

Test Item	Uncertainty
DFS Measurement	±0.5ms
Threshold	±0.33dB

2. TEST EQUIPMENT

Item	Type	Manufacturer	Model No.	Serial No.	Cal. Date	Cal. Interval
1	Vector Signal Generation	R&S	SMU200A	104893	2019. 06. 18	1 Year
2	Spectrum Analyzer	R&S	FSV30	101181	2018. 07. 12	1 Year
3	Double-Ridged Waveguide Horn	ETS-Lindgren	3117	00135902	2019. 03. 13	1 Year
4	Horn Antenna	COM-POWER	AH-840	101092	2019 .05. 14	1 Year
5	Digital Thermo-Hygro Meter	EVERY DAY	E-512	RF-02	2019. 04. 20	1 Year

3. WORKING MODES AND REQUIREMENT TEST ITEM

3.1. Applicability of DFS Requirements Prior To Use A Channel

Requirement	Operational Mode		
	Master	Client without radar detection	Client with radar detection
Non-Occupancy Period	✓	Not required	✓
DFS Detection Threshold	✓	Not required	✓
Channel Availability Check Time	✓	Not required	Not required
Uniform Spreading	✓	Not required	Not required

3.2. Applicability of DFS Requirements During Normal Operation

Requirement	Operational Mode		
	Master	Client without radar detection	Client with radar detection
DFS Detection Threshold	✓	Not required	✓
Channel Closing Transmission Time	✓	✓	✓
Channel Move Time	✓	✓	✓

4. DFS DETECTION THRESHOLD AND RADAR TEST WAVEFORMS

4.1. Interference Threshold Value, Master or Client Incorporating In-Service Monitoring

Maximum Transmit Power	Value (See Notes 1 and 2)
≥ 200 milliwatt	-64dBm
< 200 milliwatt	-62dBm
Note 1: This is the level at the input of the receiver assuming a 0 dBi receive antenna. Note 2: Throughout these test procedures an additional 1 dB has been added to the amplitude of the test transmission waveforms to account for variations in measurement equipment. This will ensure that the test signal is at or above the detection threshold level to trigger a DFS response.	

The radar Detection Threshold, lowest antenna gain is the parameter of interference radar DFS detection threshold.

The interference Detection Threshold is -62dBm

4.2. Radar Test Waveform Minimum Step

Step intervals of 0.1 microsecond for Pulse Width, 1 microsecond for PRI, 1MHz for chirp width and 1 for the number of pulses will be utilized for the random determination of specific test waveforms.

4.3. Short Pulse Radar Test Waveforms

Radar Type	Pulse Width (µsec)	PRI (µsec)	Number of Pulse	Minimum Percentage of Successful Detection	Minimum number of Trials
1	1	1428	18	60%	30
2	1-5	150-230	23-29	60%	30
3	6-10	200-500	16-18	60%	30
4	11-20	200-500	12-16	60%	30
Aggregate (Radar Types 1-4)				80%	120

A minimum of 30 unique waveforms are required for each of the short pulse radar type 2 through 4. For short pulse radar type 1, the same waveform is used a minimum of 30 times. If more than 30 waveforms are used for short pulse radar types 2 through 4, then each additional waveform must also be unique and not repeated from the previous waveforms. The aggregate is the average of the percentage of successful detections of short pulse radar types 1-4.

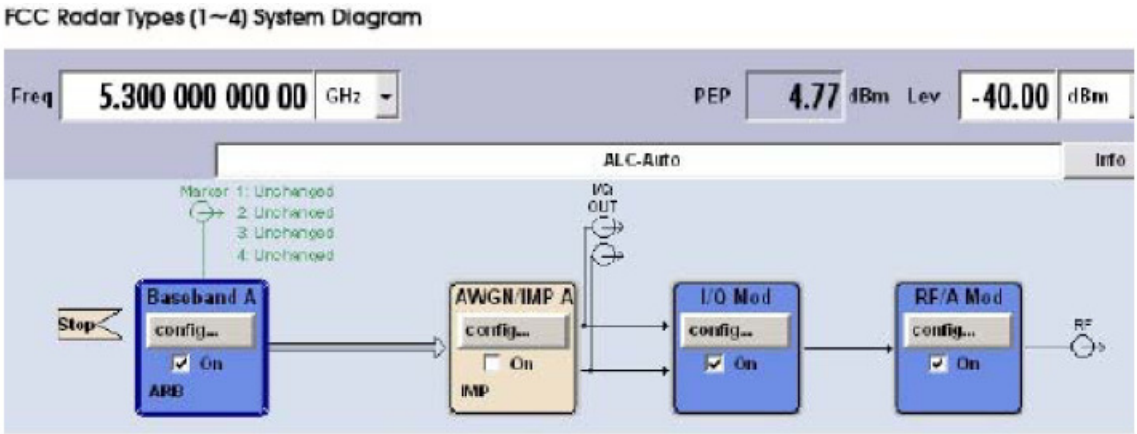

Used R&S SMU200A (Vector SG with two ARB)
B11: Base-band Generator with ARB (16M samples) and Digital Modulation
B13: Base-band Main Module
B106: frequency range (100 kHz to 6 GHz)
For selecting the waveform parameters from within the bounds of the signal type, system was random selection using uniform distribution.

4.4. Long Pulse Radar Test Waveforms

Radar Type	Pulse Width (µsec)	Chirp Width (MHz)	PRI (µsec)	Number of Pulse Per Burst	Number of Bursts	Minimum Percentage of Successful Detection	Minimum of Trials
5	50-100	5-20	1000-2000	1-3	8-20	80%	30

The parameters for this waveform are randomly chosen. Thirty unique waveforms are required for the Long Pulse radar test signal. If more 30 waveforms are used for the Long Pulse radar test signal, then each additional waveform must also be unique and not repeated from the previous waveforms. Each waveform is defined as following:

(1) The transmission period for the Long Pulse Radar test signal is 12 seconds.

(2) There are a total of 8 to 20 Bursts in the 12 second period, with the number of Bursts being randomly chosen. This number is Burst_Count.

(3) Each Burst consists of 1 to 3 pulses, with the number of pulses being randomly chosen. Each Burst within the 12 second sequence may have a different number of pulses.

(4) The pulse width is between 50 and 100 microseconds, with the pulse width being randomly chosen. Each pulse within a Burst will have the some pulse width. Pulses in different Bursts may have different pulse widths.

(5) If more than one pulse is present in a Burst, the time between the pulses will be between 1000 and 2000 microseconds, with the time being randomly chosen. If three pulses are present in a Burst, the time between the first and second pulses is chosen independently of the time between the second and third pulses.

(6) The 12 second transmission period is divided into even intervals. The number of intervals is equal to Burst_Count. Each interval is of length (12000000/Burst_Count) microseconds. Each interval contains one Burst. The start time for the Burst, relative to the beginning of the interval, is between 1 and [(12000000/Burst_Count)-(Total Burst length)+(One Random PRI interval)] microseconds, with the start time being randomly chosen. The step interval for the start time is 1 microsecond. The start time for each Burst is chosen independently.

A representative example of a Long Pulse radar test waveform:

(1) The total test signal length is 12 seconds.

(2) 8 Bursts are randomly generated for the Burst_Count.

(3) Burst 1 has 2 randomly generated pulses.

(4) The pulse width (for both pulses) is randomly selected to be 75 microseconds.

(5) The PRI is randomly selected to be at 1213 microseconds.

(6) Bursts 2 through 8 are generated using steps 3-5.

(7) Each Burst is contained in even intervals of 1500000 microseconds. The starting location for Pulse 1. Burst 1 is randomly generated (1 to 1500000 minus the total Burst 1 length + 1 random PRI interval) at the 325001 microsecond step. Bursts 2 through 8 randomly fall in successive 1500000 microsecond intervals (i.e. Burst 2 falls in the 1500001-3000000 microsecond range).

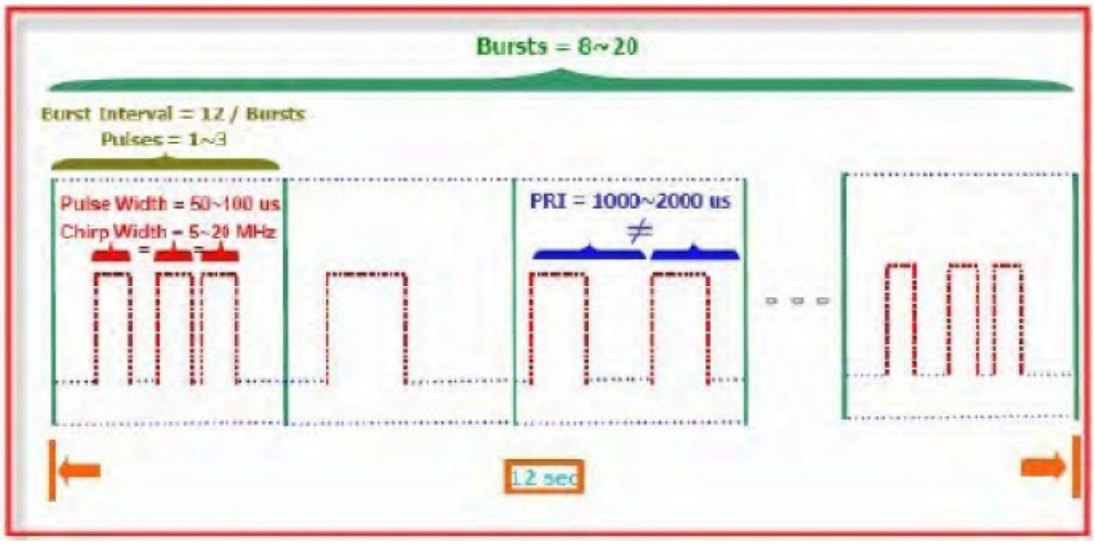

FCC Radar Types (5) System Diagram

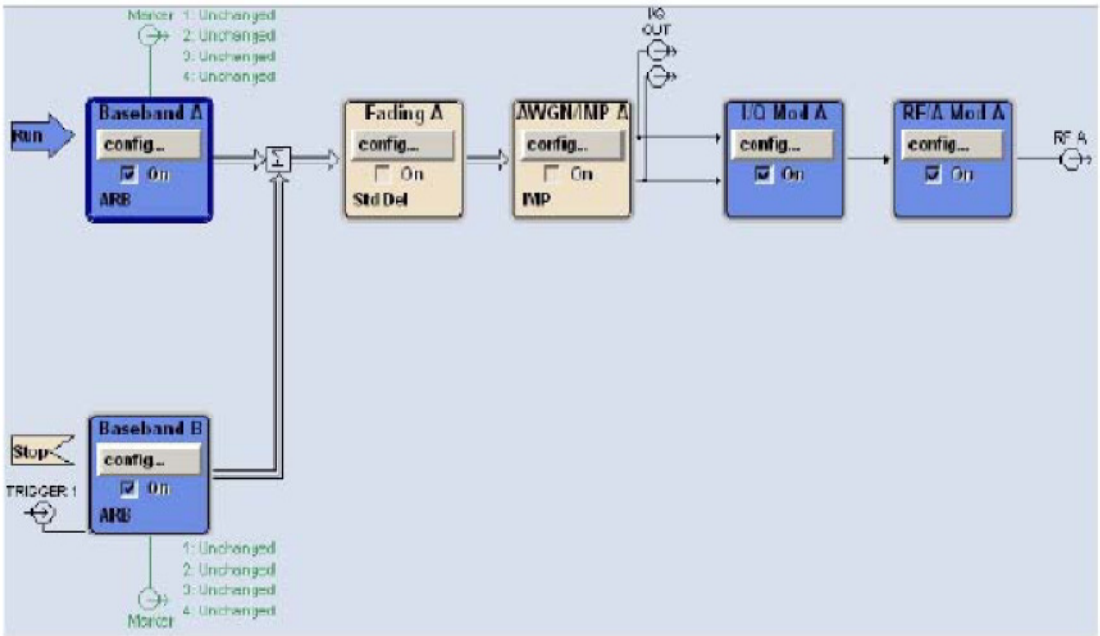

Used R&S SMU200A (Vector SG with two ARB)
Path A/Path B Two B11: Base-band Generator with ARB (16M samples) and Digital Modulation
B13: Base-band Main Module
B106: frequency range (100 kHz to 6 GHz)
For selecting the waveform parameters from within the bounds of the signal type, system was random selection using uniform distribution.

4.5. Frequency Hopping Pulse Radar Test Waveforms

Radar Type	Pulse Width (µsec)	PRI (µsec)	Pulses Per Hop	Hopping Rate (kHz)	Hopping Sequence Length (ms)	Minimum Percentage of Successful Detection	Minimum of Trials
6	1	333	9	0.333	300	70%	30

For the Frequency Hopping Radar Type, the same Burst parameters are used for each waveform. The hopping sequence is different for each waveform and a 100-length segment is selected from the hopping sequence defined by the following algorithm:

The first frequency in a hopping sequence is selected randomly from the group of 475 integer frequencies form 5250-5274MHz. Next, the frequency that was just chosen is removed from the group and a frequency is randomly selected from the remaining 474 frequencies in the group. This process continues until all 475 frequencies are chosen for the set. For selection of random frequency, the frequencies remaining within the group are always treated as equally likely.

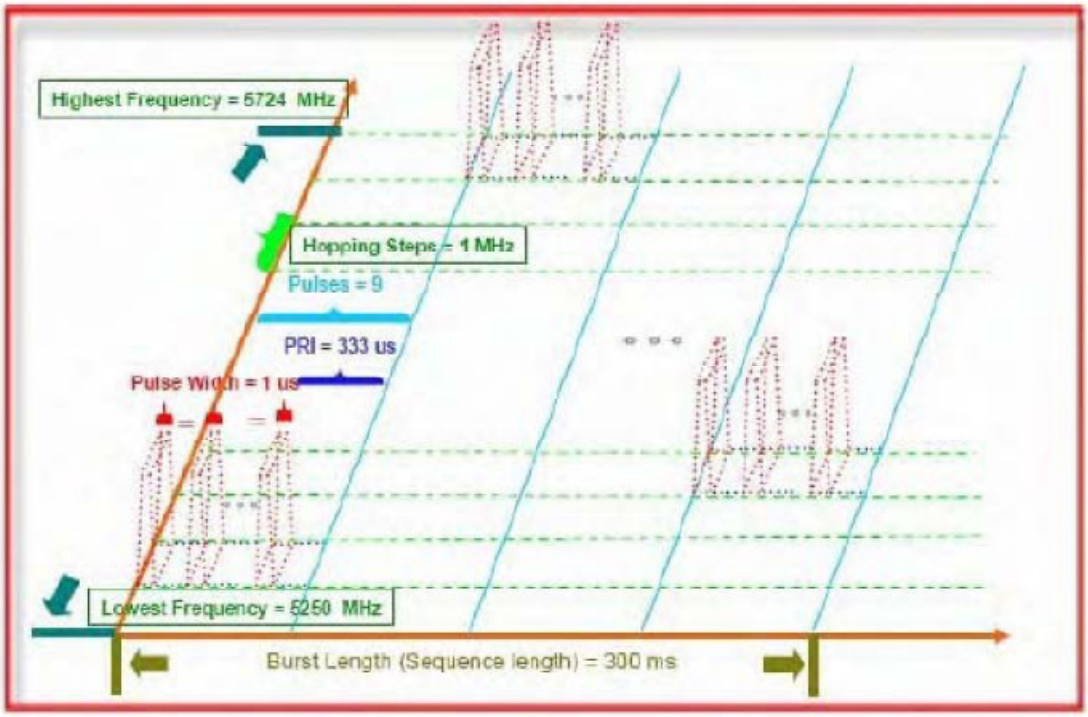

FCC Radar Types (6) System Diagram

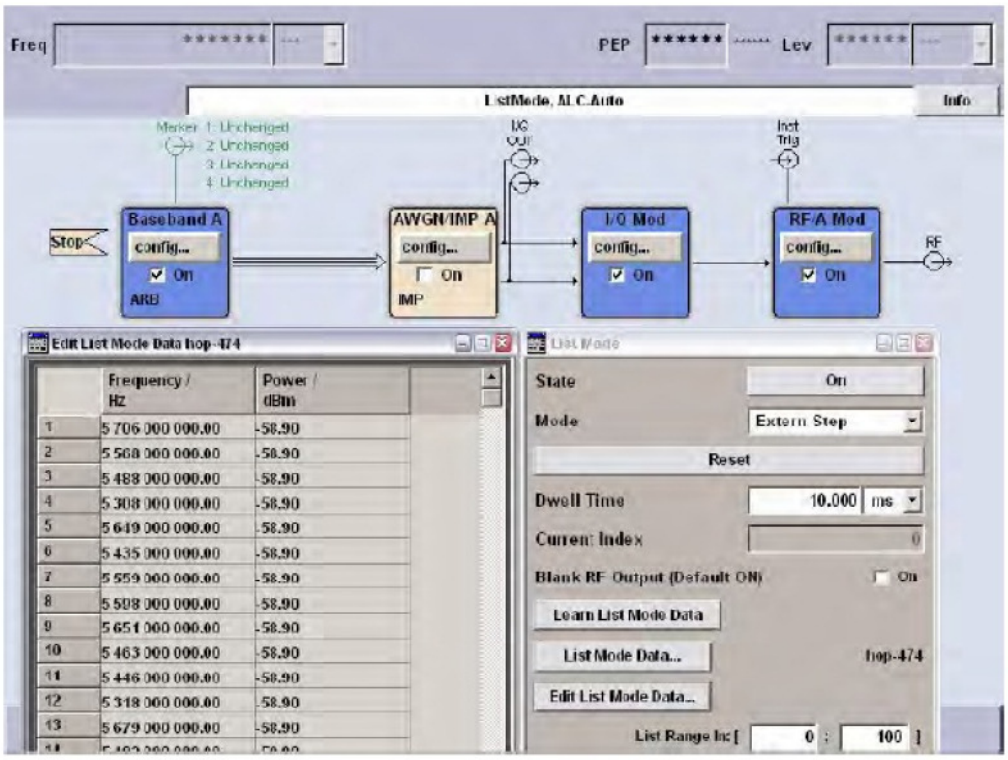

Used R&S SMU200A (Vector SG with two ARB)
B11: Base-band Generator with ARB (16M samples) and Digital Modulation
B13: Base-band Main Module
B106: frequency range (100 kHz to 6 GHz)
For selecting the waveform parameters from within the bounds of the signal type, system was random selection using uniform distribution.

4.6. Radiated Calibration Setup

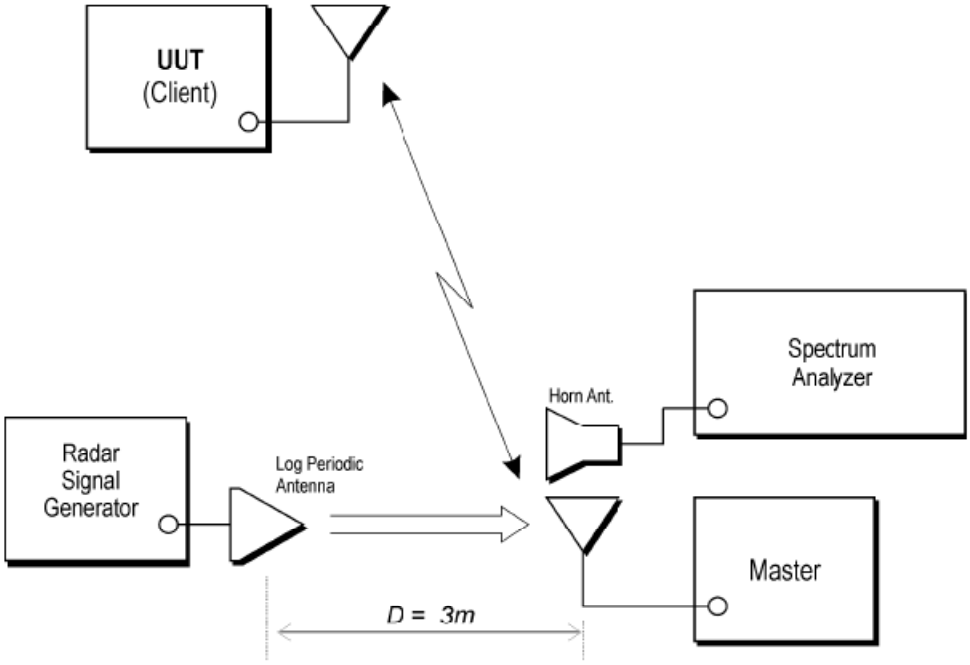

Radar Waveform Calibration Procedure
The measured channel is 5260MHz. The radar signal was the same as transmitted channels, and injected into the antenna of AP (master) or Client Device with Radar Detection, measured the channel closing transmission time and channel move time. The calibrated radiated detection threshold level is set to -62dBm. The tested level is lower than required level hence it provides margin to the limit.

4.7. Calibration Deviation

There is no deviation with the original standard.

4.8. Radar Waveform Calibration Result

DFS detection threshold level and the burst of pulses on the Channel frequency

20MHz

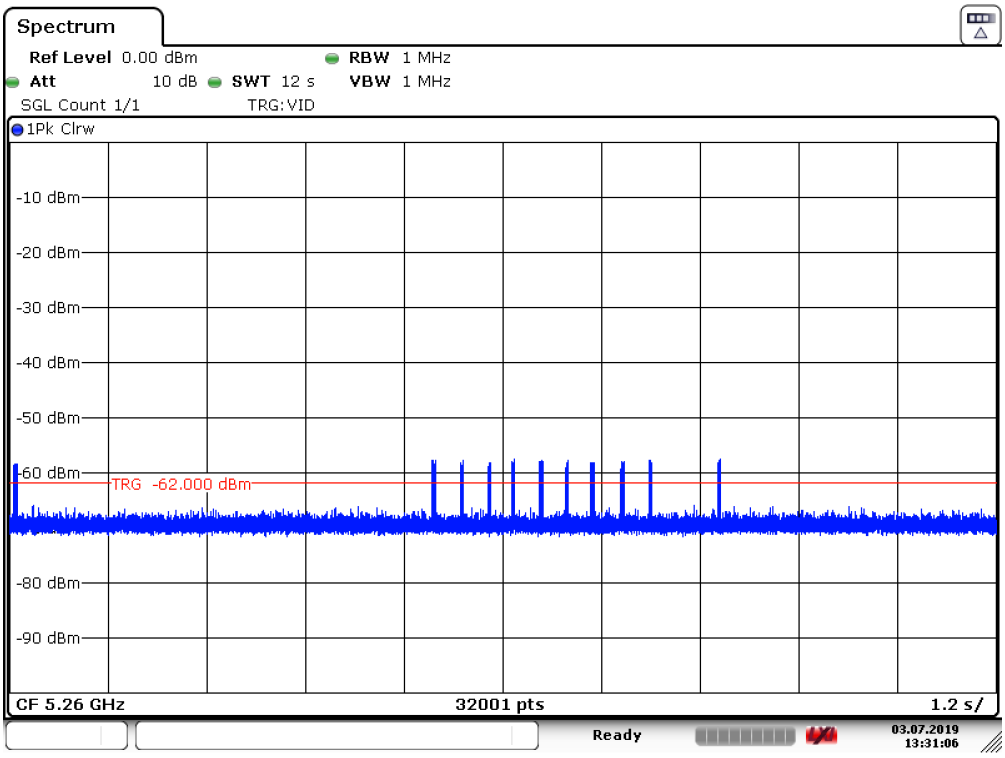

Date: 3.JUL.2019 13:31:06

5. TEST SETUP AND TEST RESULT

5.1. Test Setup

5.1.1. Test Setup Diagram

Following is the test setup for generated the radar waveforms and used to monitor UNII device.

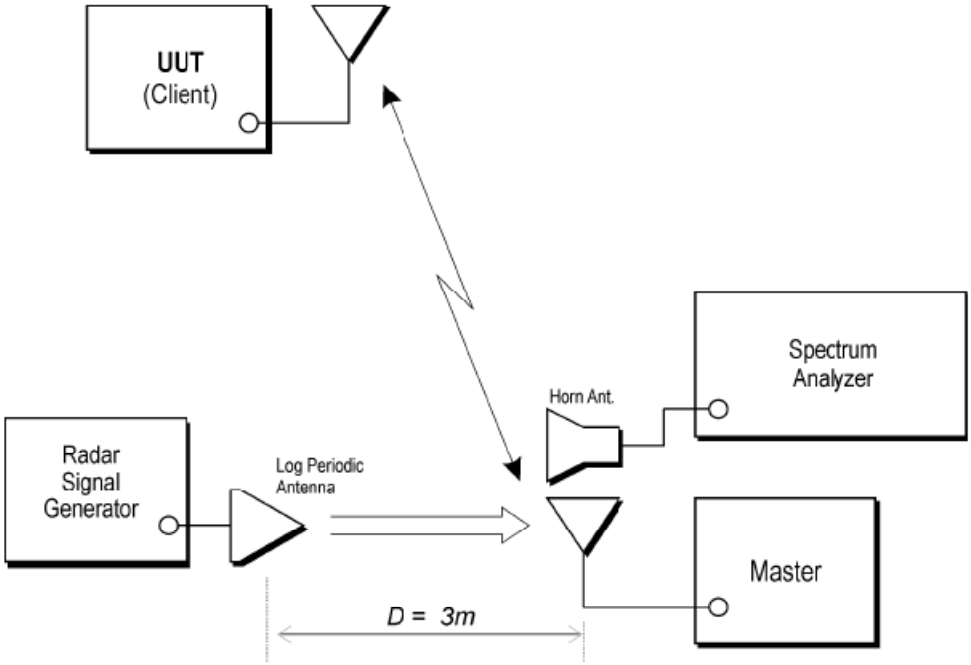

5.1.2. Test Setup Operation

System testing was performed with the designated MPEG test file that streams full motion video from the Access Point to Client in full motion video mode using the media player with the V2.61 Codec package. This file is used by IP and Frame based systems for loading the test channel during the in-service compliance testing of the U-NII device.
The waveform parameters from within the bounds of the signal type are selected randomly using uniform distribution.
A spectrum analyzer is used as a monitor to verify that the EUT has vacated the Channel within the (Channel Closing Transmission Time and Channel Move Time, and does not transmit on a Channel during the Non-Occupancy Period after the detection and Channel move. It is also used to monitor EUT transmissions during the Channel Availability Check Time.

5.1.3. Test Setup for Data Traffic Plot

20MHz

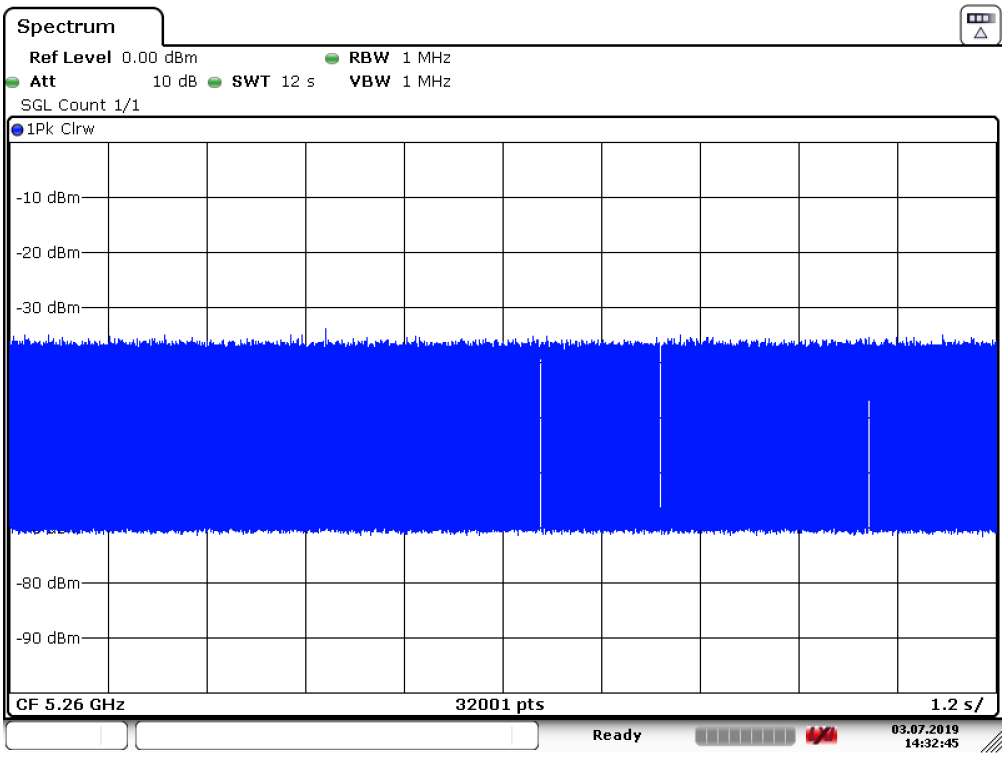

5.2. Channel Move Time, Channel Closing Transmission Time, Non-Occupancy Period, Non-Associated Client Beacon Measurement

5.2.1. Limit

Parameter	Value
Channel Move Time	10 seconds See Note 1.
Channel Closing Transmission Time	200 milliseconds + an aggregate of 60 milliseconds over remaining 10 second period. See Notes 1 and 2.
Non-Occupancy Period	Non-Occupancy Period time is 30 minute during which a Channel will not be utilized after a Radar Waveform is detected on that Channel
Non-Associated Client Beacon	The non-associated Client Beacon Test is during the 30 minutes observation time. The EUT should not make any transmissions in the DFS band after EUT power up.

Note 1: The instant that the Channel Move Time and the Channel Closing Transmission Time begins is as follows:

a. For the Short Pulse Radar Test Signals this instant is the end of the Burst.
b. For the Frequency Hopping radar Test Signal, this instant is the end of the last radar Burst generated.
c. For the Long Pulse Radar Test Signal this instant is the end of the 12 second period defining the Radar Waveform.

Note 2: The Channel Closing Transmission Time is comprised of 200 milliseconds starting at the beginning of the Channel Move Time plus any additional intermittent control signals required to facilitate a Channel move (an aggregate of 60 milliseconds) during the remainder of the 10 second period. The aggregate duration of control signals will not count quiet periods in between transmissions.

5.2.2. Test Procedures

5.2.2.1. When a radar Burst with a level equal to the DFS Detection Threshold + 1dB is generated on the operating channel of the U-NII device. A U-NII device operating as a Client Device will associate with the Master of channel. Stream the MPEG test file from the Master Device to the Client Device on the selected channel for entire period of the test. At time to the radar waveform generator sends a Burst of pulses for each of the radar types at Detection Threshold + 1dB.

5.2.2.2. Observe the transmissions of the EUT at the end of the radar Burst on the Operating channel. Measure and record the transmissions from the EUT during the observation time [Channel Move Time]. One 10 Second plot bee reported for the short Pulse Radar type 1-4 and one for the Long Pulse Radar Type test in a 22 second plot. The plot for the Short Pulse Radar types start at the end of the radar burst. The Channel Move Time will be calculated based on the plot of the short Pulse Radar Type. The Long Pulse Radar Type plot show the device ceased transmissions within the 10 second window after detection has occurred. The plot for the Long Pulse Radar type should start at the beginning of the 12 second waveform.

5.2.2.3. Measurement of the aggregate duration of the Channel Closing Transmission Time method. With the spectrum analyzer set to zero span tuned to the center frequency of the EUT operating channel at the radar simulated frequency, Peak detection and max hole.

5.2.2.4. Measure the EUT for more than 30 minutes following the channel close/move time to verify that the EUT does not resume only transmissions on this channel.

5.2.3. Test Result for Channel Closing Transmission Time & Channel Move Time

量測結果，請參見附錄一。

5.2.4. Test Result for Non-Occupancy Period, Non-associated Test

量測結果，請參見附錄一。

6. USER ACCESS RESTRICTION

DFS controls (hardware or software) related to radar detection are not accessible to the user.

附錄 一

受測裝置之測試結果

1. Test Result for Channel Closing Transmission Time & Channel Move Time

Test Date	2019/07/04	Temp./Hum.	25℃/52%
Test Mode	20MHz	Frequency	TX 5260MHz

Channel Closing Transmission Time	Channel move time < 10 S
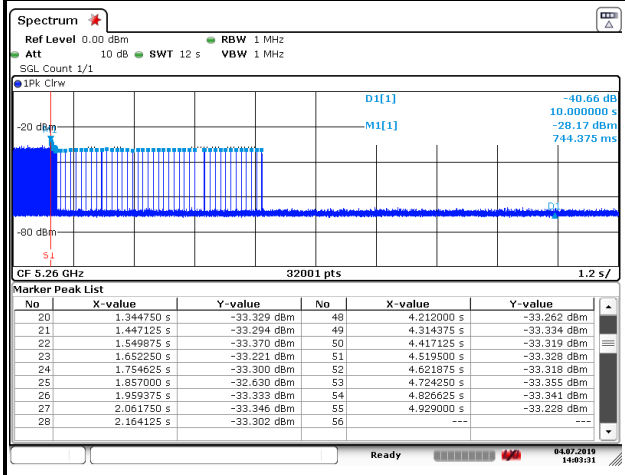	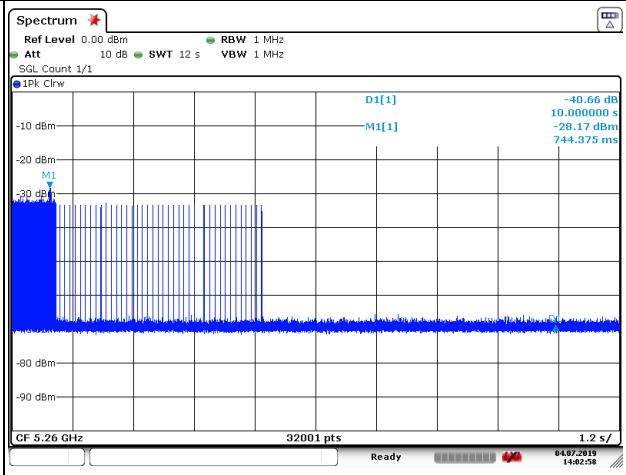

No	X-value	Y-value	No	X-value	Y-value
20	1.344750 s	-33.329 dBm	48	4.212000 s	-33.262 dBm
21	1.447125 s	-33.294 dBm	49	4.314375 s	-33.334 dBm
22	1.549875 s	-33.370 dBm	50	4.417125 s	-33.319 dBm
23	1.652250 s	-33.221 dBm	51	4.519500 s	-33.328 dBm
24	1.754625 s	-33.300 dBm	52	4.621875 s	-33.318 dBm
25	1.857000 s	-32.630 dBm	53	4.724250 s	-33.355 dBm
26	1.959375 s	-33.333 dBm	54	4.826625 s	-33.341 dBm
27	2.061750 s	-33.346 dBm	55	4.929000 s	-33.228 dBm
28	2.164125 s	-33.302 dBm	56	---	---

Channel Closing Transmission Time Calculated	
Sweep Time(S) sec	12
Sweep points (P)	32001
Number of Sweep points in 10 sec (N)	56
Channel Closing Time (C) ms	21.00

Channel closing time is calculated from C=N* dwell; where dwell is the occupancy time per sweep point calculated by the formula: dwell=S/P. N is the number of sweep points indicating transmission after S1; where S1 is the radar signal detected

2. Test Result for Non-Occupancy Period, Non-associated Test

Test Date	2019/07/03	Temp./Hum.	24℃/55%
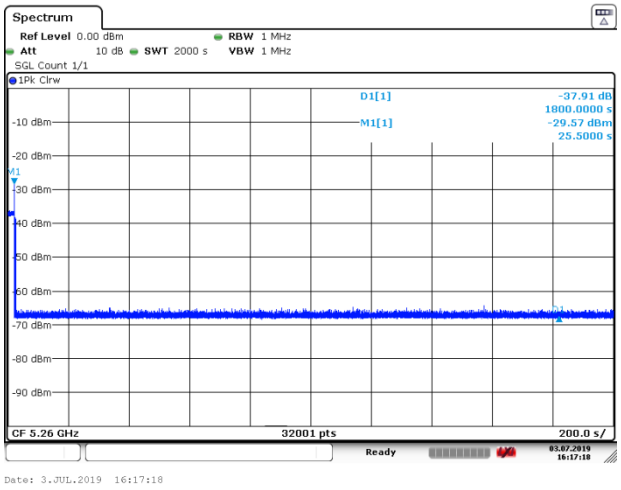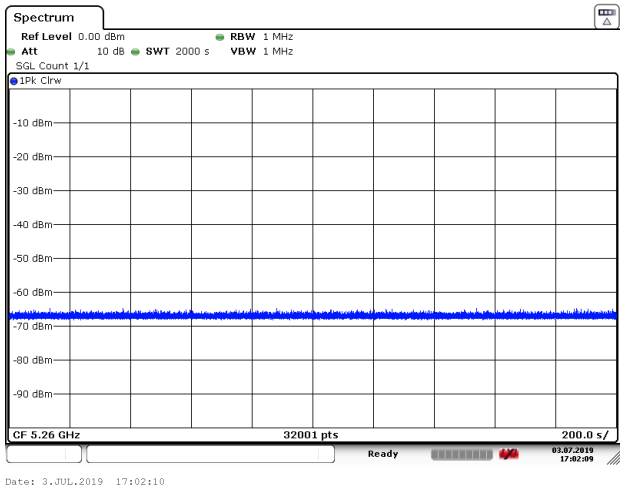
Test Mode: 20MHz	
TX 5260MHz	
Non-Occupancy Period	Non-associated Test