Openmoko Phoenux (GTA04)

"Upgrade board for the Openmoko Smartphones"

System Manual

For updates, errata and more information, please refer to www.gta04.org

Copyright: Golden Delicious Computers 2011-2012.

This document is licensed under the Creative Commons Attribution-NonCommercial-Share Alike 3.0 Unported License. To view a copy of this license, visit http://creativecommons.org/licenses/by-nc-sa/3.0/ or send a letter to Creative Commons, 444 Castro Street, Suite 900, Mountain View, California 94140, USA.

All derivative works are to be attributed to Golden Delicious Computers GmbH&Co. KG. For more information, see http://creativecommons.org/license/results-one?license_code=by-nc-sa

For commercial use, please contact Golden Delicious Computers GmbH&Co. KG for a license.

Table of Contents

1. Important Information 6
   1.1. Acknowledgement 6
   1.2. Product Safety 7
   1.3. Copyright 7
2. Welcome 9
   2.1. Feature comparison 9
   2.2. Device options 10
      2.2.1. GTA04 10
      2.2.2. GTA04 Custom 10
3. Package Contents 12
4. Replacing the Motherboard 13
   4.1. Preparation 13
   4.2. Opening the GTA 14
   4.3. Removing the GTA PCB 15
   4.4. Removing the Touch&LCD module from the old PCB 20
   4.5. Glueing the Touch&LCD module onto the GTA04 PCB 24
   4.6. Installing the GTA04 PCB in the case 25
   4.7. Testing the installation 28
   4.8. Closing the Cover 28
   4.9. What could go wrong? 29
5. Installing the optional Camera module 30
   5.1. Tools and Components 30
6. Hardware description 41
   6.1. Data Sheets 41
   6.2. Processor and Power 42
   6.3. RS232, DC-In and IrDA 46
      6.3.1. RS232 connector 46
      6.3.2. Building a cable 47
      6.3.3. DC-In 48
      6.3.4. IrDA 48
   6.4. WWAN (GSM, GPRS, EDGE, UMTS) 48
      6.4.1. Power on/off and Reset 48
   6.5. GPS 49
      6.5.1. Receiver 49
      6.5.2. External antenna and switch 49
      6.5.3. Power on/off and Reset 49
   6.6. WLAN & Bluetooth 49
      6.6.1. WLAN 49
      6.6.2. Bluetooth 49
      6.6.3. Power on/off and Reset 49
   6.7. FM Receiver / Transmitter with RDS 49
   6.8. Touch Screen and LCD 50
      6.8.1. LCD DSS 50
      6.8.2. LCD controller 50
      6.8.3. Touch screen 50
      6.8.4. Ambient Light Sensor (DIY) 50

©Golden Delicious Computers, 2011-2012. License: CC-BY-NC-SA.

6.9. Sensors 50
6.10. Headset Jack 2.5mm 51
6.10.1.Pin layout 51
6.10.2.Microphone Current Sensor 52
6.10.3.Composite-Video Out 53
6.10.4.AUX-In 53
6.11. Phone Peripherals 53
6.12. OTG-USB 53
6.13. Memory Cards 53
6.14. Buttons and LEDs 53
6.14.1.AUX Button 54
6.14.2.Power Button 54
6.14.3.LEDs 54
6.14.4.Torch and Flashlight LED (optional) 54
6.14.5.Keyboard controller (optional) 54
6.15. RFID-EEPROM (optional) 54
6.16. Camera (optional) 55
6.17. Test Pads 55
6.18. Battery holder (optional) 57
6.19. Expansion Connector (optional) 57
6.19.1.Connecting an external LCD 59
6.19.2.Part numbers 59
6.19.3.Mounting material 59
6.19.4.Position of the connectors and mounting holes 60
6.19.5.Pin numbers 60
6.19.6.Signal assignment 61
6.19.7.General Recommendations 63
6.19.8.Power demand estimates 63

7. Booting the device 65
7.1. Boot process 65
7.1.1. Choosing boot mode by AUX button 65
7.1.2. Choose boot options by GUI 66
7.1.3. Multi-Boot 66
7.1.4. How to boot from RS232 67
7.2. How to format a bootable SD/MMC card 67
7.3. Project and Bug Reports 67

8. U-Boot 68
8.1. New commands 68
8.2. Configuring the Splash Screen 68
8.3. Configuring the Boot Menu 68
8.4. Memory layout 68
8.5. How to flash the NAND 69
8.6. Tips & Tricks 69
8.6.1. Clearing the environment in NAND 69
8.6.2. Bootdelay has been set to 0 69
8.7. Building from Source code 69
8.8. Project and Bug Reports 70

9. Linux Kernel 71
9.1. Machine ID 71
9.2. Kernel bootargs 71

©Golden Delicious Computers, 2011-2012. License: CC-BY-NC-SA.

9.3. Drivers 71
9.4. Kernel Modules 71
9.5. Root-Filesystem 72
9.6. Building from Source code 72
9.7. Project and Bug Reports 72

10. Device Drivers 73
10.1. GPS 73
10.2. Bluetooth 73
10.3. WLAN 73
10.4. WWAN 73
10.4.1. Driver 73
10.4.2. AT commands 73
10.5. Audio / Voice 79
10.6. I2C1 devices 79
10.7. I2C2 devices 79
10.8. GPIO assignment 80
10.9. Board version encoding 81
10.10. Significant Hardware changes 81
10.10.1. GTA04A1 to GTA04A2 82
10.10.2. GTA04A2 to GTA04A3 82
10.10.3. GTA04A3 to GTA04A4 82

11. Legal Info 83
11.1. Safety Instructions 83
11.2. CE - Conformity 83
11.3. FCC 83
11.4. Allowed WLAN frequency range 84
11.5. ROHS 84
11.6. Recycling / WEEE (ID: DE80183434) 84
11.7. US-EAR 84
11.8. GPL 84
11.9. Trademarks 84
11.10. Copyright 84
11.11. Limitation of Liability 85

12. Warranty 86

13. Change History 87

14. Schematics 88
14.1. Page 1 Block Diagram 88
14.2. Page 2 Display, Touch Controller, Backlight 88
14.3. Page 3 CPU, SD-Card, PCB-Version, Boot options 88
14.4. Page 4 CPU-TPS, Vibra, LEDs, Misc 88
14.5. Page 5 Clock, Charging, Battery 88
14.6. Page 6 TPS/OMAP Power 88
14.7. Page 7 Audio Codec, Video 88
14.8. Page 8 USB-OTG 88
14.9. Page 9 internal WWAN-USB 88
14.10. Page 10 WWAN/UMTS Modem + SIM 88
14.11. Page 11 WLAN/BT 88
14.12. Page 12 GPS 88

©Golden Delicious Computers, 2011-2012. License: CC-BY-NC-SA.

14.13. Page 13 Sensors (Accelerometer, Barometer, Compass, ...) 88
14.14. Page 14 FM-TRX, RFID-EEPROM 88
14.15. Page 15 RS232, IrDA 88
14.16. Page 16 (Keypad Controller option) 88
14.17. Page 17 Camera 89
14.18. Page 18 (VGA, DVI option) 89
14.19. Page 19 B2B Connectors 89
14.20. Component placement Top 89
14.21. Component placement Bottom 89

©Golden Delicious Computers, 2011-2012. License: CC-BY-NC-SA.

1. Important Information

1.1. Acknowledgement

This work would not have been possible without numerous contributors behind the scene. The first and most important to mention is of course „Openmoko, Inc.“, headed by Sean Moss-Pultz, who had the idea of an updatable smartphone, running a completely free software stack, in 2006.

He gathered a core team that consisted of Harald 'LaForge' Welte, Michael 'Mickey' Lauer, and Werner Almesberger - and together with a bunch of taiwanese engineers, the first product (back then still under the housing of FIC Computers) appeared in 2007: the Neo 1973 (GTA01).

Right after the launch of GTA01, a grown team (too many to mention) developed an improved version - the Openmoko Freerunner (GTA02) - which added WiFi and LEDs and substituted the Neo's GPS chip (which still required a non-free driver to operate) with a FOSS-friendly one. This product arrived 2008 and was an immediate success, despite the iPhone already becoming very popular (but not that open as the community had hoped).

Around these hardware efforts (where many well known people from the Open Source world also have contributed), the OpenMoko Community was founded (www.openmoko.org). A lot of important software projects started in this ecosystem, perhaps most notably the freesmartphone.org middleware and custom Linux Distributions for Smartphones, such as SHR, Aurora, QtMoko, and hackable:1.

Unfortunately, together with the rising popularity of Android and the economic downturn late 2008 forced Openmoko, Inc. to abandon all ongoing smartphone projects (i.e. the almost finished GTA03 project) early 2009 - leaving a huge gap in the department of FOSS friendly hardware.

It was then, that a small team[1] from Munich, taken under the wings of Golden Delicious Computers, started to think about filling that gap. Just in that timeframe, the BeagleBoard had appeared. Thanks to the openness of both projects (schematics and component lists are public and the BeagleBoard components are relatively easily to purchase), it appeared feasible to develop new hardware for the existing GTA02 case. Starting with small quantities and ignoring plastics case production helped to keep the investment low.

After learning details of the TI OMAP3 SoC it was decided in Summer 2009 to start development of the GTA04. And after many months of work (with ups and downs), we did see the first Linux boot prompt on battery powered real hardware. And now, again several months later, we have got production started.

Here it is!

[1] Rene Leitner, Christoph Mair, Nikolaus Schaller

©Golden Delicious Computers, 2011-2012. License: CC-BY-NC-SA.

1.2. Product Safety

1. Before entering an area where Mobile Phones are prohibited (e.g. Airplane, Hospital), remove the battery! The hardware+software can‘t guarantee that the mobile phone transmitter is switched completely off.
2. Keep away from liquids.
3. Do not operate above 35 degrees surrounding temperature (inside temperature may be 20-30 degrees above outside temperature).
4. Don‘t heat up the battery above 80 degrees.
5. Don‘t expose to direct sunlight even if switched off.
6. Only use the provided charging unit or use the USB socket of a computer.
7. Use only safe and correctly installed power outlets.
8. This device emits GSM/UMTS as well as other radio waves. A medical risk has neither been proven nor disproven so far. Certification/Approval requires to keep the antennas at least 20cm away from persons.
9. The Emergency call (112 / 911) capability may be limited by your installed software. So, please carry a working mobile phone with you for placing emergency calls.
10. This device can create audible sounds through the built-in speaker or a connected headset. If the acoustic waves are too powerful and/or for a long duration, this may cause hearing damage.
11. The device can be used as a recorder and player device. This requires to comply to intellectual property laws.
12. Let repairs and maintanance be done only by qualified service persons.

1.3. Copyright

This document including the schematics are under Copyright protection. This includes translation of the Schematics into a CAD tool.

This work is licensed under the Creative Commons Attribution-NonCommercial-Share Alike 3.0 Unported License. To view a copy of this license, visit http://creativecommons.org/licenses/by-nc-sa/3.0/ or send a letter to Creative Commons, 444 Castro Street, Suite 900
Mountain View, CA 94041, USA.

All derivative works are to be attributed to Golden Delicious Computers GmbH&Co. KG.

For commercial use of this document, please contact Golden Delicious Computers GmbH&Co. KG for a license.

The full licence text can be found at:
http://creativecommons.org/licenses/by-nc-sa/3.0/legalcode

Here is a summary (http://creativecommons.org/licenses/by-nc-sa/3.0/):

You are free:

to Share — to copy, distribute and transmit the work

to Remix — to adapt the work

Under the following conditions:

Attribution — You must attribute the work in the manner specified by the author or licensor (but not in any way that suggests that they endorse you or your use of the work).

Noncommercial — You may not use this work for commercial purposes.

Share Alike — If you alter, transform, or build upon this work, you may distribute the resulting work only under the same or similar license to this one.

With the understanding that:

Waiver — Any of the above conditions can be **waived** if you get permission from the copyright holder.

Public Domain — Where the work or any of its elements is in the **public domain** under applicable law, that status is in no way affected by the license.

Other Rights — In no way are any of the following rights affected by the license:

- Your fair dealing or **fair use** rights, or other applicable copyright exceptions and limitations;
- The author's **moral** rights;
- Rights other persons may have either in the work itself or in how the work is used, such as **publicity** or privacy rights.

Notice — For any reuse or distribution, you must make clear to others the license terms of this work. The best way to do this is with a link to this web page.

©Golden Delicious Computers, 2011-2012. License: CC-BY-NC-SA.

2. Welcome

With this Openmoko GTA04 „new personality board“ you have choosen a bright future for your existing Openmoko Freerunner (or Neo 1973) by simply swapping the motherboard and reviving it like a „Phoenux“.

2.1. Feature comparison

There may be GTA04 variants that don‘t have all features installed.

Feature	GTA02 / GTA01	GTA04
Display	VGA (touch screen)	same VGA (touch screen, single touch with pressure detection)
Processor	400 MHz, S3C2442 (GTA01: S3C2410)	800 MHz, DM3730
Processor Functions	ARM v4	ARMv7 (Cortex A8), NEON, integrated DSP (TMS320C64x)
GPU	GTA02: Smedia Glamo	OpenGL© ES 2.0 capable 2D/3D graphics accelerator (SGX530)
RAM	128 MB	512 MB
Flash	256 MB (GTA01: 64 MB)	512 MB
ext. Memory	microSDHC	microSDHC (up to 32 GB)
WAN	Triple-Band GSM (2 versions 850/900), GPRS	Quad-Band GSM, EDGE, UMTS HSDPA 14.4 MBit/s, HSUPA 5.76 MBit/s
GPS	16 channel, int/ext. Antenna	20 channel, int/ext. Antenna
FM Radio	-	FM receiver and transmitter, both with RDS
LAN	802.11b/g (GTA02 only), Bluetooth	802.11b/g, Bluetooth
USB	1.1: Client, Charger, (inofficial Host mode)	2.0: full OTG (Client, Charger, Host)
Camera	-	1.3 Mpx (optional)
Sensors	1 or 2 Accelerometers	3-axis Accelerometer 3-axis Compass 3-axis Gyroscope Barometer/Thermometer Ambient Light (optional)

©Golden Delicious Computers, 2011-2012. License: CC-BY-NC-SA.

Feature	GTA02 / GTA01	GTA04
Audio / Video	Ear, Microphone, Handsfree speaker (GTA01: Stereo), 2.5mm 4pin Audio Headset Jack	Ear, Microphone, (Stereo) Handsfree, 2.5mm 4pin AV Jack (Composite-Video-Out, Audio in/out, Remote Control)
Battery	replaceable 3.7 V LiIon, 1200 mAh	replaceable 3.7 V LiIon, 1200 mAh
Others	2 Buttons, 3 LEDs (GTA01 no LEDs)	2 Buttons, 4 LEDs RS232 (full level, RX/TX/RTS/CTS) Expansion connectors (internal) Torch/Flash controller RFID tag chip with EEPROM
Debugging	JTAG Debug Board	RS232 console

2.2. Device options

There may be different device options where we have added or removed some internal components. So not all components described in this manual need to be in your specific device. For other options, please contact us.

2.2.1. GTA04

this variant comes with UMTS, WLAN, Bluetooth and GPS and has all sensors (Compass, Altimeter, Gyroscope, ...) installed.

2.2.2. GTA04 Custom

we can produce customized variants which have board to board connectors on the display side. Typically they don‘t include:

- display connector
- headset jack
- pogo pins for speakers
- microphone
- battery connector
- backup battery/capacitor
- AUX and Power buttons
- LEDs
- RS232
- accelerometer

An example of such a module to plug into a motherboard which can carry a larger display is shown below:

©Golden Delicious Computers, 2011-2012. License: CC-BY-NC-SA.

©Golden Delicious Computers, 2011-2012. License: CC-BY-NC-SA.

3. Package Contents

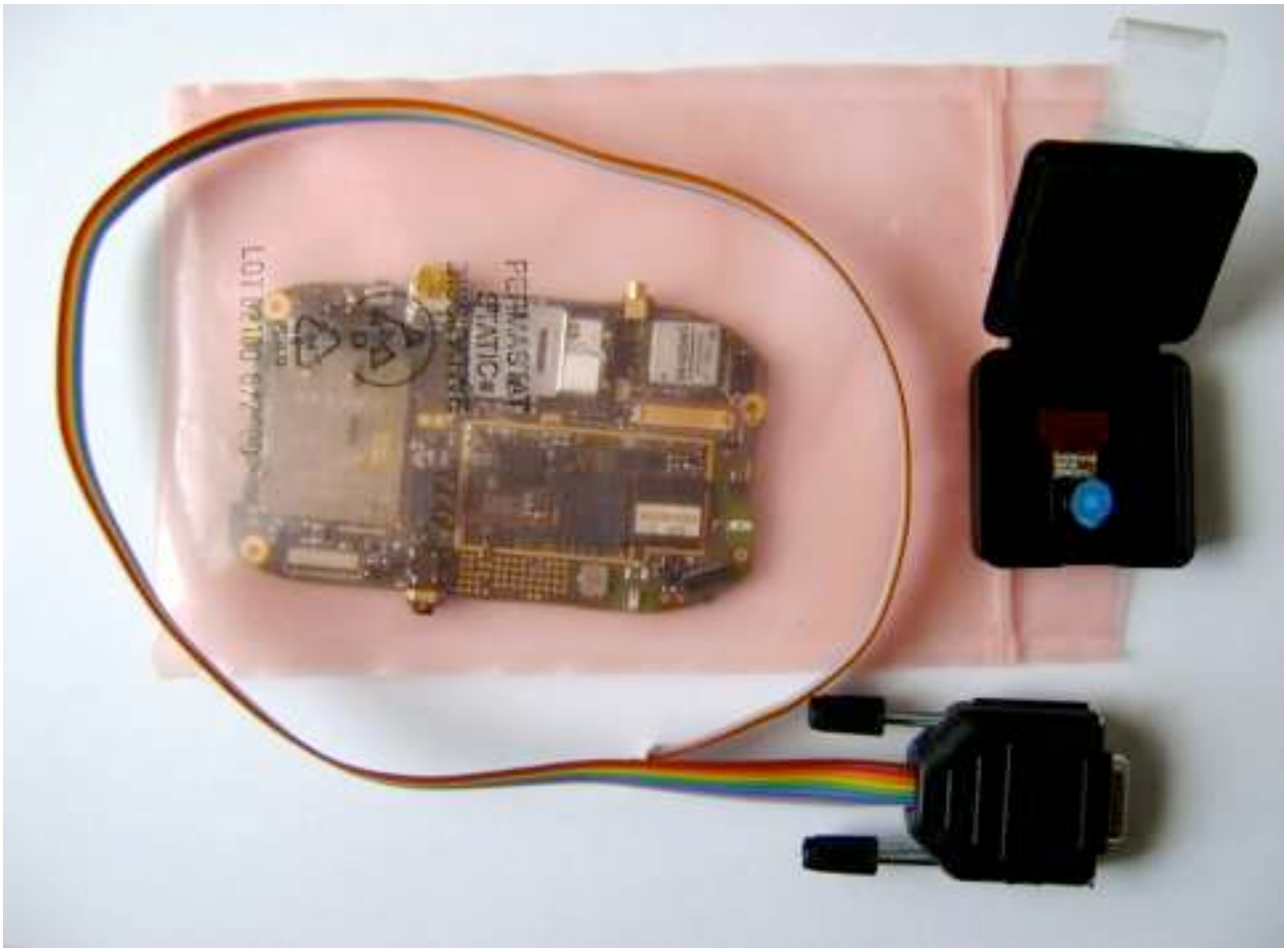

- GTA04 mother board
- optional: RS232 cable
- optional: camera module

©Golden Delicious Computers, 2011-2012. License: CC-BY-NC-SA.

4. Replacing the Motherboard

This section is about self-installation of the new motherboard into an existing Freerunner (or Neo 1973) case. If you don‘t feel comfortable to do it yourself after reading this section, please contact your vendor for a PCB-swapping service.

Please also refer to: http://wiki.openmoko.org/wiki/Disassembling_Neo1973#Display

4.1. Preparation

You will need:

- 1x Flat and clean working surface
- 1x Openmoko Neo Freerunner (GTA02) or Openmoko Neo1973 (GTA01)[2]
- 1x GTA04 mother board
- 1x Screwdriver with Torx T5 head
- 1x Small flat-head screwdriver
- 1x Guitar pick 0.73 mm (smallest M size) or similar thin tool[3]
- 1x Swiss Army Knife (or similar)
- 1x Telephone / Credit / Debit or similar card
- 1x optionally a blow dryer
- 1x Towel

[2] The photos show a Neo Freerunner. For the Neo1973 the procedure is identical although the inner parts of the device look slightly different.

[3] Fingernails may be sufficient but aren‘t recommended.

©Golden Delicious Computers, 2011-2012. License: CC-BY-NC-SA.

4.2. Opening the GTA

1. Please ground yourself to avoid electrostatic discharge by touching a grounded conductor. If available, use an antistatic wrist strap, pad or other ESD-safe environment.
2. Remove battery cover.
3. Remove battery (if present).
4. Remove SIM and SD (if present) and close the SD and SIM Slot:

5. Open the two Torx screws:

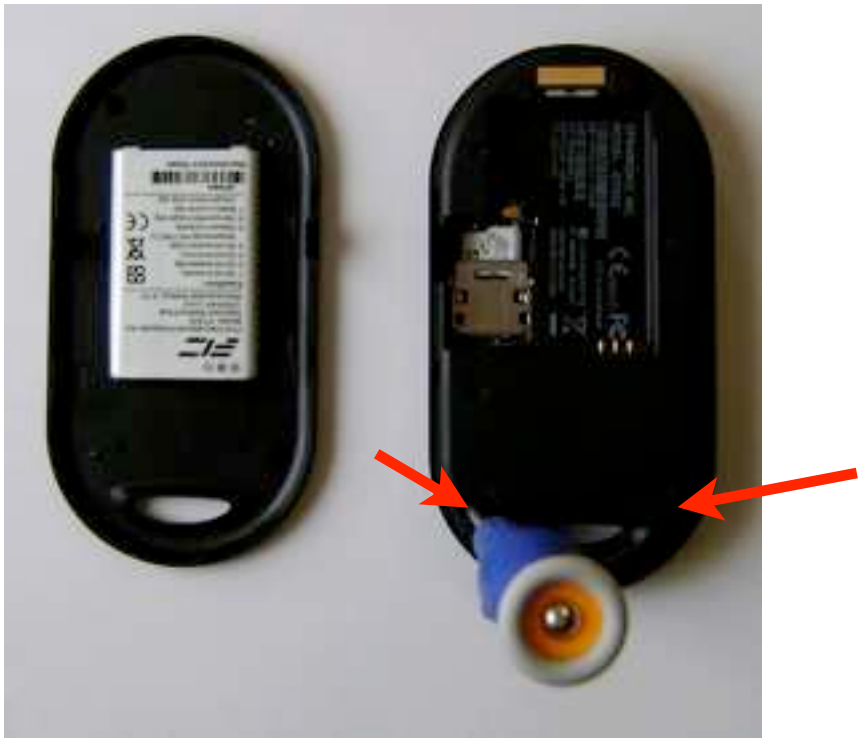

©Golden Delicious Computers, 2011-2012. License: CC-BY-NC-SA.

6. Take the guitar pick and insert it between middle and front cover at the side where the Torx screws had been:

7. Carefully open the snap-fits around the front cover.
8. Remove the Front cover (take care that the GPS antenna does not fall out).

4.3. Removing the GTA PCB

1. Place the Freerunner or Neo1973 in front of you with the headset jack pointing to you as shown on the photo:

©Golden Delicious Computers, 2011-2012. License: CC-BY-NC-SA.

2. Hold the device as shown below. Bend out the plastic case a little by moving your thumbs outwards while pressing from the backside with the left index finger. Then, the headset jack snaps out of its hole

3. this is the position of the left index finger

©Golden Delicious Computers, 2011-2012. License: CC-BY-NC-SA.

3. Headset jack and snap-fit snapped out

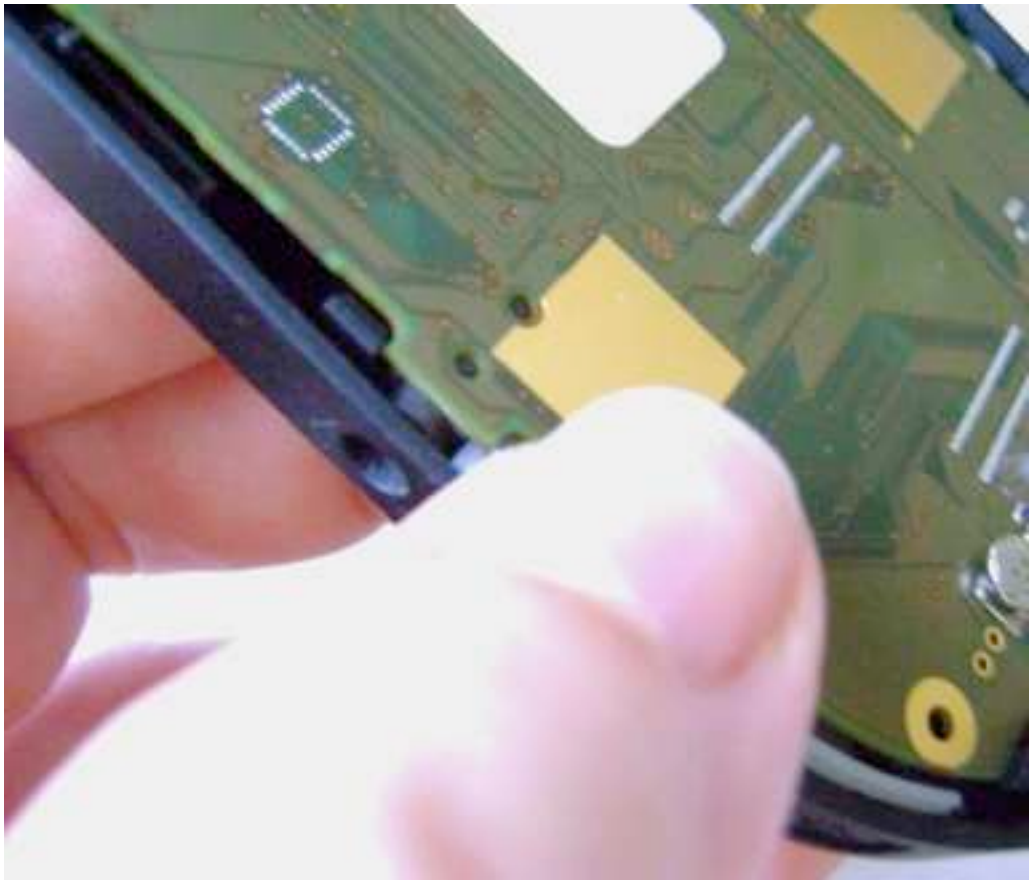

4. Snap out the AUX button

©Golden Delicious Computers, 2011-2012. License: CC-BY-NC-SA.

5. Lift up the PCB so that the headset jack is outside the case (but don't slant more than shown since it may break the USB and MMCX sockets at the other side of the PCB)

6. pull out the PCB to the left side (do not bend or pull upwards)

©Golden Delicious Computers, 2011-2012. License: CC-BY-NC-SA.

7. Take out the GPS antenna and the PCB (carefully so that you don‘t break the cable connecting both):

8. Carefully unplug the GPS antenna from the U.FL socket:

Take care that the plastic parts for the buttons don‘t come out of the middle cover.

You do not need to remove the GSM antenna.

©Golden Delicious Computers, 2011-2012. License: CC-BY-NC-SA.

4.4. Removing the Touch&LCD module from the old PCB

1. Open the silver tape on the flexible PCB:

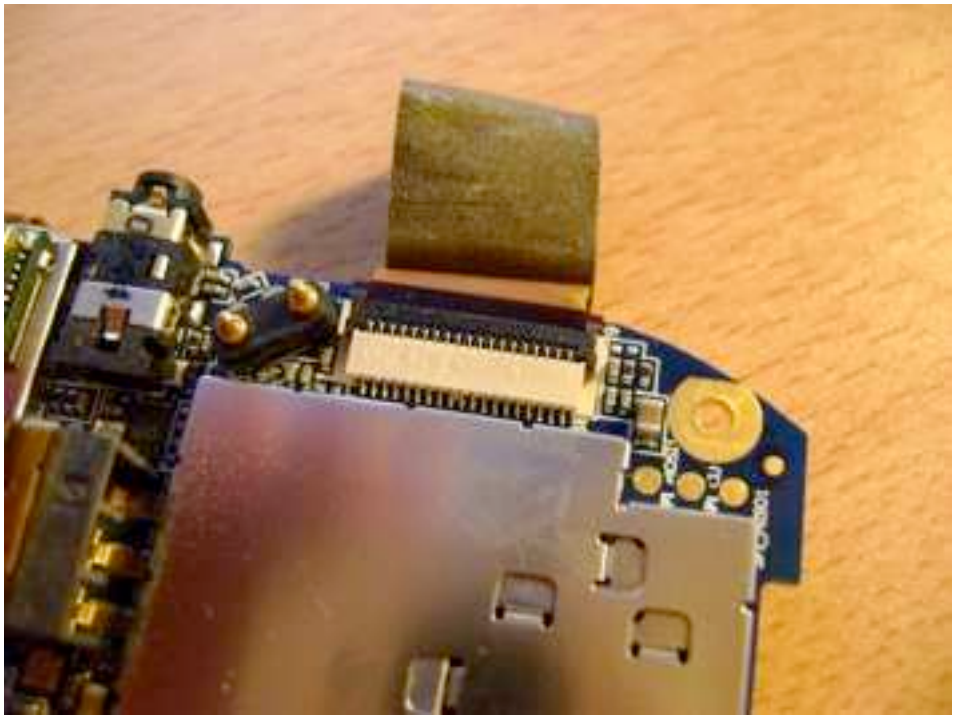

2. Carefully open the PCB connector with your finger nail:

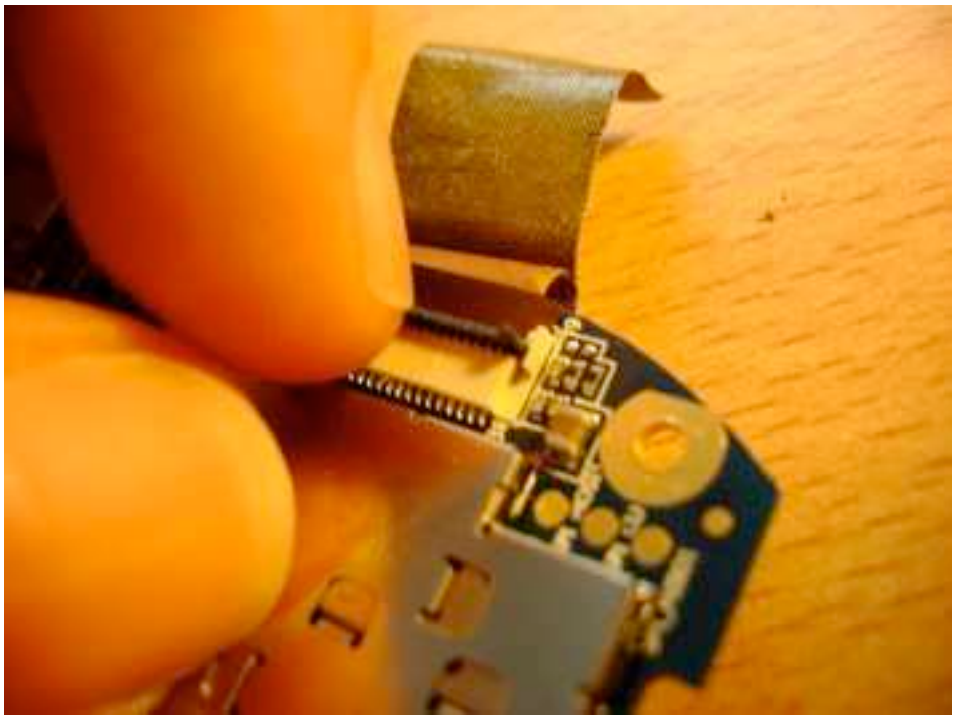

Never push the black lever away from the white part - it may snap out of the joints.
Don‘t bend more than 90 degrees - the joints may break.
A broken connector can not be repaired. Replacement needs professional equipment!

For instructions see: http://www.hirose.co.jp/cataloge_hp/e58613007.pdf (page 10&11)

©Golden Delicious Computers, 2011-2012. License: CC-BY-NC-SA.

3. The display module is mounted by 3 stripes of double-sided transparent tape. There are also 4 conducting silver pads only glued to the PCB as shown in the photo below (after removing the display). They should not become damaged as shown in this example:

Be very careful not to damage the flexible PCB cables (there is one for connecting the touch screen to the module that you can see only after removing the display module; on the left side of the next picture).

©Golden Delicious Computers, 2011-2012. License: CC-BY-NC-SA.

4. Now carefully insert the Telephone Card between the LCD and the black mat on the PCB:

Start with the top right corner (opposite of the flexible cable) and insert between silver pad and display backplane.

5. Using a blow dryer to warm/heat up the display softens the glue and makes it less likely to damage the display module.

6. Carefully push in the card and move it between LCD module and black mat to remove the LCD (don‘t bend the LCD module as it may break the glass):

©Golden Delicious Computers, 2011-2012. License: CC-BY-NC-SA.

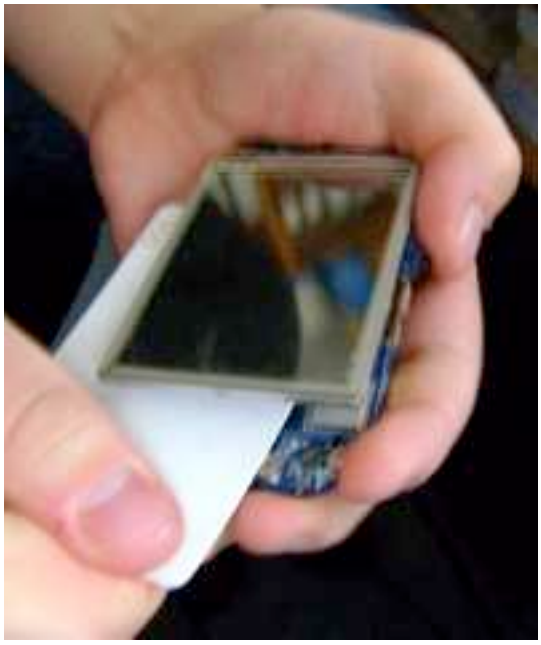

Finally, lift off the display module.

©Golden Delicious Computers, 2011-2012. License: CC-BY-NC-SA.

7. Peel off any remaining double-sided tape (photo) from the backside of the LCD

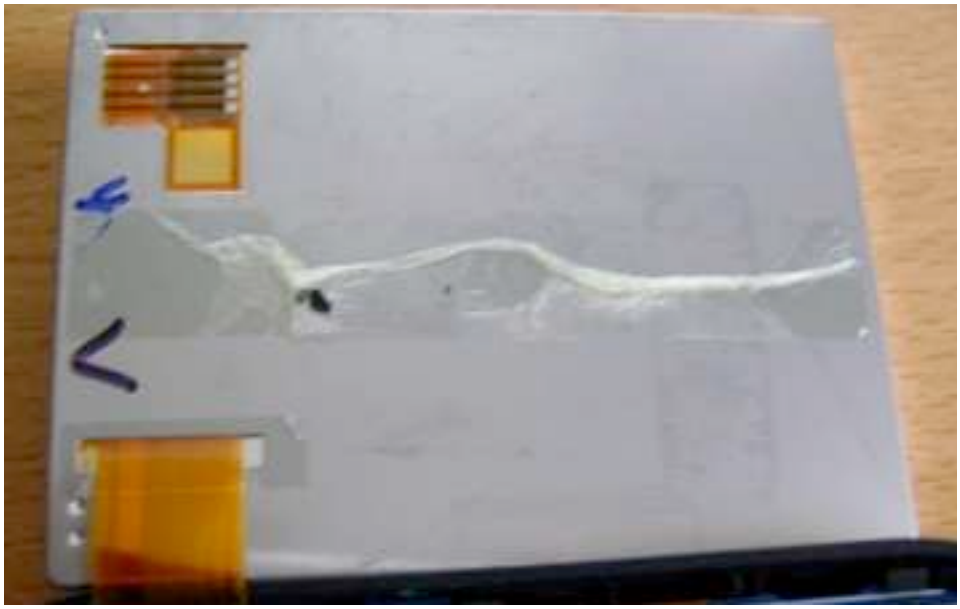

8. Carefully stow away the Freerunner PCB in some anti-static bag or package (in case you may want to reuse it in the future)

4.5. Glueing the Touch&LCD module onto the GTA04 PCB

1. Peel off the plastic cover on the double-sided tape of the GTA04 PCB.
2. Take your GTA04 board and close the SD and SIM card slots completely.
3. Carefully position and glue the Module to the new PCB:

©Golden Delicious Computers, 2011-2012. License: CC-BY-NC-SA.

4. Open the LCD connector and carefully insert the flexible PCB completely

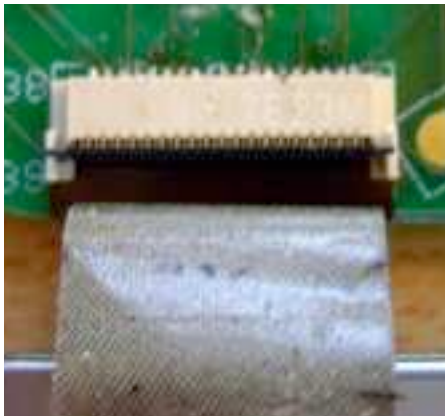

5. Close the LCD connector

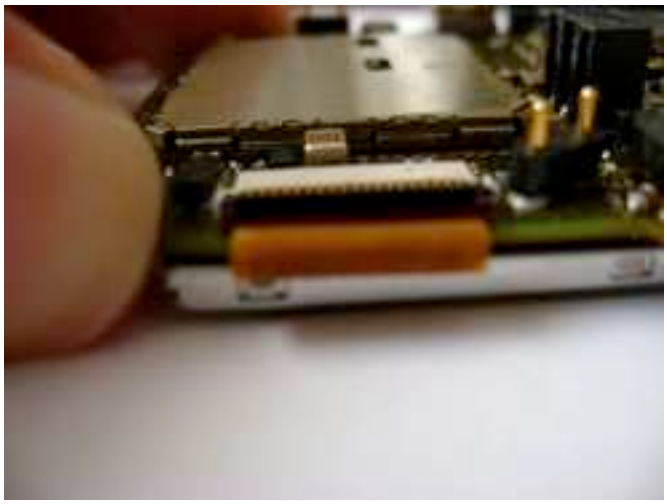

6. Glue the silver tape over the connector.

4.6. Installing the GTA04 PCB in the case

1. take the middle case part and cut out the corners of the USB connector hole. The GTA04 has a real OTG socket (right side) which is slightly larger than the GTA01/2 (left side):

©Golden Delicious Computers, 2011-2012. License: CC-BY-NC-SA.

Now start cutting:

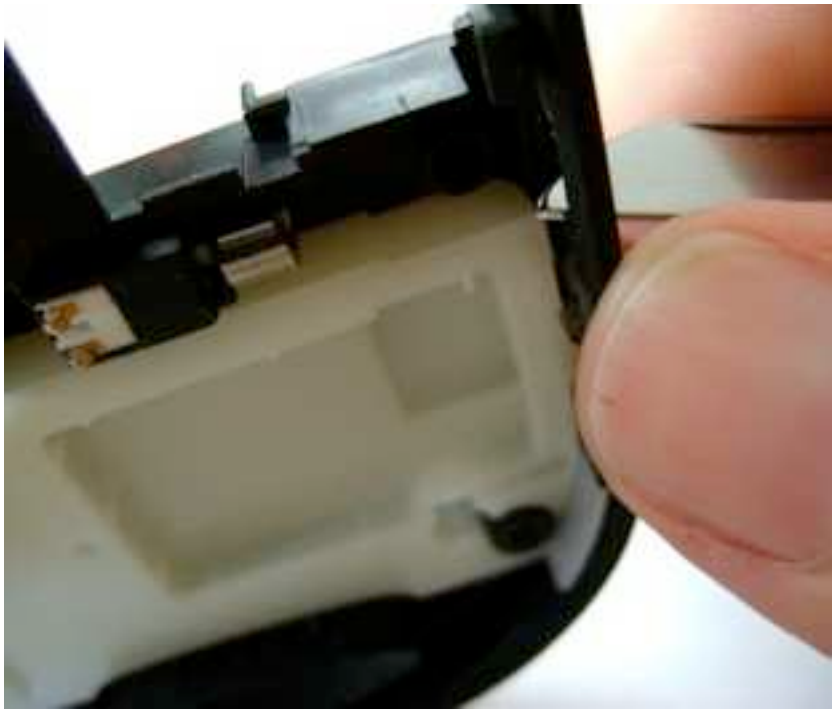

How it should look after this procedure:

Check if it fits smoothly without force by trying to insert the USB socket from the outside

©Golden Delicious Computers, 2011-2012. License: CC-BY-NC-SA.

2. Carefully connect the GPS antenna to the U.FL plug
3. Place the middle cover in front of you in the orientation as shown:

4. Carefully insert the internal GPS antenna into the middle cover
5. Insert the PCB at the USB and GPS antenna side into the holes.
6. Lower the PCB on the Headset Jack side (should not need any brute force).
7. Bend away the middle cover part at the headset connector so that the PCB can be fully lowered down:

©Golden Delicious Computers, 2011-2012. License: CC-BY-NC-SA.

8. Now, check that all snap-fits are engaged properly:

4.7. Testing the installation

Now test the device as follows:

1. Insert a SD card with u-boot, kernel and rootfs.
2. Insert a charged battery.
3. The GTA04 should boot.
4. Check if the LCD and Touch are working - if not, check the Touch&LCD connector.

4.8. Closing the Cover

1. Place the front cover on the middle case part.
2. Close the snap-fits from microphone side to top.
3. Turn around the Freerunner and insert and close the Torx screws.
4. Check that the AUX and Power buttons are working mechanically.
5. Remove the old Openmoko sticker in the battery compartment (you can keep it if you ever want to replace the old PCB back).
6. Glue the new GTA04 sticker in the battery compartment (it shows the new branding, IMEI and certifications). This is required by laws before operating the device.

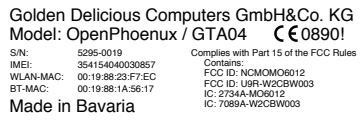

7. Install SIM, SD and Battery and close the Battery cover.
8. Test the device.
9. Take the towel to dub your forehead.
10. Go scream your success on the Openmoko mailing lists and IRC!

4.9. What could go wrong?

Please check the mailing lists / wiki[4] and share your experiences.

[4] see www.gta04.org

©Golden Delicious Computers, 2011-2012. License: CC-BY-NC-SA.

5. Installing the optional Camera module

5.1. Tools and Components

We recommend these tools:

- vernier slide gauge
- plectrum
- sharp knife
- small screwdriver
- 2.5mm and a 8.5 mm drill plus drilling machine(s)

1. mark 12.5 mm on from the wall to the SD card compartment

©Golden Delicious Computers, 2011-2012. License: CC-BY-NC-SA.

2. predrill the hole with 2.5mm in the middle of the compartment

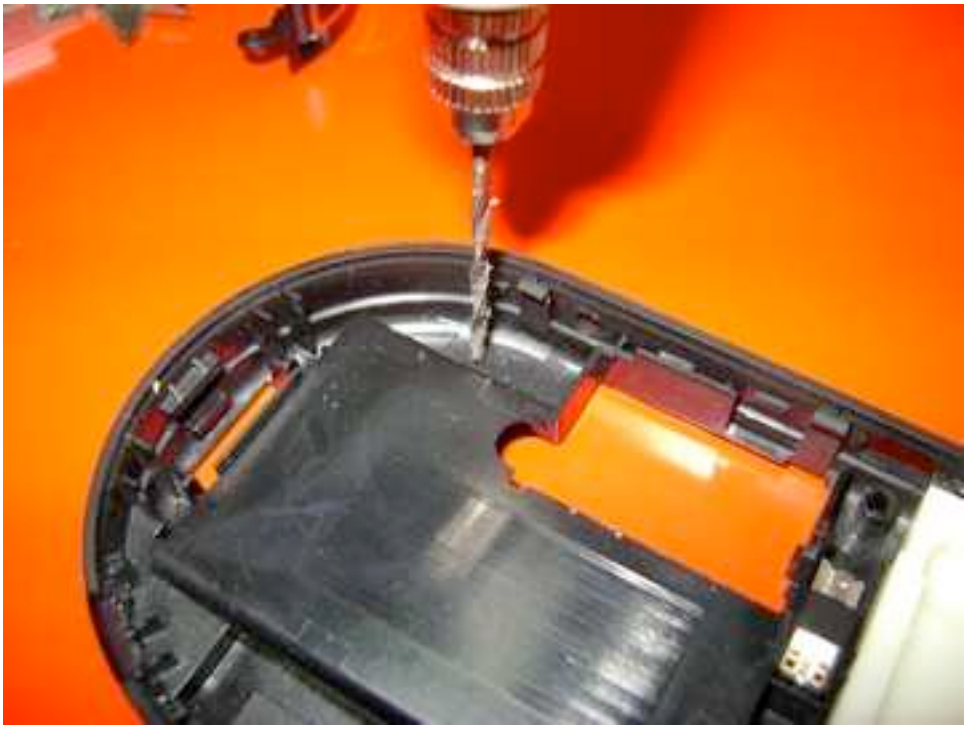

©Golden Delicious Computers, 2011-2012. License: CC-BY-NC-SA.

3. drill the 8.5mm hole from inside out

©Golden Delicious Computers, 2011-2012. License: CC-BY-NC-SA.

4. cut off excess material

5. there is a bead that holds a snap fit of the display cover which must be removed

©Golden Delicious Computers, 2011-2012. License: CC-BY-NC-SA.

take the knife and cut it off

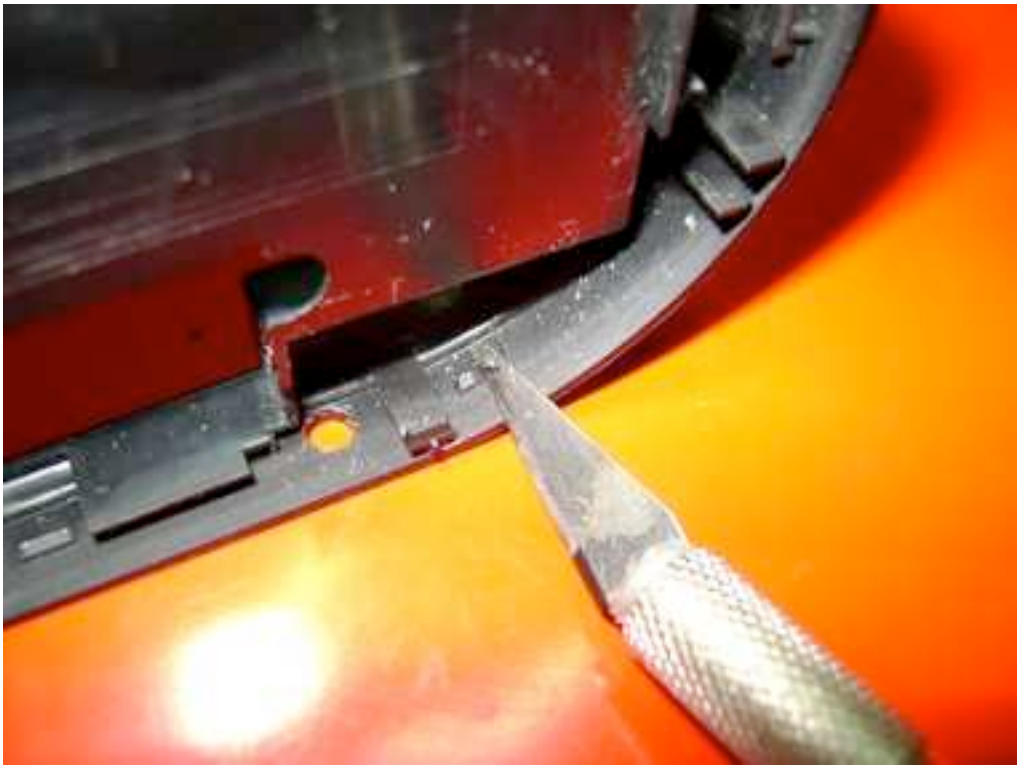

6. on the display cover, trim the corresponding snap fit

©Golden Delicious Computers, 2011-2012. License: CC-BY-NC-SA.

7. carefully open the camera connector (take care of the resistors between socket and the “Wi2Wi“ GPS module!)

©Golden Delicious Computers, 2011-2012. License: CC-BY-NC-SA.

the brown part slides out horizontally but can be moved upwards

8. insert the flexible PCB of the camera module into the socket

©Golden Delicious Computers, 2011-2012. License: CC-BY-NC-SA.

9. start to close the brown lever

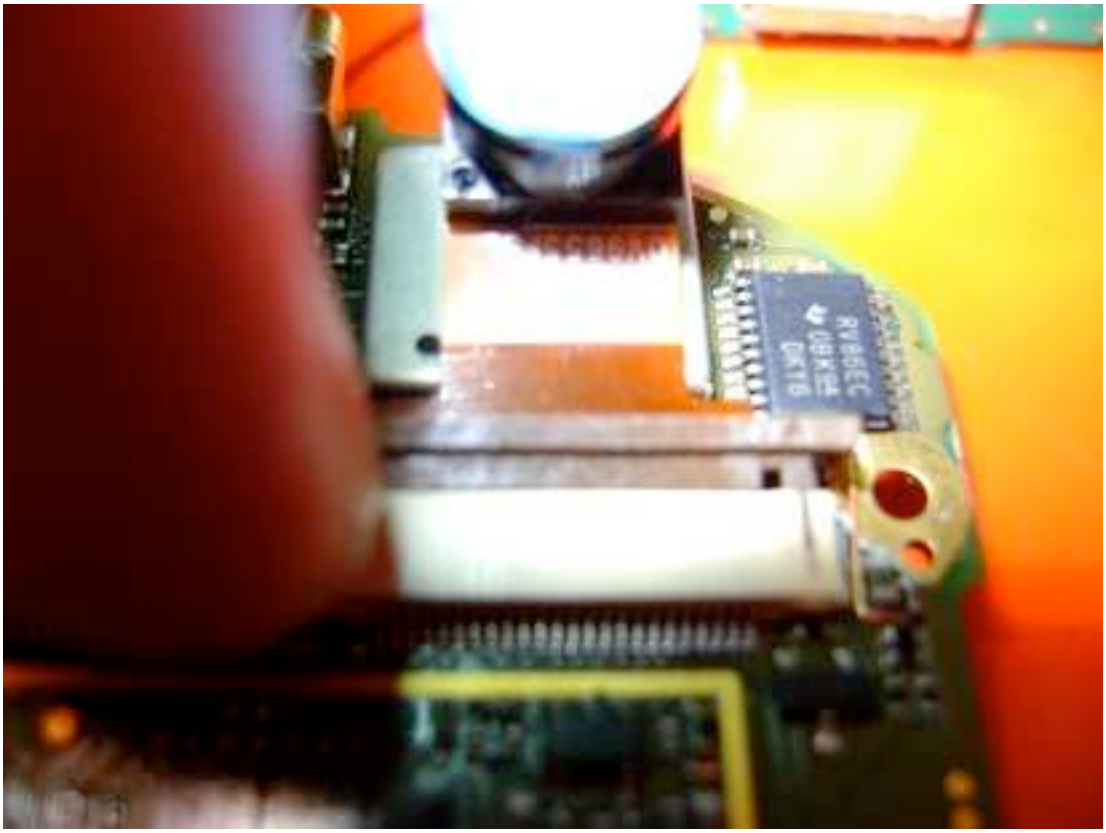

close it completely (by using fingers and not a tool)

©Golden Delicious Computers, 2011-2012. License: CC-BY-NC-SA.

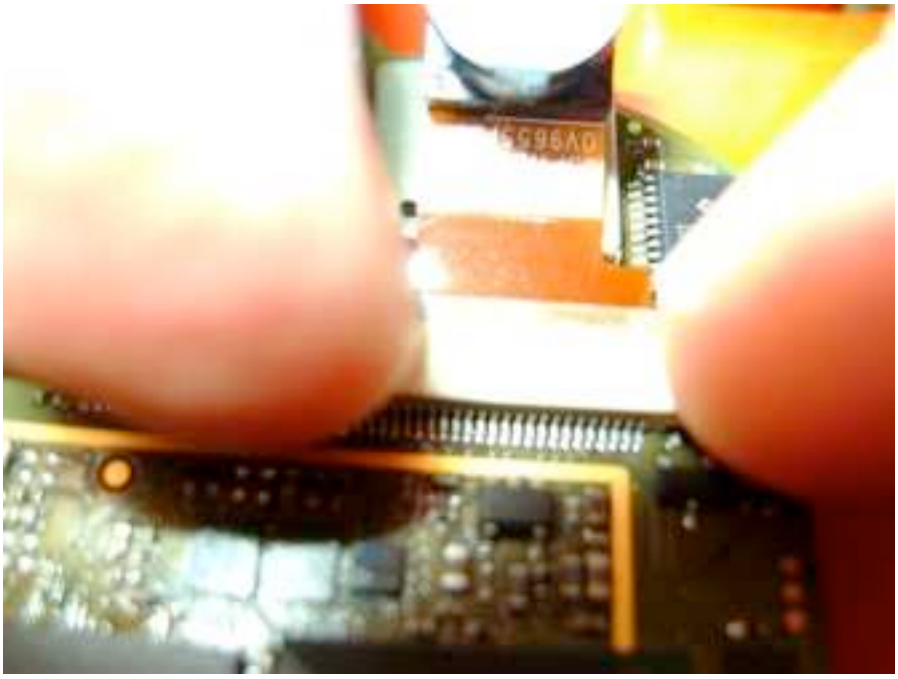

10. this picture shows how the PCB will be mounted

take care of the GPS antenna cable - it must pass between the GPS module (silver box) and the external antenna plug (golden)

©Golden Delicious Computers, 2011-2012. License: CC-BY-NC-SA.

11. insert the camera first (left), then the MMCX and finaly the USB socket (right). This must be done more careful than without camera or you may break off the MMCX socket.

12. finally insert the GPS antenna and check that the cable is not squeezed

©Golden Delicious Computers, 2011-2012. License: CC-BY-NC-SA.

©Golden Delicious Computers, 2011-2012. License: CC-BY-NC-SA.

6. Hardware description

6.1. Data Sheets

Component	Function	Links
DM3730CBP	CPU	http://focus.ti.com/docs/prod/folders/print/dm3730.html
MT29C4G96 MAZAPCJG-5 IT	PoP-NAND/ DRAM	more information under NDA only but: http://elcodis.com/parts/5204545/MT29C4G96MAZAPCJG-5_IT.html#datasheet
TPS65950	Power Controller / Audio Codec	http://focus.ti.com/docs/prod/folders/print/tps65950.html
W2SG0004	GPS	http://www.wi2wi.com/products/datasheets/W2SG0004_Datasheet_Rev1.81.pdf
W2CBW003	WLAN/BT	http://www.wi2wi.com/wireless.php WiFi: Marvell 8686 BT: UART HCI (more information under NDA only)
GTM601	WWAN	http://www.option.com/en/products/products/embedded-mobile-broadband/lgamodulegtm601-609/ (more info under NDA only)
TD028TTEC1	LCD	http://wiki.openmoko.org/wiki/TPO_TD028TTEC1
TSC2007	Touch Controller	http://focus.ti.com/docs/prod/folders/print/tsc2007.html
(LIS302)	Accelerometer	http://www.st.com/stonline/products/literature/ds/12726.pdf
HMC5883L	Compass	http://media.digikey.com/PDF/Data%20Sheets/Honeywell%20PDFs/HMC5883L.pdf
(LSM303)	Accelerometer / Compass	http://www.st.com/stonline/products/families/sensors/motion_sensors/lsm303dlh.htm
BMP085	Barometer	http://www.bosch-sensortec.com/content/language1/downloads/BMP085_DataSheet_Rev.1.0_01July2008.pdf
BMA180	Accelerometer	http://www.spezial.cz/pdf/BST-BMA180-DS000-03.pdf

©Golden Delicious Computers, 2011-2012. License: CC-BY-NC-SA.

Component	Function	Links
OV9655	Camera	http://www.surveyor.com/blackfin/OV9655-datasheet.pdf
ITG-3200	Gyroscope	http://invensense.com/mems/gyro/documents/PS-ITG-3200-00-01.4.pdf
Si4705/4721	FM Receiver/ Transceiver	http://www.silabs.com/pages/DownloadDoc.aspx?FILEURL=Support%20Documents/TechnicalDocs/Si4704-05-C40.pdf
TCA6507	LED driver	http://focus.ti.com/docs/prod/folders/print/tca6507.html
TFDU6301	IrDA	http://docs-europe.electrocomponents.com/webdocs/0ed1/0900766b80ed1faa.pdf
USB3322	USB-PHY	http://www.smsc.com/media/Downloads_Public/Data_Sheets/3320.pdf

6.2. Processor and Power

The processor part consists of a OMAP3530 + Package-on-Package RAM/Flash and the TPS 65950 Power Controller.

Chip	Interface	Connected to
OMAP	Camera	Camera Module and Test Points
	DSS	LCD (R=23-18, G=15-10, B=7-2, DE=0)
	RFBI	n/a
	S-Video out	Headset Jack (Composite only)
	HDQ/1-Wire	Battery ID
	I2C1	TPS65950 CNTL
	I2C2	Touch Screen, Sensors, FM Receiver
	I2C3	Test Points (reserved for DVI control)
	I2C4	TPS65950 Smart Reflex
	McBSP1	FM Transceiver PCM
	McBSP2	Audio TPS 65950 I2S
	McBSP3	Bluetooth PCM
	McBSP4	WWAN PCM
	McBSP5	LCD control (in GPIO bit-bang mode)

©Golden Delicious Computers, 2011-2012. License: CC-BY-NC-SA.

Chip	Interface	Connected to
	McSPI1	GPIOs for Board Version
	McSPI2	n/a
	McSPI3	available on test points (and B2B connector)
	McSPI4	n/a
	UART1	Bluetooth HCI
	UART2	GPS module (NMEA)
	UART3	RS232 console / IrDA
	HSUSB0	TPS 65950 ULPI <-> OTG
	HSUSB1	n/a
	HSUSB2	USB3322 <-> WWAN
	HSUSB3	n/a
	FSUSB1	n/a
	FSUSB2	n/a
	FSUSB3	n/a
	MMC1/SDIO1	SD slot (4 bit)
	MMC2/SDIO2	WLAN module (SDIO 4 bit)
	MMC3/SDIO3	MMC2 direction control
	ETK	n/a
	JTAG	on test points
	STDI	n/a
	HWDBG	n/a
	GPT11/GPIO57	LED Backlight enable (PWM)
	BOOT5/GPIO7 (Mode 4)	AUX-Button
	more GPIOs	used to control subdevices and receive interrrups (see separate table)
TPS	Control	I2C1
	Smart Reflex	I2C4

©Golden Delicious Computers, 2011-2012. License: CC-BY-NC-SA.

Chip	Interface	Connected to
	JTAG	on test points
	TDM Codec Interface (I2S)	McBSP2
	Voice PCM Interface	WWAN PCM/McBSP4
	Bluetooth PCM Interface	n/a
	OTG	HSUSB0-ULPI
	Keyboard	n/a
	MIC.Main (2.2k bias)	Microphone
	MIC.Sub, AUX	n/a
	HS.MIC (2.7k bias)	Headset jack
	EAR	Earspeaker
	HSOR/HSOL	Headset jack
	IHF.LEFT/IHF.RIGHT	Music speakers (left channel only for Neo1973)
	VIBRA (LEDA, LEDB)	Vibramotor
	ADC7	Headset Mic / Remote Control current sense
	PWRON	PWR-Button, WWAN-Wakeup, PENIRQ
	GPIO0,1,16,17	n/a
	VMMC1 (3.15 V, 220 mA)	SD power
	VMMC2 (3.15 V, 100 mA)	n/a
	VAUX1 (3 V, 200 mA)	not used (available Extension)
	VAUX2 (2.8 V, 100 mA)	for Sensors
	VAUX3 (2.5 V, 200 mA)	Camera
	VAUX4 (3.15 V, 100 mA)	WLAN / Bluetooth power
	VSIM (2.8 V)	int/ext. GPS antenna
BT	PCM	McBSP3 (I2S mode)
	UART	UART1
	USB	(Test Points)

©Golden Delicious Computers, 2011-2012. License: CC-BY-NC-SA.

Chip	Interface	Connected to
	Power (3 - 3.6 V, 55 mA)	VAUX4
WLAN	SDIO/GSPI	MMC2/3 (4 bit)
	Power (2.7 - 3.3 V, 240 mA)	a LDO controlled by VAUX4
WWAN	PCM	McBSP4 (I2S mode)
	USB	HSUSB2
	Wakeup Module	-
	Wakeup CPU	GPIO176
	Power	VBAT
LCD	RGB, SYNC	DSS
	Control Interface	McBSP5 (GPIO bitbang mode)
	Power (2.8 - 3.3 V, 20 mA)	3.3V LDO (controlled by SYSEN)
	Backlight Enable/PWM	GPT11 (GPIO57)
Touch	I2C	I2C2
	PENIRQ	GPIO160
	AUX (ADC channel 6)	Ambient Light Sensor
	Power (2,7 - 5,5 V, 3 mA)	3.3V LDO (controlled by REGEN)
SD/SIM	SD	MMC1
	Power (SD)	VMMC1 (3.15V, 220 mA)
	SIM	WWAN
	Power (SIM)	WWAN
	Memory on SIM (1-bit SD)	n/a
GPS	Serial	UART2
	Power Up	GPIO145 (RTS inverted)
	INT/EXT-Antenna Status	GPIO144 (CTS)
	Power (3.25 - 3.6 V, 50 mA)	3.3V LDO (controlled by REGEN)
	int/ext. Antenna (3 V, 20 mA)	VSIM
LED	Aux, Power LEDs	I2C2
RS232	RX, TX, CTS, RTS	UART3

©Golden Delicious Computers, 2011-2012. License: CC-BY-NC-SA.

Chip	Interface	Connected to
	Power	3.3V LDO (controlled by REGEN)
IrDA	RX, TX	UART3 (needs to be programmed to IrDA mode for correct pulse shaping)
	On/Off	GPIO13
	FIR mode	GPIO21
	Power (2.7 - 3.6 V, 5 mA)	3.3V LDO (controlled by REGEN)
	LED Power (400 mA peak)	VBAT
FM Receiver	Control	I2C2
	Voice	McBSP1
Sensors	Accelerator, Compass, Barometer, Gyroscope	I2C2
	Interrupts	GPIOs (see table)
	Power (2.5 - 3.3 V, 2.5 mA)	VAUX2

6.3. RS232, DC-In and IrDA

6.3.1. RS232 connector

The RS232 includes a 3-15 V level shifter. It supports RX, TX, CTS, RTS of UART3 (compatible to BeagleBoard and the-ROM boot loader).

The RS232 connector is located at the top end of the PCB. It has been designed that you can connect even to a running device after removing the battery cover (but not the battery), opening the Torx screws and removing the front cover:

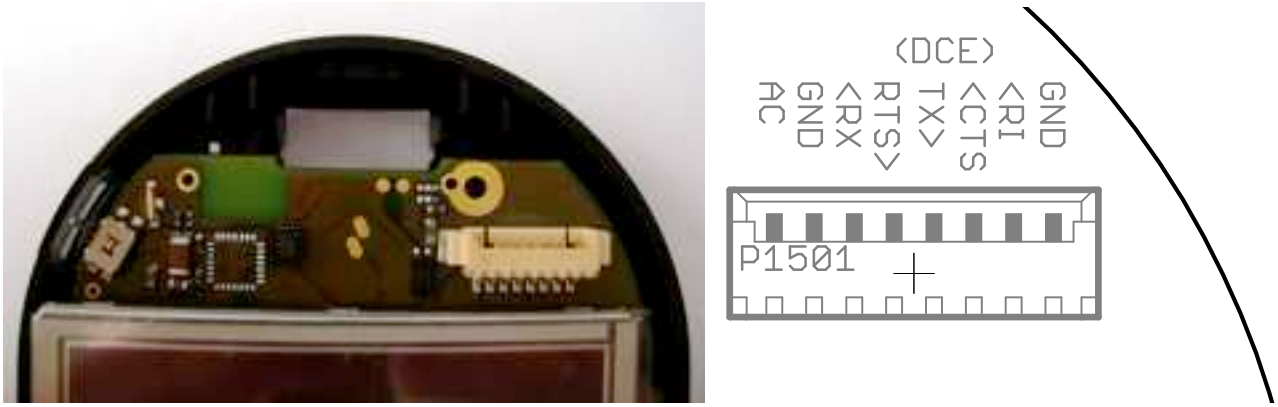

NOTE: the interface is named as a DCE (Modem)! Therefore you should connect a DB9f (officially called DE9) socket that directly plugs into a DTE (Terminal/Computer).

NOTE: This assignment does not require a Null-Modem cable.

©Golden Delicious Computers, 2011-2012. License: CC-BY-NC-SA.

Pin location and signals:

Pin	DCE pin name	UART3 (mode0)	GPIO (mode4)	Dir.	Color (in our presoldered cable)	DB9f pin number
1	GND	-	-	-	brown	5
2	EXT	-	21	Out	red	1 (DCD) or 4 (DTR) or 9 RI (our cable)
3	CTS	RTS	164	Out	orange	8
4	TX	RX	166	In	yellow	3
5	RTS	CTS	163	In	green	7
6	RX	TX	165	Out	blue	2
7	GND	-	-	-	purple	-
8	DCIN	-	-	In	grey	-

6.3.2. Building a cable

The connector on the GTA04 is a “Molex Pico blade“ with 8 pins (53261-0871). We recommed that you get a plug where a cable is already crimped since doing that manually requires quite expensive tools.

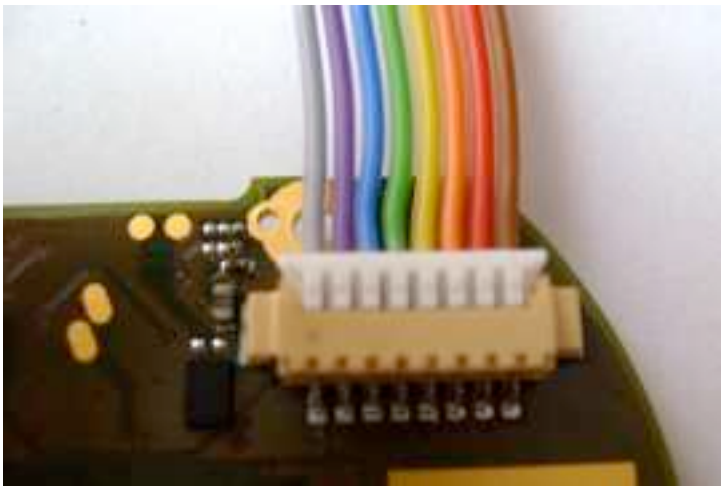

On the other end you need to solder to a DB-9f socket.

©Golden Delicious Computers, 2011-2012. License: CC-BY-NC-SA.

There is an additional signal line EXT which can be connected to DCD, DTR or RI to indicate modem status by software. Which one you choose depends on your application. It is controlled by GPIO21.

6.3.3. DC-In

The DC power supply pins (see section 5.14) are not connected by default but you can wire them for a Y cable by soldering a plug of your choice. Please make sure that you don‘t swap DCIN and GND as it will damage the device.

DCIN power input is rated 3.2 V - 6.8 V (absolute maximum).

6.3.4. IrDA

There is an IrDA transceiver capable of 4 MBit/s that can be used alternatively with the RS232 port and must be switched on by software.

To generate IrDA transmit impulses, firstly switch the PinMux to IrDA mode and place UART3 into IrDA mode. To generate arbitrary infrared impulses, place the TX line (GPIO166) into GPIO mode (4).

Receiver speed (SIR/MIR vs. FIR) controlled through a specific sequence of TX and IrDA enable (see data sheet of the IrDA module).

6.4. WWAN (GSM, GPRS, EDGE, UMTS)

The WWAN and Telephony module is a Option GTM601W UMTS & GSM.

It is connected to the internal USB for control channels (AT command interface) and WWAN data.

Telephony voice is transmitted digitally through a PCM interface (module generates 2.048 MHz clock and 8kHz frame sync) connected to McBSP4.

A GPL Driver is avaliable by Option and is part of the mainstream Linux kernel since 2.6.31.

6.4.1. Power on/off and Reset

Power is controlled through GPIO186. Setting the GPIO to “1“ (for at least 200 ms) turns the module on and it will register itself on the internal USB port. Setting the GPIO to 0 and 1 again prepares for power-down[5] and the final edge going to 0 turns the module off. In that state it draws <100 uA and can be waked up by another switch to 1.

[5] in this case the “1“ disables the PA (similar to airplane mode) but the module remains active through USB.

©Golden Delicious Computers, 2011-2012. License: CC-BY-NC-SA.

Therefore these pulses should be 0-1-0 for approx. 300 ms.

If the USB interface is shut down but remains active, the module goes to low power mode (typically 3-10 mA) and can wake up the CPU through a 3G_WOE interrupt.

Note: if the CPU is powered down through the emergency function (Power button pressed for >8 seconds) the module may remain powered on, although everything else is off. Although it typically draws only 3-10 mA it may try to re-register to the network and in certain conditions (signal received from the base station is better than the own transmitted signal) it may draw up to 100 mA and send GSM bursts while unsuccessfully trying to re-register to base stations.

It should be possible to handle that by some U-Boot hack (U-Boot starts but shuts down after release of the Power button).

6.5. GPS

6.5.1. Receiver

The GPS receiver is a Wi2Wi W2SG0004 module connected to UART2 (/dev/ttyO1).

The data rate (after reset): 9600 bit/s, 8 bit, no parity, 1 stop bit; range: 1200 - 115200 bit/s

Data formats are NMEA (default), SiRFBINARY™ and AI3/F.

6.5.2. External antenna and switch

The device automatically switches between internal and external antenna. The selection of the active antenna can be read through GPIO144 (0=int, 1=ext).

The external antenna connector is a MMCX type plug. Please make sure that your antenna has the correct type (or you need an adapter).

The device provides 3 V up to 25 mA for an external active antenna. The antenna must draw at least 10 mA for correct detection.

6.5.3. Power on/off and Reset

Reset (and power down) is controlled by GPIO145. A first impulse powers on and a second impulse powers down.

6.6. WLAN & Bluetooth

WLAN and Bluetooth are provided by a Wi2Wi W2CBW003-003.

6.6.1. WLAN

is connected to MMC2 (4 bit SDIO interface).

6.6.2. Bluetooth

is connected to UART1 (/dev/ttyO0). The PCM channel is connected to McBSP3.

6.6.3. Power on/off and Reset

Power is supplied for both parts through VAUX4.

Reset is controlled by the LED6 port of the TCA6507 connected to I2C2. You should issue a reset before switching on power.

6.7. FM Receiver / Transmitter with RDS

There is a FM Receiver Si4705 (or combined receiver/transmitter Si4721) available.

©Golden Delicious Computers, 2011-2012. License: CC-BY-NC-SA.

The shield cable of the headset is used as the FM receiver antenna.

The transmitter needs a separate antenna.

It is controlled through I2C2.

Digital audio is provided through McBSP1.

6.8. Touch Screen and LCD

6.8.1. LCD DSS

The LCD module is a Toppoly TD028TTEC1 connected to the DSS port.

DSS signal	Display
DSS2-7	Blue (6 bit)
DSS10-15	Green (6 bit)
DSS17-23	Red (6 bit)

PCLK shall be 22 MHz

6.8.2. LCD controller

The display module contains an integrated Toshiba JBT6K74 display controller for which no detailled information is available. Its control port is connected to McBSP5 which is used as GPIO.

Our U-boot and Linux kernel include drivers to control the McBSP5 in GPIO-bitbang mode. This has been ported from the GTA01/GTA02 kernel source code and just works.

6.8.3. Touch screen

The resistive touch screen is controlled by TSC2007 that is connected to I2C2.

The TSC2007 can measure the touch screen position and pressure, as well as battery voltage and chip temperature (see data sheet). It includes a Median Filter to reduce jitter.

6.8.4. Ambient Light Sensor (DIY)

there is room for an optional ambient light sensor connected to the.AUX input (ADC channel 6) of the TSC2007 can be used to read out the ambient light level. Installation of such a sensor requires drilling a hole into the case.

NOTE: the solder pads have a 2mm distance which is quite rare but saves space. Please be careful when soldering a sensor, especially if it has 2.54mm pin distance

Some sensors (not tested for mechanical fit):

Vishay TEPT4400 3mm

Vishay TEPT5500 5mm

Vishay TEPT5700 5mm

Panasonic AMS104Y

6.9. Sensors

are connected to the I2C2 bus.

©Golden Delicious Computers, 2011-2012. License: CC-BY-NC-SA.

There is either mounted a LSM303DLH or both HMC5883+BMA180, never all of them. Otherwise there would be address conflicts and multiple drivers for the interrupt lines. Which devices are available may change.

The table below shows the I2C addresses and the interrupt GPIOs. It also includes other devices on the I2C2 bus (although they are not sensors):

Sensor	Type	Bus address	Interrupt
optional Accelerometer (bottom)	LIS302	0x1D	GPIO114
Barometer/Thermometer	BMP085	0x77	GPIO113
Gyroscope	ITG3200	0x68	GPIO56
FM Transceiver	Si4705/4721	0x11	GPIO156
Touch Screen Controller, Ambient Light	TSC2007	0x48	GPIO160
Accelerometer (top)	BMA180	0x41	GPIO115
Compass	HMC5883L	0x1E	GPIO112
optional Combined Accelerometer	LSM303DLH	0x19	GPIO115
optional Combined Compass		0x1E	GPIO112
LED driver	TCA6507	0x45	-
Torch/Flash LED driver	TPS61050	0x33	-
Camera module	OV9655	0x30	-
RFID-EEPROM	MT24LR64	0x50	-
optional Keypad controller	TCA8418	0x34	GPIO10

6.10. Headset Jack 2.5mm

6.10.1. Pin layout

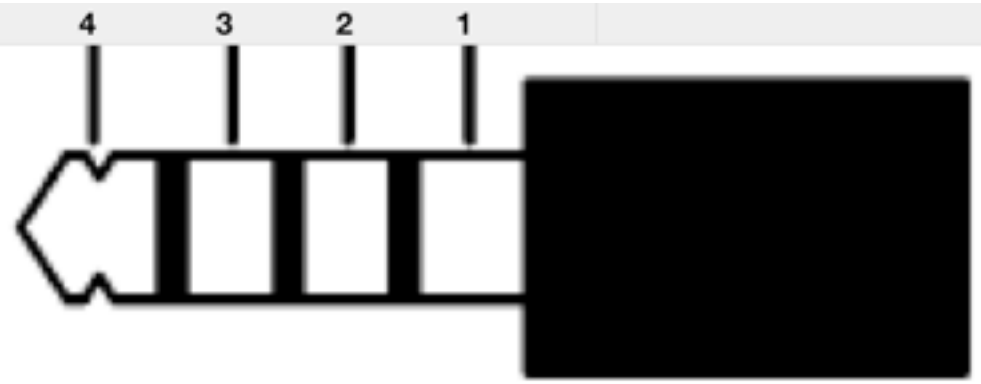

The pin assignment (not necessarily the diameter) we have choosen is compatible to e.g.:

- Sharp Zaurus SL860

©Golden Delicious Computers, 2011-2012. License: CC-BY-NC-SA.

- iPod
- iPhone 2G
- 2.5mm AV-Chinch cables (white, red, yellow)

Pin	Name	Function	Alternate AV function (by SW configuration)	AV-Chinch cable
4 (tip)	L	Left Headset	Left Audio In	white
3	R	Right Headset	Right Audio In	yellow
2 (ring)	GND	Shield	Antenna input for FM-Receiver	(shield of all 3 ends)
1 (inner end)	AUX	Microphone & Accept Call button	75Ω Composite Video Out (PAL/NTSC)	red

A 3-pin headset has rings 1+2 connected, i.e. grounds the microphone input / video output permanently.

A 2-pin connector (mono) has rings 1+2+3 connected.

Notes:

- there are cables and headsets which have AUX and GND swapped compared to our assignment.
- and others may even swap more. E.g. the original Openmoko headset has the AUX signal on the tip (pin 4).
- You can solve this by buying or building an adapter cable.
- There are easy to get 2.5mm to 3.5mm adapters. E.g. Nokia AD-52.
- The shield of this cable can be used as the antenna input for the FM Receiver.

6.10.2. Microphone Current Sensor

Pin 1 provides a VHSMIC bias supply (2.5 V) through a 2.7 kOhm resistor. The current through this pin to ground is monitored and can be sensed through ADCIN7 of the TPS65950. This allows to detect several different resitances connected between pin 1 and 2.

Many headsets have a button that simply short-circuits the microphone to signal accepting or ending a call.

A Composite Video system can be detected by exhibiting a 75 Ohm resistance.

A Headset or remote control with several buttons and resistors can be used to indicate more different levels and e.g. provide remote signals like Play, Forward, Backward, Pause etc.

NOTE: this feature has not been verified to work.

Typical voltage levels:

Situation	Resistance	Voltage
open (no headset)	infinite	0V

©Golden Delicious Computers, 2011-2012. License: CC-BY-NC-SA.

Situation	Resistance	Voltage
3-pin headset	0 Ohm (permanent)	2.5V
4-pin headset	2.2 kOhm (Microphone)	
button on 4-pin headset pressed	0 Ohm (temporary)	2.5V
AV-monitor on red cable	75 Ohm	
buttons/keys	100 Ohm .. 2 kOhm or 3 kOhm ... 50 kOhm	

6.10.3. Composite-Video Out

The composite out is driven by a OPA362 video amplifier with a series 75 Ohm resistor. This gives a standard FBAS / CVBS output signal with approx. 1.25 V amplitude.

The TV out can be enabled through the DSS2 system. It is important that the TV_OUT_BYPASS is enabled.

The output amplifier can be switched to High-Z by setting GPIO 23 to 0.

6.10.4. AUX-In

It is possible to switch off the Headset audio out drivers by setting GPIO55 to 0. In this situation, you can feed a stereo audio signals through the headset jack into the device for recording.

NOTE: this feature has not been tested.

6.11. Phone Peripherals

Speakers, Microphone, and Vibracall are connected directly to the Codec part of the TPS65950.

6.12. OTG-USB

is a USB OTG 5 pin connector and connected to the TPS65950. The OMAP3 CPU uses the MUSB controller HSUSB0 and ULPI to drive the TPS.

The socket is used to

- charge battery in Client mode
- supply 5V, up to 100 mA in Host mode

6.13. Memory Cards

MMC1 interface (data bits 0-3) is connected to the SD card slot and supports SDHC up to 32 GByte

MMC2 interface (data bits 0-3) is connected to the WLAN module (SDIO mode)

MMC3 interface is not available (pins are used for the MMC2 SDIO driver)

6.14. Buttons and LEDs

©Golden Delicious Computers, 2011-2012. License: CC-BY-NC-SA.

6.14.1. AUX Button

is connected to BOOT5 so that pressing the button while booting modifies the boot sequence of the built-in boot loader. I.e. NAND is tried last.

You can detect the state by programming the BOOT5 pin to mode 4 (GPIO7) and reading its value.

6.14.2. Power Button

is connected to PWRON of the TPS65950.

The TPS65960 detects and debounces this signal and can either generate interrupts on pressing or releasing, or wake up a sleeping CPU or force power-off when pressed for more than 8 seconds (emergency shut-down).

The current state can be read throgh I2C1 from the STS_HW_CONDITIONS register of the TPS65950.

6.14.3. LEDs

The LEDs in the AUX and Power Buttons are controlled by the TCA6507 on address 0x45 on I2C2. See the datasheet how to control the LEDs, e.g. make them light or blink.

Assignment:

Port number	LED Button	LED Color
P0	AUX	red
P1	AUX	green
P3	Power	red
P4	Power	green

The other outputs P2, P5 are reserved for future devices. But they are available on test pads and the expansion connector.

P6 is used to control the reset of the WLAN and Bluetooth module.

6.14.4. Torch and Flashlight LED (optional)

Some boards may provide a TPS61050 Torch and Flash light LED controller. There is no LED installed.

NOTE: this feature has not been tested.

6.14.5. Keyboard controller (optional)

There is room for a TCA8418 button keyboard controller option but it is not soldered.

NOTE: this feature has not been tested.

6.15. RFID-EEPROM (optional)

There is a MT24LR64 connected to I2C2. It can simply be used as a EEPROM. Or, by connecting and matching a 13.56 MHz antenna, the EEPROM can be read and written as a RFID tag. Even if the GTA04 is completely powered off.

This feature can be used for different purposes. E.g. device serial numbers, ticketing, electronic payment, door-openers that work even with a completely drained main battery.

NOTE: this feature has not been tested.

©Golden Delicious Computers, 2011-2012. License: CC-BY-NC-SA.

6.16. Camera (optional)

The camera connector is designed to connect a OmniVision OV9655 camera module.

NOTE: this feature is not completely supported by the kernel.

6.17. Test Pads

Note: adding electronic circuits in this area will most likely void the CE, R&TTE and FCC approvals, so you may operate the device only in a development environment or you have to recertificate the device yourself.

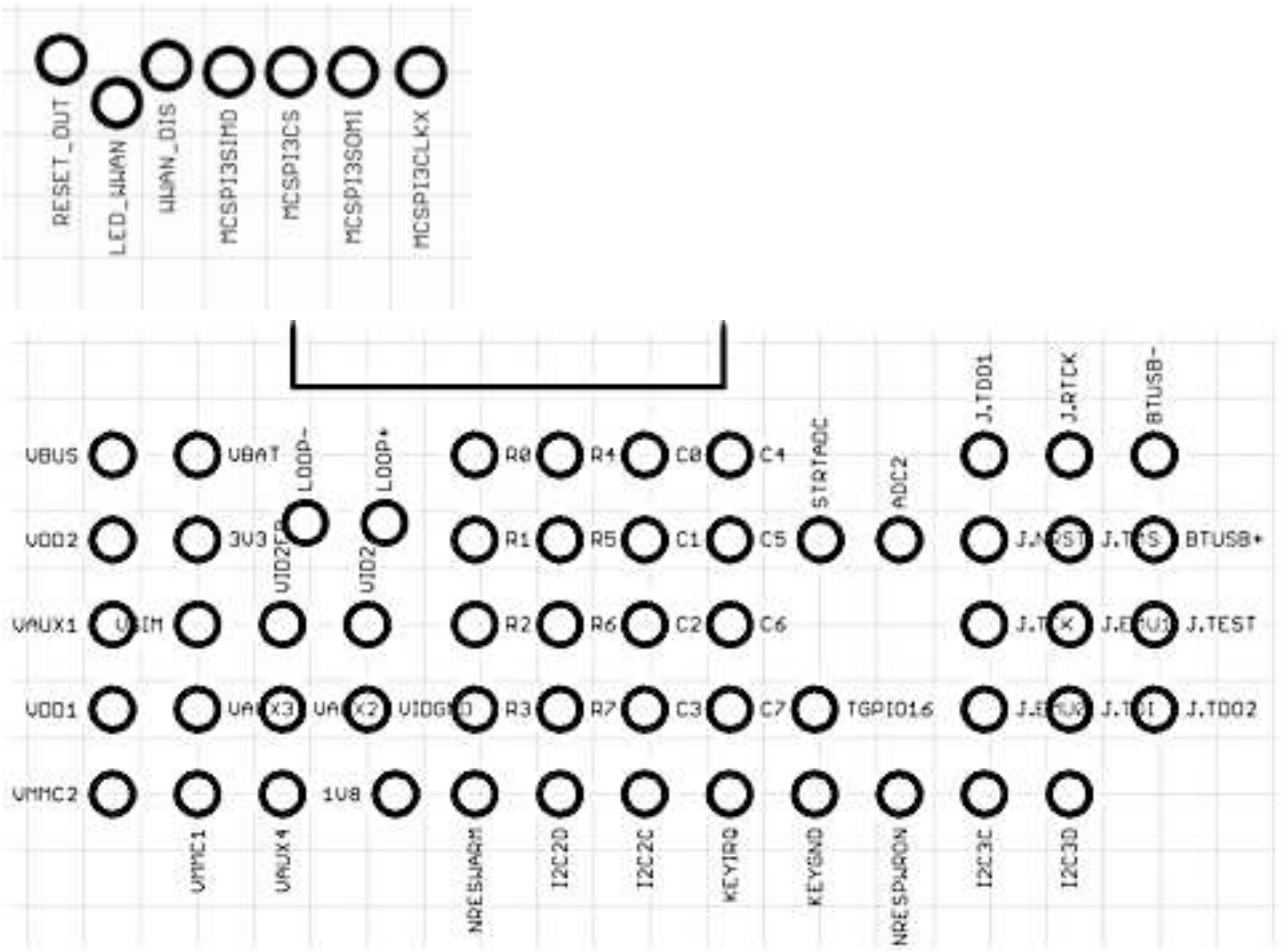

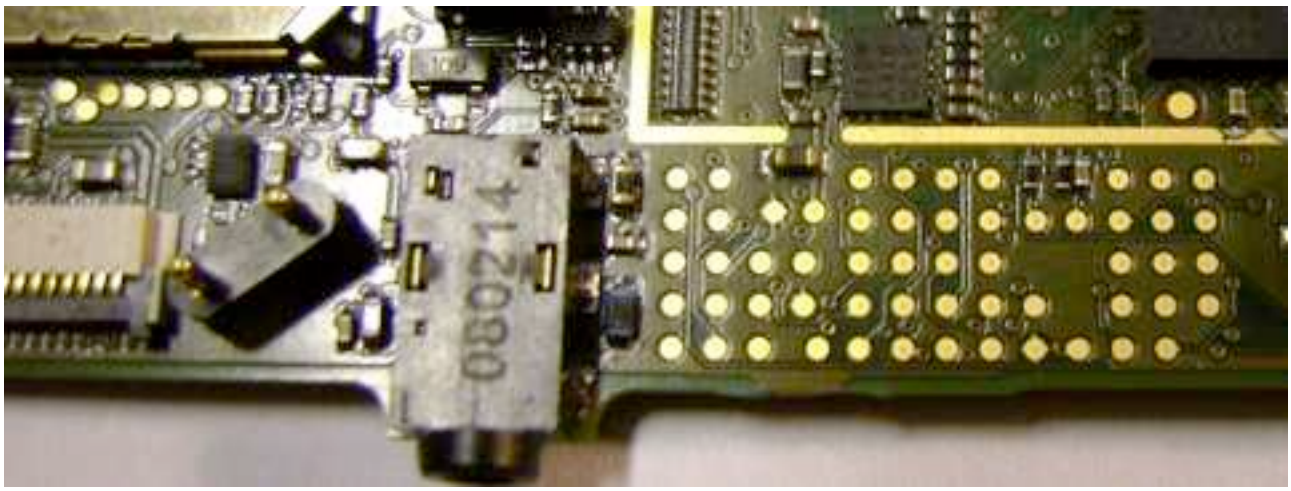

Please be aware that logic levels are 1.8V! Applying 3.3V signals may damage the OMAP subsystem beyond repair!

Pin description:

Name	Use for	Comment
VBUS	measurement	USB (0V or 5V)
VDD2	measurement	powers CPU core
1V8	supply 1.8 V	
VDD1	measurement	powers CPU core
VMMC2		
VBAT	battery voltage	don‘t short circuit!
3V3	supply 3.3V	
VAUX1	free to use	
VAUX3	Camera voltage	should be 2.5V
VMMC1	measurement	controlled by MMC driver
LOOP+, LOOP-	FM TX antenna	only useful for Si4721
VSIM	supply ext. GPS antenna	
VAUX2	used as secondary supply of Compass and Gyroscope chip	Never switch below 1.8V or the ITG3200 may be damaged.
VAUX4	WLAN/BT voltage	
VID2, VIDGND	don‘t connect	
R0-R7, C0-C7	optional keypad	needs keypad controller chip
STARTADC2, ADC2	ADC input	grounded by 0R! see TPS65950
I2C2D, I2C2C	additional I2C devices	Bus is already crowded!
I2C3D, I2C3D	additional I2C devices	completely unused
J.*	if you ever need JTAG	1.8V logic!
J.TDO1, J.TMS	GPIO or Card Detect	GPIOs of the TPS65950 (needs I2C1 commands to control them)
NRESWARM	reset external devices	1.8V logic!

©Golden Delicious Computers, 2011-2012. License: CC-BY-NC-SA.

Name	Use for	Comment
KEYIRQ	connect external interrrupt	1.8V logic! GPIO176
MCSPI3-*	connect external SPI device	1.8V logic!

6.18. Battery holder (optional)

For experiments it is sometimes necessary to operate the device completely without a case. This setup does not provide a battery bay and the spring loaded battery contacts will push away the battery. We have added two holes where you can simply insert a bent paper clip as shown in the photo. This will keep the battery in place.

6.19. Expansion Connector (optional)

There is space on the Display side where two Board-2-Board connectors can be installed - if there is no display.

©Golden Delicious Computers, 2011-2012. License: CC-BY-NC-SA.

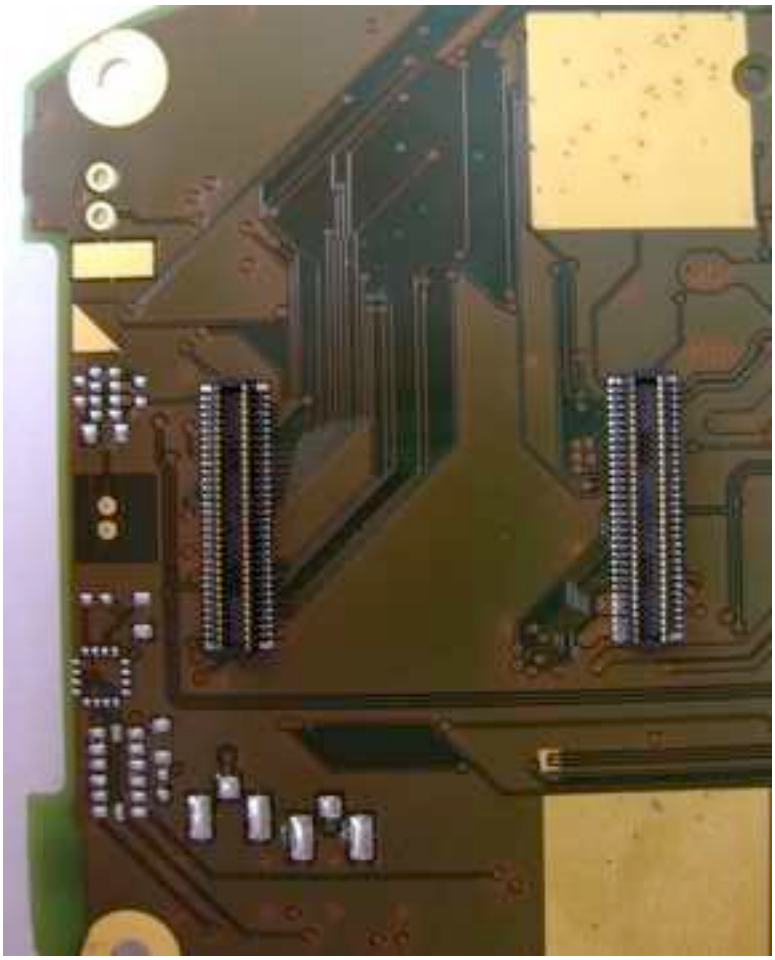

Please contact us if you want to get boards with these connectors installed and some other components not populated (e.g. microphone, display connector, headset jack, USB-OTG port, battery connector).

These connectors allow to replace the original display and install an adapter board for a different display. These connectors also provide other signals so that the GTA04 board can be used as a module to design your own phone (will have to be larger of course). A cross section showing how to mount the GTA04 onto an adapter board with display is shown here:

©Golden Delicious Computers, 2011-2012. License: CC-BY-NC-SA.

6.19.1. Connecting an external LCD

Note that your display may need level shifters from 1.8V logic to 3.3V levels. This can be done e.g. with a set of SN74LVC8T245 chips.

You also have to design your own backlight converter (TPS61041) and touch screen controller (e.g. TSC2007).

Some more signals and interfaces are available depending on population of components on the module.

6.19.2. Part numbers

The GTA04 board can be equipped with two receptacles Hirose DF40-60DS-0.4V.

NOTE: it is quite impossible to retrofit the expansion connector. And, it can also only be used if some other components (especially the display) are not populated. So please contact us for get this variant from the factory.

The matching Header is the Hirose DF40-60DP-0.4V (e.g. DigiKey H11839CT-ND). They come in either 1.5 mm or 2.0 mm or 2.5 mm matching height so that you can adjust the distance to your display board.

NOTE: this connector is specified for only 10 insertion cycles (gold plating wears out)!

6.19.3. Mounting material

It is recommended to use 3x M2x5 mm (or 4/6mm) plastic screws and M2 nuts. Depending on the B2B connector height, distance rings of 1.5 / 2 / 2.5 mm and 2.1-2.3 mm diameter should be used.

©Golden Delicious Computers, 2011-2012. License: CC-BY-NC-SA.

6.19.4. Position of the connectors and mounting holes

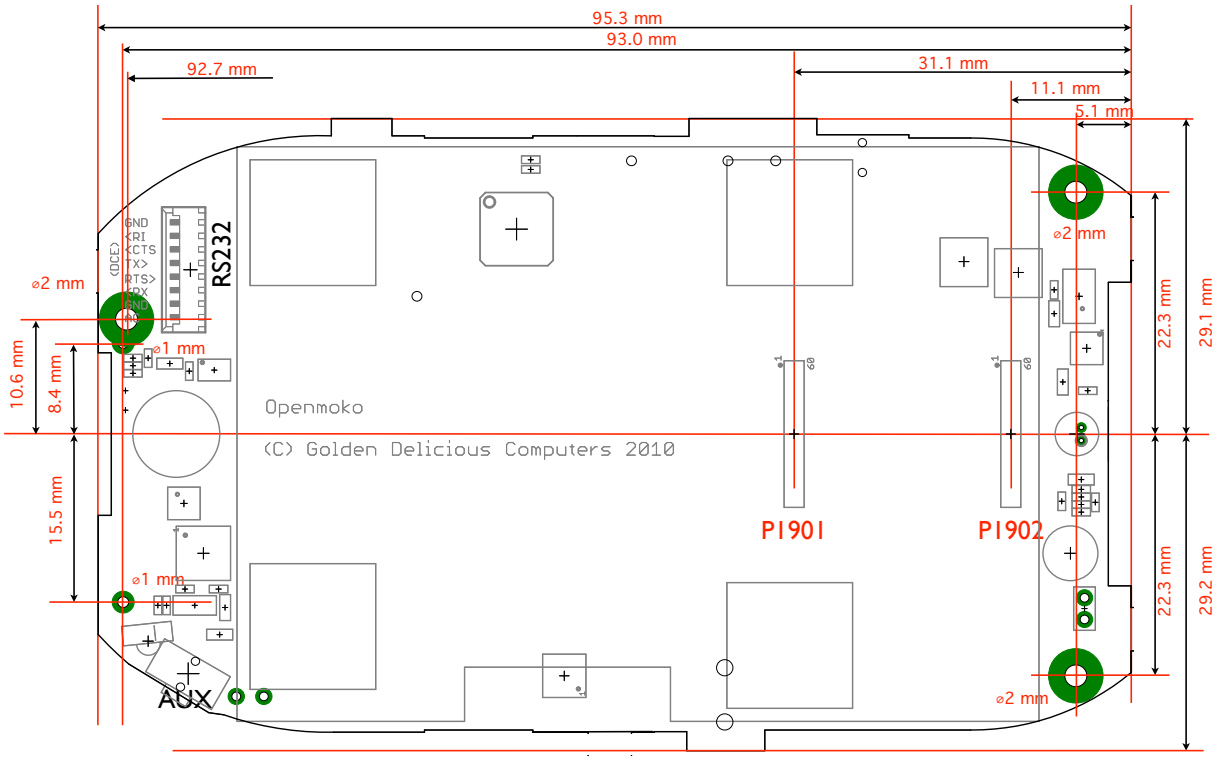

View on Display/B2B Connector side

6.19.5. Pin numbers

The photo below shows the pin positions. Please note when counting pin numbers, that each socket has 4 additional mechanical mounting pads that are grounded.

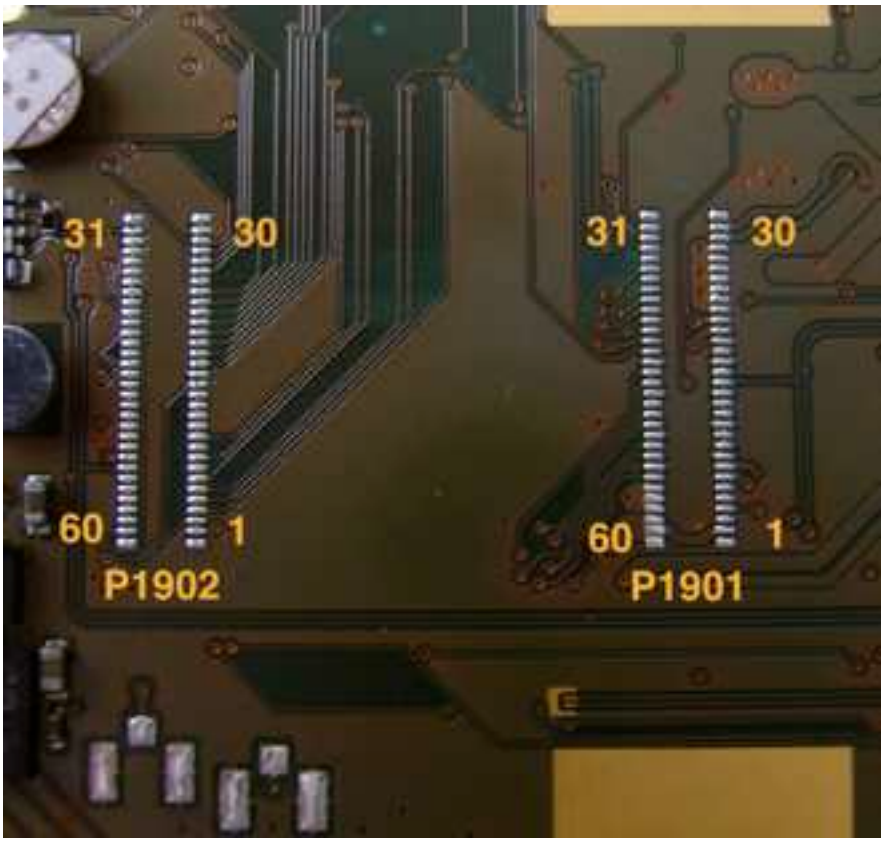

©Golden Delicious Computers, 2011-2012. License: CC-BY-NC-SA.

6.19.6. Signal assignment

P1901 (middle)

	Level	Pin	Pin	Level	
VAC	4-6 V	1	60	4-6 V	VAC
McBSP4-CLKX (GPIO152)	1.8 V	2	59	4-6 V	VAC
McBSP4-FSX (GPIO155)	1.8 V	3	58	5V	VBUS
McBSP4-DX (GPIO154)	1.8 V	4	57	5V	VBUS
McBSP4-DR (GPIO153)	1.8 V	5	56	5V	VBUS
VIB-	analog	6	55	analog	OTG ID
VIB+	analog	7	54		GND
GND		8	53	3.3 V	3V3
Ear+	analog	9	52	3.3 V	LED6 (3.3V-Reset)
Ear-	analog	10	51		GND
GND		11	50	analog	BATTEMP
HS/AUX-R	analog	12	49	analog	BATID
HS/AUX-L	analog	13	48	analog	ADCIN2
GND		14	47		GND
USB-OTG D+	analog	15	46	1.8 V	KEYIRQ (GPIO10)
USB-OTG D-	analog	16	45	1.8 V	STARTADC
GND		17	44		GND
HDQ	digital	18	43	1.8 V	UART2-RTS (GPIO145)
GND		19	42	1.8 V	UART2-CTS (GPIO144)
RS-	analog	20	41	1.8 V	PENIRQ (GPIO160)
RS+	analog	21	40	1.8 V	NRESPWRON
VBATT	3.6 V	22	39	1.8 V	REGEN
VBATT	3.6 V	23	38	1.8 V	I2C3-SDA
VBATT	3.6 V	24	37	1.8 V	I2C3-SCL
VBATT	3.6 V	25	36	1.8 V	UART3-TX (GPIO166)
VBATT	3.6 V	26	35	1.8V	UART3-RX (GPIO165)
VBATT	3.6 V	27	34	1.8 V	UART3-RTS (GPIO164)
VBATT	3.6 V	28	33	1.8 V	UART3-CTS (GPIO163)
LS-	analog	29	32		GND
LS+	analog	30	31	analog	MIC/AV

©Golden Delicious Computers, 2011-2012. License: CC-BY-NC-SA.

P1902 (bottom)

	Level	Pin	Pin	Level	
BKBATT	VBATT	1	60		GND
PWRON button (to GND)	VBATT	4	57	OC	LED5
McSPI3-CLK (GPIO17)	1.8V	5	56	OC	LED4
McSPI3-SIMO (GPIO14)	1.8V	4	57	OC	LED3
McSPI3-SOMI (GPIO15)	1.8V	5	56	OC	LED2
McSPI3-CS (GPIO16)	1.8V	6	55	OC	USB-WWAN-D-
AUX / USER button to 1V8 (GPIO7)	1.8V	7	54	OC	USB-WWAN-D+
1V8	1.8 V	8	53	3.3 V	3V3
I2C2-SDA	1.8V	9	52	1.8V	McBSP5-CLKX (GPIO12)
I2C2-SCL	1.8V	10	51	1.8V	McBSP5-FSX (GPIO19)
LED1	OC	11	50	1.8V	McBSP5-DX (GPIO20)
LED0	OC	12	49	1.8V	McBSP5-DR (GPIO18)
NRESWARM	1.8V	13	48	1.8V	GPT11_PWM (GPIO57)
UART2-RX (GPIO147)	1.8V	14	47	1.8V	DSS7 (GPIO77)
UART2-TX (GPIO146)	1.8V	15	46	1.8V	DSS8
GND		16	45	1.8V	DSS9
DSS23	1.8V	17	44	1.8V	DSS10
DSS22	1.8V	18	43	1.8V	DSS11
DSS6 (GPIO76)	1.8V	19	42	1.8V	DSS12
DSS5	1.8V	20	41	1.8V	DSS13
DSS4	1.8V	21	40	1.8V	DSS14
DSS3	1.8V	22	39	1.8V	DSS15
DSS2	1.8V	23	38	1.8V	DSS16
DSS1	1.8V	24	37	1.8V	DSS17
DSS0 (GPIO70)	1.8V	25	36	1.8V	DSS18
DE	1.8V	26	35	1.8V	DSS19
VSYNC	1.8V	27	34	1.8V	DSS20
HSYNC	1.8V	28	33	1.8V	DSS21
PCLK	1.8V	29	32		GND
GND		30	31	1.8V	MIC+

©Golden Delicious Computers, 2011-2012. License: CC-BY-NC-SA.

6.19.7. General Recommendations

Please follow these recommendations when designing a display board:

- Make the traces for power supply and battery connection as wide as possible.
- Connect all GND pins, as well as VAC and VBATT.
- The 1V8 and 3V3 lines can supply only some mA e.g. for level shifters or low power devices (e.g. touch screen controller). If you need more, use your own LDO.
- Shield the sensitive signals (BATTEMP, BATTID, ADCIN, Mic+/-, MIC/AV, etc.).
- Try to achieve 45/90 Ohm impedance for USB wires. This most likely needs to use a 4 layer design or you would get too wide traces (approx. 180% of the FR4 thickness).
- Keep traces for DSS short and approx. same length.

6.20. Power demand estimates

The exact current drawn by the submodules of the GTA04 board depends on the regulator type. For DC/DC regulators with approx. 95 % efficiency, the device draws less current for higher battery voltage. For LDO type regulators, the current is constant and may even drop for a very low battery (<3.4 V).

Most functional areas can be shut down completely. A standby current specification describes a state where the function is still operational or can be brought to operation within very short time.

NOTE: This table gives a preliminary overview and is not yet complete:

Unit	Standby (still active)	typ. Current / Voltage	typ. Power
CPU	uA	100 - 400 mA @ VBATT = 3.5V; depends on CPU clock	
MMC card	uA	50-100 mA @ 3.3V	
WLAN	10 mA	100-240 mA @ 3.3V	
BT	10 mA	30-50 mA @ 3.3V	
WWAN	3-10 mA	2 A @ VBATT	
Backlight	uA	100 mA @ VBATT	300 mW
GPS		50 mA @ 3.3V	
LCD		15 mA @ 3.3V	50 mW
IrDA	uA	150 mA @ VBATT (Tx) 2-3 mA @ 3.3V	
RS232	uA	10 mA	
TV out	-	50 mA	
Sensors	uA	uA	

©Golden Delicious Computers, 2011-2012. License: CC-BY-NC-SA.

Unit	Standby (still active)	typ. Current / Voltage	typ. Power
Gyroscope	uA	6.5 mA	
Camera	10 uA	20 mA @ 2.5V	

©Golden Delicious Computers, 2011-2012. License: CC-BY-NC-SA.

7. Booting the device

7.1. Boot process

When power is applied, the OMAP processor starts a first stage bootloader from a built-in ROM. This ROM tries to load a secondard bootloader (X-Loader) from several sources. The order can be changed by the AUX (User) button which makes the ROM check external sources (RS232, USB, MMC) before checking NAND flash.

The next stage boot-loader is the X-Loader (also called MLO if it loads U-Boot from MMC/SD). It runs from the (small) 64k SRAM built into the CPU.

Usually, the X-Loader fetches the thrid stage U-Boot from the same source as the X-Loader was found. I.e. there is a X-Loader in NAND flash that loads U-Boot from NAND flash. On a MMC card there is a file called MLO in the first FAT partition. A special X-Loader variant that can load U.Boot through the RS232 interface by using the Kermit protocol is also available.

Anyway, U-Boot is loaded into the (big) SDRAM.

Finally, U-Boot determines where to fetch the Linux kernel from. Usually it looks at NAND flash and MMC and finally on the UART. This order can be modified by pressing the AUX button to check the NAND flash as the last step. This is good to „unbrick“ a device where the NAND flash image is broken or damaged.

Our U-Boot loads a splash image from MMC or NAND:

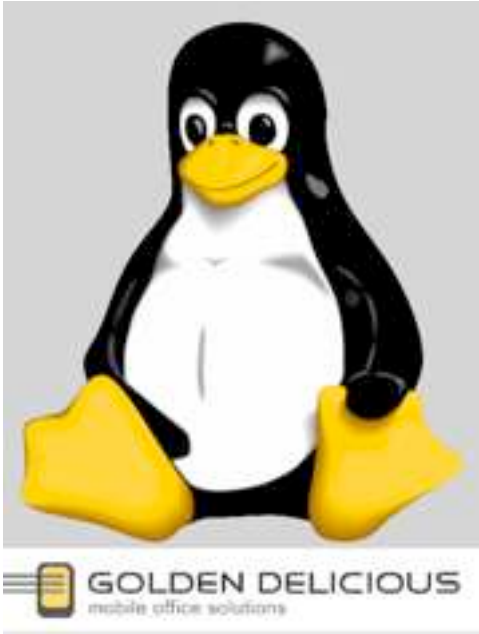

7.1.1. Choosing boot mode by AUX button

The AUX button is used to switch to „peripheral boot“ mode, i.e. all boot loaders try external media (MMC, USB, UART) before looking for a image in NAND flash.

In our U-Boot version, the AUX button also makes U-Boot load a different splash image showing several boot options. Boot order summary:

AUX not pressed	NAND -> USB -> UART -> MMC
AUX pressed	USB -> UART -> MMC -> NAND

©Golden Delicious Computers, 2011-2012. License: CC-BY-NC-SA.

7.1.2. Choose boot options by GUI

By pressing on the touch screen while in AUX boot mode, our U-Boot allows to choose from several boot options:

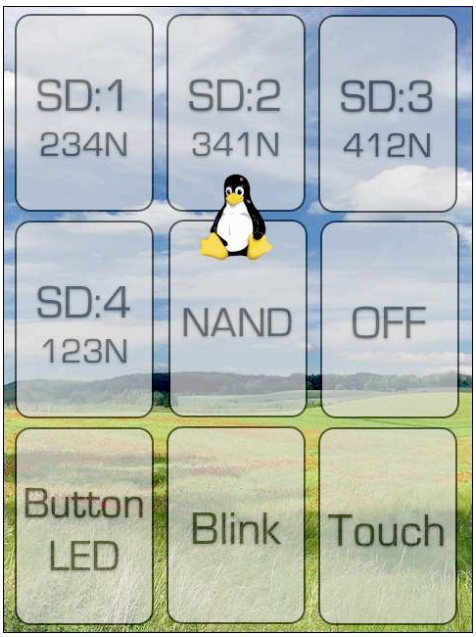

The image and the actions can be configured by the boot.scr script and by providing a different bitmap in RGB16 (565) format.

7.1.3. Multi-Boot

Using the boot options it is possible to have several different systems (e.g. QtMoko, SHR) on a single SD card.

The first 4 options select the kernel search order. E.g. SD:2 means that it is searched in partitions 2, 3, 4, 1 and finally falls back to NAND.

The logic is in pseudo-code

```
initialize bootargs for jffs2/NAND
for partition in bootorder
      if partition/ext/boot/uImage then assume rootfs
           on this partition and load kernel
      else if partition/FAT/uImage then assume rootfs
           on this partition and load kernel
      if partition/ext/boot/bootargs.scr then execute script
      else if partition/FAT/uImage then execute script
      if any was found then break
if no kernel loaded then load from NAND
boot kernel
```

This means a partition is bootable if it either has a uImage at the right place and/or a bootargs.scr (which can modify the bootargs variable passed to the kernel).

If you choose “NAND“, the bootorder list is empty, i.e. the SD card is skipped.

If a partition has neither a kernel nor a bootargs.scr it is skipped.

If no bootargs.scr are found the default is to assume that the root file system resides in the same partition as the kernel.

©Golden Delicious Computers, 2011-2012. License: CC-BY-NC-SA.

You can define a partition that boots with the kernel in NAND if you only provide bootargs.scr. This is needed for some special device variants where only the kernel in NAND knows how to correctly control the hardware.

A SD card with split FAT/ext partitions can still boot if the bootargs.scr tells the kernel (coming from the first FAT partition) to get the root file system from the second EXT partition.

7.1.4. How to boot from RS232

As a last resort, you can boot through RS232. Please see instructions on the wiki.

7.2. How to format a bootable SD/MMC card

must be 3.3 V compatible and 4 bit card

1. create partitions (ext3 recommended)
2. unpack your root-file-system
3. then copy a kernel (uImage.bin) and optionally bootargs.scr to /boot in the partition

It is not necessary to copy MLO, X-Loader, U-Boot etc. onto a SD card to make it bootable as long as the boot system in NAND is intact. If not, please search for the latest hw-validation image and place it on a SD card as described there. This may require a special formatting for the number of heads and cylinders.

Booting from this SD card with pressed AUX button will restore the boot system in NAND to a known state (but leaves the kernel and jffs2 in NAND unchanged).

7.3. Project and Bug Reports

There is a GTA04-X-Loader project hosted on our servers. Please look there for the latest overviews, documentation and source codes.

http://projects.goldelico.com/p/gta04-xloader

Please report Issues through:

http://projects.goldelico.com/p/gta04-xloader/issues/create/

©Golden Delicious Computers, 2011-2012. License: CC-BY-NC-SA.

8. U-Boot

We provide our own variant of U-Boot but you can easily replace it. So this description is only valid if you have installed our U-Boot in NAND or on SD card.

You can access U-Boot through the RS232 console in 115200 bit/s 8N1 mode.

Note, you must interrupt U-Boot by pressing the Return key before it starts executing the automatic boot commands.

8.1. New commands

To simplify testing and to provide the graphical boot menu we have added some new commands to U-Boot. Please use the help command to identify them.

8.2. Configuring the Splash Screen

We have added a command to U-Boot by which you can map a memory area to the LCD. The area is rectagular 640x480 and is encoded in RGB565 (rgb16) format. I.e. you just need to load a file of 600 KBytes from the boot partition and set the framebuffer base address.

```
mmc init 0
fatload mmc 0 0x81000000 splash.rgb16
lcm fb 0x81000000
```

8.3. Configuring the Boot Menu

1. create a (new) RGB565 splash image
2. modify the if-decoder ladder in boot.txt
3. convert boot.txt to boot.scr by mkimage (part of u-boot source tree)

8.4. Memory layout

Here is a list showing which memory areas as they are seen from the U-Boot console.

from	to	size	
0x0000 0000	0x0fff ffff	256 MB (2 GBit)	NAND
0x0000 0000	0x0007 ffff	512 KB	X-Loader (flash image)
0x0008 0000	0x0025 ffff	2 MB	U-Boot (flash image)
0x0026 0000	0x0027 ffff	128 KB	U-Boot parameters written by saveenv
0x0028 0000	0x0067 ffff	4 MB	Kernel (flash image loaded by nandboot)
0x0068 0000	0x0fff ffff	250 MB	file system (jffs) etc.
0x4800 0000			internal peripheral registers
0x8000 0000	0x9fff ffff	512 MB (4 GBit)	RAM

©Golden Delicious Computers, 2011-2012. License: CC-BY-NC-SA.

from	to	size	
0x8200 0000			default Linux kernel load address

8.5. How to flash the NAND

Our U-Boot loads a boot.scr from NAND or MMC that has a special feature to flash the NAND:

1. copy the files (uboot.bin, uImage.bin, x-load.ift) to a MMC card
2. insert the SD
3. boot and break into U-Boot
4. start writing flash by this command

```
flash=yes; run bootcmd
```

The latest boot.scr automatically tracks its version number and flashes MLO and U-Boot if the version number has changed.

8.6. Tips & Tricks

8.6.1. Clearing the environment in NAND

Sometimes, you may want to wipe out the U.Boot environment so that it is reinitialized to the default in U-Boot on the next reboot:

```
nand erase 260000 20000
```

Then, do

```
halt
```

and reboot the device (don‘t issue a savenev!).

8.6.2. Bootdelay has been set to 0

in that case you have no time to break into U-Boot.

Solution: Press a key on the RS232 console while the X-Loader message is starting and before U-Boot has been loaded.

8.7. Building from Source code

Get sources by:

```
git clone http://git.goldelico.com/gta04-uboot.git
cd gta04-uboot
```

Build:

```
export ARCH=arm
make config_omap3_gta04
make
```

The result will be the file boot/u-boot.bin. Copy this file to the FAT partition of your SD card.

©Golden Delicious Computers, 2011-2012. License: CC-BY-NC-SA.

8.8. Project and Bug Reports

There is a GTA04-U-Boot project hosted on our servers. Please look there for the latest overviews, documentation and source codes.

http://projects.goldelico.com/p/gta04-uboot/

Please report Issues through:

http://projects.goldelico.com/p/gta04-uboot/issues/create/

©Golden Delicious Computers, 2011-2012. License: CC-BY-NC-SA.

9. Linux Kernel

We support two Linux Kernel variants:

a) hw-validation kernel based on 2.6.32 - aims at implementing and testing all hardware features

b) mainstream kernel (currently) on 3.4 - aims at upstreaming all necessary drivers

Kernels include all configuration and drivers for the GTA04.

For details see:

http://projects.goldelico.com/p/gta04-kernel/

9.1. Machine ID

The GTA04 has a official ARM machine ID:

http://www.arm.linux.org.uk/developer/machines/list.php?id=3019

Type ID:	3019
Machine name:	GTA04
Machine type:	gta04
Type macro:	machine_is_gta04()
Kconfig macro:	CONFIG_MACH_GTA04
Type identifier:	MACH_TYPE_GTA04
Directory suffix:	gta04

9.2. Kernel bootargs

The most confusing is the console argument.

The console UART is called ttyO2 (letter O).

9.3. Drivers

Some devices need special drivers that are not (yet) part of the mainline kernel. And, they may not be part of a standard configuration:

TCA6507	LED driver
Display	needs a panel driver in the OMAP/DSS subsystem
TSC2007	touch screen
Power Button	a special TWL4030 driver
AUX Button	a GPIO keyboard driver with just one key
Battery Charging	a special TWL4030 BCI driver
WWAN-USB	the PHY chip needs a special initialization patch
OV9655	camera driver
ALSA SoC	drivers for GTM601W, Si4721 PCM

NOTE: this list is not complete and may change

9.4. Kernel Modules

©Golden Delicious Computers, 2011-2012. License: CC-BY-NC-SA.

A kernel that builds in all required modules is approx. 3 MByte. This is no problem for the OMAP architecture and a fast MMC. But if you want to save some space, you can make more modules loadable.

NOTE: the USB ethernet gadget driver works only if compiled into the kernel

9.5. Root-Filesystem

We provide a Debian root file system with some preconfiguration (e.g. inittab, fstab, X11, touch screen, LXDE).

Please see:

http://projects.goldelico.com/p/gta04-rootfs/

You can also to configure and generate a matching Angstrom rootfs through Narcissus.

And the Openmoko Systems like SHR, QtMoko etc. are already being ported.

9.6. Building from Source code

Currently we have two branches:

hw-validation	a 2.6.32 kernel based on beagleboard code to address all hardware functions so that we know the hardware works.
master	a 3.x kernel aiming at making all our changes accepted by Linux.

Get sources by:

```
git clone git://projects.goldelico.com/gta04-kernel.git
cd linux-omap-2.6
```

Build:

```
export ARCH=arm export CROSS_COMPILE=arm-angstrom-linux-
gnueabi- # adapt to your toolchain
make distclean make omap3_gta04_defconfig make menuconfig
# only needed if you want to change the default
configuration make uImage
```

The result will be the file arch/arm/boot/uImage. Copy this file to the FAT partition of your SD card.

9.7. Project and Bug Reports

There is a GTA04-Kernel project hosted on our servers. Please look there for the latest overviews, documentation and source codes.

http://projects.goldelico.com/p/gta04-kernel/

Please report Issues through:

http://projects.goldelico.com/p/gta04-kernel/issues/create/

©Golden Delicious Computers, 2011-2012. License: CC-BY-NC-SA.

10. Device Drivers

10.1. GPS

use a serial driver on UART2 (/dev/ttyO1) with 9600 bit/s to see NMEA records.

10.2. Bluetooth

use serial interface based driver (HCI) on UART1 (/dev/ttyO0).

```
hciattach -n -s 3000000 /dev/ttyO0 any 3000000 noflow &
```

10.3. WLAN

needs an SDIO driver for the Marvel 88W8686 chipset. The libertas driver is compatible.

For Debian systems, add the contrib non-free archive and

```
apt-get install libertas-firmware wireless-tools
```

Please note that Debian Lenny does not provide the firmware (Squeeze and later does). Therefore, you have to download it directly from Marvell:

http://elinux.org/Libertas_SDIO

10.4. WWAN

10.4.1. Driver

needs an Option Globetrotter HSO driver which is now in Linux kernel (since 2.6.31) in drivers/net/usb/hso.c. To enable, set CONFIG_USB_HSO.

And make sure that your driver is new enough to support the module. To verify check for this line in drivers/net/usb/hso.c:

```
{USB_DEVICE(0x0af0, 0x8800)},
```

If not there, please add.

On some systems you have to

```
ln -s /usr/src /lib/modules/$(boardname -r)/build
```

The driver provides several communication channels as /dev/ttyHS0 ... ttyHS4. You can connect through e.g. minicom and issue AT commands. Usually, /dev/ttyHS3 accepts AT commands to control the modem.

10.4.2. AT commands

The basic AT command interface has been defined in GSM 07.07 (http://www.ctiforum.com/standard/standard/etsi/0707.pdf).

AT+CLAC lists most of the commands plus vendor specific extensions.

Command	Parameters	Function	Comments
_OAIR		aircraft mode	same function as +CFUN
_OBLS		show SIM, Call Lists and SMS status	
_OBSI		show base station information	
_OCHAP		enable/disable CHAP	
_OCTI		unsolicited reporting of cell type indicator	

©Golden Delicious Computers, 2011-2012. License: CC-BY-NC-SA.

Command	Parameters	Function	Comments
_OEANT		unsolicited reporting of antenna signal strength	0-5
_OEMM		check emergency mode status	initiated by AT+CDV=911
_OERCN		get PIN/PUK retry counter	
_OGSN		product serial number	same as +CGSN
_OHCIP		report HSDPA call in progress	
_OHWV		hardware version	
_ONCI		get neighbour cell information	list of nearby base stations
_OPATEMP		unsolicited reporting of power amplifier temperature	
_OPBM		enable/disable frequency bands	
_OPCMENABLE		enable voice PCM interface	for voicecalls
_OPCMPROF	0: handset 1: headset 2: speakerphone 3: bluetooth hs	PCM audio profile	controls internal filters
_OPDPP		set PAP/CHAP Security Parameters	
_OPON		prioritized operator name	
_OPONI		unsolicited reporting of prioritized operator name	
_OPSYS		choose GSM and or W(C)DMA acquistion order	
_ORESET		soft reset	/dev/ttyHS* may change!
_OSIMOP		show HPLNM operator name	
_OSQI		unsolicited reporting of signal quality indication	2*n-113 dBm
_OSRPE		show SIM status	
_OSSYS		unsolicited reporting of service	GSM / UTRAN / no service
_OUHCIP		unsolicited reporting of HSDPA call in progress	
_OUWCTI		unsolicited reporting of WCDMA cell type indicator	
_OWANCALL		start/stop data call	connect: =1,1,1 / disconnect: =1,0,1; HSO driver will automatically create/destroy an interface
_OWANDATA		get network data	result: IP, Gateway, DNS1, DNS2, NBS1, NBS2, Speed; should be used for an ifconfig
_OWANNWERROR		get WWAN network errors	
_OWCTI		WCDMA cell type indicator	
_OWIND		unsolicited reporting of W_DISABLE	enable unsolicited notification
*CNTI			
\Q			
\S		print AT command settings	
\V		enable extended data call result code	
&C		circuit 109 behaviour	
&D		circuit 108 behaviour	

©Golden Delicious Computers, 2011-2012. License: CC-BY-NC-SA.

Command	Parameters	Function	Comments
&E		control display of data rate	either serial rate or wireless connection speed
&F		reset to factory defined configuration	
&K			
&S		DSR control management	always on
&V		dump configuration parameters	
&W		store V250 and S-registers to non-volatile memory	
%V		request revision information	
+CACM		accumulated call meter	not supported
+CAMM		accumulated call meter maximum	not supported
+CAOC		advice of charge	
+CBC		battery charge	not applicable
+CBST		select bearer service type	
+CCFC		call forwarding number and conditions	
+CCLK		clock	not applicable
+CCUG		closed user group	
+CCWA		call waiting	
+CDIP		called line identification presentation	
+CDV		initiate CDMA/1x voice call	
+CEER		extended error report	
+CFUN		set phone functionality	
+CGACT		PDP context activate or deactivate	
+CGATT		PS attach or detach	
+CGCLASS		GPRS mobile station class	GPRS only
+CGCMOD		PDP context modify	not supported
+CGDATA		enters data state	not supported
+CGDCONT		define PDP context	
+CGDSCONT		define secondary PDP context	not supported
+CGEQMIN		minimum acceptable 3G quality of service profile	does nothing
+CGEQREQ		requested 3G quality of service profile	
+CGEREP		packet domain event reporting	does nothing
+CGMI		request manufacturer idenfitication	
+CGMM		request model identification	
+CGMR		request revision identification	
+CGPADDR		show PDP address	not supported
+CGQMIN		minimum acceptable quality of service profile	does nothing
+CGQREQ		requested quality of service profile	
+CGREG		GPRS network registration status	
+CGSMS		select service for MO SMS messages	
+CGSN		request product serial number identification	IMEI
+CGTFT		traffic flow template	not supported
+CHLD		call related supplementary services	
+CHSN			

©Golden Delicious Computers, 2011-2012. License: CC-BY-NC-SA.

Command	Parameters	Function	Comments
+CHUP		voice call hang-up	
+CHV		hang up CDMA/1x voice call	
+CIMI		request international mobile subscriber identity	IMSI
+CIND		indicator control	call in progress, signal, voice, ringing
+CLAC		list all available AT commands	incomplete list
+CLCC		list current calls	
+CLCK		facility lock	
+CLIP		calling line identification presentation	
+CLIR		calling line identification restriction	
+CLVL		loudspeaker volume control	
+CMEC		mobile equipment control code	not applicable
+CMEE		report mobile equipment error	
+CMER			
+CMGC		send command	not supported
+CMGD		delete message	
+CMGF		message format	
+CMGL		list message	
+CMGR		read message	
+CMGS		send message	
+CMGW		write message to memory	
+CMMS		indicates more messages to send	not supported
+CMOD		call mode	
+CMSS		send message from storage	
+CMUT		mute control	
+CNMA		new message acknowledge to ME/TA	
+CNMI		new message indications to TE	
+CNUM		subscriber number	
+COLP		connected line identification presentation	
+COPN		read operator names	a long list of operator names
+COPS		operator selection	
+CPAS		phone activity status	
+CPBF		find phone book entries	
+CPBR		read phone book entries	
+CPBS		select phonebook memory storage	
+CPBW		write phone book entries	
+CPIN		enter PIN	many commands need PIN
+CPLS		selection of preferred PLMN list	
+CPMS		preferred message storage	
+CPOL		prefered operator list	
+CPUC		price per unit and currency table	not supported
+CPWD		change password	
+CR		service reporting control	
+CRC		cellular result codes	
+CREG		network registration	

©Golden Delicious Computers, 2011-2012. License: CC-BY-NC-SA.

Command	Parameters	Function	Comments
+CRES		restore SMS settings from nonvolatile memory	not supported
+CRLP		radio link protocol	
+CRSM		restriced SIM access	
+CSAS		save SMS settings into nonvolatile memory	not supported
+CSCA		service center address	
+CSCB		set cell broadcast message types	
+CSCS		select TE character set	
+CSDH		show text mode parameters	
+CSIM		generic SIM access	
+CSMP		set text mode paramters	
+CSMS		select message service	
+CSQ		signal quality	
+CSSN		supplementary service notifications	
+CSTA		select type of address	
+CTFR		call deflection	
+CTZR		time zone reporting	
+CTZU		automatic time zone update	
+CUSD		unstructured supplementary services	
+CV120			
+CVHU		voice hang-up control	
+DR		data compression reporting	
+DS		data compression	
+ES		enable synchronous mode	
+ESA		preferred message storage	
+FCLASS		select FAX class	
+GCAP		request complete capabilities list	
+GMI		request manufacturer idenfitication	
+GMM		request manufacturer idenfitication	
+GMR		request revision identification	
+GSN		request revision identification	
+ICCID			
+ICF		DTE-DCE character framing	
+IFC		DTE-DCE local flow control	
+IPR		fixed DTE rate	
+PACSP		get ENS PLNM mode bit	
+VIP		set PCM interface mode	use mode 0
+VTD		DTMF tone duration	0.1 sec steps
+VTS	=[0-9][A-D]#*	DTMF tone generator	supply digit by digit
+WS46		select wireless network	
$BREW			
$CCLK			
$CREG			
$CSQ			
$QCAGC			
$QCBANDPREF			

©Golden Delicious Computers, 2011-2012. License: CC-BY-NC-SA.

Command	Parameters	Function	Comments
$QCBOOTVER			
$QCCLR			
$QCCNMI			
$QCCTM			
$QCDGEN			
$QCDMG			
$QCDMR			
$QCDNSP			
$QCDNSS			
$QCHWREV			
$QCPDPLT			
$QCPDPP		set PAP/CHAP Security Parameters	
$QCPINSTAT			
$QCPWRDN			
$QCSIMSTAT			
$QCSLIP			
$QCSLOT			
$QCSYSMODE			
$QCTER			
$QCVOLT			
A		answer	
D	>: dial from phonebook I/i: override CLIR G/g: conrol CUG ; initiate voice call	dial	; is mandatory for a voice call
E		command echo	echo AT commands
H		hook control	H0 to hang up
I		request identification information	print modem identification
L		monitor speaker loudness	does nothing
M		monitor speaker mode	does nothing
O		return to online data state	
P		select pulse dialing	does nothing
Q		result code suppression	suppress “OK“
S0		automatic answer	
S10		automatic connect delay	does nothing
S103			
S104			
S11			
S2			
S3		command line termination parameter	
S30		data inactivity timer for disconnect	does nothing
S4		response formatting character	
S5		command line editing character	
S6		pause before blind dialing	does nothing
S7		connection completion timeout	does nothing

©Golden Delicious Computers, 2011-2012. License: CC-BY-NC-SA.

Command	Parameters	Function	Comments
S8		comma dialer modifier time	does nothing
S9			
T		select tone dialing	does nothing
V		DCE response format	
X		result code selection and call progress monitoring control	
Z		reset to detault configuration	

10.5. Audio / Voice

There is a ALSA driver for the TPS65950 (twl4030). It allows to control all mixer settings described in the TPS65950 Technical Reference Manual (SWCU050 (Figures 14-6 and 14-7 - which option is available can also be changed through amixer).

Telephony Voice is presented on McBSP4. PCM clock and sync is generated by the GTM601 module. 2MHz clock, 8kHz sync (mode 0 of AT+VIP=0).

Issue the AT_OPCMENABLE=1 command to the module and choose the profile by AT_OPCMPROF.

Dial a number through ATD. Append a semicolon (;) to initiate a voice call.

10.6. I2C1 devices

I2C1 is connected to the TPS65950. It provides the four functional blocks at addresses 0x48, 0x49, 0x4a, 0x4b. For details refer to the TPS65950 documentation.

10.7. I2C2 devices

This bus connects all sensors and controllers. Not all chips are necessarily installed.

Address	Device Type	Function
0x1C	LIS302	Accelerometer (BOTTOM)
0x77	BMP085	Barometer, Thermometer
0x1E	HMC5883L	Digital Compass
0x41	BMA180	Accelerometer (BOTTOM)
0x48	TSC2007	Touch Screen, Chip Temperature, Ambient Light (AUX channel)
0x11	Si4705/ Si4721	FM Receiver with RDS
0x45	TCA6507	LED driver
0x33	TPS61050	Torch/Flash LED driver
0x30	OV9655	Camera

©Golden Delicious Computers, 2011-2012. License: CC-BY-NC-SA.

Address	Device Type	Function
0x50	MT24LR64	RFID-EEPROM
0x34	TCA8418	Keypad controller

10.8. GPIO assignment

This table lists the GPIOs that can and or should reasonably be switched to GPIO mode (4). Please be aware that you do switch input/output direction through PINMUX. And additionaly have to choose the direction of a GPIO between input and bidirectional.

GPIO Number	Mode 0 Pin Name	Function (if used as GPIO)
54		connected to temperature sensor of PoP memory. Goes to 1 if chip temperatore > 85 °C; should generate an interrupt and reduce power
57	GPT11_PWM	switch on/off LCD backlight; should be used in PWM mode
19	McBSP5_FSX	Chip-Select for LCD serial interface
12	McBSP5_CLKX	LCD serial clock
20	McBSP5_DX	LCD serial data output (protected)
18	McBSP5_DR	LCD serial data input
23		Enable TV-Out for MIC/AV on headset jack
55		Enable Headset Jack left&right output
171	McSPI1_CLK	sense board version (R307)
172	McSPI1_SIMO	sense board version (R306)
173	McSPI1_SOMI	sense board version (R305)
174	McSPI1_CS	Reset for USB3322 ULPI-PHY to interface with WWAN module
145	UART2_RTS	GPS-ON/OFF
144	UART2_CTS	internal/external Antenna sense
7	SYS_BOOT5	read state of AUX button (1=pressed)
170	HDQ	read/write HDQ protocol
114		LIS302/BMA180 INT1
115		LSM303 INT1 (Accelerometer)
162		LSM303 DRDY (Compass)

©Golden Delicious Computers, 2011-2012. License: CC-BY-NC-SA.

GPIO Number	Mode 0 Pin Name	Function (if used as GPIO)
56		ITG3200 INT
113		BMP085 INT
160		TSC2007 PENIRQ
156		Si47xx INT
13		RS232/IrDA selection
21		RS232 EXT
176		Keyboard INT
10		3G-WAKE (impulse on AT_ORESET, incoming call or incoming SMS)
186		start/stop UMTS module

10.9. Board version encoding

GPIO171, 172, and 173 allow to distinguish between board versions by populating 0 Ohm resitors or leaving them out. The GPIO pins are switched to pull-up mode so leaving out a resistor reads the GPIO as a high level.

R305	R306	R307	GPIO173	GPIO172	GPIO171	Version
-	-	-	1	1	1	GTA04A2
X	-	-	0	1	1	GTA04A3
-	X	-	1	0	1	GTA04A4
-	-	X	1	1	0	GTA04A5
X	X	-	0	0	1	GTA04A6
X	-	X	0	1	0	GTA04A7
-	X	X	1	0	0	GTA04A8
X	X	X	0	0	0	GTA04A9

10.10. Significant Hardware changes

This section describes the hardware changes that are significant to know when writing low-level software.

©Golden Delicious Computers, 2011-2012. License: CC-BY-NC-SA.

10.10.1.GTA04A1 to GTA04A2

GTA04A1 („Openmoko Beagle Hybrid“) was an adapter board to connect an Openmoko touchscreen and a GPS receiver to a Beagleboard. Main differences are in GPIO and signal assigments. And the lack of many functions of later versions.

10.10.2.GTA04A2 to GTA04A3

Major reassignment of some GPIOs and other interface. Since only a single GTA04A2 board was ever built, these changes are not documented here in any detail.

10.10.3.GTA04A3 to GTA04A4

The LIS302 and LSM303 are not installed.

All sensors are installed.

The test points (expansion connections) are rearranged and extended.

The UMTS module does no longer power on automatically. It needs an on/off impulse (>200 mS) on GPIO186.

The UMTS module can generate a 3G-Wakeup interrupt on GPIO10.

The test points of the GTM601W have been removed.

The UMTS voice PCM is additionally connected to the TPS65950 PCM voice channel. This requires to properly tri-state the McBSP4/TPS-PCM interface!

McSPI3 is no longer connected to the GTM601W. McSPI3 is still available on the B2B connector and in addition on easily accessible test points.

The KEYIRQ has been moved from GPIO10 to GPIO176.

WLAN and Bluetooth power is no longer fed to separate test points (since this voltage is easily accessed on some components).

There is a separate LDO that is controlled by VAUX4.

The WLAN/BT module has been replaced by Firmware variant W2CBW003C-001/003. This has the UART interface for Bluetooth pre-initialized for 3 Mbit/s instead of 115200 kbit/s. This needs to install a special OMAP UART driver to program the prescalers as needed. Since Linux 2.6.34 this appears to be the default (/dev/ttyO0 instead of /dev/ttyS0).

©Golden Delicious Computers, 2011-2012. License: CC-BY-NC-SA.

11. Legal Info

The responsible manufacturer according to EU laws (e.g. WEEE, CE, product liability etc.) is Golden Delicious Computers GmbH&Co. KG, Oberhaching, Germany.

11.1. Safety Instructions

1. Before entering an area where Mobile Phones are prohibited (e.g. Airplane, Hospital), remove the battery! The hardware+software can't guarantee that the mobile phone transmitter is switched completely off.
2. Keep away from liquids.
3. Do not operate above 35 degrees surrounding temperature (inside temperature may be 20-30 degrees above outside temperature).
4. Don't heat up the battery above 80 degrees.
5. Don't expose to direct sunlight even if switched off.
6. Only use the provided charging unit or use the USB socket of a computer.
7. Use only safe and correctly installed power outlets.
8. This device emits GSM/UMTS as well as other radio waves. A medical risk has neither been proven nor disproven so far. Certification/Approval requires to keep the antennas at least 20cm away from persons.
9. The Emergency call (112 / 911) capability may be limited by your installed software. So, please carry a working mobile phone with you for placing emergency calls.
10. This device can create audible sounds through the built-in speaker or a connected headset. If the acoustic waves are too powerful and/or for a long duration, this may cause hearing damage.
11. The device can be used as a recorder and player device. This requires to comply to intellectual property laws.
12. Let repairs and maintanance be done only by qualified service persons.

11.2. CE - Conformity

The Openphoenux GTA04 has been measured by Schwille Elektronik GmbH that it conforms to the European standards:

- DIN EN 55022; VDE 0878-22:2008-07 Einrichtungen der Informationstechnik - Funkstöreigenschaften - Grenzwerte und Messverfahren (IEC/CISPR 22:2005, modifiziert + A1:2005); Deutsche Fassung EN 55022:2006 + A1:2007

The UMTS module GTM601W has been assessed as model MO6012 by SGS UK Ltd. They are a BIS appointed notified body (0890) The serial number is GSM139580.

The WLAN/Bluetooth transmitters fall under the unlicenced operation rules.

The device falls in Equipment Class II.

You can find a copy of the test reports here:

http://download.goldelico.com/gta04/Certificates/

11.3. FCC

The device has no individual FCC approval but complies with Part 15 of the FCC rules.

The device contains:

©Golden Delicious Computers, 2011-2012. License: CC-BY-NC-SA.

FCC-ID: NCMOMO6012

FCC-ID: U9R-W2CBW003

IC: 2734A-MO6012

IC: 7089A-W2CBW003

11.4. Allowed WLAN frequency range

Europe/ETSI:	Channel 01 - 13
North America:	Channel 01 - 11

In some areas of France, there are additional limitations:

10mW for all channels, 100mW only for channel 10-13

Please refer to local information at www.art-telecom.fr

11.5. ROHS

This device is in compliance with EC Directive 2002/95/EC.

11.6. Recycling / WEEE (ID: DE80183434)

Electronical devices are not allowed to be put into household waste. Please bring it to an appropriate recycling collection system.

Never put the battery into fire.

This device contains a LiIon battery. It is not allowed to be put into household waste. Please bring the device and the battery to an appropriate recycling collection system or return them to us.

11.7. US-EAR

This devices contains components classified as US technology in groups 3A, 5A, 7A. The device itself is classified as 5A992 and therefore falls under the „mass market encryption rules“. This means that it can not be (re-)exported to embargoed countries. Refer to the latest EAR tables, definitions and laws.

11.8. GPL

The product may contain software that is licenced according to the (L)GPL. Since we consider printing the full licence text here as an ecological waste of paper, please refer to it online: http://www.gnu.org/licenses/gpl.html

11.9. Trademarks

Linux is a registered trademark of Linus Torvalds. Openmoko is a registered trademark of FIC/Openmoko, Inc., Golden Delicious is a registered trademark of Golden Delicious Computers GmbH&Co. KG.

All other products, brand names, company names and trademarks are property and trademark of the particular owners and are used here for referential purposes only.

11.10. Copyright

This document is authored by employees of Golden Delicious Computers GmbH&Co. KG. Copying without appropriate permission (see license) is prohibited.

11.11. Limitation of Liability

The liability is limited as far as possible to the sales price of the device. Golden Delicious Computers GmbH&Co. KG is never liable for loss of data or recordings and for consequential losses, such as loss of use, production and loss of profits.

©Golden Delicious Computers, 2011-2012. License: CC-BY-NC-SA.

12. Warranty

This device has 24 months warranty according to the rules of the EU.

Up to 2 bad pixels are not covered by warranty.

In case of technical problems, please contact your retail shop.

Golden Delicious Computers GmbH&Co. KG
Buchenstr. 3
82041 Oberhaching
Germany
Amtsgericht München, HRA 89571
http://www.goldelico.com
service@goldelico.com
Tel +49 (89) 5429 0367
Fax +49 (89) 5429 0377

©Golden Delicious Computers, 2011-2012. License: CC-BY-NC-SA.

13. Change History

new Version	Changes
GTA04A4-3	Change history added warning for handling display connector warning to never switch off VAUX2 address of TAC8418 fixed to 0x34 ttyS* replaced by ttyO* Bluetooth UART now preconfigured for 3 MBit/s
GTA04A4-4	Fixed typo for P1902 [McBSP5-CLKX is GPIO12 and not GPIO17] fixed description of swapped pin 7&8 of RS232 DB9f Multiboot description added

©Golden Delicious Computers, 2011-2012. License: CC-BY-NC-SA.

14. Schematics

The following pages show the schematics and the PCB placement as current when this manual was printed. They are subject to change. And, not all components are necessarily available or installed in your device.

Please note the Creative Commons Licence for the Schematics. I.e. if you derive work on it you are required to share it under the same licence and attribute to the original authors.

If you need a different licence, please contact us for written permission.

14.1. Page 1 Block Diagram

14.2. Page 2 Display, Touch Controller, Backlight

14.3. Page 3 CPU, SD-Card, PCB-Version, Boot options

14.4. Page 4 CPU-TPS, Vibra, LEDs, Misc

14.5. Page 5 Clock, Charging, Battery

14.6. Page 6 TPS/OMAP Power

14.7. Page 7 Audio Codec, Video

14.8. Page 8 USB-OTG

14.9. Page 9 internal WWAN-USB

14.10. Page 10 WWAN/UMTS Modem + SIM

14.11. Page 11 WLAN/BT

14.12. Page 12 GPS

14.13. Page 13 Sensors (Accelerometer, Barometer, Compass, ...)

14.14. Page 14 FM-TRX, RFID-EEPROM

14.15. Page 15 RS232, IrDA

14.16. Page 16 (Keypad Controller option)

©Golden Delicious Computers, 2011-2012. License: CC-BY-NC-SA.

14.17. Page 17 Camera

14.18. Page 18 (VGA, DVI option)

14.19. Page 19 B2B Connectors

14.20. Component placement Top

14.21. Component placement Bottom

©Golden Delicious Computers, 2011-2012. License: CC-BY-NC-SA.

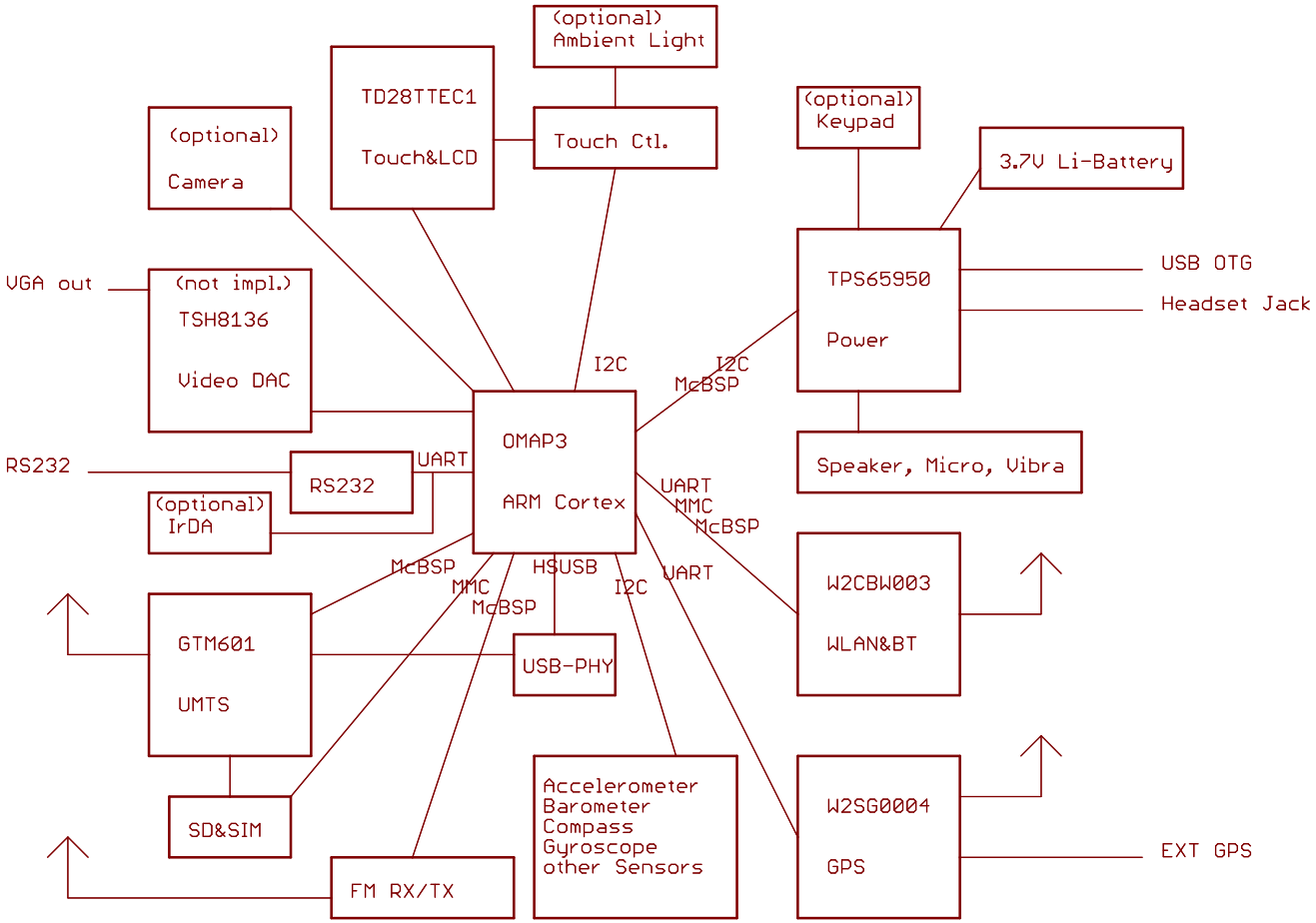

Table of Contents

1. Block Diagram
2. CPU & Display & TSC
3. CPU, SD Card, PCB Vers
4. TPS I2C, Vibra, Misc
5. Clock and Charger
6. OMAP Power
7. Audio & Video
8. USB-OTG, MCPC
9. internal USB
10. UMTS Modem + SIM
11. WLAN & Bluetooh
12. GPS
13. Sensors
14. FM Receiver (+Transm.)
15. RA232&IrDA
16. Keypad
17. Camera
18. VGA & DVI Out
19. Expansion Connector

Block Diagram

TITLE: GTA04A4

Document Number: REV:

Date: 31.01.12 10:13 Sheet: 1/20

(c) 2011 Golden Delicious Computers GmbH&Co. KG. Licensed under CC-BY-NC-SA.

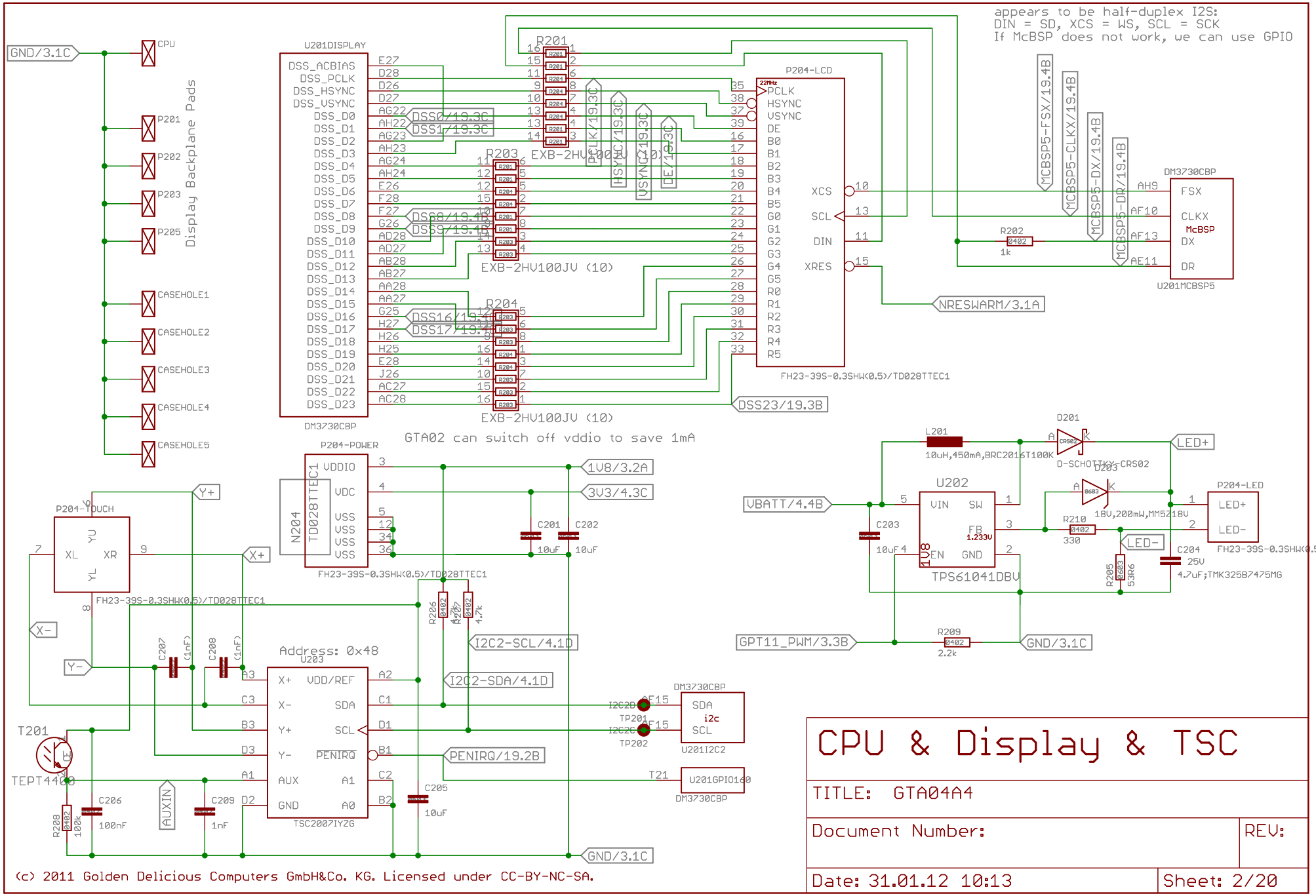

CPU & Display & TSC

TITLE: GTA04A4

Document Number:

REV:

Date: 31.01.12 10:13

Sheet: 2/20

(c) 2011 Golden Delicious Computers GmbH&Co. KG. Licensed under CC-BY-NC-SA.

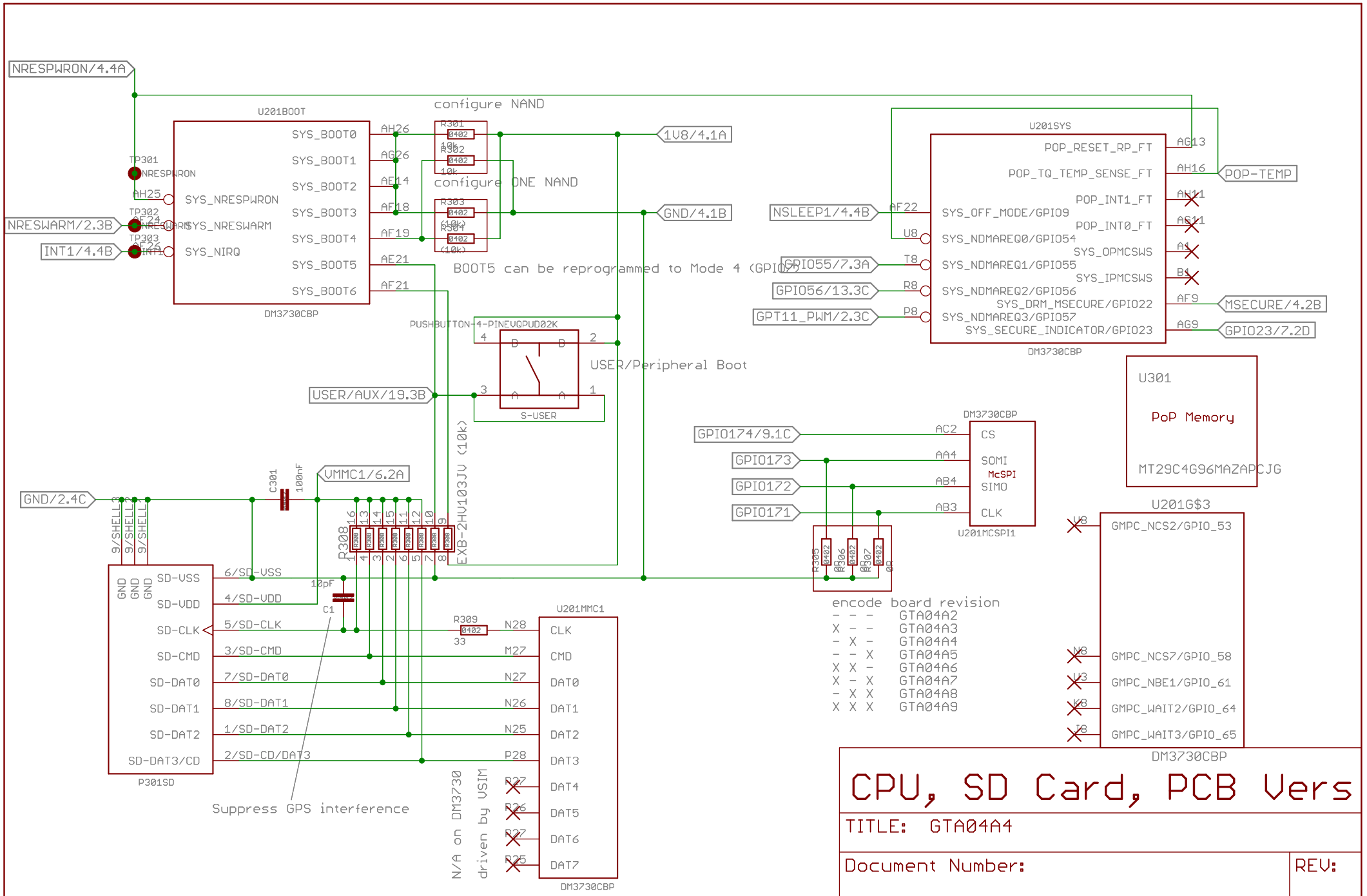

(c) 2011 Golden Delicious Computers GmbH&Co. KG. Licensed under CC-BY-NC-SA.

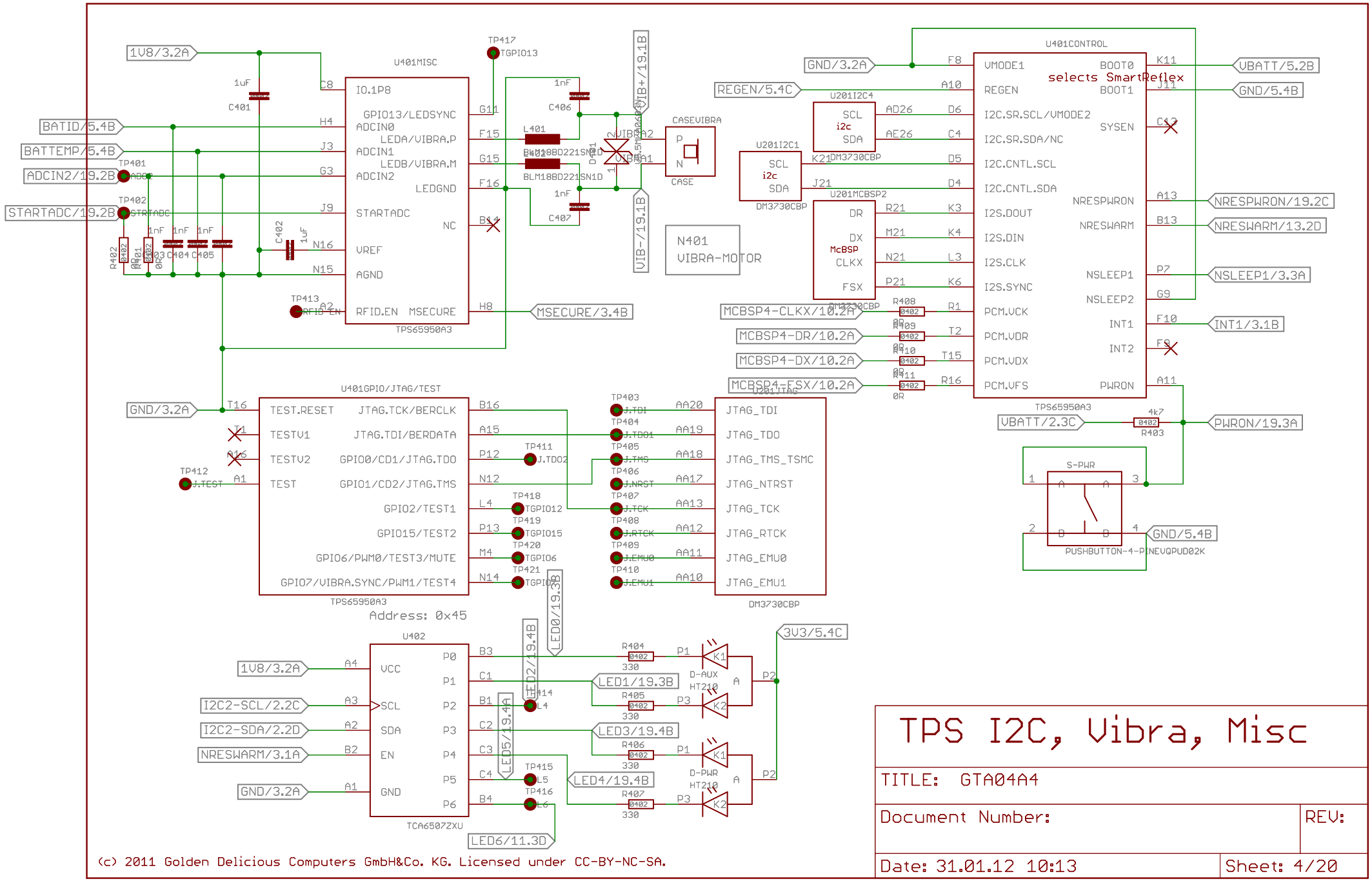

TPS I2C, Vibra, Misc

TITLE: GTA04A4

Document Number:

REV:

Date: 31.01.12 10:13

Sheet: 4/20

(c) 2011 Golden Delicious Computers GmbH&Co. KG. Licensed under CC-BY-NC-SA.

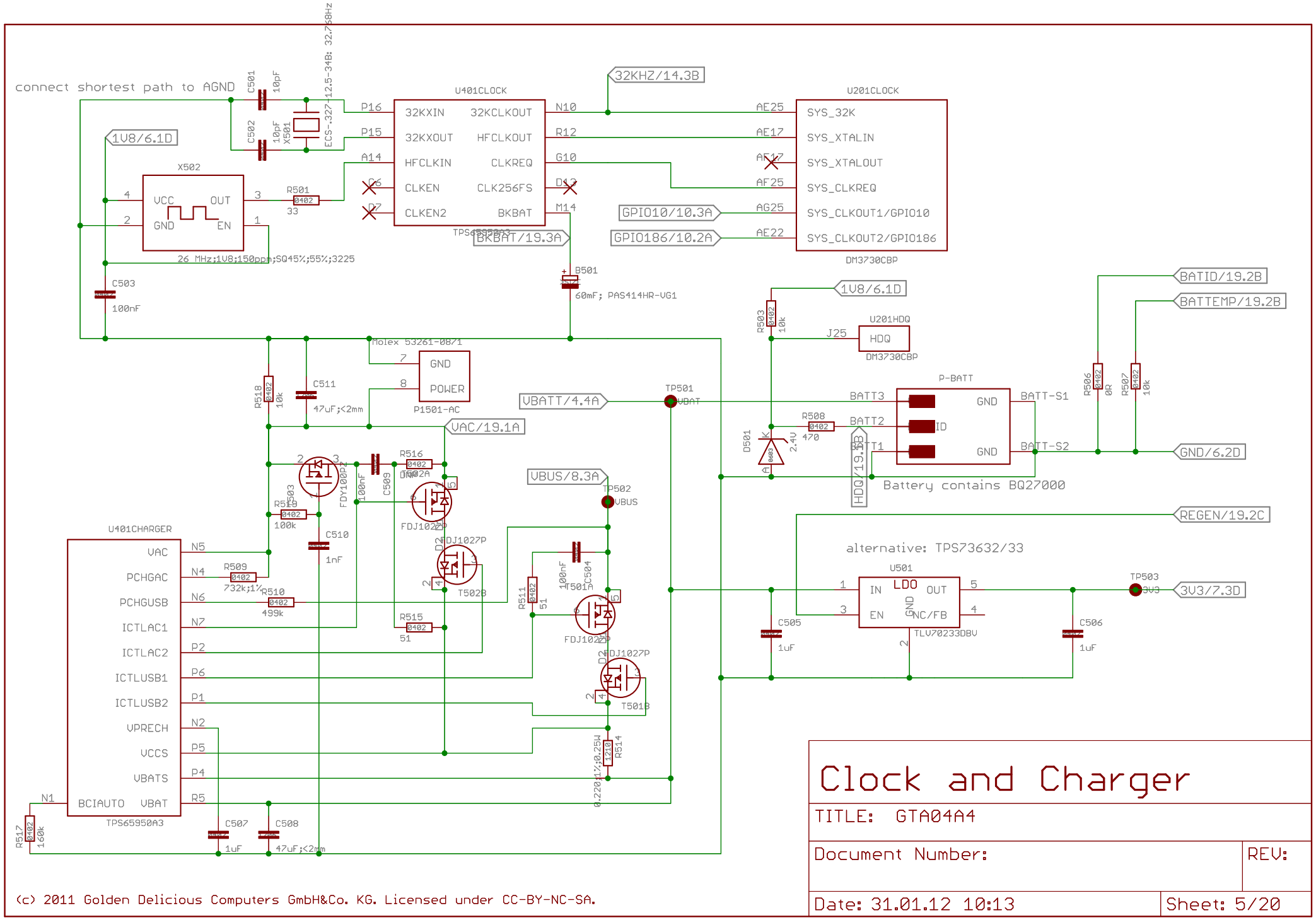

Clock and Charger

TITLE: GTA04A4

Document Number:

REV:

Date: 31.01.12 10:13

Sheet: 5/20

(c) 2011 Golden Delicious Computers GmbH&Co. KG. Licensed under CC-BY-NC-SA.

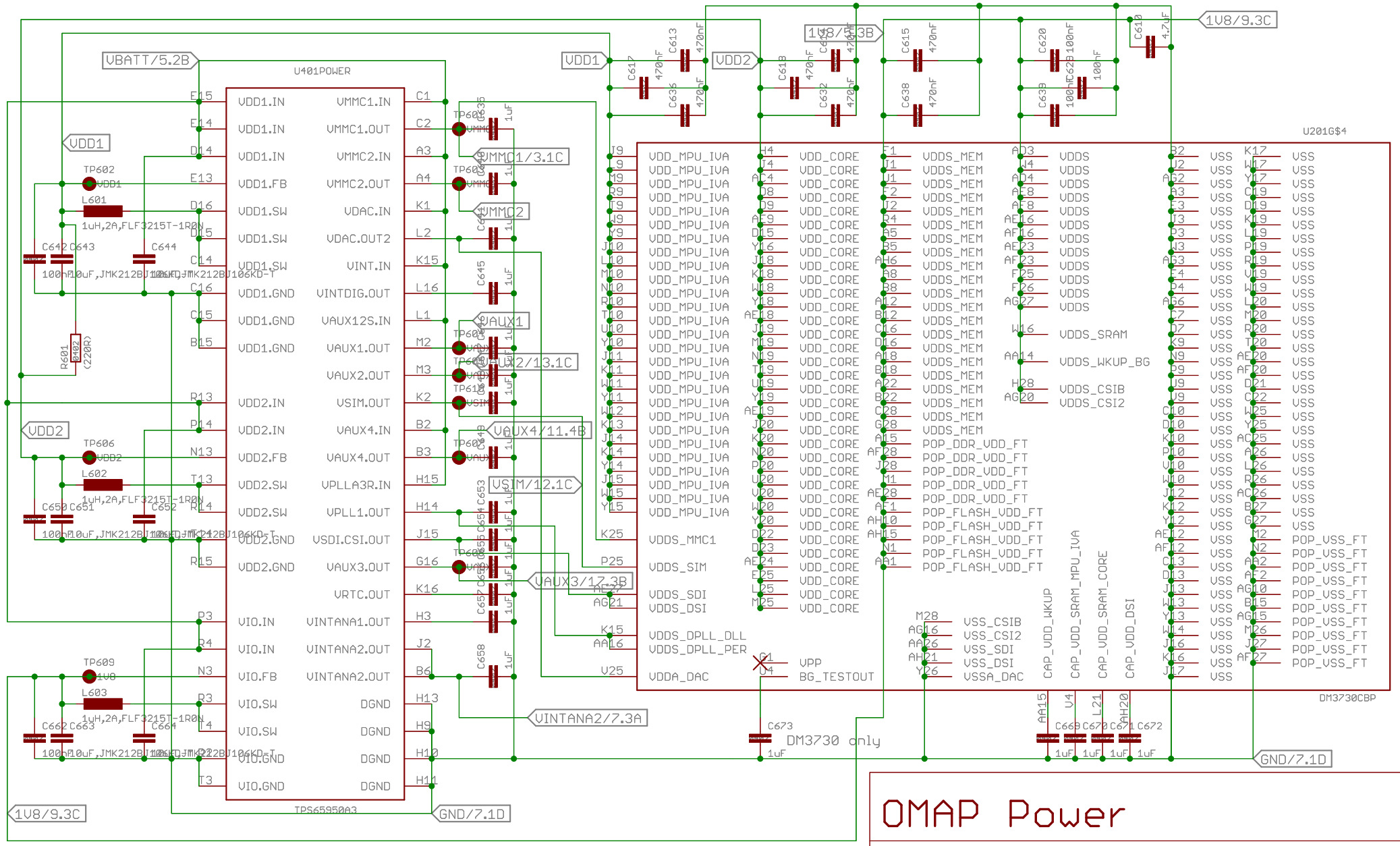

OMAP Power

TITLE: GTA04A4

Document Number:

REV:

Date: 31.01.12 10:13

Sheet: 6/20

(c) 2011 Golden Delicious Computers GmbH&Co. KG. Licensed under CC-BY-NC-SA.

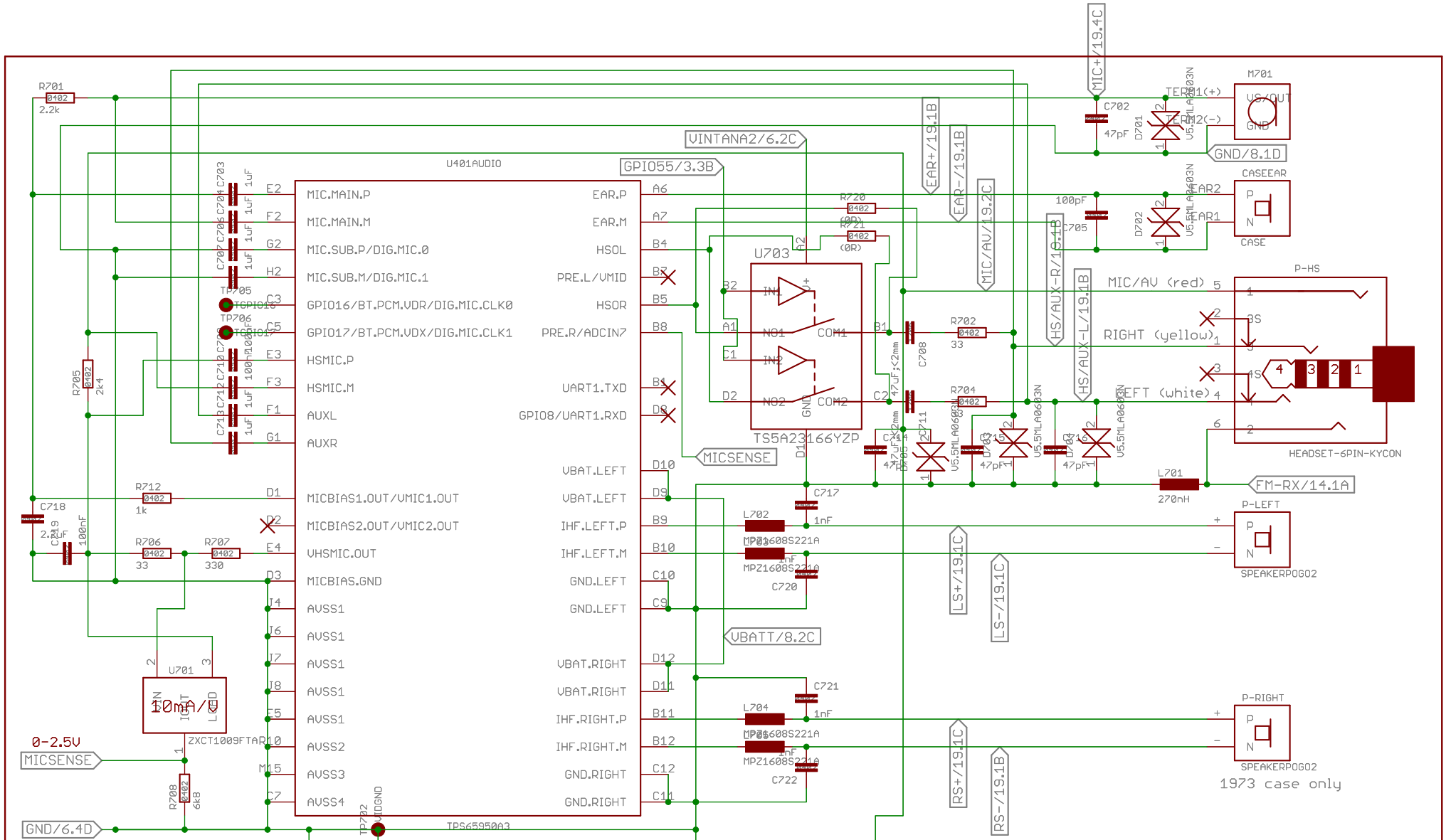

Audio & Video

TITLE: GTA04A4

Document Number:

REV:

Date: 31.01.12 10:13

Sheet: 7/20

(c) 2011 Golden Delicious Computers GmbH&Co. KG. Licensed under CC-BY-NC-SA.

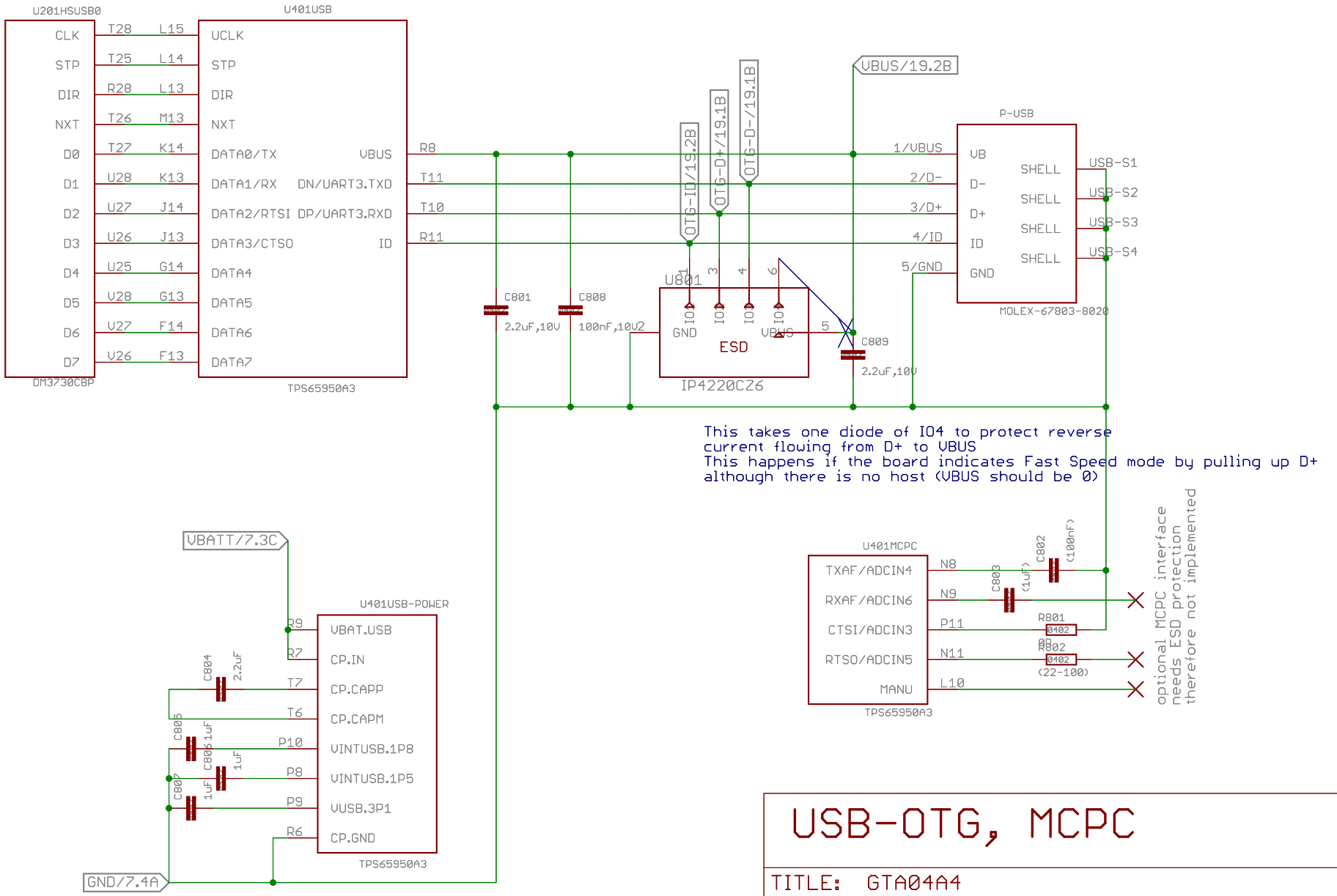

USB-OTG, MCPC

TITLE: GTA04A4

Document Number:

REV:

Date: 31.01.12 10:13

Sheet: 8/20

(c) 2011 Golden Delicious Computers GmbH&Co. KG. Licensed under CC-BY-NC-SA.

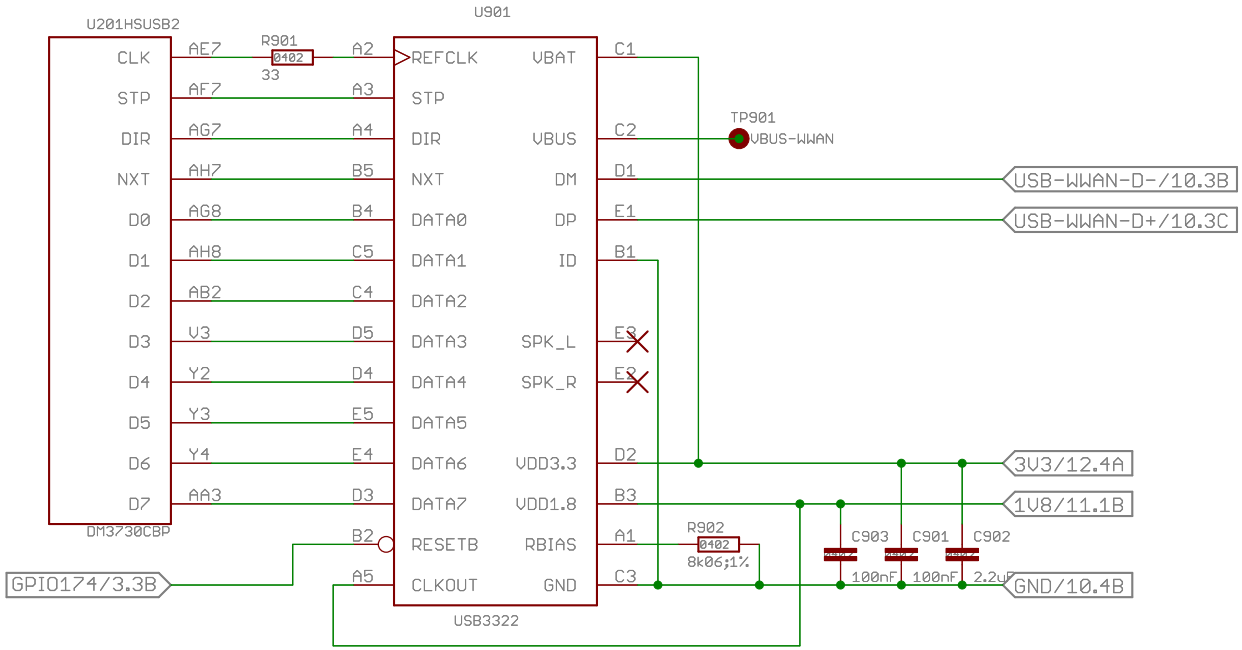

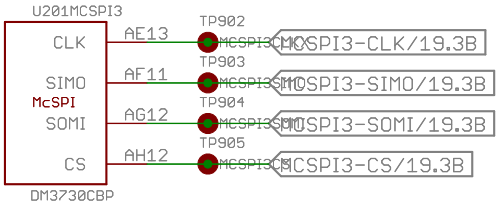

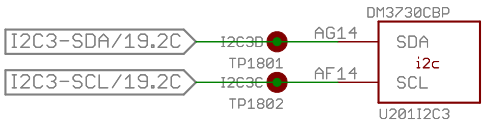

internal USB&expansion

TITLE: GTA04A4

Document Number:

REV:

Date: 31.01.12 10:13

Sheet: 9/20

(c) 2011 Golden Delicious Computers GmbH&Co. KG. Licensed under CC-BY-NC-SA.

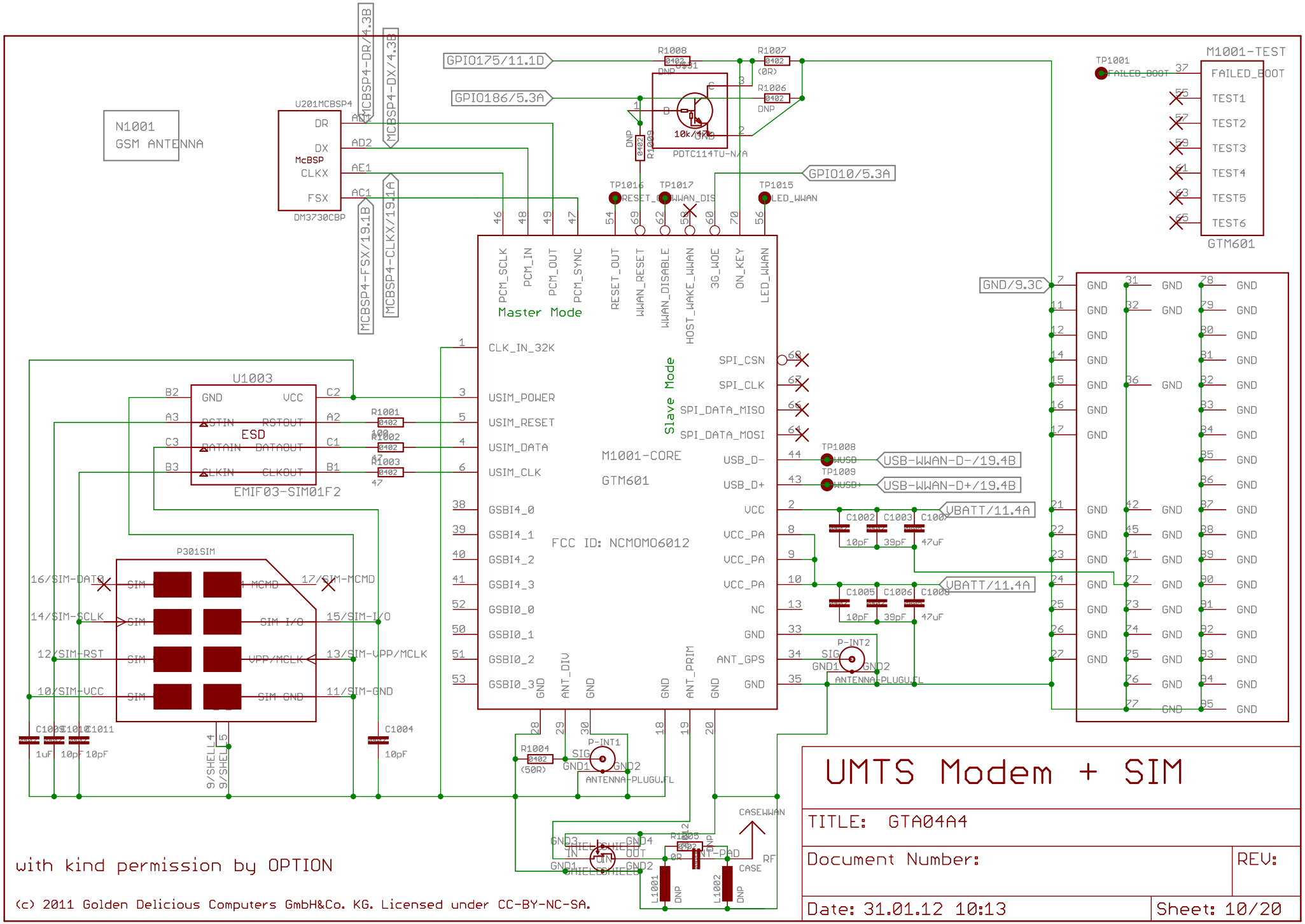
N1001
GSM ANTENNA
U201MCBSP4
DR
DX
McBSP
CLKX
FSX
DM3730CBP
MCBSP4-DR/4.3B
MCBSP4-DX/4.3B
MCBSP4-FSX/19.1B
MCBSP4-CLKX/19.1A
GPIO175/11.1D
GPIO186/5.3A
GPIO10/5.3A
R1008
R1007
R1006
R1009
PDTC114TU-N/A
TP1016
TP1017
TP1015
TP1001
FAILED_BOOT
M1001-TEST
TEST1
TEST2
TEST3
TEST4
TEST5
TEST6
GTM601
GND/9.3C
PCM_SCLK
PCM_IN
PCM_OUT
PCM_SYNC
RESET_OUT
WWAN_RESET
WWAN_DISABLE
HOST_WAKE_WWAN
3G_WOE
ON_KEY
LED_WWAN
Master Mode
Slave Mode
CLK_IN_32K
USIM_POWER
USIM_RESET
USIM_DATA
USIM_CLK
GSBI4_0
GSBI4_1
GSBI4_2
GSBI4_3
GSBI0_0
GSBI0_1
GSBI0_2
GSBI0_3
SPI_CSN
SPI_CLK
SPI_DATA_MISO
SPI_DATA_MOSI
USB_D-
USB_D+
VCC
VCC_PA
NC
GND
ANT_GPS
ANT_DIV
ANT_PRIM
M1001-CORE
GTM601
FCC ID: NCMOMO6012
TP1008
TP1009
USB-WWAN-D-/19.4B
USB-WWAN-D+/19.4B
VBATT/11.4A
C1002
C1003
C1004
C1005
C1006
C1008
10pF
39pF
47uF
U1003
ESD
EMIF03-SIM01F2
R1001
R1002
R1003
P301SIM
16/SIM-DATA
17/SIM-MCMD
14/SIM-SCLK
15/SIM-I/O
12/SIM-RST
13/SIM-VPP/MCLK
10/SIM-VCC
11/SIM-GND
C1009
C1010
C1011
1uF
10pF
9/SHELL4
9/SHELL5
R1004
(50R)
P-INT1
P-INT2
ANTENNA-PLUGU.FL
CASEWWAN
ANT-PAD
RF
CASE
L1001
L1002
DNP
with kind permission by OPTION
(c) 2011 Golden Delicious Computers GmbH&Co. KG. Licensed under CC-BY-NC-SA.
UMTS Modem + SIM
TITLE: GTA04A4
Document Number:
REV:
Date: 31.01.12 10:13
Sheet: 10/20

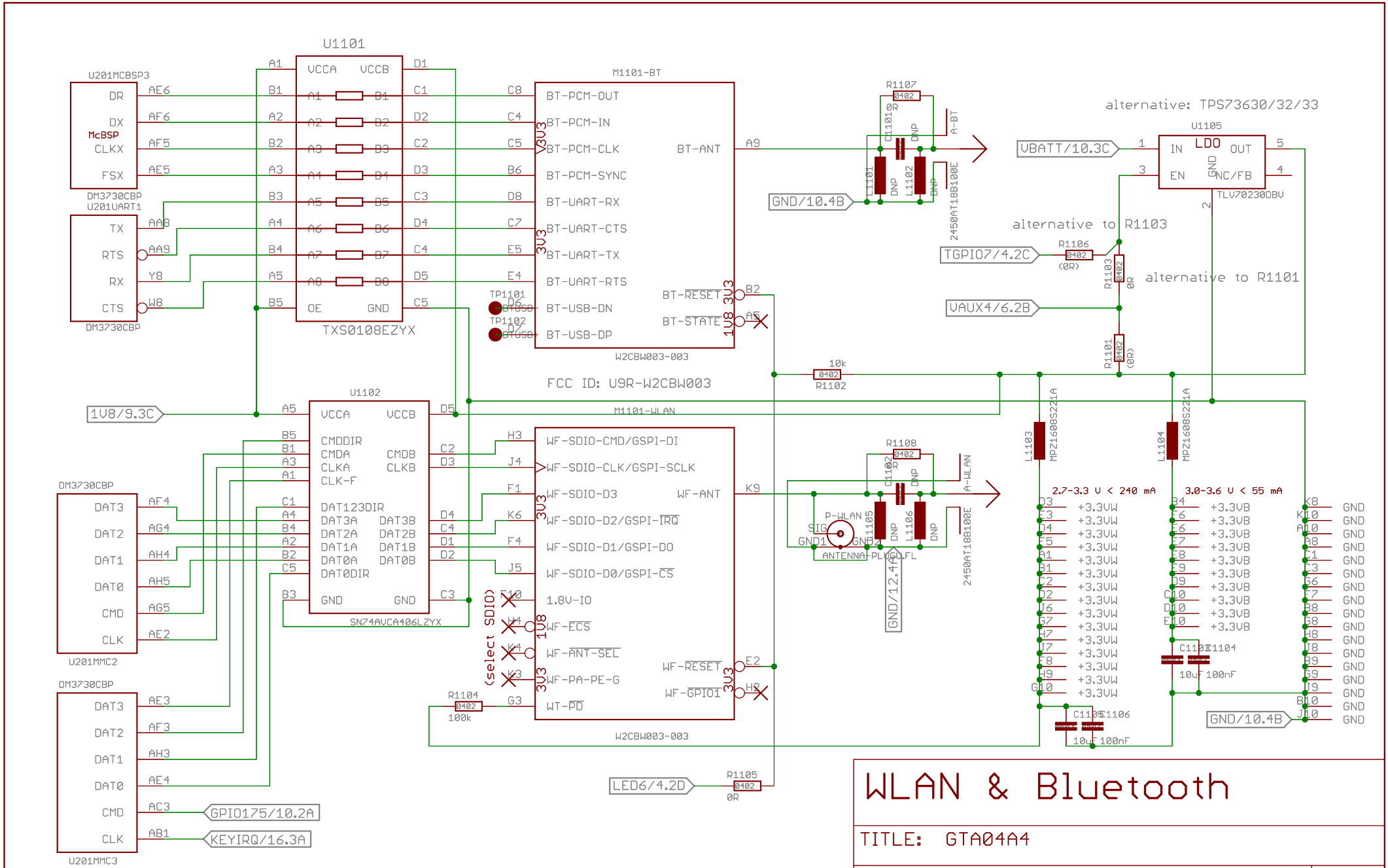

WLAN & Bluetooth

TITLE: GTA04A4

Document Number:

REV:

Date: 31.01.12 10:13

Sheet: 11/20

with kind permission by Wi2Wi

(c) 2011 Golden Delicious Computers GmbH&Co. KG. Licensed under CC-BY-NC-SA.

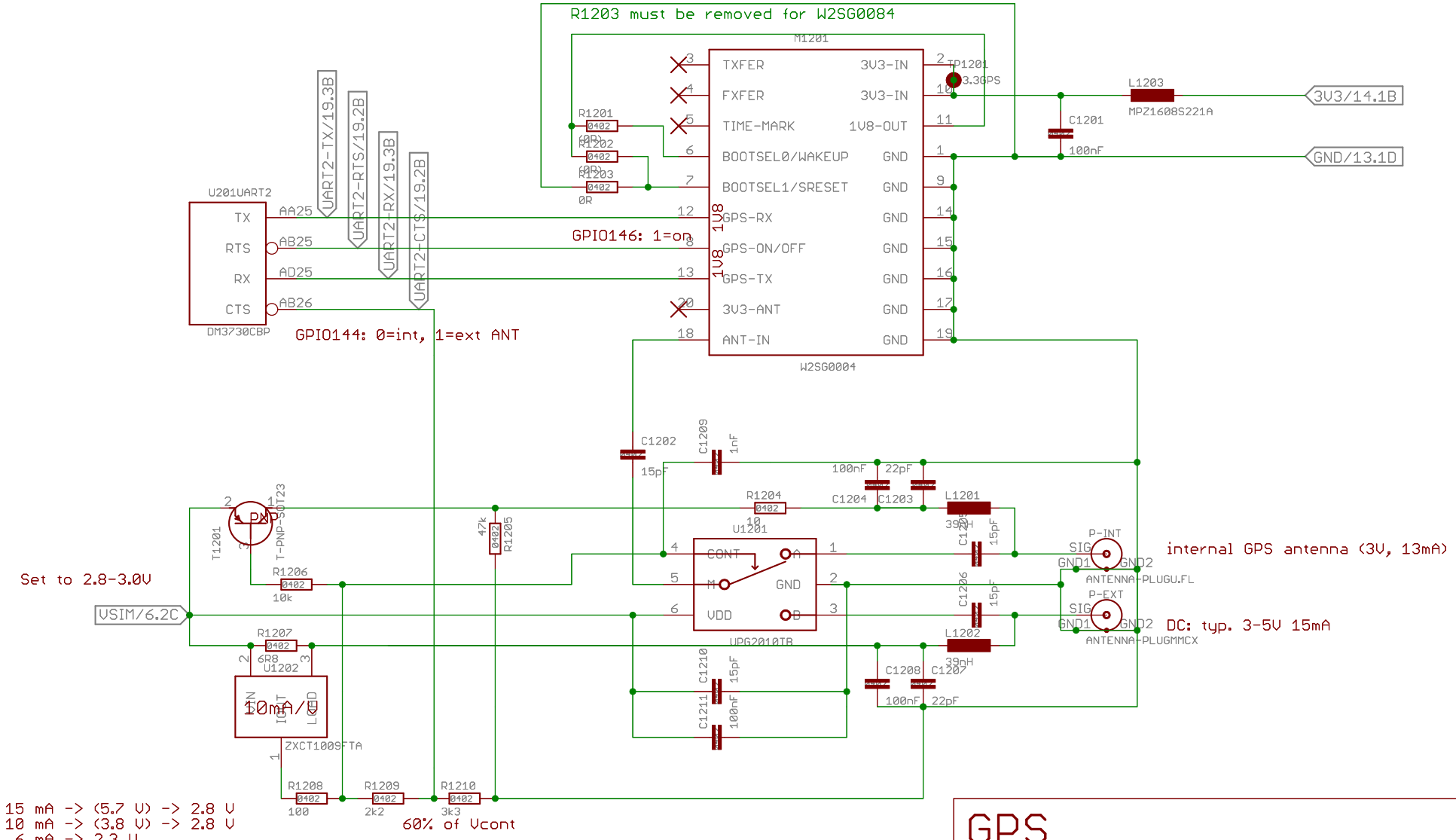

GPS

TITLE: GTA04A4

Document Number:

REV:

Date: 31.01.12 10:13

Sheet: 12/20

(c) 2011 Golden Delicious Computers GmbH&Co. KG. Licensed under CC-BY-NC-SA.

placement optional and sometimes alternatively

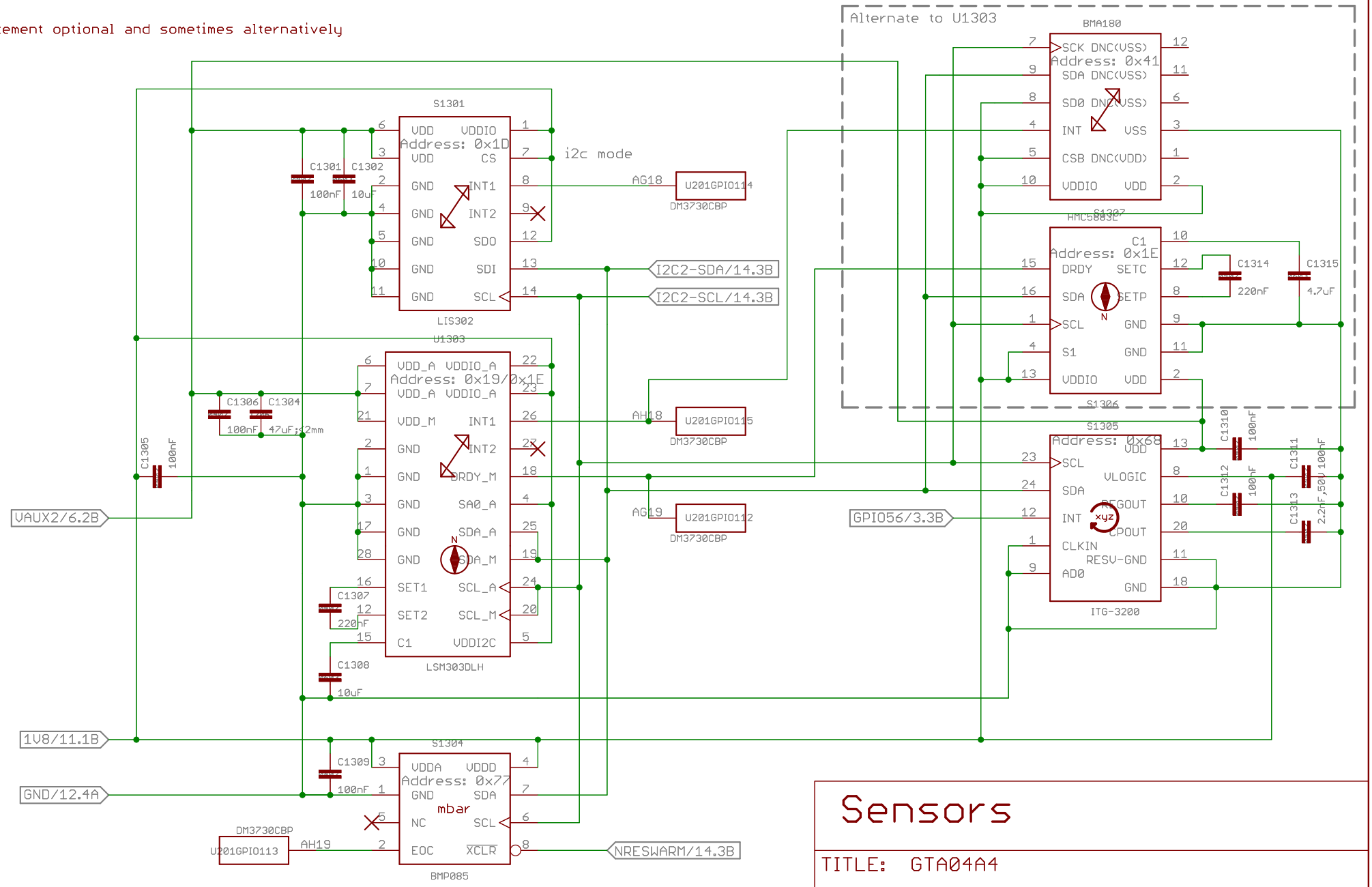

Sensors

TITLE: GTA04A4

Document Number:

REV:

Date: 31.01.12 10:13

Sheet: 13/20

(c) 2011 Golden Delicious Computers GmbH&Co. KG. Licensed under CC-BY-NC-SA.

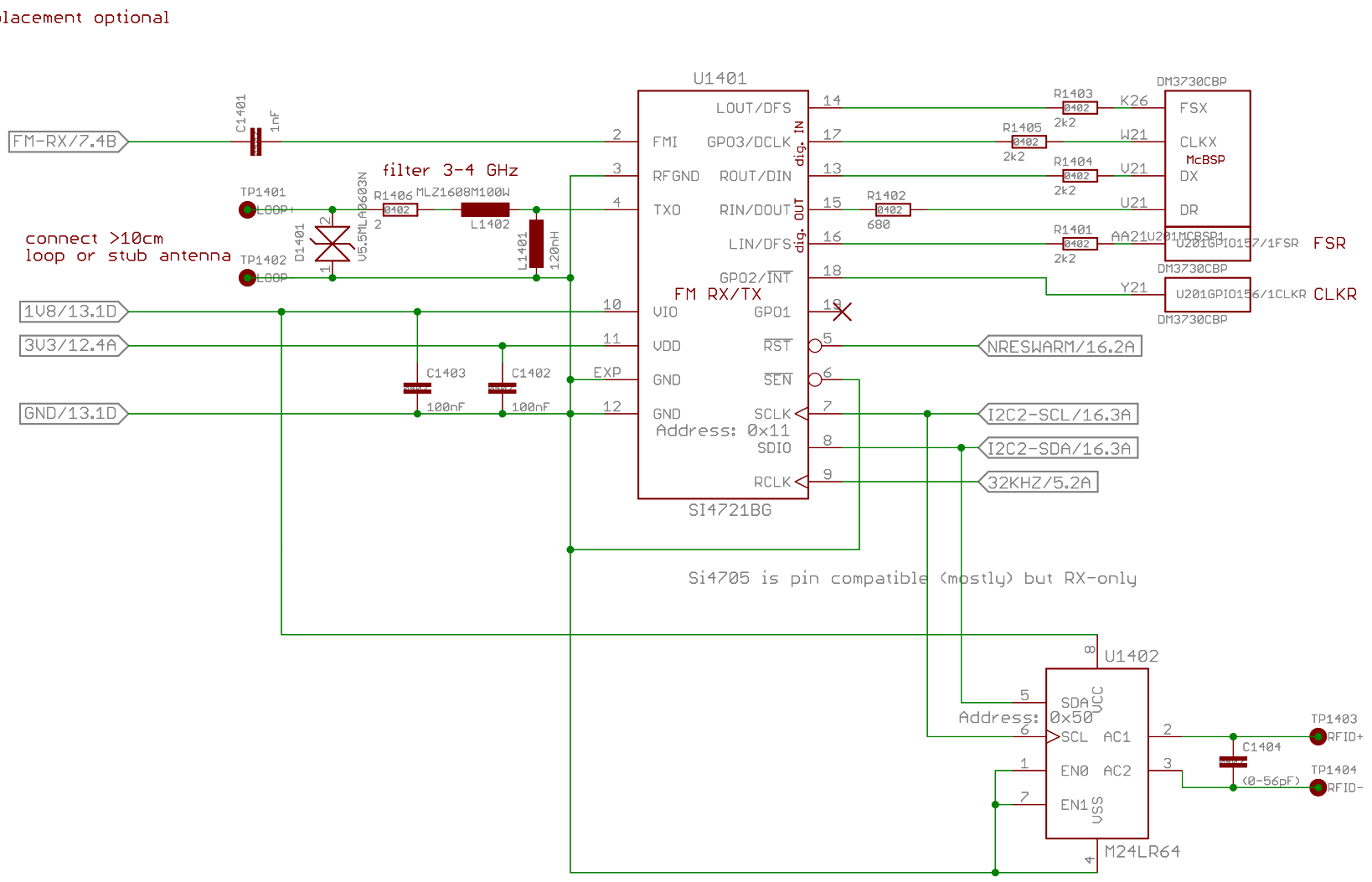

FM TRX & RFID-EEPROM

TITLE: GTA04A4

Document Number:

REV:

Date: 31.01.12 10:13

Sheet: 14/20

(c) 2011 Golden Delicious Computers GmbH&Co. KG. Licensed under CC-BY-NC-SA.

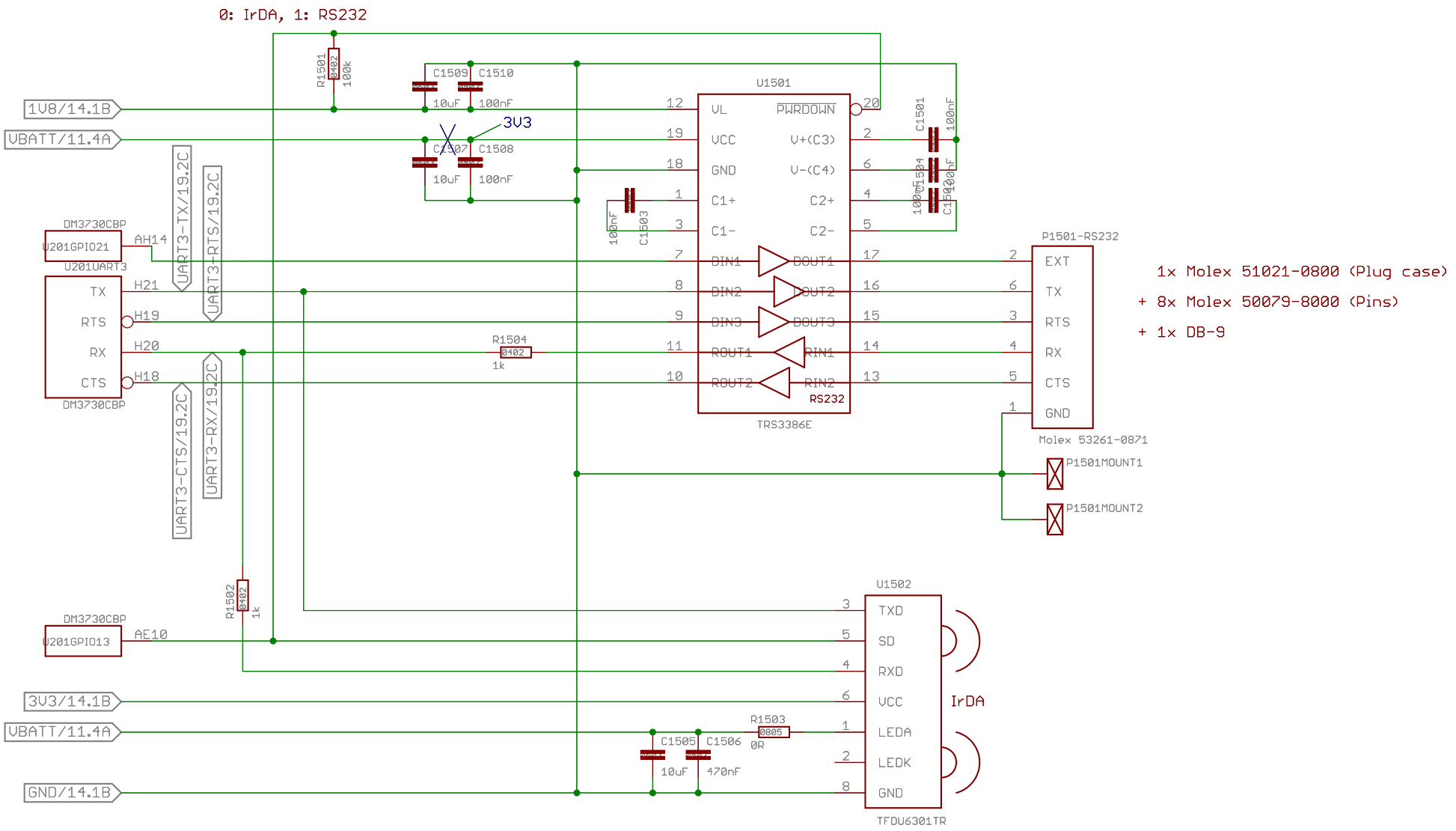

RS232&IrDA

TITLE: GTA04A4

Document Number:

REV:

Date: 31.01.12 10:13

Sheet: 15/20

(c) 2011 Golden Delicious Computers GmbH&Co. KG. Licensed under CC-BY-NC-SA.

currently not implemented

Address: 0x64 All signals on TP on board edge

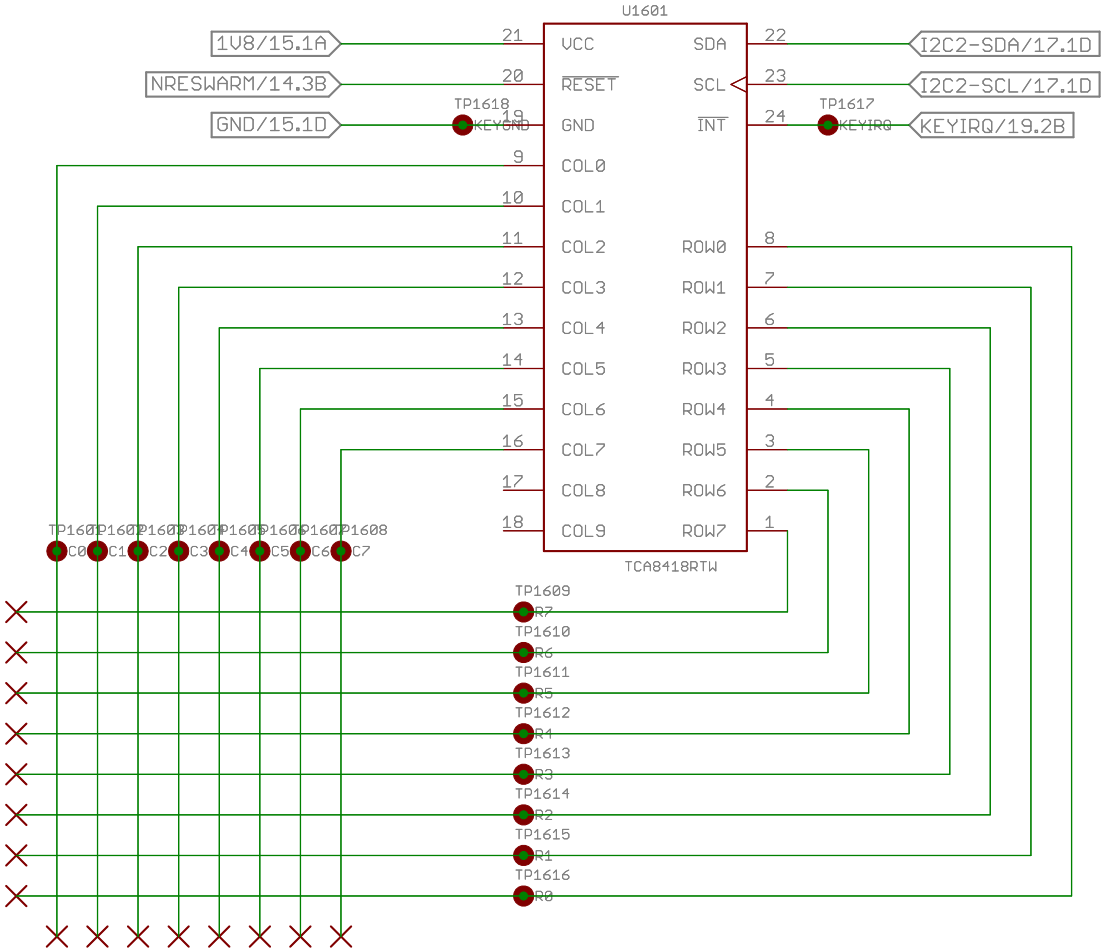

durch 6pol-Stecker ersetzen?

Keypad

TITLE: GTA04A4

Document Number:

REV:

Date: 31.01.12 10:13

Sheet: 16/20

(c) 2011 Golden Delicious Computers GmbH&Co. KG. Licensed under CC-BY-NC-SA.

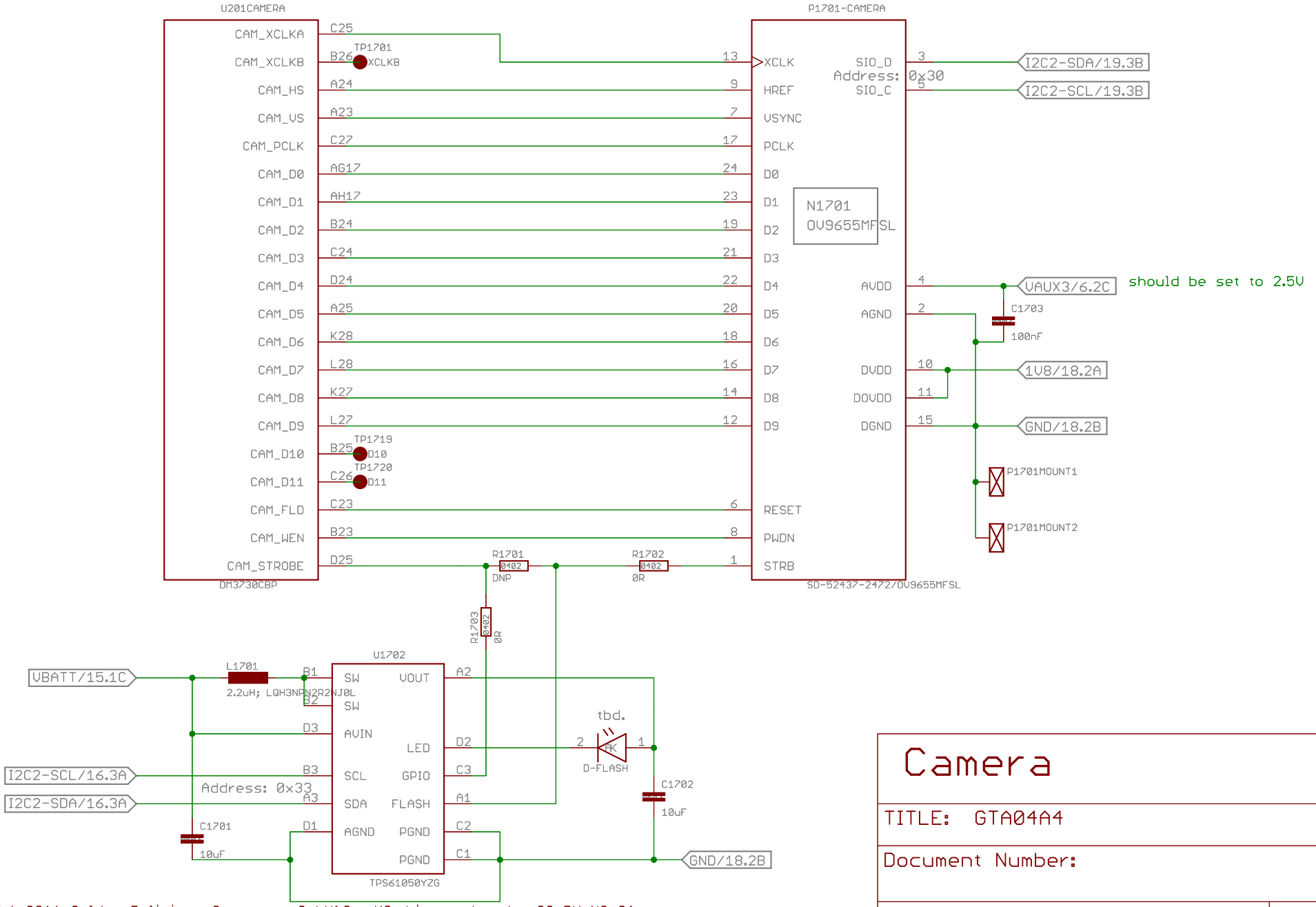

Camera

TITLE: GTA04A4

Document Number:

REV:

Date: 31.01.12 10:13

Sheet: 17/20

(c) 2011 Golden Delicious Computers GmbH&Co. KG. Licensed under CC-BY-NC-SA.

currently not implemented (no room)

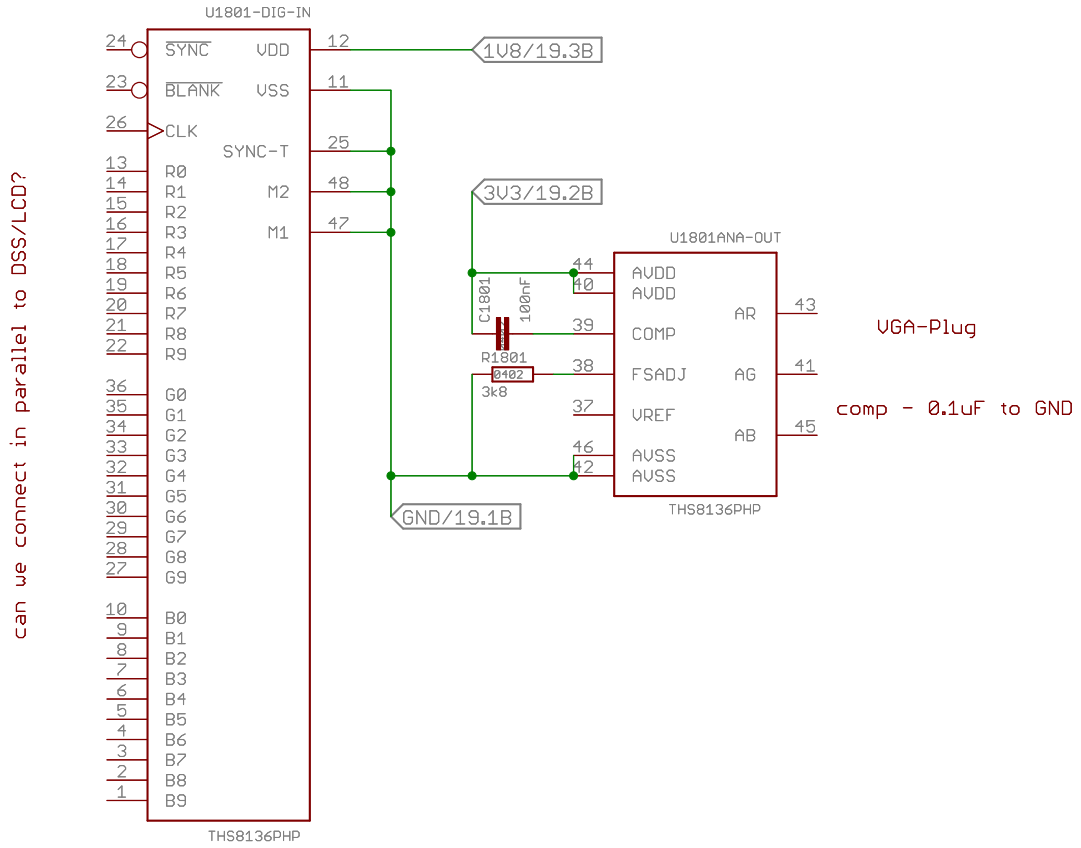

VGA & DVI Out

TITLE: GTA04A4

Document Number:

REV:

Date: 31.01.12 10:13

Sheet: 18/20

(c) 2011 Golden Delicious Computers GmbH&Co. KG. Licensed under CC-BY-NC-SA.

optional - can only be used if device is operated as a module without standard LCD

A/V, RS232, I2C, OTG, Power

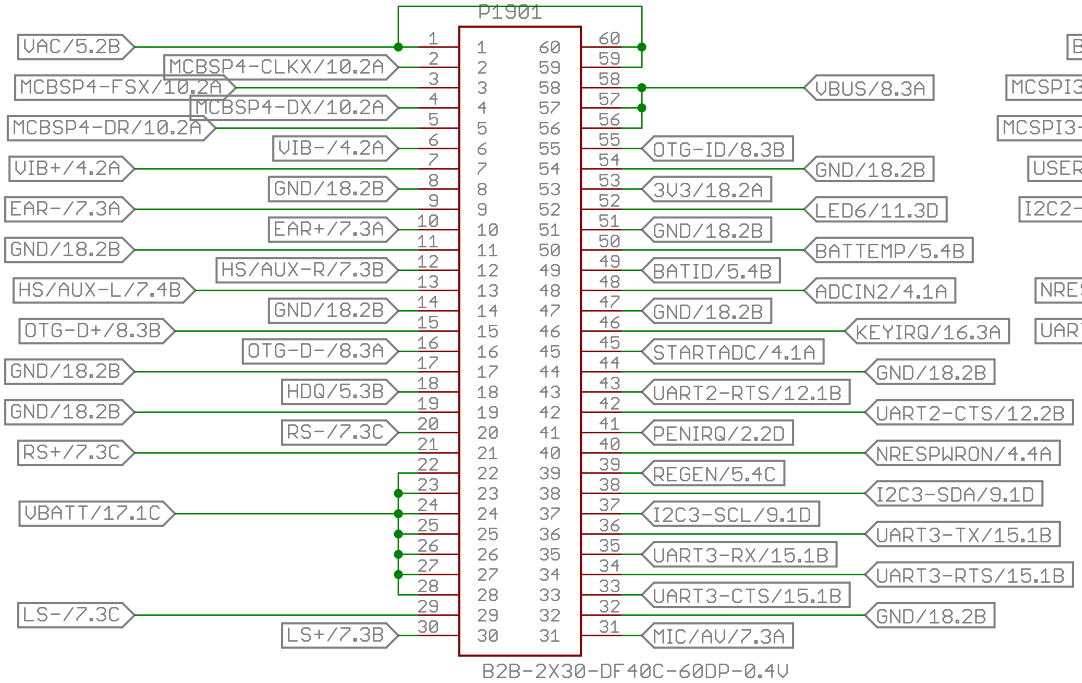

max. 0.3A per pin

Display, LED, WWAN-USB

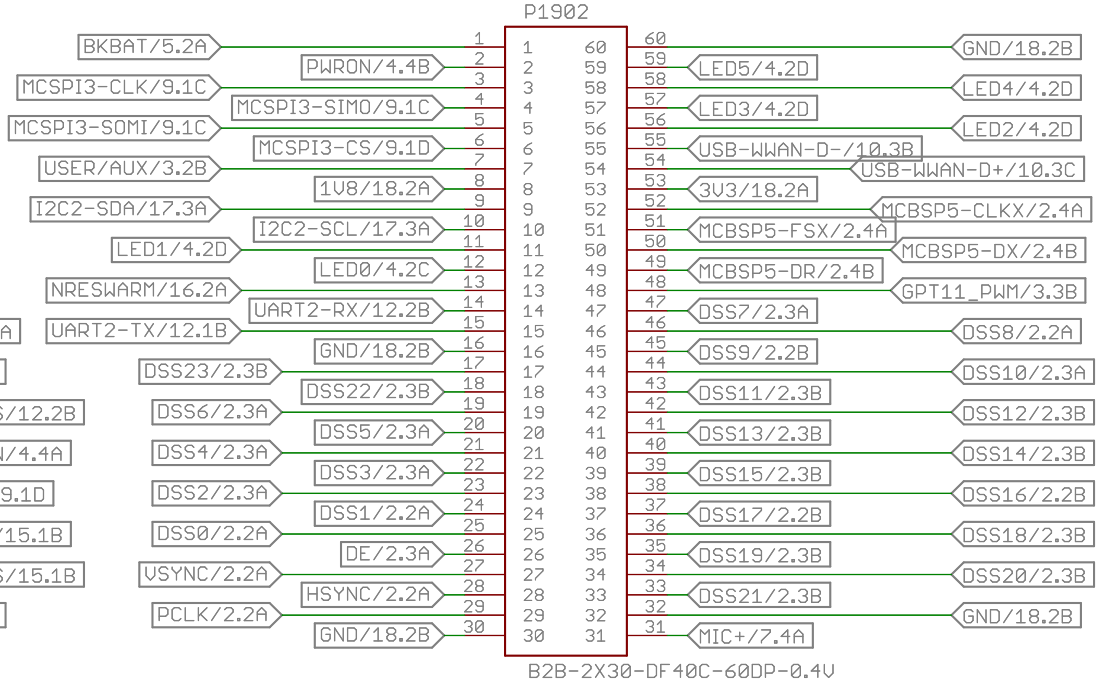

max. 0.3A per pin

Expansion Connectors

TITLE: GTA04A4

Document Number:

REV:

Date: 31.01.12 10:13

Sheet: 19/20

(c) 2011 Golden Delicious Computers GmbH&Co. KG. Licensed under CC-BY-NC-SA.

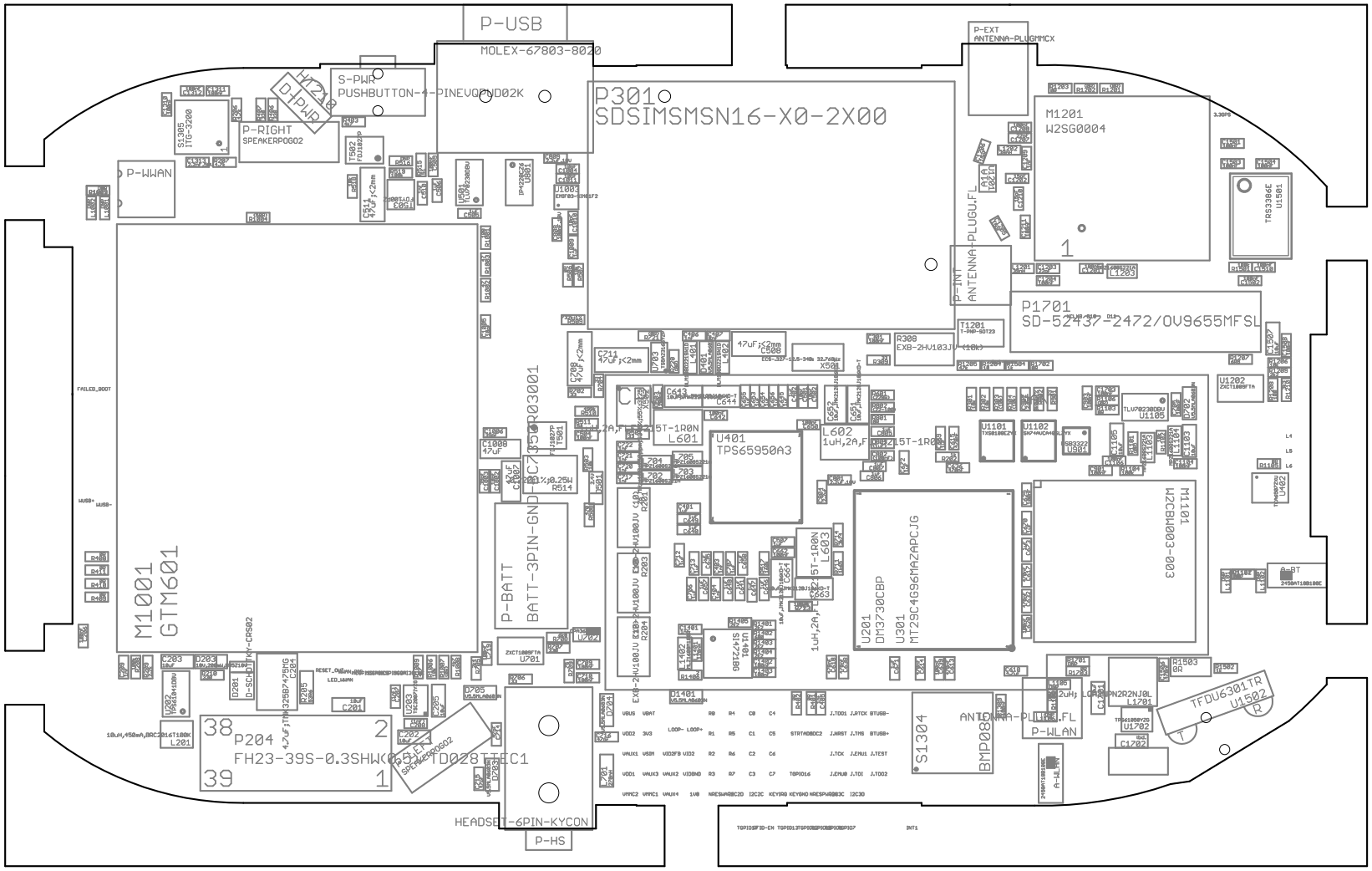
P-USB
MOLEX-67803-8020
S-PWR
PUSHBUTTON-4-PINEVQ0ND02K
P-RIGHT
SPEAKERPOG02
P-WWAN
P301
SDSIMSMSN16-X0-2X00
P-EXT
ANTENNA-PLUGMMCX
M1201
W2SG0004
P-INT
ANTENNA-PLUGU.FL
P1701
SD-52437-2472/OV9655MFSL
M1001
GTM601
P-BATT
BATT-3PIN-GND
U401
TPS65950A3
U201
DM3730CBP
U301
MT29C4G96MAZAPCJG
M1101
W2CBW003-003
P204
FH23-39S-0.3SHW(0.5)-TD028T-EC1
HEADSET-6PIN-KYCON
P-HS
S1304
BMP08
P-WLAN
TFDU6301TR
U1502

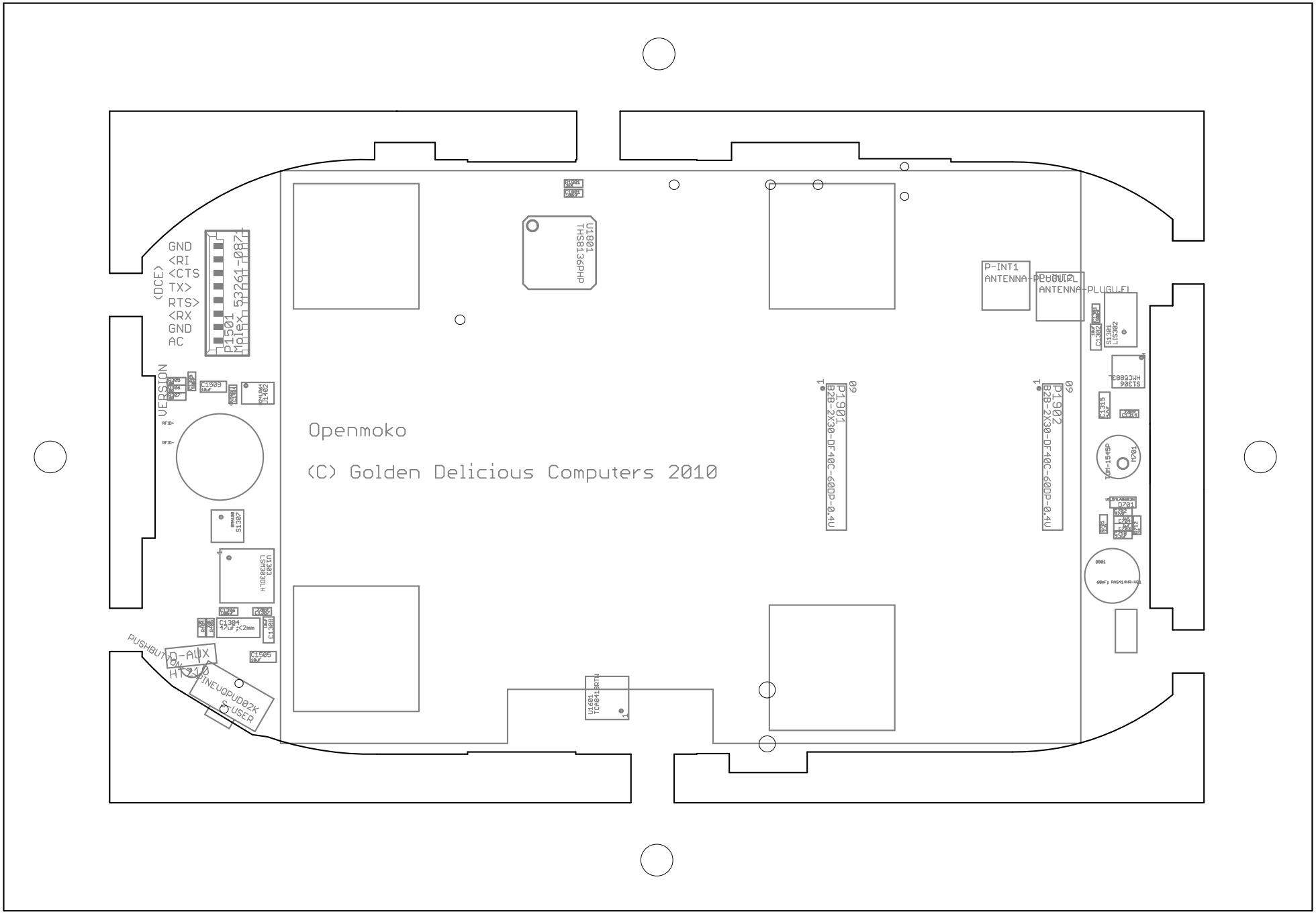
Openmoko
(C) Golden Delicious Computers 2010
P1501
Molex 53261-0871
(DCE)
GND
<RI
<CTS
TX>
RTS>
<RX
GND
AC
VERSION
U1801
THS8136PHP
P1901
B2B-2X30-DF40C-60DP-0.4V
P1902
B2B-2X30-DF40C-60DP-0.4V
P-INT1
ANTENNA-PLUGU.FL
P-INT2
ANTENNA-PLUGU.FL
U1601
TCA841BRTW
U1303
HT210
PUSHBUTTON-AUX
PINEVQPUD02K
S-USER
C1304
47uF;<2mm
C1305
C1309
C1308
C1302
C1315
S1301
LIS302
S1306
HMC5883L
D701
D201
S1307
C1509
U1402
RFID+
RFID-