AT1000 User Manual

V1.2

Contents

1. INTRODUCTION 3

ATTENTION 3
INSTRUCTIONS OF SAFETY 4
LEGAL NOTICE 4
ABOUT DOCUMENT 5
BATTERIES 5
PACKAGE CONTENTS 5

2. CHARACTERISTICS 6

BASIC CHARACTERISTICS 6
MECHANICAL CHARACTERISTICS 6
SIM CARD INSERT SCHEME 7
CONNECTING MICRO USB TO AT1000 7
ELECTRICAL CHARACTERISTICS 8
ACCESSORIES 8

3. PREPARATION 9

SOFTWARE REQUIREMENTS 9
DRIVERS 9
CONFIGURATOR 11
INSERTING THE BATTERIES 12

4. OPERATIONAL BASICS 14

PROFILES 14
EVENTS 15

5. CONFIGURATION 16

OPERATIONS MENU 16
GLOBAL PARAMETERS 17
GPRS settings 17
GPS fix settings 17
SMS settings 17
General settings 18
PROFILES PARAMETERS 22
Sleep 23
Data save 23
Data send 24
BATTERY SETTINGS 24
DEFAULT SETTINGS 24
Scenario #1 24
Scenario #2 25
Scenario #3 25
I/O SETTINGS 25

6. SMS COMMAND LIST 26

GETVER 26
GETSTATUS 27
GETINFO 27
GETOPS 27
GETGPS 28

7. UPDATING FIRMWARE TO THE LATEST VERSION 29
8. MOUNTING RECOMMENDATIONS 30
9. CHANGES LOG 31

1. INTRODUCTION

AT1000 is a terminal with GPS and GSM connectivity, which is able to determine the object's coordinates and transfer them via the GSM network. This device is perfectly suitable for applications where location acquirement of remote objects is needed. Device operates using internal batteries only and its main applications are tracking of objects which do not have onboard power supply.

Attention

Personal or portable computers to be connected to the device must comply with the requirements of DIN EN 60950-1.2003.

Do not disassemble the device more than it is allowed. If the device is damaged, the power supply cables are not isolated or the isolation is damaged, before unplugging the power supply, do not touch the device.

All wireless data transferring devices produce interference that may affect other devices which are placed nearby.

The device may be fitted only by qualified personnel.

The device must be firmly fastened in the predefined location.

The programming must be performed using a second class PC (with autonomic power supply).

The device is susceptible to water and humidity in environment with IP class greater than IP65.

Use only batteries provided by Teltonika. If wrong battery is used, the device may malfunction. Teltonika takes no responsibility for device damage caused by third party batteries.

Any installation and/or handling during a lightning storm is prohibited.

Please use cables provided with AT1000 device.
Teltonika is not responsible for any harm caused by using wrong cables for PC <-> AT1000 connection.

Teltonika reserves the right to change or modify the device in a way that feels is acceptable and is not in disagreement with terms and conditions.

Ensure that the batteries are not immersed in water. When stored, keep the device in a cool and dry place.

Ensure that device and batteries are not exposed to hot surfaces or direct sunlight.

When transporting, ensure that batteries are safe from metal articles and do not keep it with metal rings, chains, etc.

Do not damage battery with sharp objects.

Do not try to charge the battery – this may lead to explosion and/or other harms.

Instructions of safety

This chapter contains information on how to operate AT1000 safely. By following these requirements and recommendations, you will avoid dangerous situations. You must read these instructions carefully and follow them strictly before operating the device!

The device uses a 5V...7.2V DC batteries.

To avoid mechanical damage, it is advised to transport the AT1000 device in an impact-proof package.

The device is designed to be mounted in a zone of limited access. All related devices must meet the requirements of standard EN 60950-1.

Legal Notice

Copyright © 2010 Teltonika. All rights reserved. Reproduction, transfer, distribution or storage of part or all of the contents in this document in any form without the prior written permission of Teltonika is prohibited.

Other products and company names mentioned here may be trademarks or trade names of their respective owners.

About document

This document contains information about the architecture, mechanical characteristics, configuration and possibilities of the AT1000 device.

Acronyms and terms used in document

- PC – Personal Computer.
- GPRS – General Packet Radio Service.
- GPS – Global Positioning System.
- GSM – Global System for Mobile Communications.
- SMS – Short Message Service.
- AC/DC – Alternating Current/Direct Current.
- Record – AVL data stored in AT1000 memory. AVL data contains GPS and I/O information
- AVL packet - Data packet that is being sent to server during data transmission. AVL packet contains from 1 to 25 records.
- Profile – operating mode for AT1000 device. It consists of list of settings indicating how device should behave in certain situations.

Batteries

AT1000 is autonomous device which uses two R14 (IEC 60086 standard) batteries. Batteries used in this device are single charge Li based type and should have the following parameters:

- Voltage: 3.6V
- Nominal capacity: 5500mAh
- Max pulse current not less than: 2000mA

Teltonika recommended batteries are available for sale from Teltonika office or distributors . Only with these batteries correct device operation and (or) prevention of permanent damage to device is guaranteed.

Warning: use only the same sort of batteries in pair and do not mix old batteries with new ones.

Package contents

The AT1000 device is supplied to the customer in a cardboard box containing all the equipment that is necessary for operation. The package contains:

1. The AT1000 device.
2. Micro USB cable.
3. 2 x 3.6V batteries (optional with 4 additional batteries)
4. A disclaimer
5. Driver/softaware download link

2. CHARACTERISTICS

Basic characteristics

GSM / GPRS features:

- Teltonika TM1Q quad band module (850, 900, 1800, 1900 MHz)
- GPRS class 10
- SMS (text, data)

GPS features:

- No less than 20 channel receiver
- No less than -160 dBm sensitivity

Special features:

- Smart profile switching (any element dependant)
- Highly configurable data acquisition and sending
- Multiple geofence areas
- Real-time process monitoring
- Authorized number list for remote access
- Firmware update via GPRS or USB
- Configuration update via GPRS or USB port
- TCP/IP or UDP/IP protocol support
- 7500 record storing
- Extra long lifetime

Mechanical characteristics

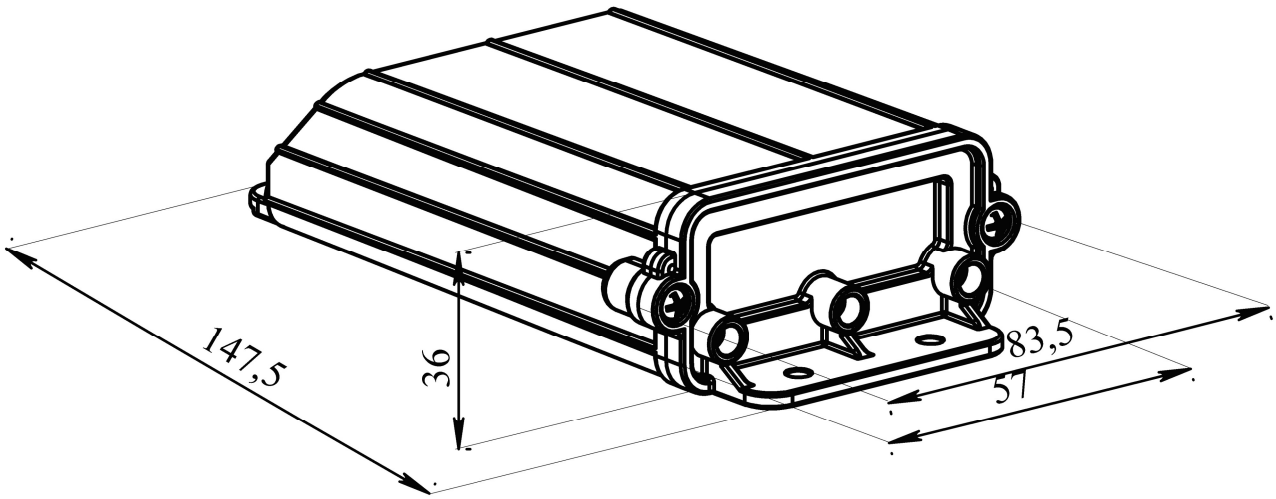

Figure 1. AT1000 dimensions

SIM card insert scheme

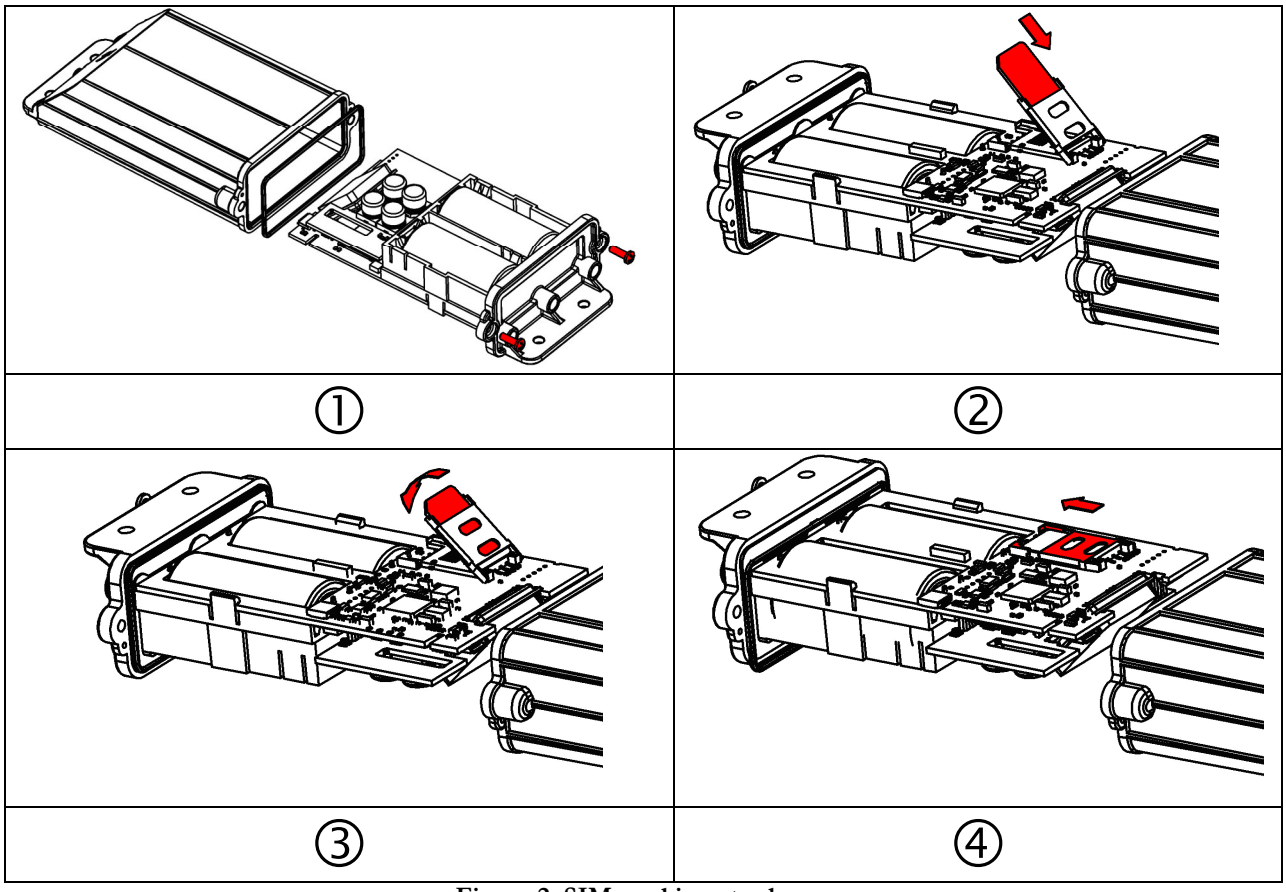

Figure 2. SIM card insert scheme

①	Open AT1000 device
②	Open SIM card lid and insert the SIM card
③	Close SIM card lid
④	Push SIM card lid in the shown direction to lock it and assemble AT1000

Connecting micro USB to AT1000

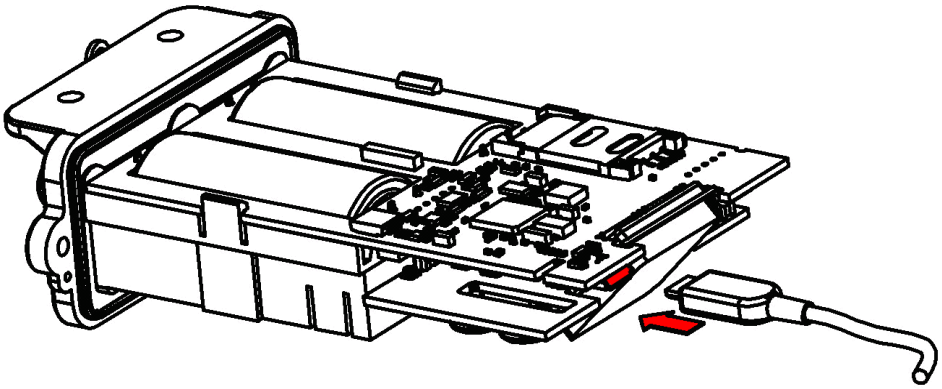

Figure 3. Connecting micro USB cable to AT1000

Electrical characteristics

AT1000:

- Power supply: 5...7.6V DC
- Operation temperature: -20°C ... +60°C

Batteries:

- Voltage: 3.6V
- Nominal capacity 5500mAh
- Max pulse current not less than 2000mA

The lifetime of AT1000 is subject to configuration and coverage of GPS and GSM signals. According to recommended default configuration expected lifetimes:

- 6 months - GPS acquire every 1 hour and data sending every 24 hour.
- 25 days - GPS acquire every 20 minutes and data sending every 1 hour.

Expected battery lifetime depends on:

- Temperature;
- Humidity;
- GSM level
- GPS satellite visibility
- Configuration of device – additionally monitored parameters, etc.

Expected battery self discharging is 1-3% per year in normal humidity and 20°C. .

Accessories

Note: Teltonika doesn't provide any additional equipment like panic Buttons or other, except of 1 – wire digital thermometer. This device is not included in AT1000 package and can be offered by special order only.

Digital thermometer

There is a possibility to monitor temperature via AT1000. In order to achieve such functionality digital thermometer has to be connected to device input. AT1000 supports 1-Wire Parasite-Power digital thermometer (DS18B20-PAR). Figure 4 shows thermometer connection scheme.

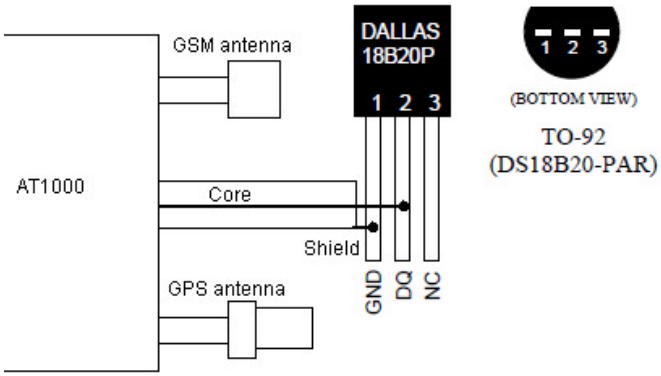

Figure 4. AT1000 and Dallas sensor connection

3. PREPARATION

Software requirements

- Windows XP with SP2 or later, Windows Vista, Windows 7
- MS .NET Framework V3.5 or later (http://www.microsoft.com or http://avl1.teltonika.lt/downloads/tavl/Framework/dotnetfx35setupSP1.zip).

Drivers

Please download Virtual COM Port drivers from Teltonika website: http://avl1.teltonika.lt/Downloads/AT1000/vcpdriver_v1.1_setup.zip.

IMPORTANT: AT1000 must be connected to PC when installing drivers.

Power up AT1000 and connect it to PC. It is done by removing insulating tape, which is separating batteries from the device.

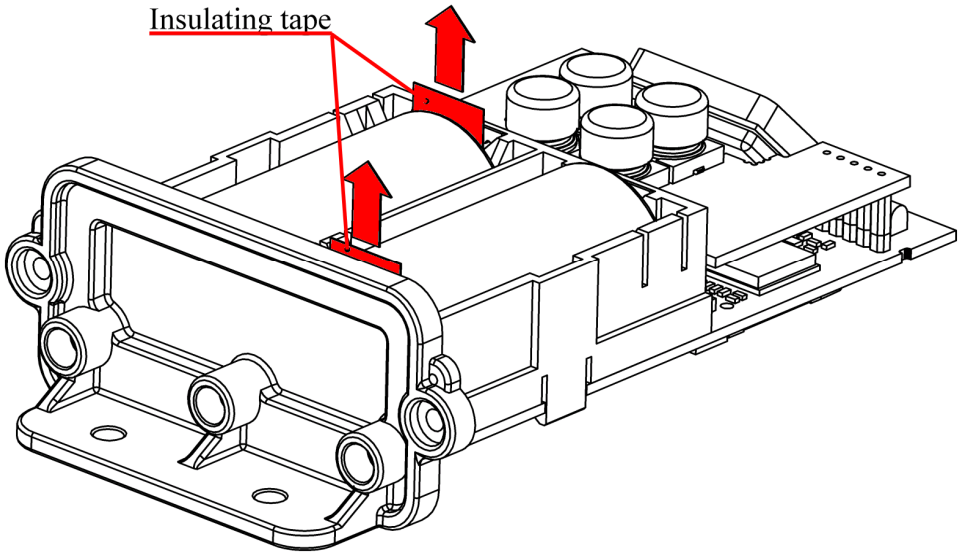

Figure 5. Removing insulating tape in AT1000

When AT1000 is connected for the first time to PC, you will be prompted with 'Found New Hardware' window. Click 'Cancel' to stop automatic installation process.

Figure 6. Found New Hardware window

Extract and launch VCPDriver_V1.1_Setup.exe. This driver is used to detect AT1000 device connected to the computer. Click 'Next' in driver installation window.

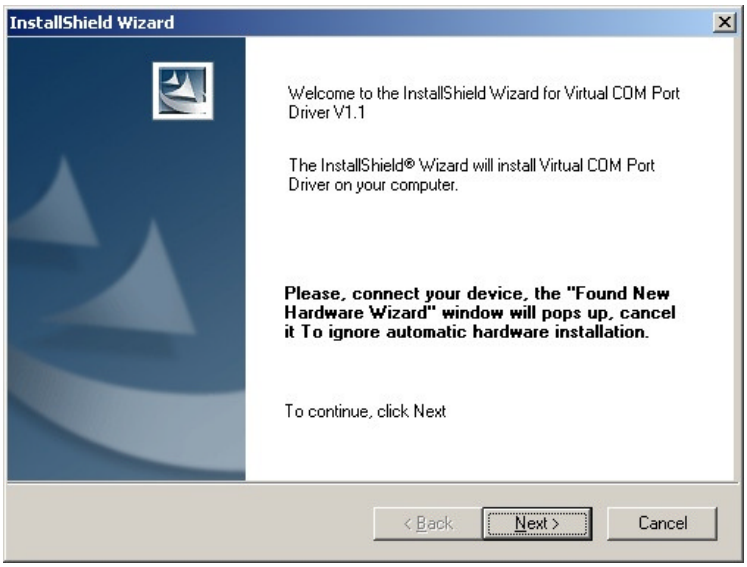

Figure 7. Driver installation window

Installation wizard will prompt you with several windows telling that software did not pass Windows Logo test. Click 'Continue Anyway' button to continue.

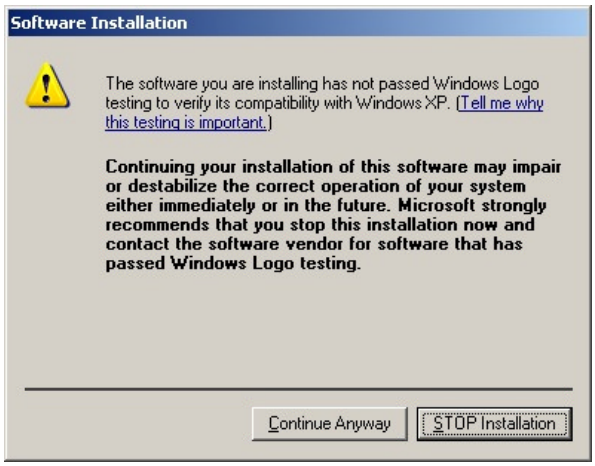

Figure 8. Windows Logo pass window

Setup will continue installing drivers and will display a window about successful process in the end. Click 'Finish' to complete installation.

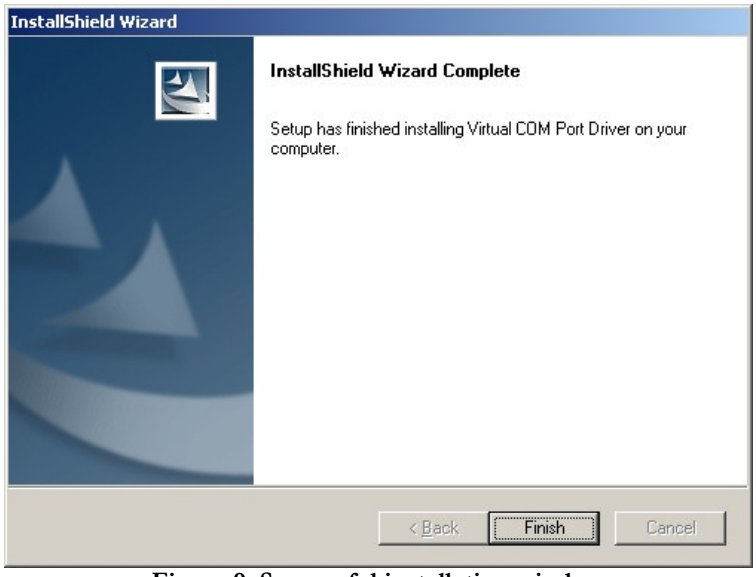

Figure 9. Successful installation window

Note: if drivers did not install successfully or device is not recognized, please make sure that device is connected to PC and reinstall the drivers.

Configurator

AT1000 Configurator is software used to setup the device. You can save or read the settings and read modem IMEI number with it. Please download the latest version of AT1000 Configurator from Teltonika webpage: http://avl1.teltonika.lt/Downloads/AT1000.

To use Configurator with AT1000, make sure that batteries are inserted in the device and it is connected to PC. In the configurator please choose correct COM port used by device. To find out which COM port is used follow these steps:

- Right-click on 'My Computer' and choose 'Properties';

- Go to 'Hardware' and click on 'Device Manager';
- Expand 'Ports (COM & LPT)' menu. See COM port number near 'STM Virtual COM Port'.

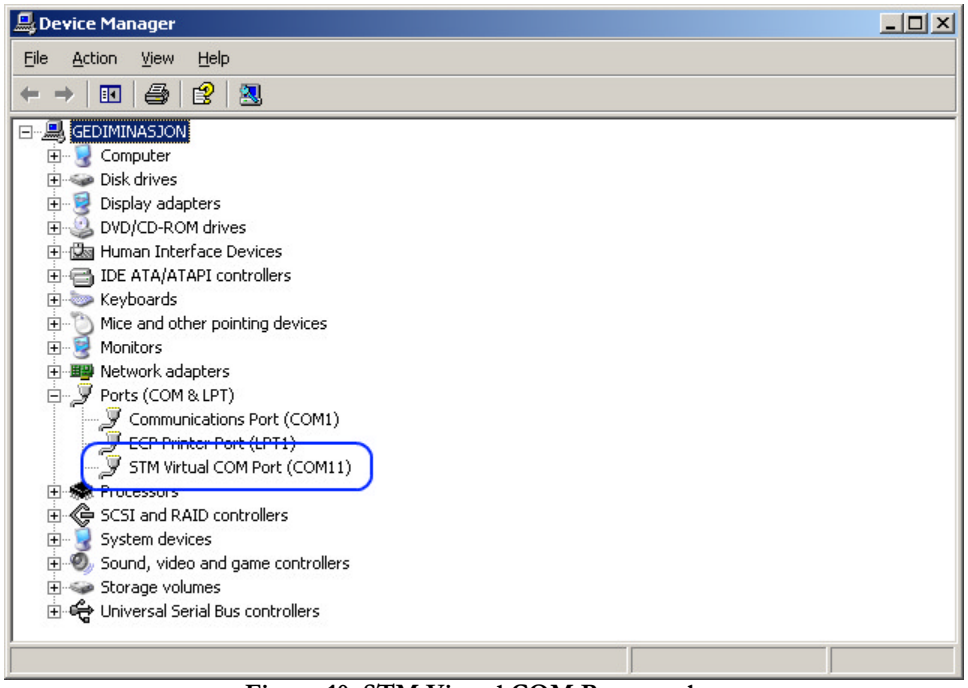

Figure 10. STM Virtual COM Port number

Inserting the batteries

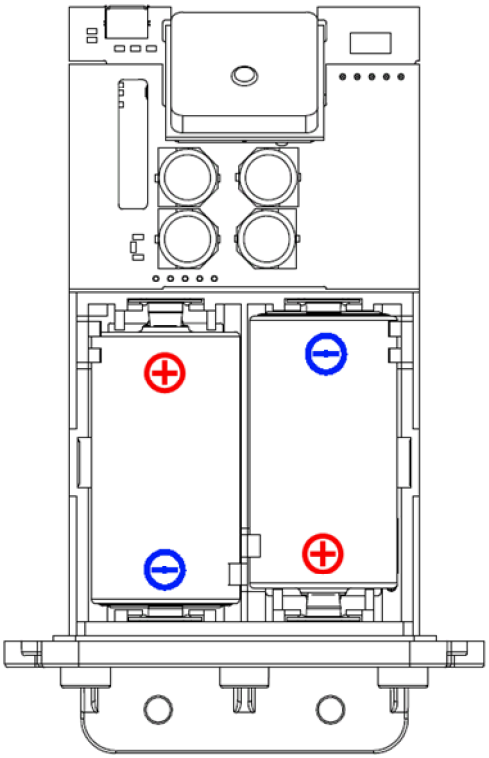

Figure 11. Inserting the batteries

Teltonika recommended batteries are available for sale from Teltonika office or distributors. Only with these batteries correct device operation and (or) prevention of permanent damage to device is guaranteed.

Warning: use only the same sort of batteries in pair and do not mix old batteries with new ones.

Note: *if inserting the batteries for the first time, make sure insulating tape is removed! In order not to discharge batteries, please remove them if not using the device. After inserting new batteries to the device, please remember to reset the battery level counter in the configurator. If new batteries are not inserted, do not try to reset this counter (more details about the battery level counter are described in user manual documentation).*

4. OPERATIONAL BASICS

Profiles

In order to preserve the battery, AT1000 is designed to stay in a sleep mode as long as possible. Device periodically (each 2 seconds) wakes up for a very short time and checks states of IO events. If IO event(s) state has changed, profile manager changes to profile according to logical sentences.

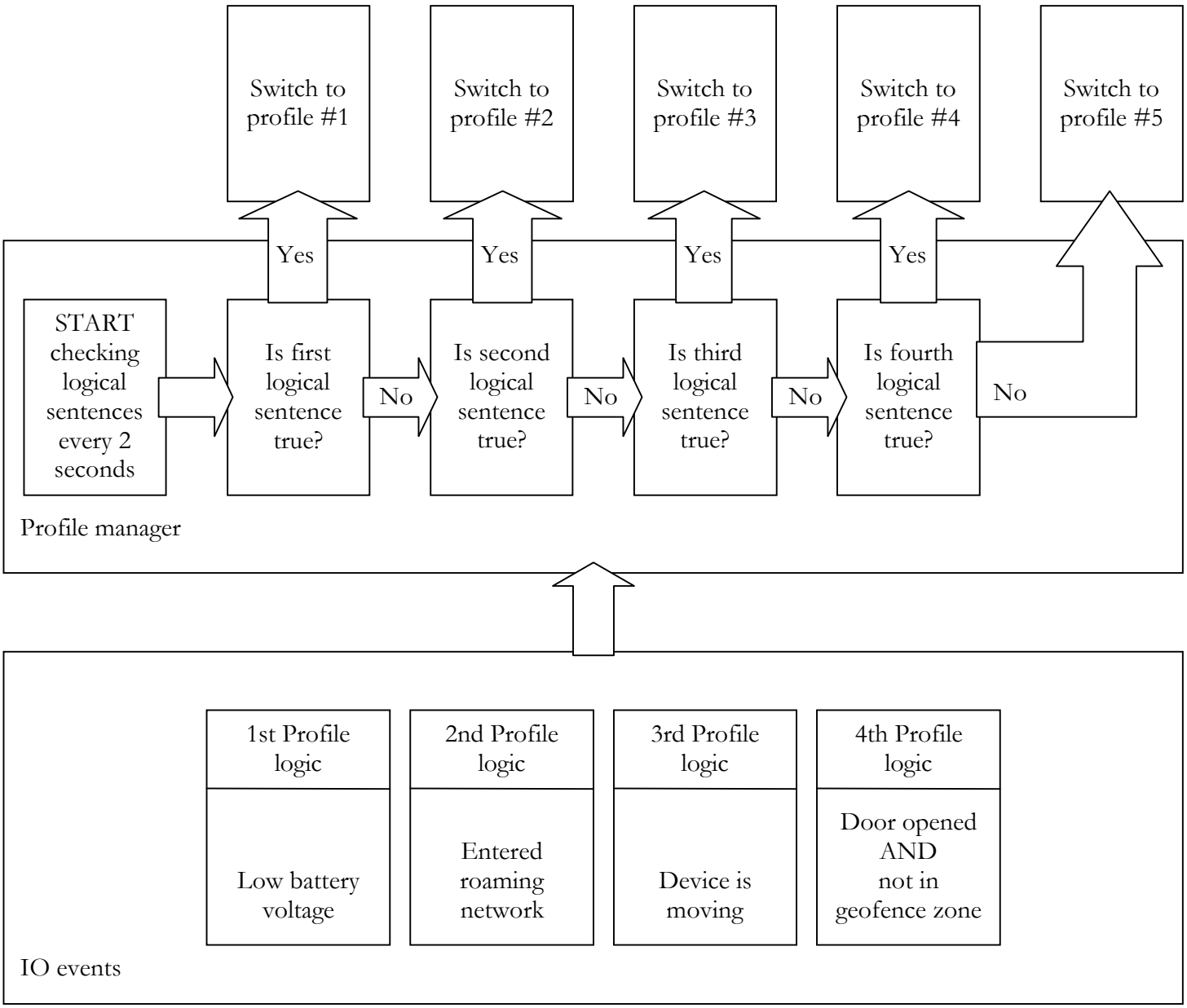

Figure 12. Profile switching diagram.

After device reset or startup, AT1000 always loads profile #1 as default. In the next 10 second period it checks all IO event conditions and switches to appropriate profile in case there are any events. If no – then device switches to profile #5 which is default profile for device when no conditions are met.

See profile manager configuration chapter for more information about logical sentence structure.

Events

I/O elements can generate events according to hysteresis algorithm. If I/O event operand "Hysteresis" is selected, events will be generated as it is shown in the illustration below:

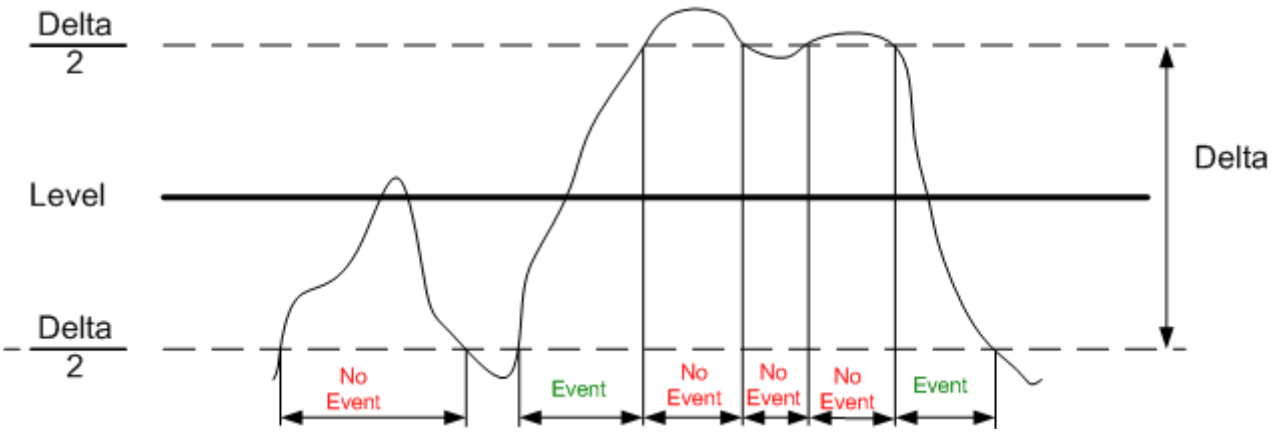

Figure 13. Event generation according hysteresis algorithm

AT1000 uses this method to calculate those IO element events that have Delta parameters: GPS speeding, GSM signal level and Analog input.

5. CONFIGURATION

Main AT1000 Configurator windows consist of three parts: operations menu (1), global parameters settings (2), profiles parameters settings(3) and battery parameters (4).

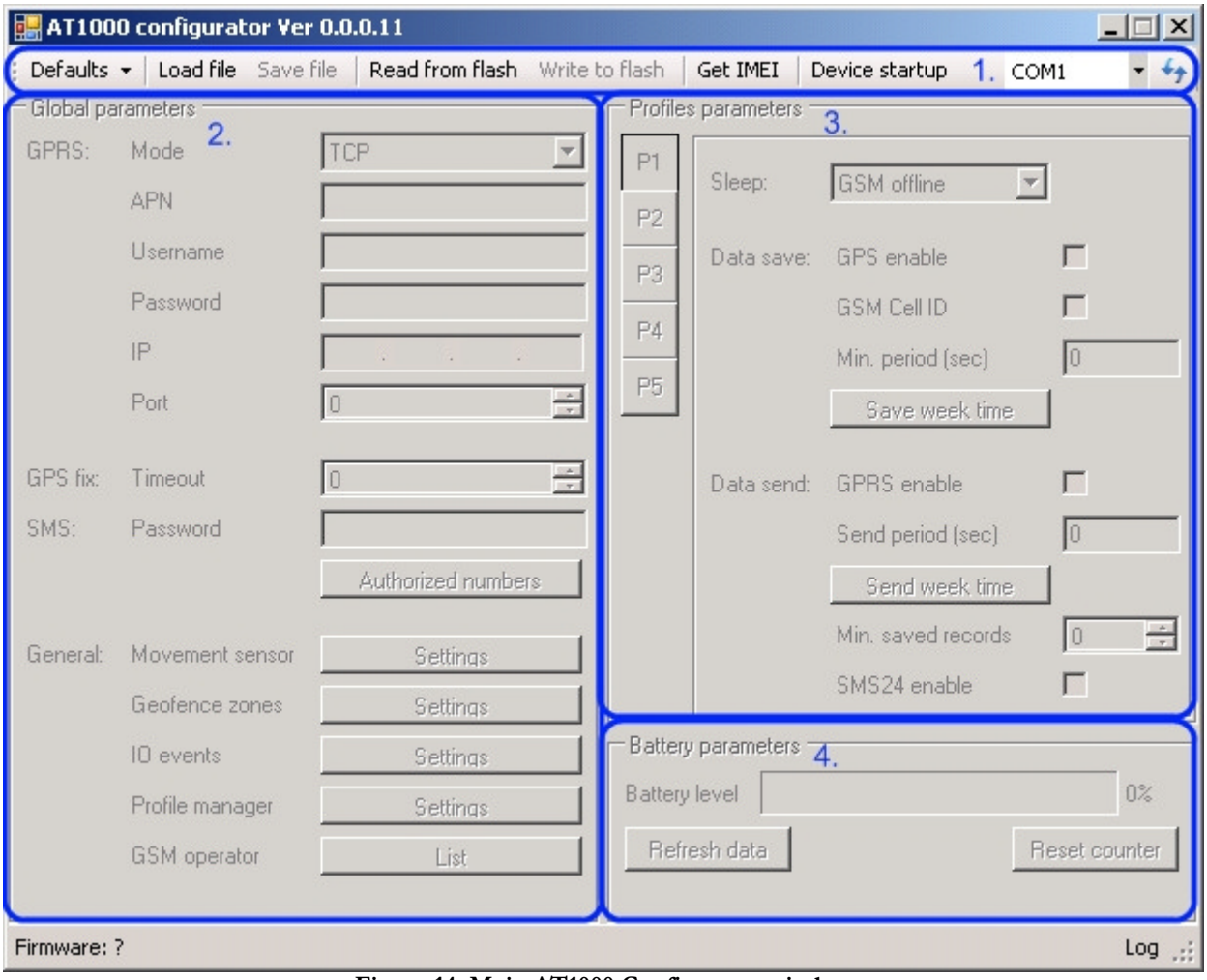

Figure 14. Main AT1000 Configurator window

Operations menu

This is a list of commonly used operations such as:

- Defaults: choose one of 3 available default settings for the device. Every time you launch Configurator software, you either have to load settings from file, or load default settings and modify values manually.
- Load from file: click this button to load device settings from file so you don't have to enter them by hand every time you want to configure the device.
- Save to File: click this button to save manually entered setting to a file.
- Read from flash: reads settings that are already stored in AT1000 device.
- Write to flash: saves the settings to AT1000 memory. Note, that you have to load these settings from file or enter them manually first.

- Get IMEI: reads AT1000 modem IMEI (International Mobile Equipment Identity) number. Note, that after you connect device to power supply, it takes several seconds to load modem – only then Configurator is able to read it. Otherwise it will be displayed as 'none'.
- Device startup: click this button to test data acquisition and data sending. This feature initiates position acquisition from the GPS satellites. After coordinates are received, data is sent to server as defined in global parameters.
- COM port: click this drop-down list to choose which COM port is used by AT1000 to connect to PC. See chapter 0 to find out number of the port.
- Refresh button: click it to refresh all available ports on PC. This button is used when you connect AT1000 to PC while Configurator software is already launched, but it did not detect Virtual COM Port yet.

Global Parameters

Global parameters are common settings for device and are used with every profile. These are GPRS settings, GPS fix settings, SMS settings and general settings.

GPRS settings

- Mode: select data transfer mode for GPRS connection – TCP/IP or UDP/IP;
- APN: (Access Point Name) this is operator provided parameter and is used to open GPRS connection in GSM network. Please contact your GSM operator to find out your APN.
- Username: APN username used to open GPRS connection in GSM network. In some cases it is not required and field is left blank.
- Password: APN password used to open GPRS connection in GSM network. In some cases it is not required and field is left blank.
- IP: this is destination server IP address to which AT1000 is sending data using GPRS.
- Port: this is destination server port number to which AT1000 is sending data using GPRS.

GPS fix settings

- Timeout: AT1000 is using this time interval (in seconds) when trying to establish its location. If it fails to do so in given time, device considers that GPS is not available at the moment.

SMS settings

- Password: enter a password for all incoming SMS to the device. Device will discard all recieved SMS with passwords that do not match the entered one.
- Authorized numbers: a list of GSM numbers – AT1000 will read messages only from listed number and discard all messages from other numbers. If no numbers are entered, AT1000 will read messages from all numbers. The first number is server GSM number – it is used to send SMS to server modem. Numbers have to be entered in international format without '+' sign.

Figure 15. Authorized numbers window

General settings

- Movement sensor: these parameters combined with onboard vibration sensor are used to define if device is moving. While measuring (during Scan time) device captures Vibration Count, after the end decision is done accord to equation (Scan Time / Average Time to Impulses) ≤ Vibration Count. If equation is true, then device is considered as moving.

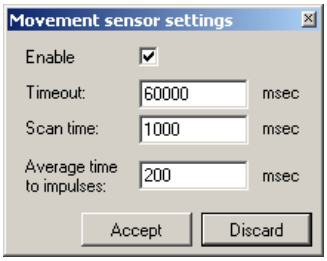

Figure 16. Movement sensor settings window

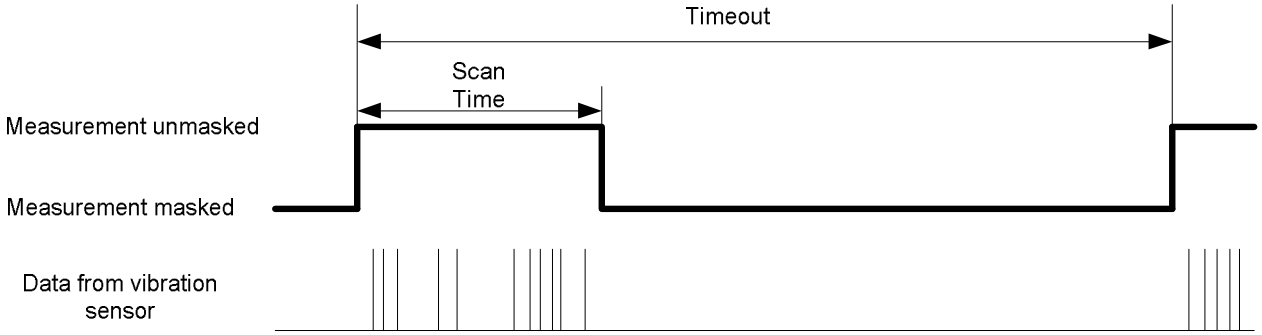

Figure 17. Movement sensor measurement diagram

- Geofence zones: these parameters allows to know if device is in certain area or not.

Geofencing Frame border is measured in meters. Zone Border feature is specially used in order to specify certain region within which crossing will not be indicated as event until border is cmpletely crossed (hysteresis-like principle).

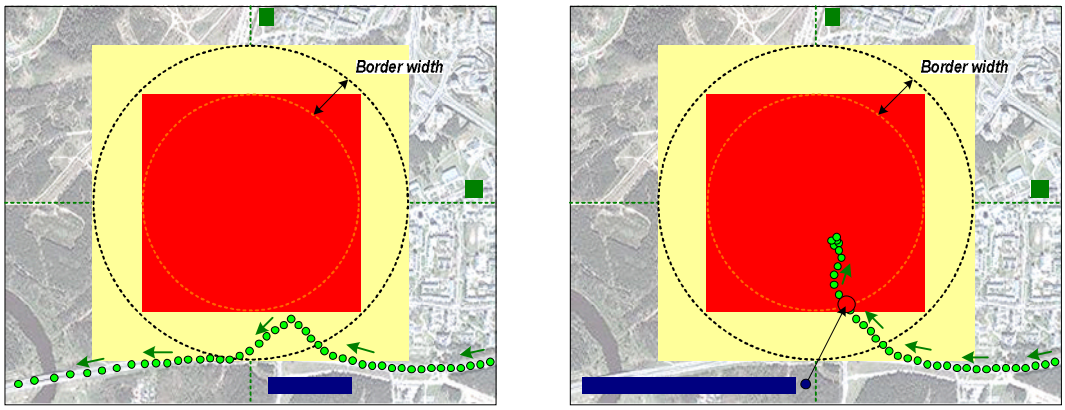

Figure 18. Geofence border working principle (1)

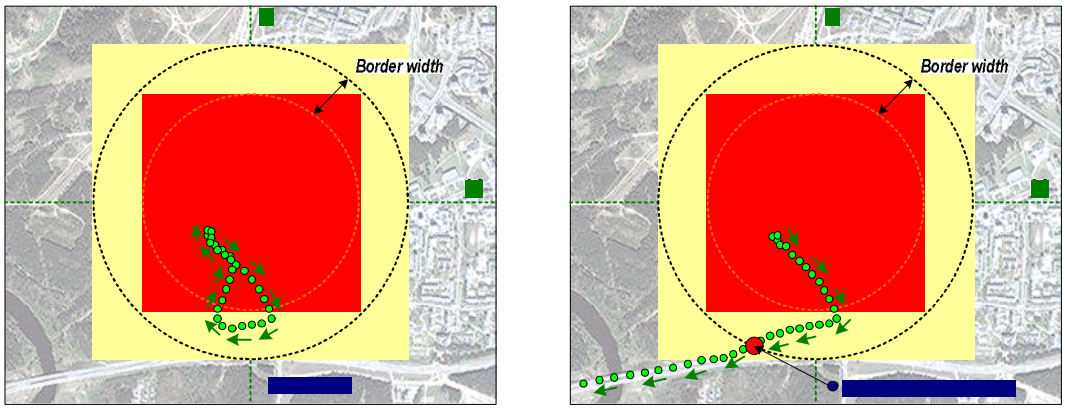

Figure 19. Geofence border working principle (2)

Geofence Shape: Individual Geofencing Zone shape selection. There are two shapes available: Circular or Rectangular.

Geofence Event Priority: Reserved for future uses, leave 0.

Geofence Enter Event: Individual Geofencing Zone Entering event generation functionality. If enabled – when device enters specified area, an event of selected priority will be generated.

Geofence Exit Event: Individual Geofencing Zone Exiting event generation functionality. If enabled – when Device exits specified area, an event of selected priority will be generated.

Geofence Center Longitude (X, degrees) / Geofence Left Bottom Corner Longitude (X1, degrees): Individual Geofencing Zone Center Longitude coordinate for Circular shape or Left Bottom Corner Longitude coordinate for Rectangular shape.

Geofence Center Latitude (Y, degrees) / Geofence Left Bottom Corner Latitude (Y1, degrees): Individual Geofencing Zone Center Latitude coordinate for Circular shape or Left Bottom Corner Latitude coordinate for Rectangular shape.

Geofence Radius (R, meters) / Geofence Upper Right Corner Longitude (X2, degrees): Individual Geofencing Zone Radius measured in meters for Circular shape or Upper Right Corner Longitude coordinate for Rectangular shape.

Not Used / Geofence Upper Right Corner Latitude (Y2, degrees): Individual Geofencing Zone Right Corner Latitude for Rectangular shape. Not used for Circular shaped zone.

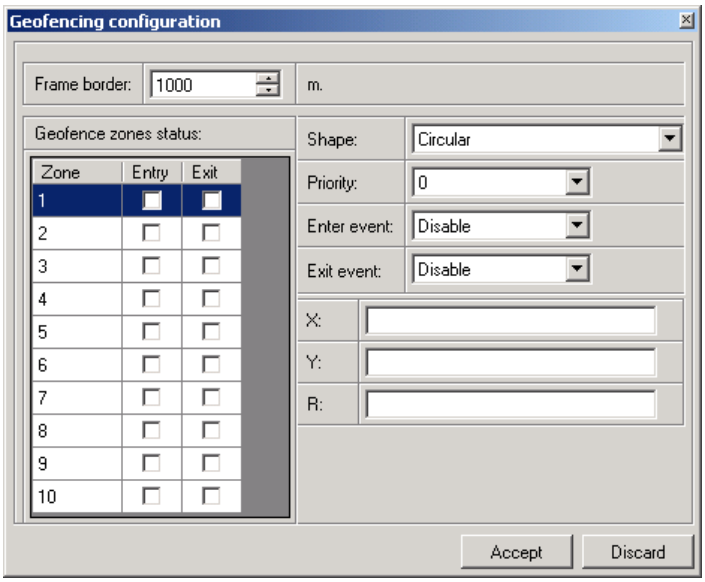

Figure 20. Geofence settings window

- IO events: according to these settings device will respond changing circumstances and include certain information to records.

  Low Battery: information that device battery is low.
  Critical Battery: information that device battery is critically low.
  Roaming: information that device is in roaming state.
  GPS timeout: information that GPS fix is not obtained within predefined time.
  GPS speeding: information about device movement speed.
  GSM level: information about GSM signal strength.
  Land/water map: information about whether device is on water or on land.
  Temperature*: temperature measurement information.
  Analog input*: analog input voltage measurement information.
  Alarm button*: alarm button state information.
  Cell ID: information about GSM cell ID number.

* - Temperature sensor, Analog input and Alarm button shares the same hardware so only one feature can be used at the time. More information about IO events can be found in Profile manager section.

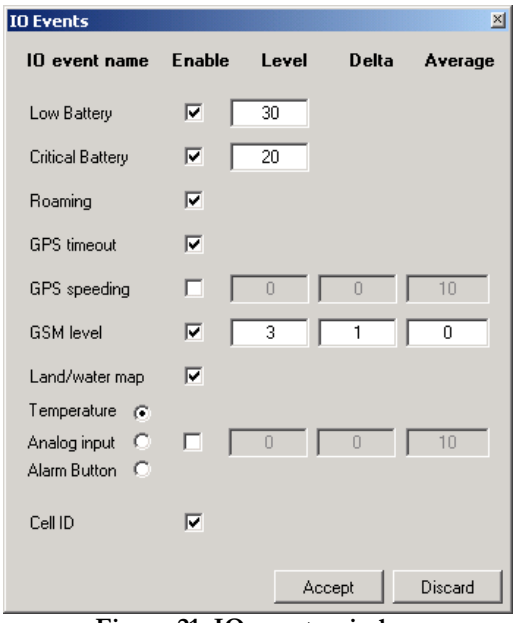

Figure 21. IO events window

Level field and delta indicate a value level – when it exits or enters value +- delta/2, device generates an event. I.e. to generate speeding event when speed reaches 80 km/h enter level value 40 and delta value 80. This would make low level of speed 0 km/h (40 – 80/2) and high level 80 km/h (40 + 80/2). When current speed exits this range, event will be triggered. As alternative you can also enter level 90 and delta 20. This would trigger event when speed becomes 80...100 km/h. Battery level is measured in percentage, speeding measured in km/h, GSM level is measured in point with maximum value of 5.

Average field is not currently in use and is reserved for future functionality.

- Profile manager: managing between profiles is done via Profile Manager. Basically it is done via logical sentences, which are collection of criteria encoded in 50 characters.

If external circumstances are identical to those stated in logical sentence, profile switching occurs. There are four sentences: getting from first to fourth profile. Switching to fifth profile occurs when there are no valid sentences which matches to IO events.

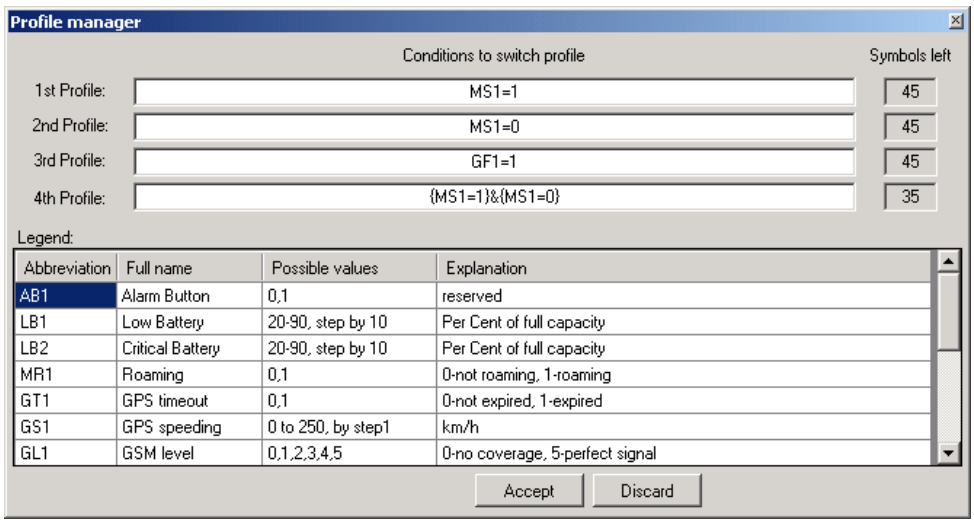

Figure 22. Profile manager window

Table 1. Legend of logical sentence parameters

Abbreviation	Full name	Possible values	Explanation
AB1	Alarm Button	0,1	0-alarm button off, 1-on
LB1	Low Battery	20-90, step by 10	Per Cent of full capacity
LB2	Critical Battery	20-90, step by 10	Per Cent of full capacity
MR1	Roaming	0,1	0-not roaming, 1-roaming
GT1	GPS timeout	0,1	0-not expired, 1-expired
GS1	GPS speeding	0 to 250, by step1	km/h
GL1	GSM level	0,1,2,3,4,5	0-no coverage, 5-perfect signal
LM1	Land/water map	0,1	0-water, 1-land
DT1	Temperature Dallas	-225 to 850,step by 1	from-22,5`C to 85`C, step 0,1`C
AI1	Analog input	0 to 3300,step by 1	from 0mV to 3300mV,step 1mV
CI1	Cell ID	0 to 65000	0-no cell ID, 1-65000 cell ID
MS1	Movement sensor	0,1	0-standing, 1-moving
GF1	Geofencing (global)	0,1	0-no geofencing captured, 1-geofencing captured
Z01-z10	Geofencing zones 1 to 10	0,1	0-outside zone,1-inside zone

Example of good logical sentence: MR1=0&{{CI1=1|GT1=0}^AI1<3000}

Incorrect string elements of logical sentence: {} }{ {* *} and double operators *!=, w*here * represents table 2 operators excluding { and }.

Table 2. Operators used in logical sentences

Operator	Operation
=	Equal
!	Not equal
>	More
<	Less
&	AND
|	OR
^	XOR
{	Matching to }
}	Matching to {

- Valid GPRS operator list: contains list of up to 200 accepted operator codes. Only in these operators network data can be sent. If operator list left empty, GPRS is available with all operators available. List of GSM operator codes: http://en.wikipedia.org/wiki/Mobile_Network_Code

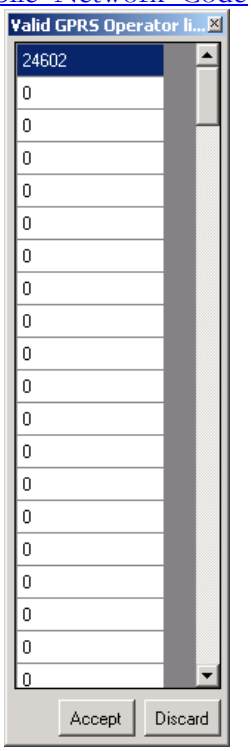

Figure 23. Valid GPRS operator list window

Profiles parameters

This set of parameters applies for device only when it is operating in appropriate profile. To choose a profile click on 'P1', 'P2', 'P3', 'P4' or 'P5' and enter desired values. Refer to profile switching logic chapter to find out correct settings for your AT1000 device.

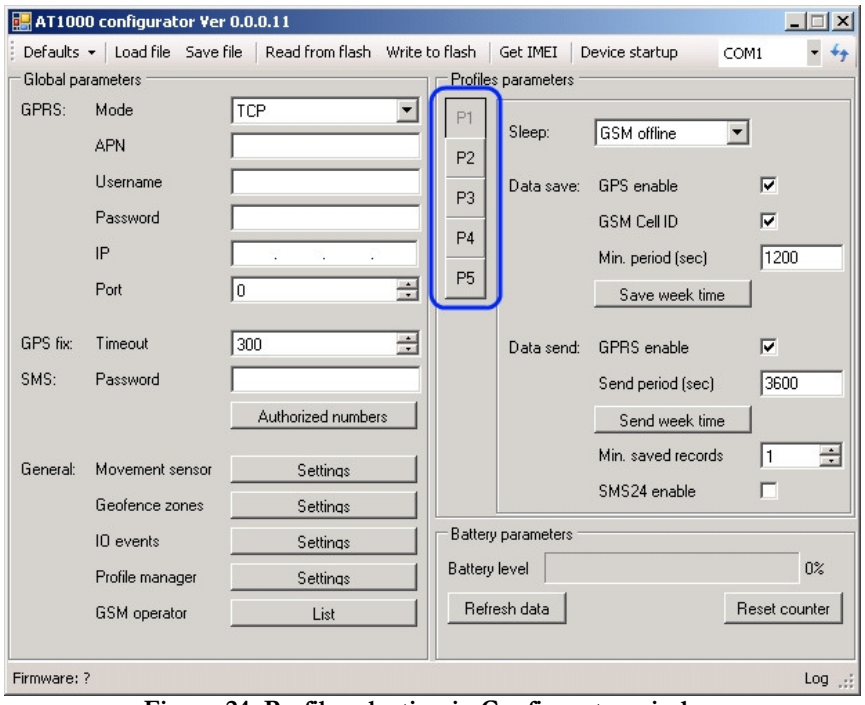

Figure 24. Profile selection in Configurator window

Sleep

Indicates what to do with the modem when device is not sending any data – either to keep it online or switch it off to save battery (highly recommended in most cases).

Data save

- GPS enable: enables or disables GPS data acquisition in this profile.
- GSM Cell ID: enables or disables ability to acquire GSM Cell ID
- Min. Period: time interval in seconds, when device is trying to establish its location and make a record.
- Save week time: if 'Min. Period' value is 0, then AT1000 uses this table when to make records. You can set the time in 10 minute intervals and choose weekdays to do it.

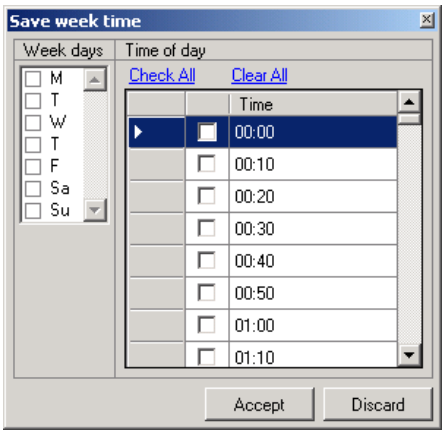

Figure 25. Save week time table

Data send

- GPRS enable: enables or disables GPRS in this profile
- Send Period: time interval in seconds, when device is trying to send recorded data to the server.
- Send week time: if 'Send Period' value is 0, then AT1000 uses this table to send records. You can set the time in 10 minute intervals and choose weekdays to do it. The table is same as for data recording ('Save week time' table).
- Min. Saved Records: every time AT1000 makes attempt to connect to the server, it checks if it has at least predefined number of records to send. If it has less records than the value of this field, it does not connect to the server and waits for next attempt after time, entered in 'Send Period' field or 'Send week time' table. If it has enough records, device connects to the server and sends them.
- SMS 24 enable: enables ability to send data as binary SMS containing max 24 records. Destination modem number is entered in 'Authorized numbers' table, 'SMS settings' under 'Global parameters' menu. AT1000 uses this method when it is not allowed to connect to server using GPRS due to operators listed in the 'GSM Operators' table.

Note: since AT1000 is designed to stay in sleep mode to preserve the battery, it establishes new GPS connection every time it wakes up which takes some time. Acquire and send intervals may have a small delay if 'Save Week Time' table or 'Send Week Time' tables are used.

Battery Settings

AT1000 is able to monitor battery usage as percentage using internal counter. When new batteries are inserted, click 'Reset Counter' button to start calculating battery level from the beginning. **Do not reset the battery level counter if not inserting new batteries!** Click 'Refresh Data' button to see current battery level.

Default settings

AT1000 has 3 preconfigured templates for 3 different tracking scenarios: tracking mobile objects, tracking international objects and tracking shipping containers. Only essential values are present, since server IP, geofence zones and some other settings are subject to individual configuration for every case.

Scenario #1

Designed for mobile objects security:

- While moving collect data every 20 minutes, send data every 1 hour;
- While idle collect and send data every 24 hours;
- If geofence zone crossed: collect data every 5 minutes and GSM modem is always online.

Expected battery lifetime is 3 months if object moves about 8 hours a day with no alarm captured. Configuration for this scenario is hardcoded into default profile #1.

Scenario #2

Designed for customs/shipment transit tracking:

- While moving collect data every 1 hour, send data every 12 hours;
- While idle collect and send data every 24 hours;
- If geofence zone crossed: collect data every 5 minutes and GSM modem always online.

Expected battery lifetime is 6 months with no alarm captured. Configuration for this scenario is hardcoded into default profile #2.

Scenario #3

Designed for shipping containers tracking:

- While moving collect data every 1 hour, send data every 12 hours;
- While idle collect and send data every 24 hours;
- If object distance from coastline more than 30km, do not enable GSM modem;
- When container doors are open, collect data every 5 minutes and GSM modem always online if object is distanced less than 30km from coastline;
- If device is unable to get GPS fix, but under GSM coverage, records GSM Cell ID;
- If geofence zone crossed, collect data every 5 minutes and GSM always online.

Expected battery lifetime is more than 6 months with no alarm captured. Configuration for this scenario is hardcoded into default profile #3.

I/O settings

When all I/O elements are disabled, AVL packet comes with GPS part only. After enabling I/O element(s) AVL packet contains both GPS and I/O parts.

List of available I/O elements includes I/O id, names, units, minimum and maximum values.

Table 3. Property ID of I/O elements.

Property ID in AVL packet	Property Name	Bytes	Description
1	Battery level	2	0-100 %
9	Analog Input	2	0 – 3300 mV
21	GSM Signal Strength	1	Signal strength level 0 (lowest) – 5 (highest)
22	Current profile	1	Profile Number 1-5
53	Alarm button	1	0 - OFF; 1 - ON
72	Temperature sensor	2	10*Degrees (^{O}C)
101	Critical Battery	1	0 - normal state; 1 - critical batery state
102	Land Water Map	1	0-water; 1-land
103	Battery Resistance	2	Battery Resistance in Ohms
200	Cell ID	2	GSM Operator Cell ID
210	GpsSpeed	2	km/h
238	GPS Timeout	1	0 - not in timeout; 1 - GPS timout reached trying to get fix
239	Roaming Mode	1	0 - not in Roaming mode; 1 - in Roaming mode
240	Movement sensor	1	0 - not moving; 1 - moving

6. SMS Command list

Every SMS command begins with password. Please check it in SMS settings. If password field is blank, then every command begins with space character. I.e. '<password><space>getgps' or '<space>getgps' when password field is blank.

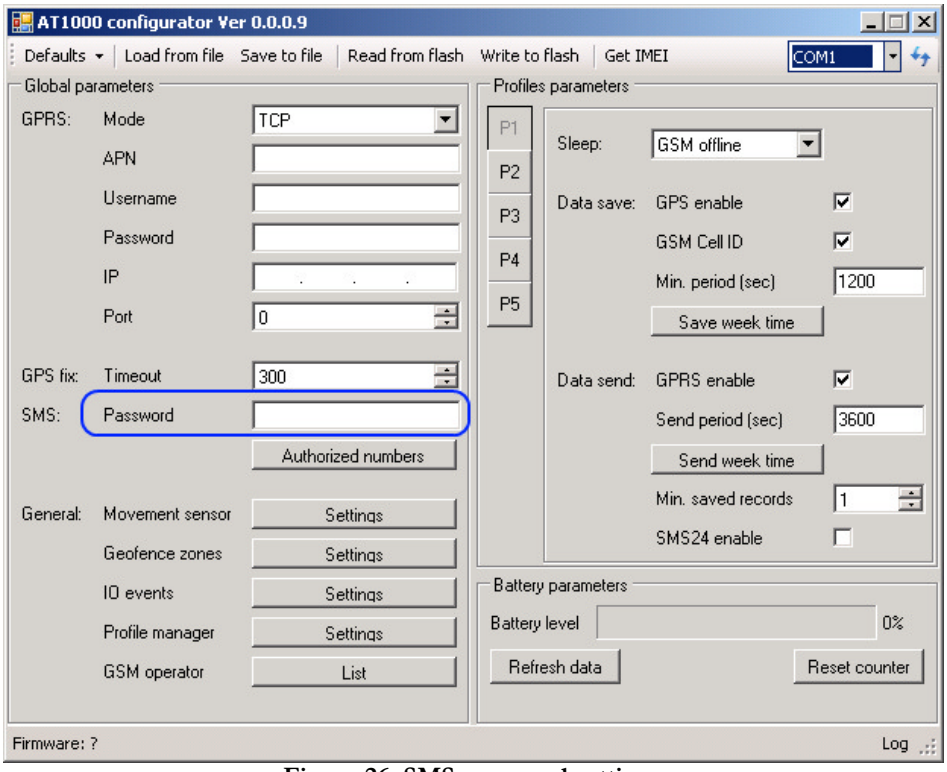

Figure 26. SMS password settings

Also AT1000 accepts commands only from authorized and/or server modem numbers. If 'Authorized Numbers' table is left blank, then AT1000 accepts commands from any number.

SMS commands are:

- getver – gets firmware version;
- getstatus – current status about device and general working conditions;
- getinfo – statistic and other information about device;
- getops – provides a list of currently visible GSM operators;
- getgps – sends last GPS fix information – coordinates, time, etc.

getver

Response details	Description
Code Ver	Firmware version
Device IMEI	IMEI
Device ID	Device ID is used to detect which type of configuration to load
Bootloader Ver	Version of modem application
Modem REV Ver	Modem Firmware version

Example: Code Ver:00.00.29 Device IMEI:353976010139156 Device ID:000001 Bootloader Ver:03.13 Modem REV Ver:05.95.00

getstatus

Response details	Description
Data Link	Indicate module connection to server at the moment: 0 – Not connected, 1 – connected
GPRS	Indicate if GPRS is available at the moment
Phone	Voice Call status: 0 – ready, 1 – unavailable, 2 – unknown, 3 – ringing, 4 – call in progress, 5 – asleep
SIM	SIM Status: 0-ready, 1-pin, 2-puk, 3-pin2, 4-puk2
OP	Connected to GSM Operator: Numerical id of operator
Bat	Battery charge level [0-5] (not used)
Signal	GSM Signal Quality [0-5]
Service	GSM service availability (0 – unavailable, 1 – available)
NewSMS	Indicate if new message received
Roaming	0 – Home Network, 1 – roaming
SMSFull	SMS storage is full? 0 – ok, 1 – SMS storage full

Example: Data Link: 0 GPRS: 1 Phone: 0 SIM: 0 OP: 24602 Bat: 4 Signal: 5 Service: 1 NewSMS: 0 Roaming: 0 SMSFull: 0

getinfo

Response details	Description
INI	Device Initialization Time
RTC	RTC Time
RST	Restart Counter
ERR	Error Counter
SR	Number of Sent Records
BR	Number of broken records
CF	Profile CRC Fail counter
FG	Failed GPRS counter
FL	Failed link counter
UT	UPD Timeout counter
SMS	Sent SMS Counter
SAT	Average satellites
CP	Current profile
PB0	Profile0 loads counter
PB	Number of profile loads/changes
PD#	Profile# loads counter

Example: INI:2007/8/24 10:15 RTC:2007/8/24 12:43 RST:2 ERR:11 SR:182 BR:0 CF:0 FG:0 FL:0 UT:0 SMS:2 SAT:5 CP:5 PB0:0 PB:1 PD0:0 PD1:1 PD2:0 PD3:0 PD4:0 PD5:0

getops

Response details	Description
LIST	Returns list of current available allowed operators.

Example: (2,”LT BITE GSM”,”BITE”,”24602”),(3,”OMNITEL LT”,”OMT”,”24601”),(3,”TELE2”,”TELE2”,”24603”),,(0-4),(0-2)

getgps

Response details	Description
Sat	Count of currently available satellites
Lat	Latitude (Last good Latitude)
Long	Longitude (Last good Longitude)
Alt	Altitude, m
Speed	Ground speed, km/h
Dir	Ground direction, degrees
Date	Current date
Time	Current GMT time

Example: Sat:7 Lat:54.71473 Long:25.30304 Alt:147 Speed:0 Dir:77 Date: 2007/8/24 Time: 13:4:36

7. UPDATING FIRMWARE TO THE LATEST VERSION

Teltonika is constantly working on improvement of the devices, and strongly recommends using the latest versions of the firmware.

AT1000 Updater is software used to update the device with the latest firmware (FW) version. Please contact your local vendor for the latest FW version available.

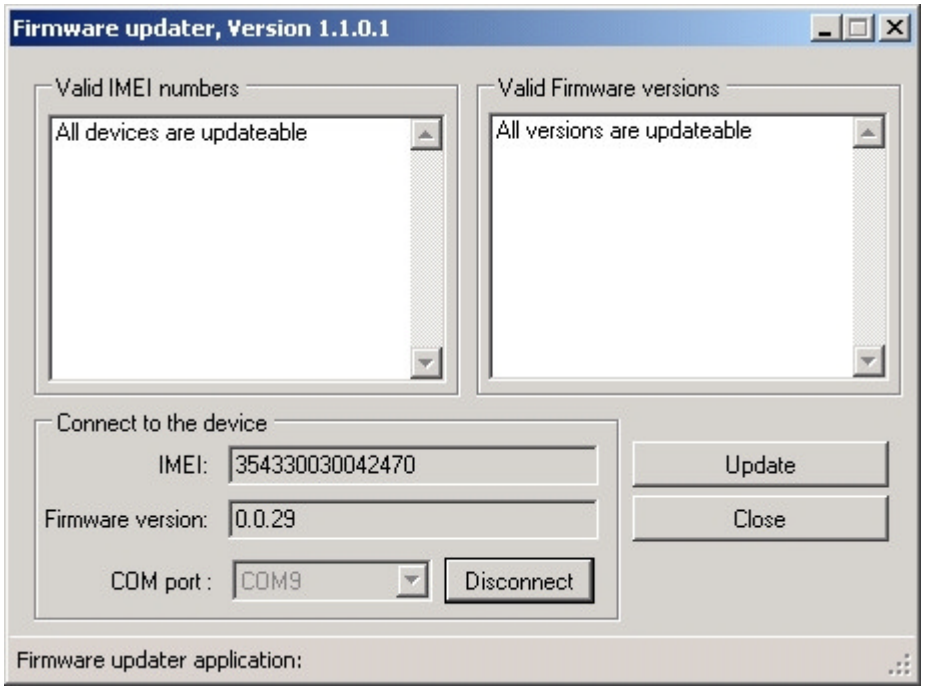

Figure 27. Updater application

Steps to update FW version successfully:

1. Insert the batteries into AT1000. Connect the device to the PC using the USB cable provided with AT1000 device.
2. Launch the Updater. Select COM port that is using AT1000. Press Connect button.
3. After the IMEI and FW version are detected, press Update button.
4. Please wait while loading FW to AT1000 device. Do not interupt the update or disconnect the device until the FW updating is complete!

8. MOUNTING RECOMMENDATIONS

Attach AT1000 to a surface in a vertical position with GPS antenna facing upper part of case. Make sure device gets as much of clear view of the sky as possible. Use screws or plastic tie strap fasteners to tighten it.

9. CHANGES LOG

Nr.	Date	New version No.	Comments
1	100323	1.0	First release
2	100514	1.1	Minor changes applied and screenshots updated
3	100826	1.2	Accessories description added