# Radar Distance / Level Sensor

## IOT-S510RDL

User Guide

# Contents

1. Product Introduction ..... 5
1.1 Overview ..... 5
1.2 Features ..... 5
2. Hardware Introduction ..... 6
2.1 Packing List ..... 6
2.2 Hardware Overview ..... 6
2.3 Dimensions (mm) ..... 7
2.4 LED Indicator Descriptions ..... 8
3. Accessories Installation ..... 8
3.1 Battery Installation ..... 8
3.2 SIM Card Installation (Cellular Version Only) ..... 8
3.3 Waterproof Cover Fixed ..... 9
3.4 Antenna Installation (External Antenna Version Only) ..... 9
4. Operation Guide ..... 10
4.1 NFC & Bluetooth Configuration ..... 10
4.2 General Settings ..... 11
4.3 Communication Settings ..... 13
4.3.1 LoRaWAN® Settings (LoRaWAN® Version Only) ..... 13
4.3.2 Cellular Settings (Cellular Version Only) ..... 15
4.3.3 Application Mode Settings (Cellular Version Only) ..... 16
4.4 Advanced Settings ..... 18
4.4.1 Calibration Settings ..... 18
4.4.2 Threshold Settings ..... 21
4.4.3 Data Storage ..... 22
4.4.4 Data Retransmission ..... 24
4.5 Maintenance ..... 26
4.5.1 Upgrade ..... 26
4.5.2 Backup ..... 26
4.5.3 Reset to Factory Default ..... 29
5. Installation ..... 30
5.1 Mounting Bracket Installation ..... 30
5.2 Tank Installation ..... 33
6. Communication Protocol ..... 34
6.1 LoRaWAN® Version ..... 34
6.1.1 Basic Information ..... 34
6.1.2 Sensor Data ..... 35
6.1.3 Downlink Commands ..... 37
6.1.4 Historical Data Enquiry ..... 40
6.2 Cellular Version ..... 42
6.2.1 AWS/MQTT Topics ..... 42
6.2.2 Uplink Data ..... 42
6.2.3 Downlink Commands ..... 45

# 1. Product Introduction

## 1.1 Overview

S510RDL is a non-contact Radar Distance/Level Sensor that adopts Millimeter Wave Radar technology. By using millimeter-wave signals at higher frequencies, it provides more stable performance over longer distances, and is less affected by environmental conditions. It can detect the distance between the sensor and liquid of various types, unaffected by temperature,dust , condensate etc. With IP68 waterproof and sealed enclosure, it can withstand the worst environment, while maintaining the measurement accuracy, and does not require routine maintenance.

Linovision offers LoRaWAN® version and Cellular version to meet different communication needs. The LoRaWAN® version can be integrated with Linovision LoRaWAN® gateway and Linovision Development Platform, enabling remote and visual management of all sensor data. The Cellular version supports multiple application modes to be compatible with IoT platforms.

S510RDL can used in sewers, rivers, impounding reservoir, storage tanks and other locations that require to measure distance and level.

## 1.2 Features

- 8° Radar beam angle can be focused on the target fluid, enabling accurate measurement of liquid level
- Wide measuring range of 0.3m to 12m with small blind zone
- Not affected by dust, condensate, temperature, acoustic noise, etc
- Non- invasive liquid level monitoring, can detect hazardous or non-hazardous liquids
- External antenna or internal antenna versions are optional for various applications
- Built-in 3-axis accelerometer sensor to monitor device tilt status
- Support to check radar-echo curve and one-click diagnostic to calibrate the distance, ensuring the accurate measurement under different environments
- Support blind zone alarm when the ranging results are within the blind zone
- Adopt PVDF material, offering excellent corrosion resistance, wear resistance and compressive strength for harsh environments
- IP68 waterproof design, resistant in fresh water to a maximum depth of 1m for up to 48 hours
- Thread design for common tank installation without extra accessories needed
- Store up to 4,000 historical records locally and support retransmission to prevent data loss
- Easy configuration via NFC and Bluetooth

- Support management and OTA upgrade via Linovision Development Platform
- Function well with standard LoRaWAN® gateways and network servers (LoRaWAN® Version Only)
- Support multiple network protocols to be compatible with IoT platforms (Cellular Version Only)

# 2. Hardware Introduction

## 2.1 Packing List

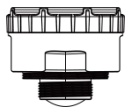

1 ×
S510RDL Sensor

1×
Mounting Bracket

1 ×
Bubble Level

1 ×
Waterproof Tape

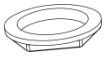

1 × G1$^1/_2$ Nut

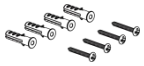

4 × Wall Mount
Screw Kits

1 ×
O-ring Seal

1 × ER34615
Li-SoCl$_2$ Battery

1 × SMB Magnetic Antenna
with Screw Kits
(External Antenna Version
Only)

1 ×Antenna Cable
Gland (External
Antenna Version Only)

1 ×
Warranty Card

1 ×
Quick Guide

**If any of the above items is missing or damaged, please contact your sales representative.**

## 2.2 Hardware Overview

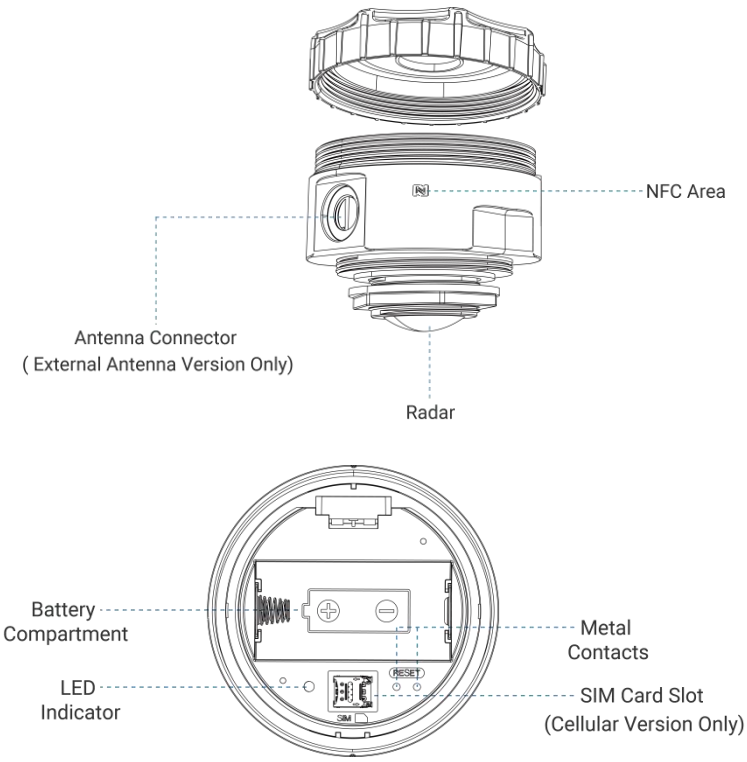


## 2.3 Dimensions (mm)

### Internal Antenna Version:

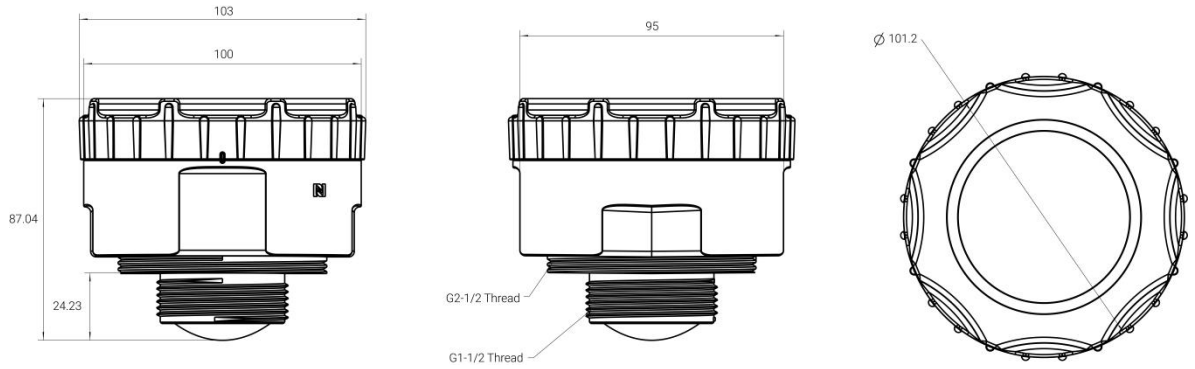


### External Antenna Version:

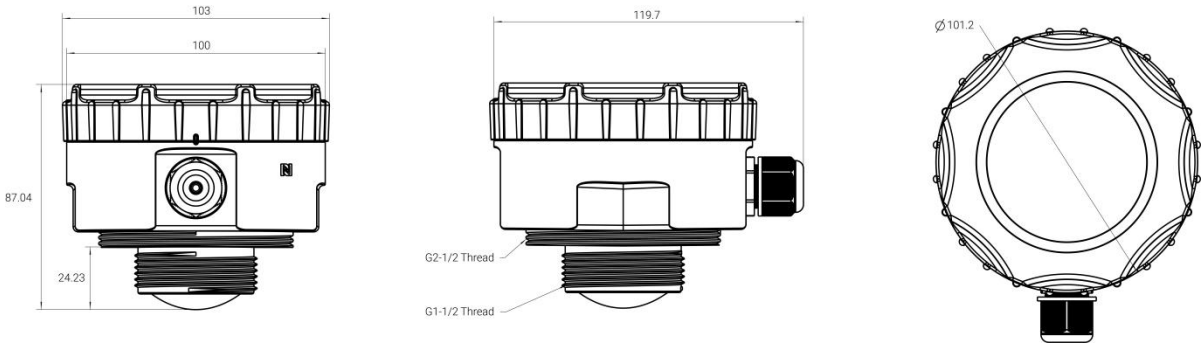

## 2.4 LED Indicator Descriptions

| Function | Action | LED Indication |
|---|---|---|
| Power On | Install the New Battery | Lights up for 3s |
| Power Off | Remove Battery | Turns off |
| Reboot | Create short circuit with the two metal contacts for over 3s | Blinks Slowly |
| Reset to Factory Default | Create short circuit with the two metal contacts for over 10s | Blinks Quickly |
| Check On/Off Status | Create short circuit with the two metal contacts within 3s | Light On: Device is on<br>Light Off: Device is off |

# 3. Accessories Installation

## 3.1 Battery Installation

Unscrew the top cover counterclockwise, install the batteries according the following picture, the device will turn on automatically and the LED indicator will turn on for 3s.

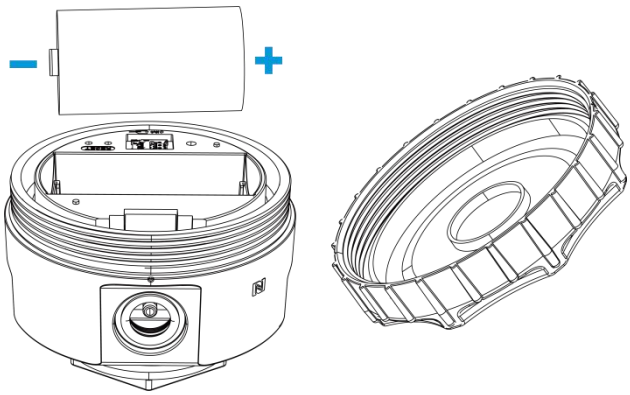


**Note:**

- The device can only be powered by ER34615 Li-$SoCl_2$ battery. The alkaline battery is not supported.
- The battery should be removed from the device if it is not used for an expended period.

## 3.2 SIM Card Installation (Cellular Version Only)

Remove the slot cover, insert SIM card (3FF), and then replace slot cover back.

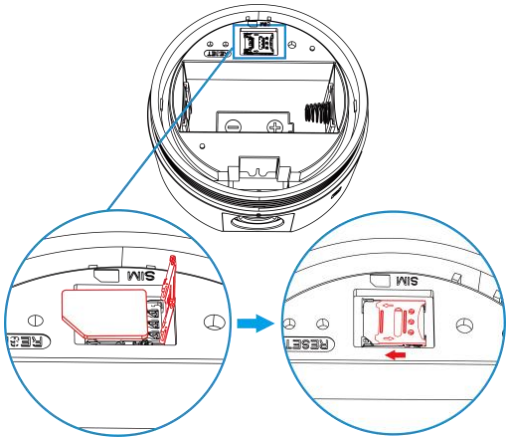


## 3.3 Waterproof Cover Fixed

Attach the waterproof cover to the device with aligning the two red dots as shown in the diagram, and press waterproof cover firmly with your hand.

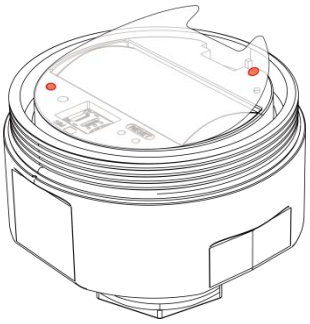

Screw the top cover clockwise until the edge marks are aligned.

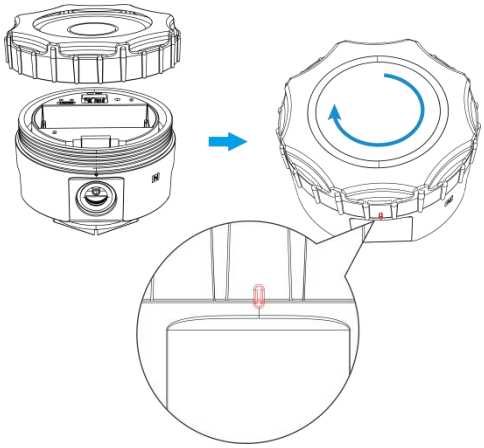

## 3.4 Antenna Installation (External Antenna Version Only)

Install the waterproof connector as shown in the diagram:

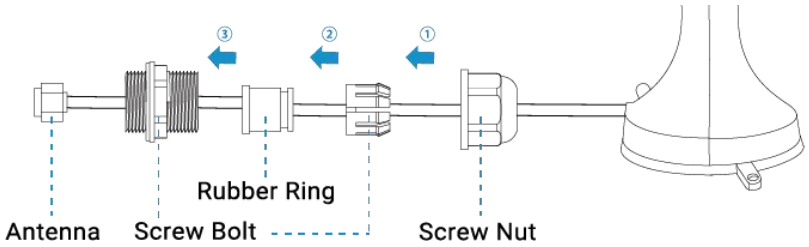


And then connect the antenna to antenna connector of the device and use an adjustable wrench to tighten the waterproof connector.

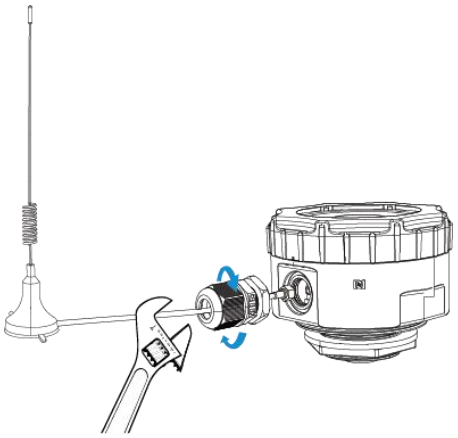

# 4. Operation Guide

## 4.1 NFC & Bluetooth Configuration

After the device is powered on, it can be configured via Bluetooth or NFC. Bluetooth is recommended for the first time installation.

**Bluetooth Configuration:**

1. Download and install “ToolBox” App on an Bluetooth-supported smart phone.
2. Enable Bluetooth and location function on the smart phone.
3. Open “ToolBox” App, select Bluetooth method and search for the target device toconnect, and then enter the Bluetooth password to read/write the device until App shows a successful prompt. It’s suggested to configure a device password for security. (Default password: 123456)

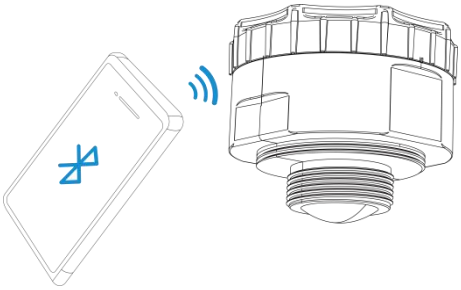

**Note:**

1) The Bluetooth connection will be terminated if there’s no data interaction within 3 minutes. It

will request to connect again.

2) The device can connect to only one phone via Bluetooth. For example, if the device is connected to smart phone A via Bluetooth, the connection will be terminated after it is connected to smartphone B.

**NFC Configuration:**

1. Download and install “ToolBox” App on an NFC-supported smart phone.
2. Enable NFC on the smartphone and open “ToolBox” App.
3. Open “ToolBox” App, attach the smartphone with NFC area to read/write the device

until App shows a successful prompt. It’s suggested to configure a device password for security. (Default password: 123456)

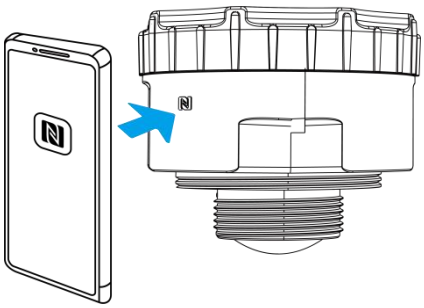

4. Basic information and settings of devices will be shown on ToolBox if it’s recognized successfully.

**Note:**

1) Ensure the location of smartphone NFC area and it’s recommended to take off phone case.

2) If the smartphone fails to read/write configurations via NFC, keep the phone away and back to try again.

## 4.2 General Settings

Go to **Device > Setting > General** of ToolBox App to change the reporting interval, etc.

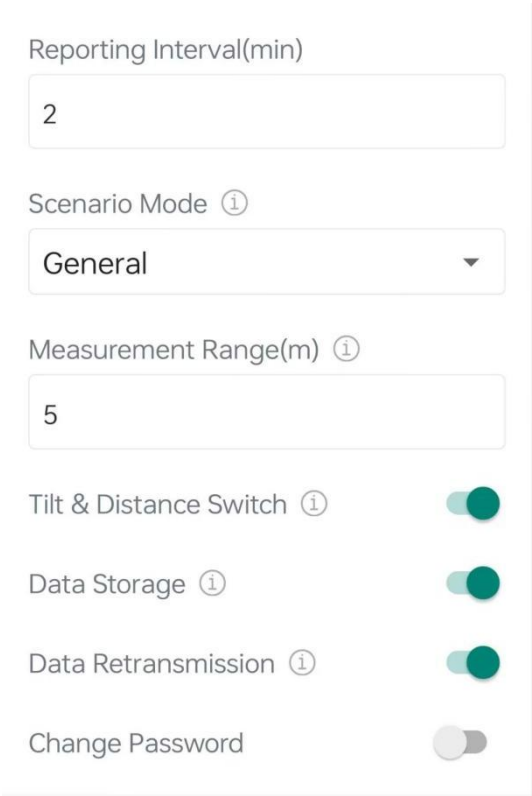


| Parameters | Description |
|---|---|
| Reporting Interval | Reporting interval of transmitting data to server.<br>Default: 1440 minutes, range: 1~1440 minutes. |
| Scenario Mode | Select from Standard Mode, Rainwater Well or Wastewater Well.<br>**General:** Suitable for calm liquid surfaces<br>**Rainwater Well:** Suitable for rainwater well<br>**Wastewater Well:** Suitable for wastewater well |
| Measurement Range(m) | The maximum distance between target surfaces and device. |
| Tilt & Distance Switch | When detecting that the offset angle is greater than 15 degrees, turn off the distance measuring function. |
| Data Storage | Disable or enable data storage locally. |
| Data Retransmission | Enable or disable data retransmission. |
| Change Password | Change the password for ToolBox App to access this device. |

## 4.3 Communication Settings

### 4.3.1 LoRaWAN® Settings (LoRaWAN® Version Only)

Go to **Device > Setting > Network** of ToolBox App to configure join type, App EUI, App Key and other information. You can also keep all settings by default.

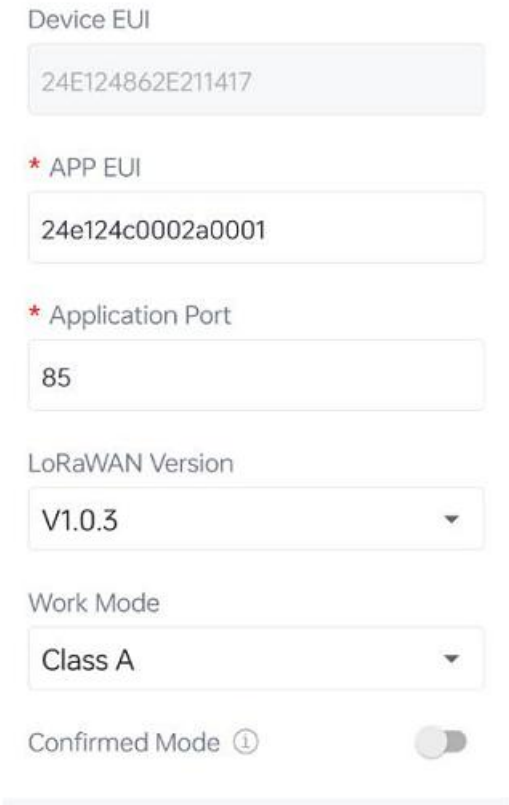


| Parameters | Description |
|---|---|
| Device EUI | Unique ID of the device which can also be found on the label. |
| App EUI | Default App EUI is 24E124C0002A0001. |
| Application Port | The port used for sending and receiving data, default port is 85. |
| LoRaWAN® Version | V1.0.2, V1.0.3 are available. |
| Work Mode | It's fixed as Class A. |
| Confirmed Mode | If the device does not receive ACK packet from network server, it will resend data once. |
| Join Type | OTAA and ABP mode are available. |
| Application Key | Appkey for OTAA mode, default is 5572404C696E6B4C6F52613230313823. |
| Rejoin Mode | Reporting interval ≤ 35 mins: the device will send a specific number of LinkCheckReq MAC packets to the network server every reporting interval or 2*reporting interval to validate connectivity; If there is no response, the device will re-join the network. |

| | |
|---|---|
| | Reporting interval > 35 mins: the device will send a specific number of LinkCheckReq MAC packets to the network server every reporting interval to validate connectivity; If there is no response, the device will re-join the network.<br>**Note:** Only OTAA mode supports rejoin mode. |
| Set the number of packets sent | When rejoin mode is enabled, set the number of LinkCheckReq packets sent.<br>**Note:** the actual sending number is **Set the number of packets sent** + 1. |
| Network Session Key | Nwkskey for ABP mode, default is 5572404C696E6B4C6F52613230313823. |
| Application Session Key | Appskey for ABP mode, default is 5572404C696E6B4C6F52613230313823. |
| Device Address | DevAddr for ABP mode, default is the 5th to 12th digits of SN. |
| Channel | Enable or disable the frequency to send uplinks.<br> 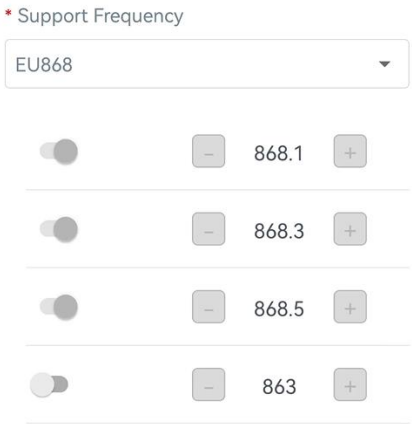 <br><br>If frequency is one of CN470/AU915/US915, enter the index of the channel that you want to enable and make them separated by commas.<br>**Examples:**<br>1, 40: Enabling Channel 1and Channel 40<br>1-40: Enabling Channel 1 to Channel 40<br>1-40, 60: Enabling Channel 1 to Channel 40 and Channel 60<br>All: Enabling all channels<br>Null: Indicates that all channels are disabled |

| | |
|---|---|
| | * Support Frequency<br>AU915<br>Enable Channel Index<br>8-15<br><br>Index / Frequency/MHz<br>0 - 15 / 915.2 - 918.2<br>16 - 31 / 918.4 - 921.4<br>32 - 47 / 921.6 - 924.6<br>48 - 63 / 924.8 - 927.8<br>64 - 71 / 915.9 - 927.1 |
| ADR Mode | Allow network server to adjust datarate of the device. |
| Spread Factor | If ADR is disabled, the device will send data via this spread factor. |
| Tx Power | Transmit power of device. |
| RX2 Data Rate | RX2 data rate to receive downlinks. |
| RX2 Frequency | RX2 frequency to receive downlinks. Unit: Hz |

**Note:**

1) Please contact Linovision sales team for device EUI list if there are many units.
2) Please contact Linovision sales team if you need random App keys before purchase.
3) Select OTAA mode if you are using Linovision Development Platform to manage devices.

### 4.3.2 Cellular Settings (Cellular Version Only)

Go to **Device > Setting > Network** of ToolBox App to configure the application mode and server information.

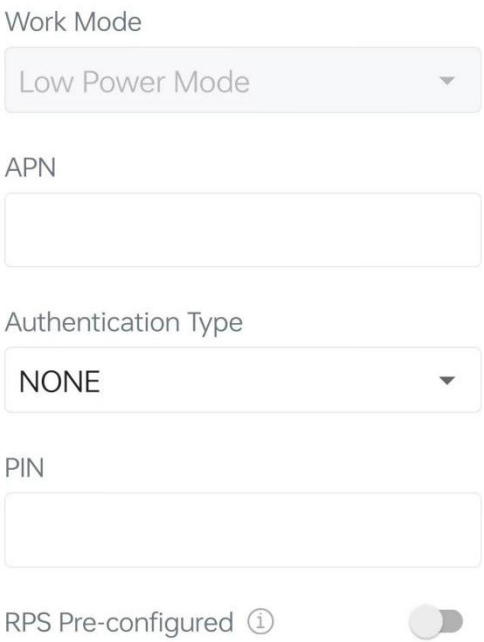


| Parameters | Description |
|---|---|
| Work Mode | **Low Power Mode:** the device will power off the cellular module to save power after sending uplinks. Only when the device sends uplinks, it can receive downlink commands. |
| APN | The Access Point Name for dialing up network connection provided by local ISP. The max length is 31 characters. |
| Authentication Type | NONE, PAP and CHAP are optional. |
| PIN | Enter a 4-8 characters PIN code to unlock the SIM. |
| RPS Pre-configured | Enable or disable request a pre-configured profile from Linovision Development Platform or other RPS server. |

### 4.3.3 Application Mode Settings (Cellular Version Only)

Go to **Device > Setting > Application Mode** of ToolBox App to configure the application mode and server information.

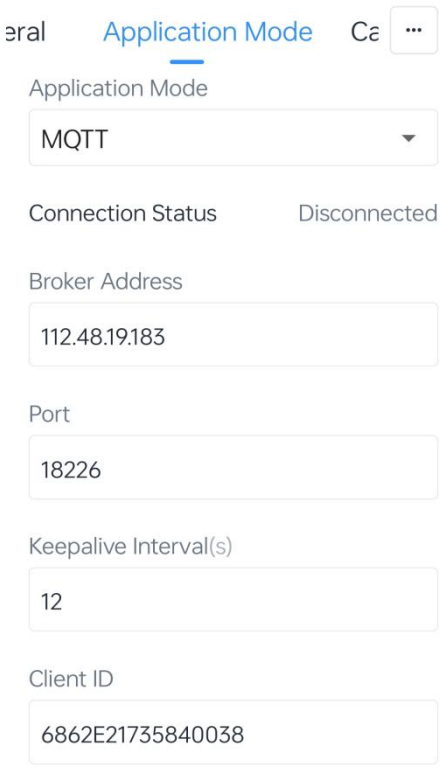


| Parameters | Description |
|---|---|
| Application Mode | Select from MQTT, TCP, AWS, UDP, and Linovision Development Platform. |
| **MQTT** | |
| Broker Address | Fill in MQTT broker address to receive data. |
| Port | Fill in MQTT broker port to receive data. |
| Client ID | Client ID is the unique identity of the client to the server, it must be unique when all clients are connected to the same server. |
| **User Credentials** | |
| Enable | Enable user credentials. |
| Username | The username used for connecting to MQTT broker. |
| Password | The password used for connecting to MQTT broker. |
| **TLS** | |
| Enable | Enable the TLS encryption in MQTT communication. |
| TLS Version | It's fixed as TLS v1.2. |
| CA File | Import the CA.crt file. |
| Client Certificate | Import the client certificate. |
| Client Key | Import the client key. |
| **MQTT Topic** | |
| Uplink Topic | Receive periodic reports, threshold alarms, etc. Default: em/[SN]/uplink |

| | |
|---|---|
| Downlink Topic | Send downlink commands. Default: em/[SN]/downlink |
| **TCP** | |
| Server Address | Fill in the TCP server address (IP/domain name). |
| Port | Fill in the TCP server port. Range: 1-65535. |
| Retry Interval | Device waits before attempting to reconnect to the TCP server after a failed connection attempt. |
| Retry Times | The number of times that a device will attempt to reconnect to the TCP server after a failed connection attempt. |
| **AWS** | |
| Server Address | Fill in the AWS server domain name which the data sends to. |
| CA File | Import the CA.crt file. |
| Client Certificate | Import the client certificate. |
| Client Key | Import the client key. |
| **UDP** | |
| Server Address | Fill in the UDP server address (IP/domain name). |
| Port | Fill in the UDP server port. Range: 1~65535. |

## 4.4 Advanced Settings

### 4.4.1 Calibration Settings

Go to **Device > Setting > Device > Calibration** to enable calibration.

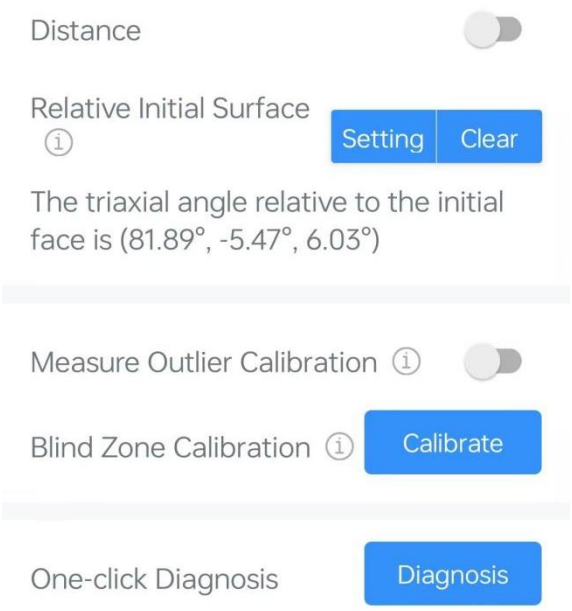


- **Numerical Calibration**: users can define calibration value to correct every distance.

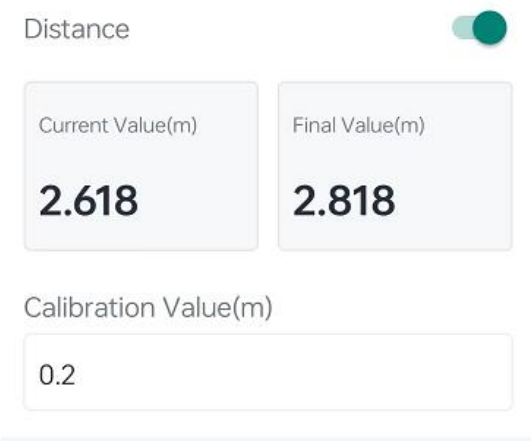


- **Relative Initial Surface:** Click **Setting** to read the triaxial angle relative to the current surface, to adjust the current device position as "Normal".

- **Measure Outlier Calibration**: users can define either outlier range or outlier value. When the device distance value exceeds the outlier range (or range) compared to the previous value, the device will measure the distance once again. Outlier Value=Max.Range*Outlier Range.

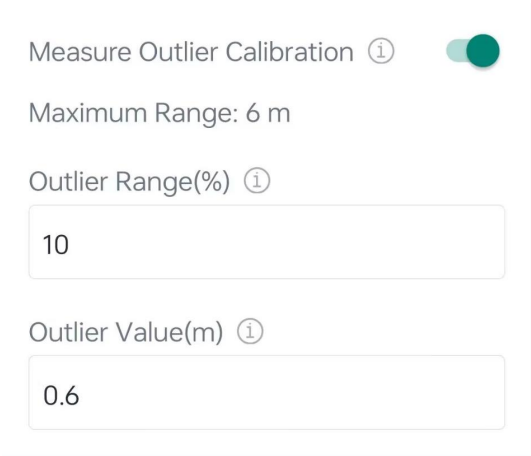


- **Blind Zone Calibration:** If calibrated, an alarm packet will be reported once if the liquid level distance falls within the blind zone. Please ensure there is not any objects within the blind zone when calibration and it is recommended to calibrate it after device installation.

- **One-click Diagnosis:** This only appears when connecting device via Bluetooth mode. When the collected distance is not consistent with the actual situation, you can use this function.

***Step 1:*** Click Diagnosis to show the current Radar Echo Curve. If the collected distance has only one value, it means the nearest signal amplitude is equal to the strongest signal. If two values appear, it means one represents the nearest signal amplitude and another represents the strongest signal.

***Step 2:*** Choose a collected distance value that is closer to the actual distance, and click Confirm to finish configuration or click Refresh to get a new collected distance.

***Step 3:*** If the distance value is still not accurate, click **Manual Diagnosis** to set the relevant parameters:

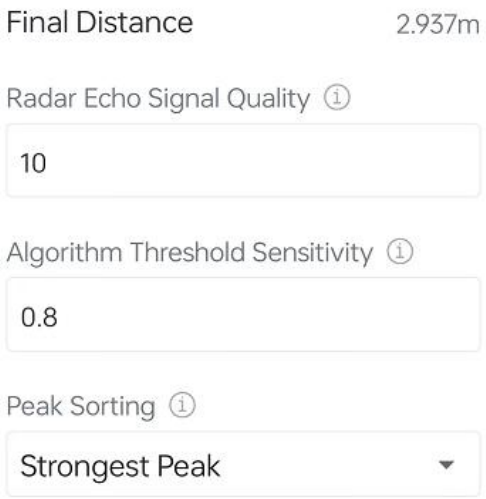


| Parameters | Description |
|---|---|
| Radar Echo Signal Quality | If the liquid level has significant foam, numerous foreign objects, or the measurement signal is unstable and the peak is not clear, adjust this value upwards.<br>**Note:** The larger the value, the greater the power consumption. |
| Algorithm Threshold Sensitivity | The device requires only one target to measure. When a large number of targets are detected, the sensitivity can be appropriately decreased; when no targets are detected, the sensitivity can be appropriately increased. |
| Peak Sorting | According to the radar echo curve and the actual scene situation, the peak with the nearest signal amplitude or the strongest peak can be selected as the effective target. |

**Note:** If appear "Disabled", reset **Relative Initial Surface** or disable **Tilt & Distance Switch**.

***Step 4:*** When adjusting parameters, click Refresh Final Distance to confirm the final distance value. Once you've obtain the desired final distance value, click the arrow on the upper left corner to return to the home page.

### 4.4.2 Threshold Settings

Go to **Device > Setting > Device > Threshold** to configure distance threshold or distance shifts threshold settings.

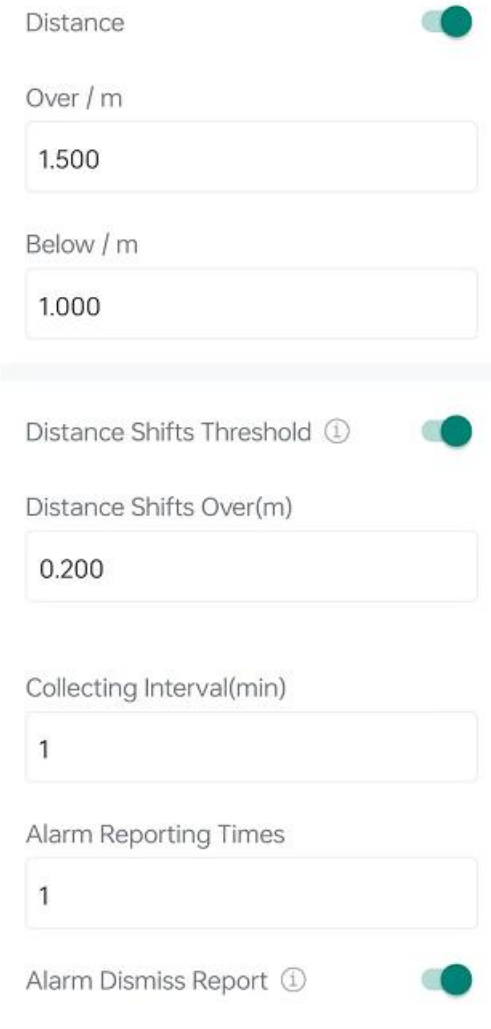


| Parameters | Description |
|---|---|
| Distance | When the distance is over or below the threshold value, the device will report alarm packets. |
| Distance Shifts Threshold | When this function is enabled, the device will report alarm packets when the absolute value of the difference between the two collected values exceeds the set threshold. |
| Collecting Interval(min) | The interval to detect distance, this should be smaller than or equal to the reporting interval. |
| Alarm Reporting Times | Set the number of alarm reports to be sent after the threshold is triggered, the default is 1. |
| Threshold Dismiss Report | When the collected distance value changes from outside the threshold to within the threshold, a threshold release packet will be reported. |

### 4.4.3 Data Storage

S510RDL sensor supports storing more than 2000 data records locally and exporting data via ToolBox App. The device will record the data according to the reporting interval even not joining to network.

Here are the steps for storage:

1. Ensure the device time is correct, go to **Device > Basic Information**, click to sync the time.

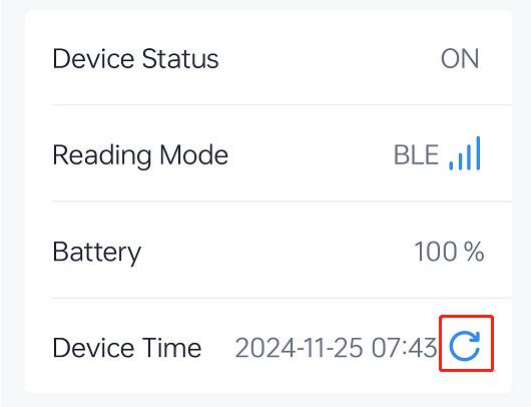


2. Go to **Device > Setting > General** to enable **Data Storage** feature.

3. Go to **Maintenance,** click **History Data**, then select the data period and click **Confirm** to export data. The maximum export data period on ToolBox App is 14 days.

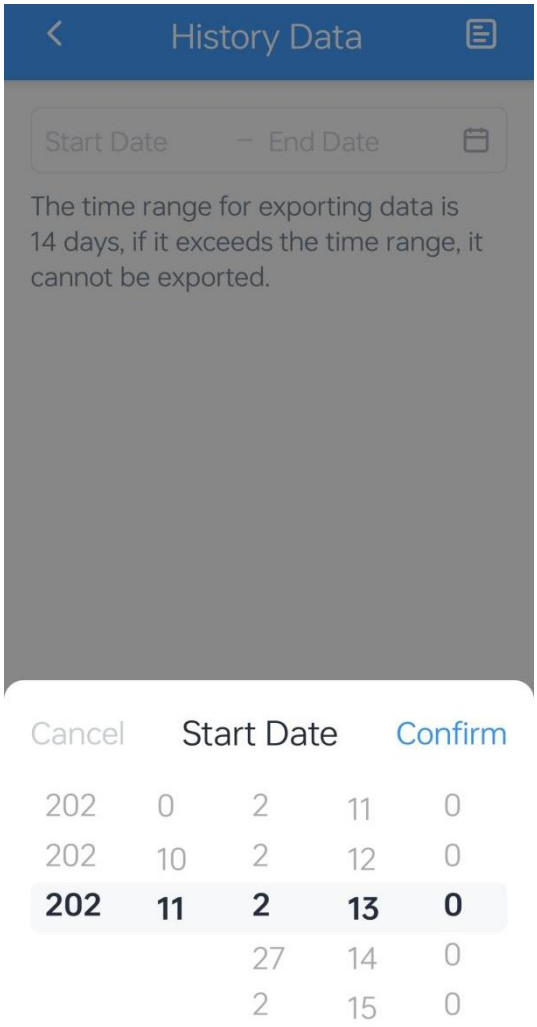


### 4.4.4 Data Retransmission

S510RDL sensor supports data retransmission to ensure the server can get all data even if the network is down for some time.

Here are the steps for retransmission:

1. Ensure the device time is correct, go to **Device > Basic Information,** please click to sync the time.

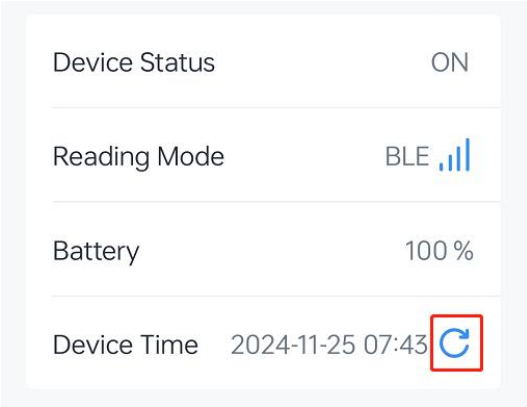


2. Go to **Device > Setting > General** to enable **Data Storage** and **Data Retransmission** feature.

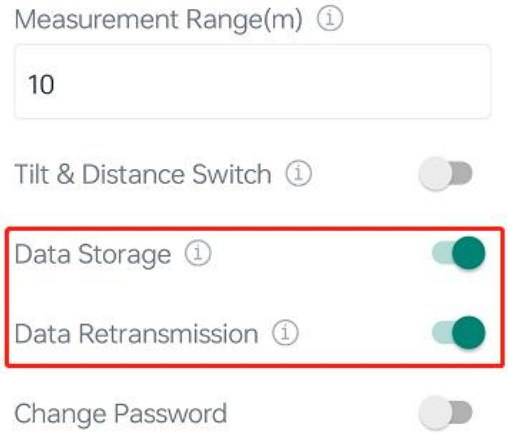


3. For LoRaWAN® Version, it is necessary to go to **Device > Setting > Network > LoRaWAN** to enable rejoin mode to ensure the device to know and record the time when it disconnects from network server. For example, the device will send LinkCheckReq MAC packets to the network server regularly to check any network disconnection; if there is no response for 32+1 times, the join status will change to de-activated and the device will record a data lost time point (the time it reconnected to the network).

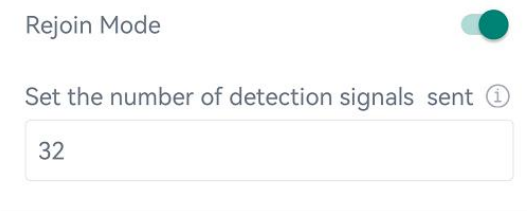


4. After the network connection is restored, the device will send the lost data from the point in time when the data was lost according to the data retransmission interval (600s by default).

**Note:**

1) If the device is rebooted or re-powered when data retransmission is not completed, the interrupted retransmission data will be retransmitted first after the network is reconnected to the network, and then the newly triggered retransmission data will be transmitted.

2) If the network is disconnected again during data retransmission, it will only send the latest disconnection data.

3) The retransmission data format is started with “20ce”, which is different from periodic reports.

4) Data retransmission will increase the uplinks and shorten the battery life.

5) For cellular version, this feature is not supported when application mode is UDP.

## 4.5 Maintenance

### 4.5.1 Upgrade

1. Download firmware from Linovision website to your smartphone.

2. Go to **Maintenance** page of ToolBox App, and tap **Upgrade** to import firmware and upgrade the device..

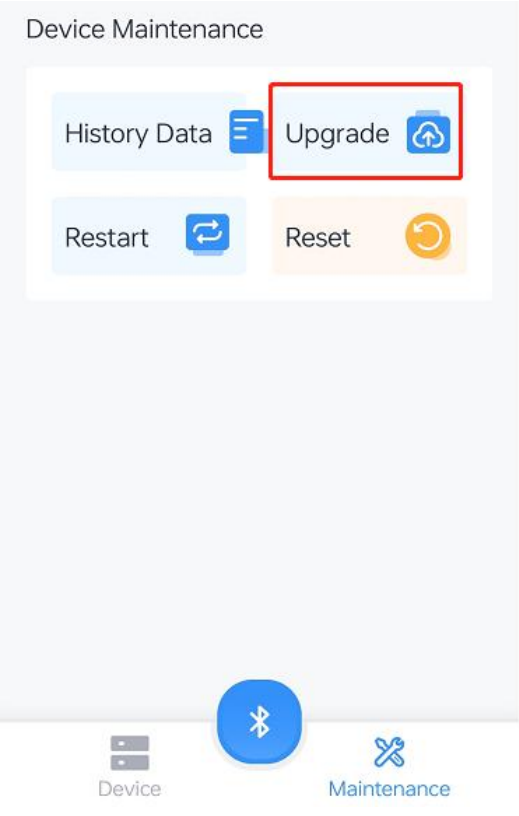


]

### 4.5.2 Backup

S510RDL supports configuration backup for easy and quick device configuration in bulk. Backup is allowed only for devices with the same model and frequency band.

1. Click to go to **Template** page in the App, click **Add Template** to save the current settings as a template. The saved templates are also editable..

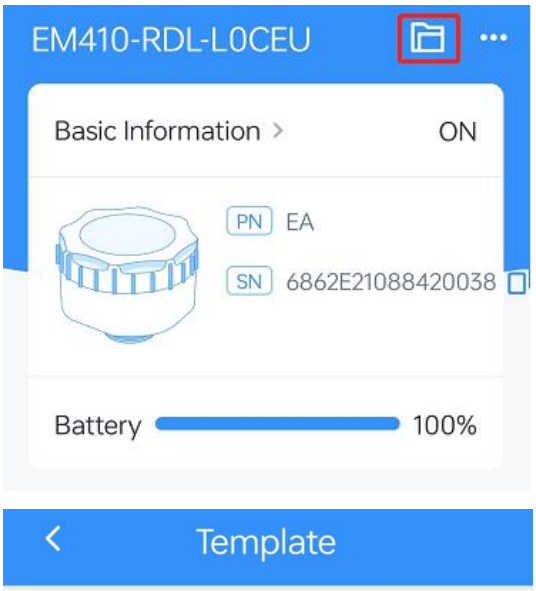


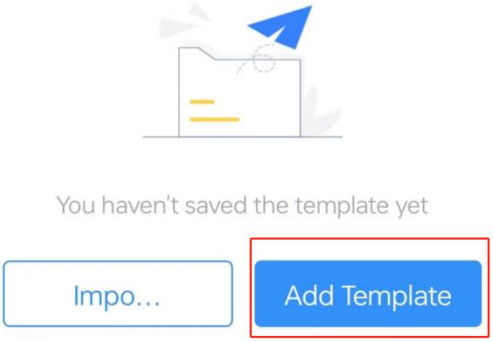


2. Modify the configuration and click to **save** it, then attach the smartphone to another device, click **Write** to reuse the template.

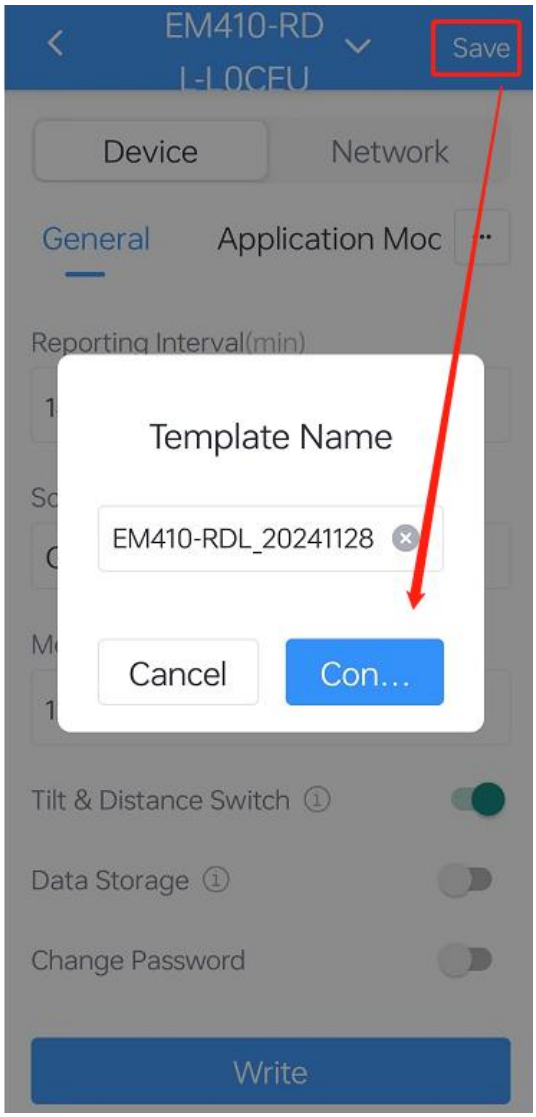


**Note:** Check the box to export or delete the template. Click the template to edit the configurations.

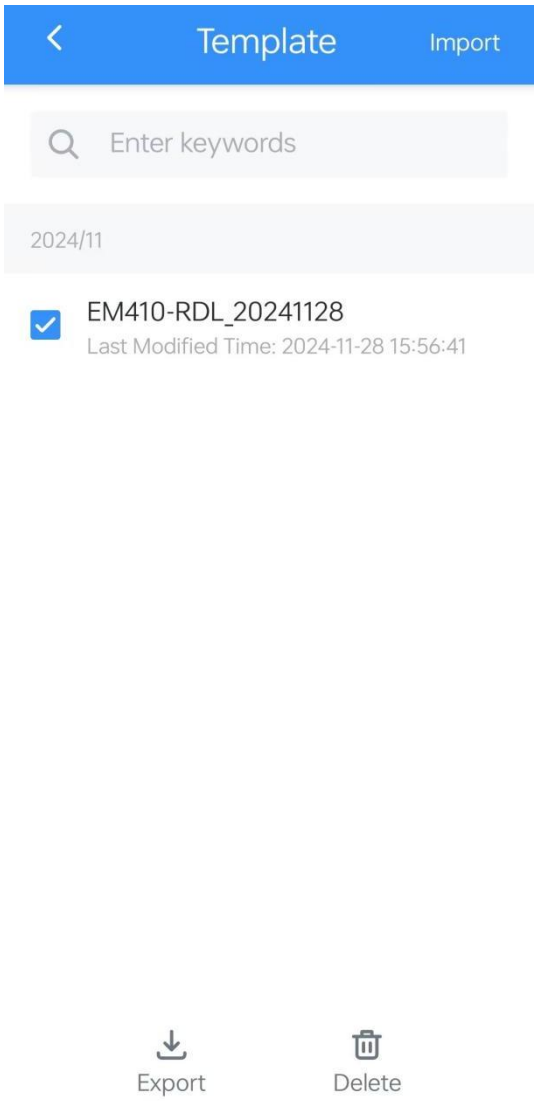


### 4.5.3 Reset to Factory Default

Go to **Maintenance** to click **Reset.**

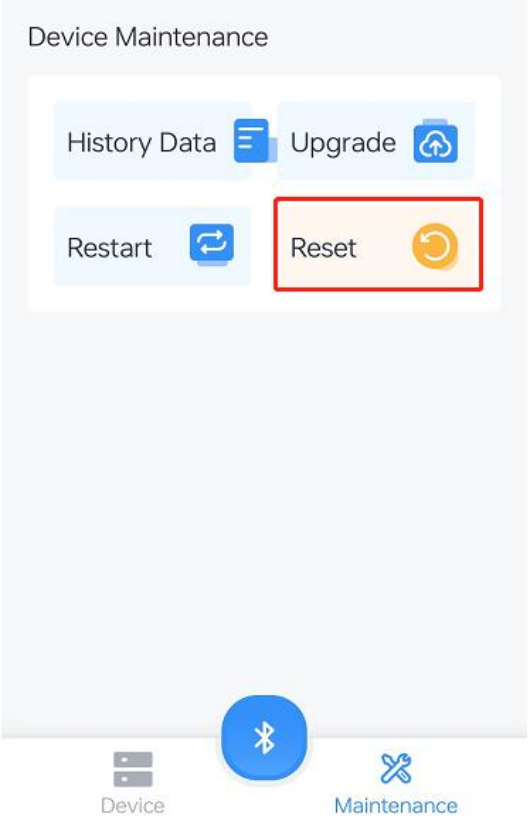


# 5. Installation

## 5.1 Mounting Bracket Installation

***Step 1:*** Locate Position

- Avoid placing the device near any metal objects, water outlets, stairs and other obstacles;
- Please consider the height of the equipment and other factors (such as the height of antenna, the thickness of the manhole cover) to ensure that the equipment does not interfere with normal usage after installation.

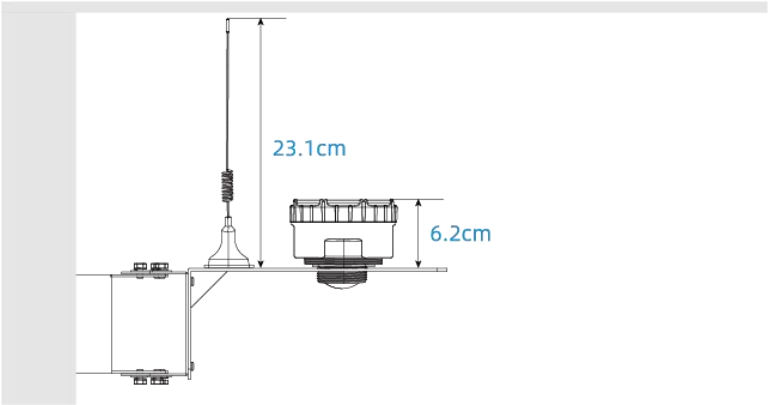


***Step 2:*** Adjust Level

Attach the bubble level to the bracket surface to ensure the bracket is parallel.

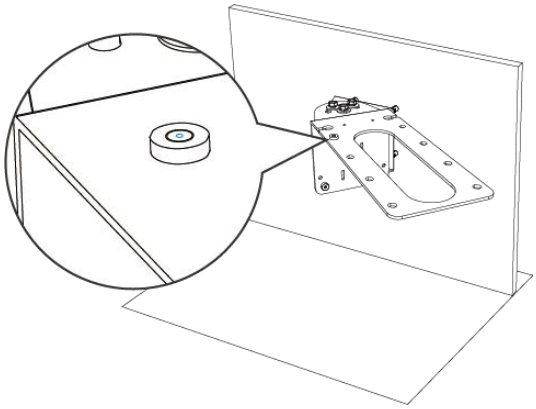

***Step 3:*** Fix Mounting Bracket

Drill 4 holes according to the mounting bracket holes. Fix the wall plugs to the wall holes, then fix the mounting bracket to the wall plugs via mounting screws.

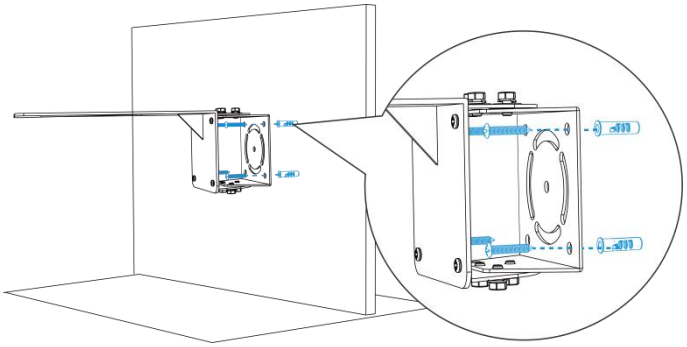

**Note:** If the wall is inclined, you can first rotate the bracket assembly 90° clockwise or counterclockwise, and then adjust the horizontal plane up or down as needed based on the actual situation.

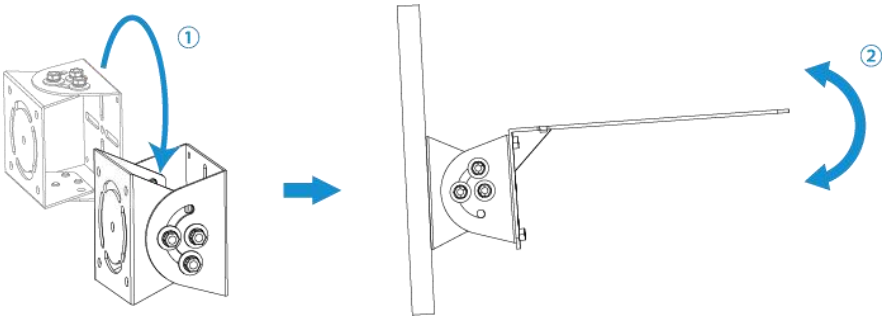


***Step 4:*** Adjust Mounting Bracket Angle

Loosen the two nuts on both the upper and lower tracks of the bracket, adjust the bracket to the appropriate angle, then use a wrench to tighten all six nuts with flat washers.

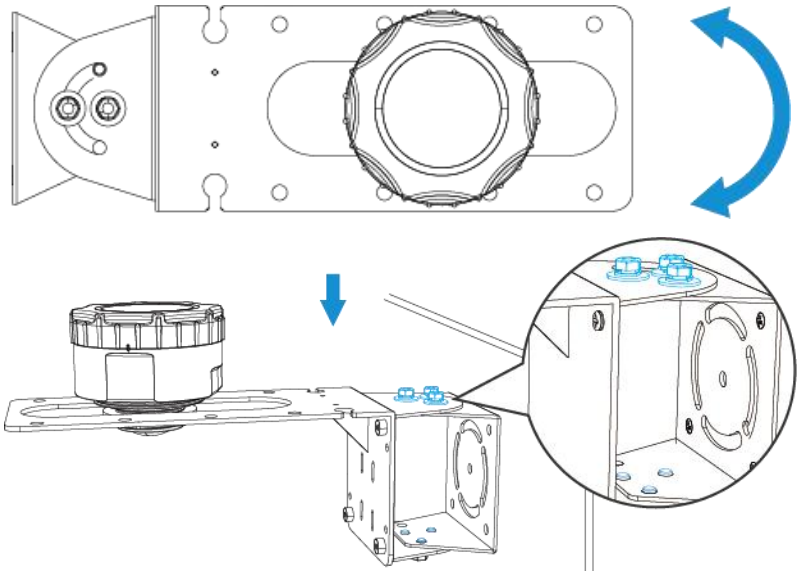

***Step 5:*** Select the device installation location on the bracket according to the installation height.

| Installation Height | Recommend Location |
|---|---|
| 1 ~ 2m | 1 |
| 2.1 ~ 3m | 2 |
| 3.1 ~ 6m | 3 |

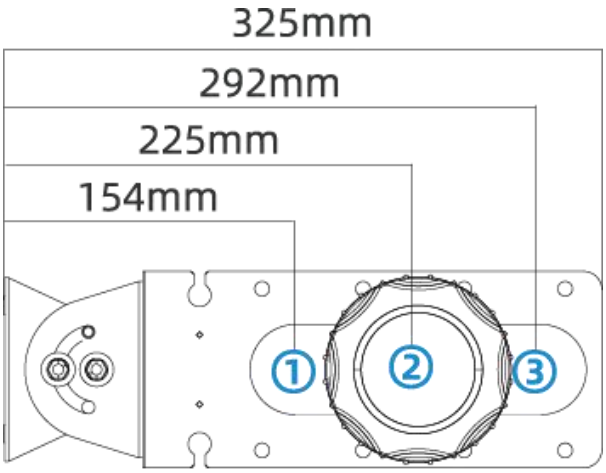


***Step 6:*** Fix Device

Place the device onto the mounting bracket, adjust it to an appropriate position, and then tighten it with G1$^{1}/_{2}$ nut. The torque for tightening the G1$^{1}/_{2}$ nut with a wrench should not exceed 4 N •m.

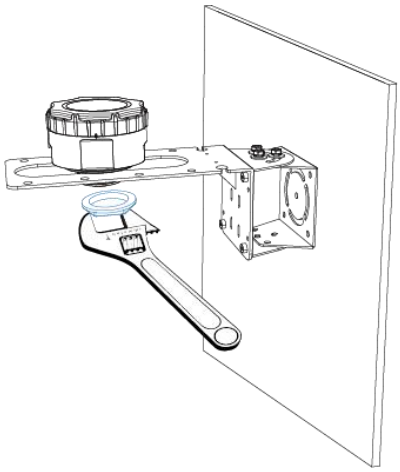

***Step 7:*** Fix Antenna (External Antenna Version Only)

The antenna can be secured to the mounting bracket with screws, or it can be fastened to the sewer wall with bolts and screws. Additionally, it can be attached to any metal surface using the magnetic base at the bottom of the antenna.

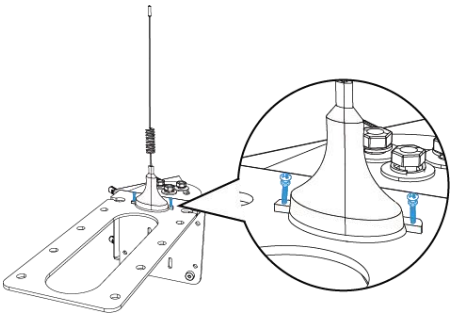

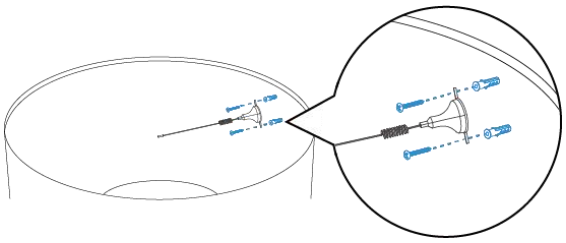

## 5.2 Tank Installation

***Step 1:*** Locate the Device Installation Position

- Place it away from the tank wall more than 20cm;
- Perpendicular to the measured liquid and with no obstacles between the device and the measured liquid.

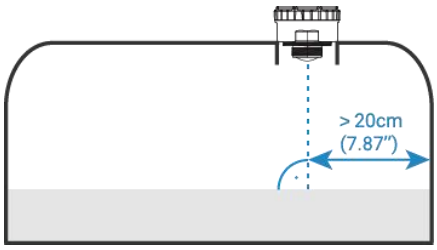


***Step 2:*** Fix Device

The device has G1 ¹/₂"and G2 ¹/₂" thread opening to allow it to be screwed into an existing applicable thread opening of a tank. An O-ring is supplied and should be used to ensure a watertight seal.

When tanks' mounting hole is unavailable or where it is undesirable to cut a mounting hole in the tank, an adapter can be installed on the top surface of the tank and the sensor can be mounted on this adapter. Adapters for different sized need to be purchased separately. The device should be threaded and screwed onto the adapter firmly to make a good seal. The O-ring shown below seals the non-invasive adapter to the bottom of the sensor's main enclosure.

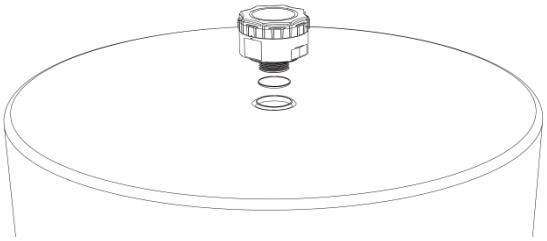

**Installation Note:**

1. The installation location of the device should avoid strong vibrations, direct sunlight, and exposure to rain or snow.
2. Do not place the device near objects that emit intense heat, strong electromagnetic fields, or radioactive materials.
3. It is recommended to attach the magnetic base of external antenna to a manhole cover or other metal surface to ensure a good signal.
4. After installation, please check the tilt status and distance measurement in the ToolBox App, and adjust the installation position, direction, or related parameters based on the results: Advanced Settings.

# 6. Communication Protocol

## 6.1 LoRaWAN® Version

All data are based on following format (HEX), the Data field should follow little-endian:

| Channel1 | Type1 | Data1 | Channel2 | Type2 | Data2 | Channel 3 | ... |
|---|---|---|---|---|---|---|---|
| 1 Byte | 1 Byte | N Bytes | 1 Byte | 1 Byte | M Bytes | 1 Byte | ... |

### 6.1.1 Basic Information

S510RDL sensor reports basic information whenever it joins the network.

| Channel | Type | Byte | Description |
|---|---|---|---|
| ff | 0b (Power On) | 1 | ff |
| | 01 (Protocol Version) | 1 | 01=>V1 |
| | fe (Reset Report) | 1 | ff |

| | | | |
|---|---|---|---|
| | 16 (Device SN) | 8 | 16 digits |
| | 09 (Hardware Version) | 2 | 01 00 => V1.0 |
| | 0a (Firmware Version) | 2 | 01 14 => V1.14 |
| | 0f (Device Type) | 1 | 00: Class A |
| | ff (TSL Version) | 2 | 0100 |

**Example:**

| ff0bff ff0101 fffeff ff166862e21141780013 ff090100 ff0a0101 ff0f00 ffff0100 | | | | | |
|---|---|---|---|---|---|
| **Channel** | **Type** | **Value** | **Channel** | **Type** | **Value** |
| ff | 0b (Power On) | ff (Reserved) | ff | 01 (Protocol Version) | 01 (V1) |
| **Channel** | **Type** | **Value** | **Channel** | **Type** | **Value** |
| ff | fe (Reset Report) | ff | ff | 16 (Device SN) | 6791d196040500 05 |
| **Channel** | **Type** | **Value** | **Channel** | **Type** | **Value** |
| ff | 09 (Hardware Version) | 0100 (V1.0) | ff | 0a (Firmware Version) | 0101 (V1.1) |
| **Channel** | **Type** | **Value** | **Channel** | **Type** | **Value** |
| ff | 0f (Device Type) | 00 (Class A) | ff | ff (TSL Version) | 0100 (V1.0) |

### 6.1.2 Sensor Data

| Channel | Type | Byte | Description |
|---|---|---|---|
| 01 | 75(Battery Level) | 1 | UINT8, Unit: %, [1-100] |
| 04 | 82(Distance) | 2 | INT16, Unit: mm |
| 05 | 00(Device Position) | 1 | 00: Normal, 01: Tilt(horizontal offset angle ≥ 15°) |
| 06 | c7(Radar Signal Strength) | 2 | INT16*0.01, Unit: dBm |
| 84 | 82(Distance) | 3 | ● Byte 1-2: Distance, INT16, Unit: mm<br>● Byte 3: 01-Alarm; 00-Alarm dismiss |
| 94 | 82(Distance Shifts Threshold) | 5 | ● Byte 1-2: Distance, INT16, Unit: mm<br>● Byte 3-4: Distance Shifts, INT16, Unit: mm<br>● Byte 5: 02 |
| b4 | 82(Blind Zone) | 3 | ● Byte 1-2: Distance, INT16, Unit: mm |

| | | | |
|---|---|---|---|
| | | | ● Byte 3:<br>➢ 00-Alarm dismiss<br>➢ 01-Alarm<br>■ No target within 30cm, report distance as fffd<br>■ Have target within 30cm, report the distance<br>➢ 02-Cannot collect the target, report distance as fffd<br>➢ 03-Sensor Abnormal, report distance as ffff |
| 20 | ce(Historical Data) | 11 | ● Byte 1-4: Unix Timestamp<br>● Byte 5-6: Distance, INT16, Unit: mm<br>● Byte 7-8: Temperature, INT16*0.1, Unit: °C<br>● Byte 9-10: Distance Mutation, INT16, Unit: mm<br>● Byte 11: Alarm Status<br>➢ Bit0: Threshold Alarm<br>➢ Bit1: Threshold Alarm Dismiss<br>➢ Bit2: Blind Zone Alarm<br>➢ Bit3: Blind Zone Alarm Dismiss<br>➢ Bit4: Distance Shifts Threshold Alarm<br>➢ Bit5: Device Position<br>➢ Bit6-7: 00 |

**Examples:**

1. Periodic packet:

| 017562 0482aa0c 06c70303 050000 | | | | | |
|---|---|---|---|---|---|
| **Channel** | **Type** | **Value** | **Channel** | **Type** | **Value** |
| 01 | 75 (Battery Level) | 62=>98% | 04 | 82 (Distance) | aa0c => 0caa =>3242 mm |
| **Channel** | **Type** | **Value** | **Channel** | **Type** | **Value** |
| 06 | c7(Radar Signal Strength) | 03 03=> 771*0.01=7.71 dBm | 05 | 00(Device Position) | 00: Normal |

2. Threshold Alarm: report when distance reaches the threshold.

| 8482 c827 01 9482 c827850c 02 | | |
|---|---|---|
| **Channel** | **Type** | **Value** |
| 84 | 82 (Distance) | Distance: c8 27 => 27 c8 =10184mm = 10.184m<br>01= Alarm |
| 94 | 82(Distance Shifts Threshold) | Distance Shifts Threshold: c8 27 => 27 c8 =10184mm = 10.184m<br>85 0c => 0c 85=3205mm = 3.205m<br>02=Alarm |

3. Blind Zone alarm packet: report when the target value reaches the blind zone.

| b482 ac00 01 | | |
|---|---|---|
| **Channel** | **Type** | **Value** |
| b4 | 82(Blind Zone) | ac 00 => 00 ac = 172mm = 0.172m<br>01=calibrated distance |

### 6.1.3 Downlink Commands

S510RDL supports downlink commands to configure the device. Application port is 85 by default.

| Channel | Type | Byte | Description |
|---|---|---|---|
| ff | 10 (Reboot) | 1 | ff (Reserved) |
| | bd(UTC Time Zone) | 2 | INT16/60 |
| | 28(Query Device Status) | 1 | 01 |
| | 8e (Reporting Interval) | 3 | ● Byte 1: 00<br>● Byte 2-3: Reporting Interval, UINT16, Unit: min, Range: 1~1440 |
| | 1b(Measurement Range) | 5 | ● Byte 1:<br>➢ 00 = General Mode;<br>➢ 01 = Rainwater Well Mode;<br>➢ 02 = Wastewater Well Mode<br>● Byte 2-3: 0000<br>● Byte 4-5: Max. Measuring Range, UINT16, Unit: mm |
| | 3e (Tilt & Distance Switch) | 1 | 01 = Enable; 00 = Disable |
| | 68(Data Storage) | 1 | 01 = Enable; 00 = Disable |
| | 69(Data Retransmission) | 1 | 01 = Enable; 00 = Disable |
| | 6a(Data Retransmission Interval) | 3 | ● Byte 1: 00 |

| | | | |
|---|---|---|---|
| | | | ● Byte 2-3: Interval time, Unit: s |
| | ab(Distance Calibration) | 3 | ● Byte 1: 01-Enable; 00-Disable<br>● Byte 2-3: Calibration Value, INT16, Unit: mm |
| | 1c(Recollecting of Measure Outlier Calibration) | 2 | ● Byte 1: Recollecting Times, UINT 8, Range: 1~3<br>● Byte 2: Recollecting Interval, UNIT 8, Unit: s, Range: 1~10 |
| | 06 (Set Threshold Alarm) | 9 | ● Byte 1:<br>➢ Bit2~Bit0:<br>000-disable<br>001-below<br>010-over<br>011-within<br>100-below or over<br>101-Distance shifts over<br>➢ Bit5~Bit3:<br>001-Distance threshold alarm;<br>010-Distance shifts threshold alarm<br>➢ Bit6: 0<br>➢ Bit7:<br>0-disable threshold dismiss report<br>1-enable threshold dismiss report<br>● Byte 2-3: Min. Value, INT16, Unit: mm<br>● Byte 4-5: Max. Value or distance shifts value, INT16, Unit: mm<br>● Byte 6-9: 00000000 |
| | f2(Alarm Reporting Times) | 2 | UINT16, Range: 1~1000, Default: 1 |
| | 27(Clear History Data) | 1 | 01 |
| | 2a(Device Calibration) | 1 | 01-Blind Zone Calibration |

| | | | |
|---|---|---|---|
| f9 | 12 (Scenario Mode) | 1 | 00 = General Mode;<br>01 = Rainwater Well Mode;<br>02 = Wastewater Well Mode |
| | 39(Collecting Interval) | 2 | Unit: min, Range: 1~1440 |
| | 14(Radar Echo Signal Quality) | 2 | INT16, Range: -10~35 |
| | 15(Algorithm Threshold Sensitivity) | 2 | INT16*0.1, Range: 0.1~1 |
| | 16(Peak Sorting) | 1 | 00-Nearest Peak; 01-Strongest Peak |

**Example:**

1. Set time zone as UTC-4.

| **ffbd10ff** | | |
|---|---|---|
| **Channel** | **Type** | **Value** |
| ff | bd | 10 ff=> ff 10 = -240/60=-4<br>the time zone is UTC-4 |

2. Set reporting interval as 4 minutes.

| **ff8e 00 0400** | | |
|---|---|---|
| **Channel** | **Type** | **Value** |
| ff | 8e (Reporting Interval) | 04 00 => 00 04 = 4 minutes |

3. Reboot the device.

| **ff10 ff** | | |
|---|---|---|
| **Channel** | **Type** | **Value** |
| ff | 10 (Reboot) | ff (Reserved) |

4. Set the device as Wastewater Well mode.

| **f912 02** | | |
|---|---|---|
| **Channel** | **Type** | **Value** |
| f9 | 12 (Scenario Mode) | 02 = Wastewater Well Mode |

5. Disable “Tilt & Distance Switch” feature.

| **ff3e 00** | | |
|---|---|---|
| **Channel** | **Type** | **Value** |
| ff | 3e (Tilt & Distance Switch) | 00 = disable |

6. When the distance is below 1m or over 10m, the sensor will send threshold alarm.

| **ff06 8c e803 1027 00000000** | | |
|---|---|---|
| **Channel** | **Type** | **Value** |

| | | |
|---|---|---|
| ff | 06 (Set Threshold Alarm) | 8c=10 001 100:<br>100=below or over<br>001=Distance threshold alarm<br>10=enable threshold dismiss report<br>Min: e8 03 => 03 e8 = 1000 mm = 1m<br>Max: 10 27 => 27 10 = 10000 mm =10m |

7. When the distance shifts is over 0.5m, the sensor will send threshold alarm.

| ff06 95 0000 f401 00000000 | | |
|---|---|---|
| **Channel** | **Type** | **Value** |
| ff | 06 (Set Threshold Alarm) | 95=10 010 101:<br>101=Distance shifts over<br>010=Distance shifts threshold alarm<br>10=enable threshold dismiss report<br>Min: 0000<br>Distance shift value: f4 01 => 01 f4 = 500 mm=0.5m |

### 6.1.4 Historical Data Enquiry

S510RDL supports sending downlink commands to enquire historical data for specified time point or within a certain time range. Before utilizing this feature, it is import to make sure the device time is correct and data storage feature was enable to store the data.

**Command format:**

| Channel | Type | Byte | Description |
|---|---|---|---|
| fd | 6b (Enquire data in time point) | 4 | unix timestamp |
| | 6c (Enquire data in time range) | 8 | ● Byte 1-4: Start time, unix timestamp<br>● Byte 5-8: End time, unix timestamp |
| | 6d (Stop query data report) | 1 | ff |
| ff | 6a(Report Interval) | 3 | ● Byte 1: 01<br>● Byte 2-3: Unit: s, Range: 30~1200s (60s by default) |

**Reply format:**

| Channel | Type | Byte | Description |
|---|---|---|---|

| | | | |
|---|---|---|---|
| fc | 6b/6c | 1 | 00: data enquiry success;<br>01: time point or time range invalid;<br>02: no data in this time or time range. |
| 20 | ce (Historical Data) | 11 | ● Byte 1-4: Unix Timestamp<br>● Byte 5-6: Distance, INT16, Unit: mm<br>● Byte 7-8: Temperature, INT16*0.1, Unit: °C<br>● Byte 9-10: Distance Shifts, INT16, Unit: mm<br>● Byte 11: Alarm Status<br>➢ Bit0: Threshold Alarm<br>➢ Bit1: Threshold Alarm Dismiss<br>➢ Bit2: Blind Zone Alarm<br>➢ Bit3: Blind Zone Alarm Dismiss<br>➢ Bit4: Distance Shifts Threshold Alarm<br>➢ Bit5: Device Position<br>➢ Bit6-7: 00 |

**Note:**

1. The device only uploads no more than 300 data records per range inquiry.
2. When enquiring about the data in time point, it will upload the data that is the closest to the search point within the reporting interval range. For example, if the device's reporting interval is 10 minutes and users send a command to search for 17:00's data, if the device finds there is data stored in 17:00, it will upload these data. If not, it will search for data between 16:50 to 17:10 and upload the data which is the closest to 17:00.

**Example:**

1. Enquire historical data between 2024/9/7 15:28:22 to 2024-9-11 15:28:22.

| **fd6c 9600dc66 9646e166** | | |
|---|---|---|
| **Channel** | **Type** | **Value** |
| fd | 6c (Enquire data in time range) | Start time: 9600dc66 => 66dc0096 = 1725694102s =2024/9/7 15:28:22<br>End time: 9646e166 => 66e14696 =1726039702 s =2024-9-11 15:28:22 |

Reply:

| fc6c00 | | |
|---|---|---|
| **Channel** | **Type** | **Value** |
| fc | 6c (Enquire data in time range) | 00: data enquiry success |

| 20ce b443e166 ac0c be00 0000 20 | | | |
|---|---|---|---|
| **Channel** | **Type** | **Time Stamp** | **Value** |
| 20 | ce (Historical Data) | b443e166 => 66e143b4 = 1726038964s = 2024-9-11 15:16:04 | Distance: ac0c => 0cac =3244mm=3.244m<br>Temperature: be00 => 00be = 190*0.1=19°C<br>Distance shifts: 0000<br>Alarm Status: 20=0010 0000=>Tilt |

## 6.2 Cellular Version

### 6.2.1 AWS/MQTT Topics

When the device is connected to AWS/MQTT server, the bi-directional communication uses different default topics. MQTT topics support to be changed as required.

| Topic | Content |
|---|---|
| em/[SN]/uplink | Receive periodic reports, threshold alarms, etc. |
| em/[SN]/downlink | Send downlink commands |

### 6.2.2 Uplink Data

All data are based on following format (HEX):

| **Start** | **ID** | **Packet Length** | **FLAG** | **TSL Version** | **Reserved** | **Software Version** | **Hardware Version** |
|---|---|---|---|---|---|---|---|
| 02 | 0101 | 2 Bytes | 00 | 0101 | 01 | 4 Bytes | 4 Bytes |
| **SN** | **IMEI** | **IMSI** | **ICCID** | **Signal** | **Data Length** | **Data1** | ... |
| 16 Bytes | 15 Bytes | 15 Bytes | 20 Bytes | 1 Byte | 2 Bytes | N Bytes | ... |

**Example:**

| |
|---|
| **02 0101 005D 00 0101 01 30313031 30313031**<br>**36373439443139303534363930303331**<br>**38363835303830363438303733353 0**<br>**34363030343332323432313331313 0**<br>**38393836303431323130323237303032383537** |

| 09 0007<br>01756404823B01 | |
|---|---|
| **Type** | **Content** |
| Start | 02 |
| ID | 0101 |
| Packet Length | 00 5d=93 bytes |
| FLAG | 00 |
| TSL Version | 0101=V1.1 |
| Reserved | 01 |
| Software Version | 30 31 30 31 => 0101=V1.1 |
| Hardware Version | 30 31 30 31 => 0101=V1.1 |
| SN | 36373439443139303534363930303331=>6749D19054690031 |
| IMEI | 38363835303830363438303733353 0 =>868508064807350 |
| IMSI | 3436303034333232343231331313 0 => 460043224213110 |
| ICCID | 3839383630343132313032323730303632383537 => 89860412102270062857 |
| Network Signal | 09=>9 asu |
| Data Length | 0007=>7 Bytes |
| Data | See details below |

Data part is based on Channel+Type+Data, the Data field should follow little-endian:

| Channel | Type | Byte | Description |
|---|---|---|---|
| 01 | 75(Battery Level) | 1 | UINT8, Unit: %, [1-100] |
| 04 | 82(Distance) | 2 | INT16, Unit: mm |
| 05 | 00(Device Position) | 1 | 00: Normal, 01: Tilt(horizontal offset angle ≥ 15°) |
| 06 | c7(Radar Signal Strength) | 2 | INT16*0.01, Unit: dBm |
| 84 | 82(Distance) | 3 | ● Byte 1-2: Distance, INT16, Unit: mm<br>● Byte 3: 01-Alarm; 00-Alarm dismiss |
| 94 | 82(Distance Shifts Threshold) | 5 | ● Byte 1-2: Distance, INT16, Unit: mm<br>● Byte 3-4: Distance Shifts, INT16, Unit: mm<br>● Byte 5: 02 |
| b4 | 82(Blind Zone) | 3 | ● Byte 1-2: Distance, INT16, Unit: mm<br>● Byte 3:<br>➢ 00-Alarm dismiss<br>➢ 01-Alarm<br>■ No target within 30cm, report |

| | | | |
|---|---|---|---|
| | | | distance as fffd<br>■ Have target within 30cm, report the distance<br>➢ 02-Cannot collect the target, report distance as fffd<br>➢ 03-Sensor Abnormal, report distance as ffff |
| 20 | ce(Historical Data) | 11 | ● Byte 1-4: Unix Timestamp<br>● Byte 5-6: Distance, INT16, Unit: mm<br>● Byte 7-8: Temperature, INT16*0.1, Unit: °C<br>● Byte 9-10: Distance Mutation, INT16, Unit: mm<br>● Byte 11: Alarm Status<br>➢ Bit0: Threshold Alarm<br>➢ Bit1: Threshold Alarm Dismiss<br>➢ Bit2: Blind Zone Alarm<br>➢ Bit3: Blind Zone Alarm Dismiss<br>➢ Bit4: Distance Shifts Threshold Alarm<br>➢ Bit5: Device Position<br>➢ Bit6-7: 00 |

**Examples:**

1. Periodic uplink:.

| 017562 0482a60c 06c7c8ff 050000 | | | | | |
|---|---|---|---|---|---|
| **Channel** | **Type** | **Value** | **Channel** | **Type** | **Value** |
| 01 | 75 (Battery) | 62 => 98% | 04 | 82 (Distance) | a60c => 0ca6 =>3238 mm |
| **Channel** | **Type** | **Value** | **Channel** | **Type** | **Value** |
| 06 | c7(Radar Signal Strength) | 03 03=> 771*0.01=7.71dBm | 05 | 00 (Device Position) | 00=Normal |

2. Threshold Alarm: report when distance reaches the threshold.

| 8482 c827 01 9482 c827850c 02 | | |
|---|---|---|
| **Channel** | **Type** | **Value** |
| 84 | 82 (Distance) | Distance: c8 27 => 27 c8 =10184mm = 10.184m<br>01= Alarm |

| | | |
|---|---|---|
| 94 | 82(Distance Shifts Threshold) | Distance Shifts Threshold: c8 27 => 27 c8 =10184mm = 10.184m<br>85 0c => 0c 85=3205mm = 3.205m<br>02=Alarm |

3. Blind Zone alarm packet: report when the target value reaches the blind zone.

| b482 ac00 01 | | |
|---|---|---|
| **Channel** | **Type** | **Value** |
| b4 | 82(Blind Zone) | ac 00 => 00 ac = 172mm = 0.172m<br>01=calibrated distance |

### 6.2.3 Downlink Commands

S510UDL supports downlink commands to configure the device. Note that it can only receive downlink commands within the 8s after sending uplink packets.

| Channel | Type | Byte | Description |
|---|---|---|---|
| ff | 10 (Reboot) | 1 | ff (Reserved) |
| | bd(UTC Time Zone) | 2 | INT16/60 |
| | 28(Query Device Status) | 1 | 01 |
| | 8e (Reporting Interval) | 3 | ● Byte 1: 00<br>● Byte 2-3: Reporting Interval, UINT16, Unit: min, Range: 1~1440 |
| | 1b(Measurement Range) | 5 | ● Byte 1:<br>➢ 00 = General Mode;<br>➢ 01 = Rainwater Well Mode;<br>➢ 02 = Wastewater Well Mode<br>● Byte 2-3: 0000<br>● Byte 4-5: Max. Measuring Range, UINT16, Unit: mm |
| | 3e (Tilt & Distance Switch) | 1 | 01 = Enable; 00 = Disable |
| | 68(Data Storage) | 1 | 01 = Enable; 00 = Disable |
| | 69(Data Retransmission) | 1 | 01 = Enable; 00 = Disable |
| | 6a(Data Retransmission Interval) | 3 | ● Byte 1: 00<br>● Byte 2-3: Interval time, Unit: s |
| | ab(Distance Calibration) | 3 | ● Byte 1: 01-Enable; 00-Disable<br>● Byte 2-3: Calibration Value, INT16, Unit: mm |
| | 1c(Recollecting of Measure Outlier | 2 | ● Byte 1: Recollecting Times, UINT 8, |

| | | | |
|---|---|---|---|
| | Calibration) | | Range: 1~3<br>● Byte 2: Recollecting Interval, UNIT 8, Unit: s, Range: 1~10 |
| | 06 (Set Threshold Alarm) | 9 | ● Byte 1:<br>➢ Bit2~Bit0:<br>000-disable<br>001-below<br>010-over<br>011-within<br>100-below or over<br>101-Distance shifts over<br>➢ Bit5~Bit3:<br>001-Distance threshold alarm;<br>010-Distance shifts threshold alarm<br>➢ Bit6: 0<br>➢ Bit7:<br>0-disable threshold dismiss report<br>1-enable threshold dismiss report<br>● Byte 2-3: Min. Value, INT16, Unit: mm<br>● Byte 4-5: Max. Value or distance shifts value, INT16, Unit: mm<br>● Byte 6-9: 00000000 |
| | f2(Alarm Reporting Times) | 2 | UINT16, Range: 1~1000, Default: 1 |
| | 27(Clear History Data) | 1 | 01 |
| | 2a(Device Calibration) | 1 | 01-Blind Zone Calibration |
| f9 | 12 (Scenario Mode) | 1 | 00 = General Mode;<br>01 = Rainwater Well Mode;<br>02 = Wastewater Well Mode |
| | 39(Collecting Interval) | 2 | Unit: min, Range: 1~1440 |
| | 14(Radar Echo Signal Quality) | 2 | INT16, Range: -10~35 |

| | | | |
|---|---|---|---|
| | 15(Algorithm Threshold Sensitivity) | 2 | INT16*0.1, Range: 0.1~1 |
| | 16(Peak Sorting) | 1 | 00-Nearest Peak; 01-Strongest Peak |

**Example:**

1. Set time zone as UTC-4.

| ffbd10ff | | |
|---|---|---|
| **Channel** | **Type** | **Value** |
| ff | bd | 10 ff => ff 10 = -240/60=-4<br>the time zone is UTC-4 |

2. Set reporting interval as 4 minutes.

| ff8e 00 0400 | | |
|---|---|---|
| **Channel** | **Type** | **Value** |
| ff | 8e (Reporting Interval) | 04 00 => 00 04 = 4 minutes |

3. Reboot the device.

| ff10 ff | | |
|---|---|---|
| **Channel** | **Type** | **Value** |
| ff | 10 (Reboot) | ff (Reserved) |

4. Set the device as Wastewater Well mode.

| f912 02 | | |
|---|---|---|
| **Channel** | **Type** | **Value** |
| f9 | 12 (Scenario Mode) | 02 = Wastewater Well Mode |

5. Disable “Tilt & Distance Switch” feature.

| ff3e 00 | | |
|---|---|---|
| **Channel** | **Type** | **Value** |
| ff | 3e (Tilt & Distance Switch) | 00 = disable |

6. When the distance is below 1m or over 10m, the sensor will send threshold alarm.

| ff06 8c e803 1027 00000000 | | |
|---|---|---|
| **Channel** | **Type** | **Value** |
| ff | 06 (Set Threshold Alarm) | 8c=10 001 100:<br>100=below or over<br>001=Distance threshold alarm<br>10=enable threshold dismiss report<br>Min: e8 03 => 03 e8 = 1000 mm<br>= 1m |

| | | |
|---|---|---|
| | | Max: 10 27 => 27 10 = 10000 mm =10m |

7. When the distance shifts is over 0.5m, the sensor will send threshold alarm.

| ff06 95 0000 f401 00000000 | | |
|---|---|---|
| **Channel** | **Type** | **Value** |
| ff | 06 (Set Threshold Alarm) | 95=10 010 101:<br>101=Distance shifts over<br>010=Distance shifts threshold alarm<br>10=enable threshold dismiss report<br>Min: 0000<br>Distance shift value: f4 01 => 01 f4 = 500 mm=0.5m |

**--------END---------**