www.elinz.com.au

WCDMA 3G GPS Tracker

User Manual

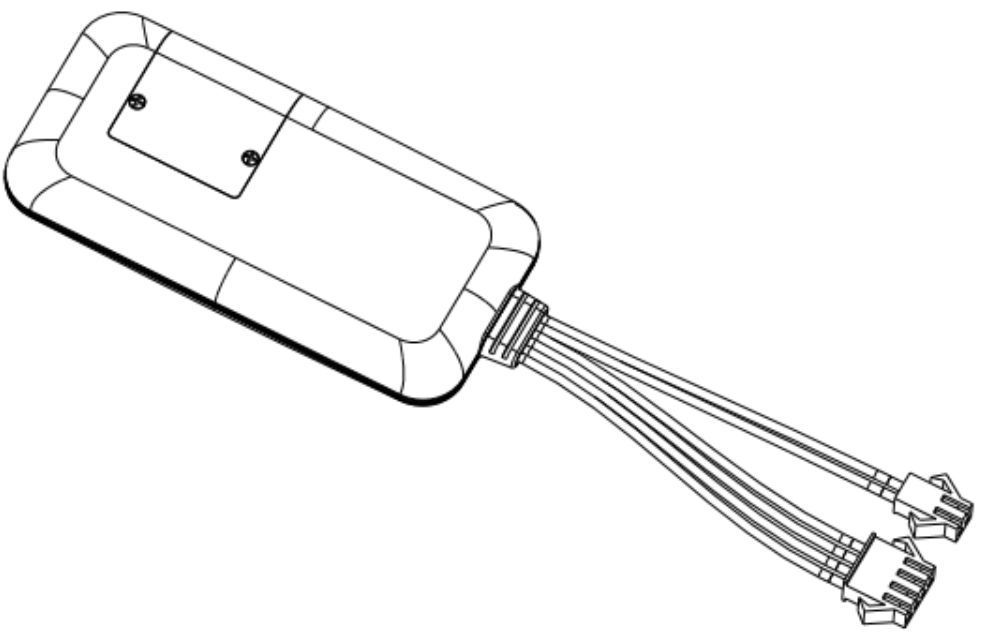

MODEL： GPSTRACKWIRE

WCDMA 3G GPS

www.elinz.com.au

To correctly install and operate the **GPSTRACKWIRE** GPS terminal, please refer to each section in this User Manual and **Operation Commands**. This user manual is for reference only. If some contents are inconsistent with those of the actual product, the latter will prevail.

The **GPSTRACKWIRE** GPS terminal uses a dedicated network to monitor and track the position of a specific host via GPS, WCDMA and GPRS.—It terminal can provide efficient vehicle management, live-monitoring, maintain transparency and security. It is widely used in the following settings: logistics distribution,

www.elinz.com.au

automobile lease, intelligent transportation, shipping market, army and police, rescuing, Safety Supervision and Intelligent city .

www.elinz.com.au

Ⅰ. Product Features

■ Supports WCDMA triple band ,GSM quad bands， universal in the world.

■ Input Voltage： 7-36V DC.

■ Located by GPS / LBS, support A-GPS

■ GPS data uploaded by WCDMA/GPRS regularly, Web browser platform, Smart phone app and SMS query.

■ ACC and vehicle status detection.

■ Built-in battery, Power disconnect alarm & Low battery alarm.

■ Built-in G-sensor ,Vibration, collision and falling alarm.

■ GEO-fence alarm, speed & shift alarm.

■ Remotely cut oil by Relay.

■ Extend I/O port for extensional functions

www.elinz.com.au

■ Multiple protocol support, OTA upgrade program.

■ Water proof level IP67

GPSTRACKWIRE GPS Terminal Specifications

Voltage	12 / 24 / 36 V DC
Work Current	<50mA@12V
Standby Current	<10mA@12V
GPS Accuracy	5-15m
LBS Accuracy	About 200m
GPS Frequency	1575MHz
GSM Frequency	850 / 900 / 1800 / 1900 MHz
WCDMA Frequency	W850 / W1900/ W2100 MHz

www.elinz.com.au

Hot/warm/cold Start	<3s， <15s， <60s
Battery Capacity	70mAh
Dimensions (mm)	87(L)X41.6(W)X 12(H)
Work Temperature	-20℃~70℃
Work Humidity	20%～80%RH
Net Weight	50 g

www.elinz.com.au

Ⅱ. Components and Accessories

2.1 Components

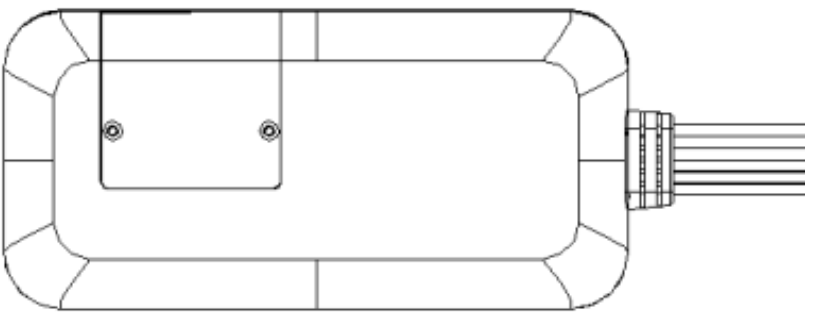

-Top Front-

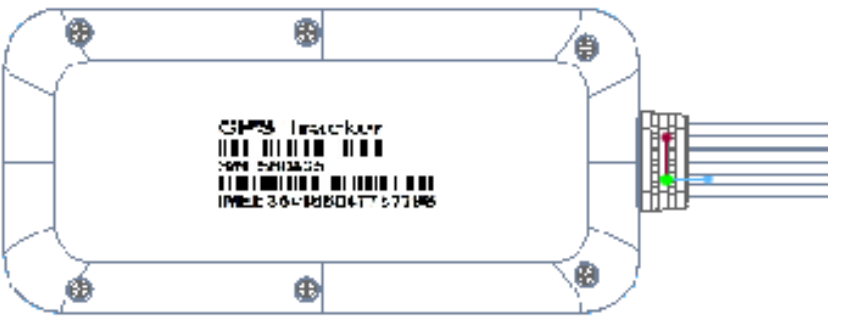

-Bottom -

Accessories （reference pictures）

www.elinz.com.au

Power Cables

Relay （Optional）

The function of the Relay is to remotely cut off/resume oil. To enable this function, please see Section 4.3 on how to connect the Relay with your vehicle.

Ⅲ. SIM card Installation

The complete the following procedures, users will need a screwdriver and a standard sized SIM card

www.elinz.com.au

(15x25 mm).

1. On the top-front of the terminal, unscrew and open the outer cover using your screwdriver.
2. Take out the waterproof silicone to uncover the SIM card slot.
3. Insert SIM card into the card slot. Please take note of the SIM card arrangement and refer to Figure 1 and 2 on page 21.

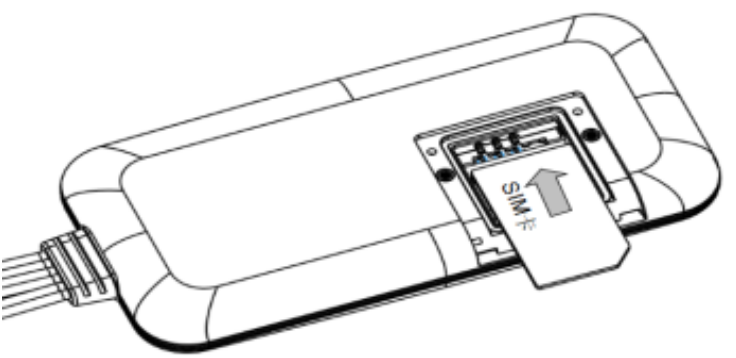

Figure 1 Carefully insert the SIM card in the inner card slot as shown.

www.elinz.com.au

Figure 2 Position the SIM card correctly in the card slot, as shown.

4. Replace the waterproof silicone and close the cover with screws.

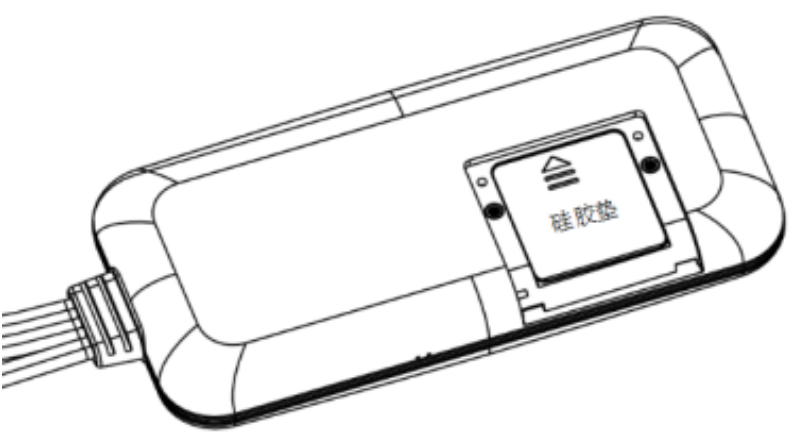

www.elinz.com.au

Figure 3 Replace the waterproof silicone.

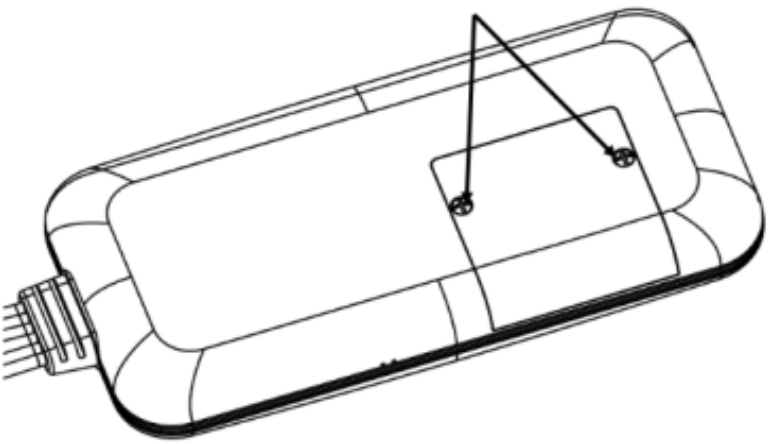

Figure 4 Tighten the screws back on the cover.

Note:

- Please cut off the power before installing or uninstalling the SIM card.

Before use, ensure that there is internet access and an active SIM card.

- SIM card should open Caller Identification function for telephone querying.

- If you enable the PIN code of the SIM card,

please use your mobile phone to disable the PIN code.

- Please make sure that the SIM card has sufficient balance.

IV. Terminal Installation

4.1 Install the terminal

4.1.1
Please install the terminal with the recommendation of a professional.

Please position the terminal with the top-front side up. Stick the bottom side of device on a flat surface with strong adhesives, cable ties or other reliable methods.

Place the terminal inside your vehicle and in a safe location to prevent interference and damage.

www.elinz.com.au

4.1.2 Installation Notice

●Keep the terminal away from RF emission sources such as backing radar, car burglar alarm and other vehicle mounted communication devices.

●The device has a built-in WCDMA antenna and GPS antenna, hence, ensure that the signal receiving side (top-front) is facing up during installation.

●During installation and usage, avoid covering the top of the terminal with metallic material, as this may weaken signal and its functionality.

The recommended location to put the terminal are:

1） Below the front windshield trim panel;

2） Around the front dash (if the surface is not made of metal);

3） Under the rear windshield;

www.elinz.com.au

4.2 Terminal wiring definition

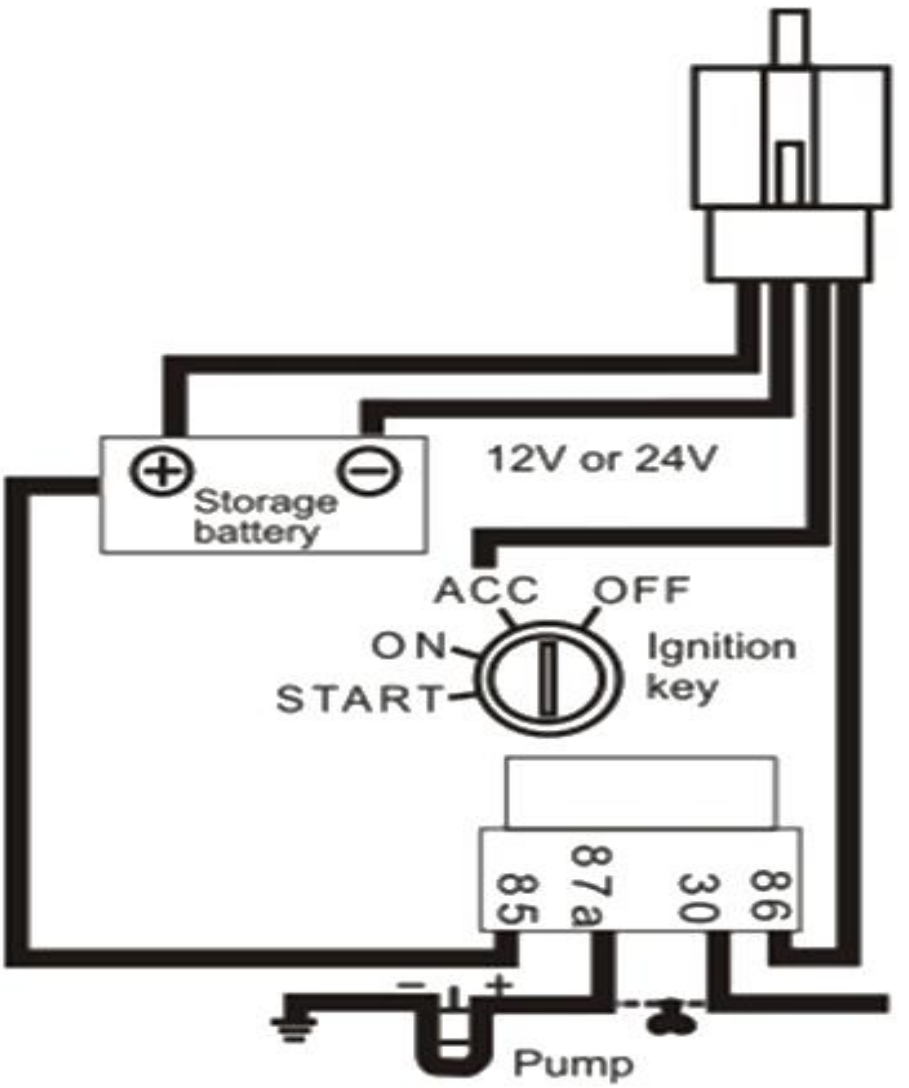

Schematic wiring terminal

www.elinz.com.au

4.2.1 Power cables and remote-control interfaces

The standard input voltage of the terminal is 7V-72VDC, so please use the original power cables provided. The terminal cables are color-coded, refer to the figure below.

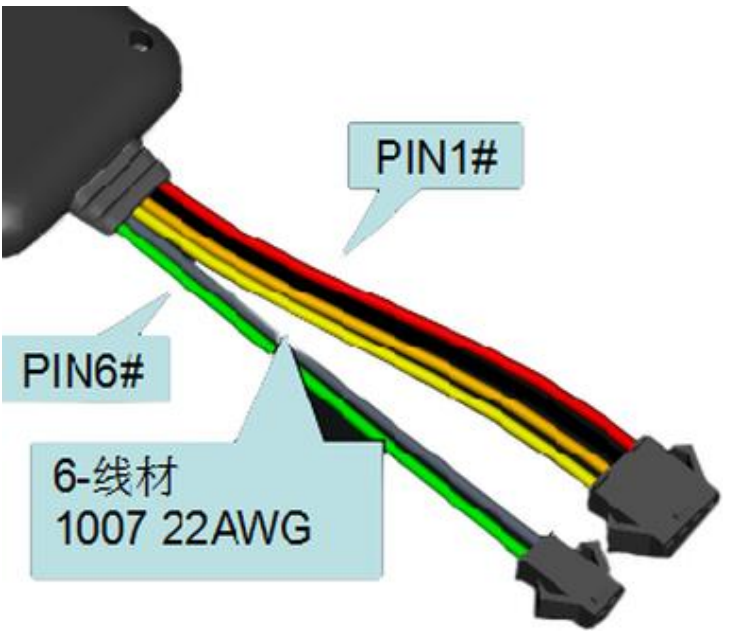

2P SM Male

5#	GPIO，灰色	
6#	GPIO，绿色	

1#	Power +，Red	
2#	Power -，Black	
3#	ACC， Orange	
4#	Relay， Yellow	

www.elinz.com.au

Figure 5 Terminal color-coded cables

The red cable is positive and the black cable is negative. Ground the positive pole separately or to the indicated ground connection.

Connect the ACC cable (orange) to the vehicle ACC switch in order for the position server to acquire the information about the vehicle power.

The ACC cable can also be connected directly to the positive pole of the vehicle power to enable live-monitoring after ignition.

Connect cable 4# (yellow) to terminal 86 (thin yellow cable) of the relay.

Caution:

- All power cables and relay attaching to the terminal must be waterproof.
- For best performance, the relay should be stable and vibration-free.

4.3 Relay wiring

The following section shows how to setup the relay to enable fuel control.

4.3.1 Connect terminal 85 (thin white cable) to the positive pole of the vehicle power (+12V/+24V). Connect terminal 86 (thin yellow cable) to cable 4# of the terminal.

4.3.2 To connect the correct fuel pump terminal:

- Cut off the positive pole of the fuel pump.
- Connect the positive pole to terminal 87a (thin green cable) of the relay.
- Connect another pole to terminal 30 (green cable), showing as in the figure.

www.elinz.com.au

Bottom of the Relay Wiring Diagram

Caution: Ensure that the operational voltage of the relay is compatible with your vehicle power output.

Ⅴ. Power On / Off

5.1 Power on

Power on: insert a valid SIM card and wire all the

cables correctly. The terminal will activate when connected to an external power supply.

5.2 LED Indicators

The terminal will indicate a red and blue LED light once activated.

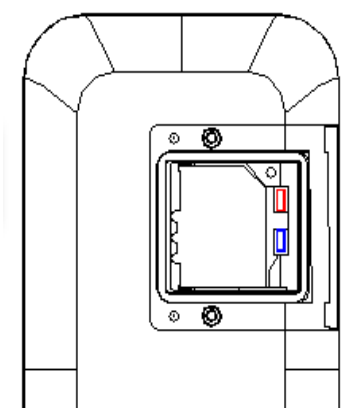

WCDMA/GSM LED

GPS LED

1. Red LED

Fast blinking	Searching for WCDMA/GSM network
Slow blinking	WCDMA/GSM has been registered and operational

2. Blue LED

Fast blinking	Searching for GPS Satellites

Slow blinking	GPS can pin-point your position and operational

5.3 Power off

To shut down the terminal, disconnect the external power supply and remove the SIM card.

VI. Inquiry/Monitoring/Cut Oil

6.1 Inquiry by service platform

6.1.1 Web Browser platform

Login the service platform and enter your ID and password to check the position of the terminal.
http://hk.sky200.com/

6.2.2 Smart phone applications

You can download an Android app (Google Play) or an IOS app (Apple) to connect with the tracker device for live-monitoring. Please check with your administrator to get installation package.

6.2 Inquiry by SMS

You can send SMS commands to the terminal in order to inquire the current status and position of the host. For the SMS commands please refer to **Operation Commands**.

6.3 Cut Oil /Restore

6.3.1 Cut off oil circuits

The position server or administrators will have the permission to cut-off fuel to the vehicle. The fuel of the vehicle will be cut off on the premise of safety, and the vehicle will not be powered on.

Ensure that the vehicle is safe before cutting off the fuel. For safety purposes, the fuel cuts off when the terminal has acquired the current GPS position, the vehicle speed is less than 20KM/h or the vehicle is static.

6.3.2 Recover oil circuits

The position server or administrators will have the

permission to recover-fuel-circuit commands to the terminal when required. The terminal will recover the fuel circuits of the vehicle once activated.

Ⅶ. Terminal Alarm

To set alarm parameters in Section 7.1, 7.3, 7.4 & 7.5, please refer to **Operation Commands**. Alarm setup must be completed when the terminal is active and it is safe to do so.

For safety purposes, when the alarm triggers, the terminal will send a warning to a service platform and an SMS message is sent to the registered mobile number.

The following section contains information of terminal alarm functions.

www.elinz.com.au

7.1 Vibration Alarm

Conditions: Alarm triggers when the vehicle vibrates excessively.

Note: You need to set vibration sensitivity and time, there is an alarm switch.

7.2 Collision Alarm

Conditions: Alarm triggers when there is a vehicle collision.

7.3 Speed Alarm

Conditions: Triggers alarm when vehicle exceeds set speed limits.

Note: You need to set the low speed limit and high speed limit.

7.4 Shift Alarm

When shift alarm is turned on, the device will send you an alarm when the car is vibrating when the engine is in off state.

7.5 Geo-fence Alarm

Conditions: Alarm triggers when the vehicle enters/ exit geo-fence.

Note: You need to set the conditions of crossing fence, fence types and so on.

7.6 Power Disconnect Alarm

Conditions: Alarm triggers when the device is disconnected from external power.

7.7 Low battery Alarm

Conditions: When the device is disconnected from external power and built-in battery power falls below a certain value.

www.elinz.com.au

Ⅷ. Terminal Setting

Please refer to the **Operation Commands.**

Ⅸ. Trouble shooting

9.1 Cannot connect platform

The terminal is never online on the position server when installed at the first time. Please check the terminal:

1） Are the power cables are wired correctly?

Pay attention to not connect them to the controlling cables of the vehicle.

2） Is the SIM card installed correctly?

Please refer to the installation instructions.

3） Check the status of the LED indicators.

If the terminal is operational, the red LED and the blue LED will intermittently blink.

4） Make inquiries on terminal parameters via SMS commands to check the current position status, accuracy and settings, etc.

9.2 Offline status

Check if the LED indicators are operational. If there are no indications, check the SIM card in following steps:

1） Call the device SIM card of the terminal to check connection ring.

2） Check if the vehicle is in the area where there is no WCDMA signal.

3） Check if terminal(s) are offline within a specific area. If all terminals are offline, you should ask the administrator for the network status.

4） Check if the SIM card has enough balance.

5） If the terminal becomes offline on the last day of the month, check the network status.

6） Make inquiries to the terminal via SMS commands to check the device status.

9.3 No positioned

If the GPS is active but the terminal cannot be connected, please check the following:

1） Is the vehicle in an area where there is no GPS signal.

2） The ‘top-front’ of the terminal is facing toward the sky.

3） The WCDMA and GPS signal is weakened if the terminal is in a place with electromagnetic wave absorption material or within metallic material. Avoid placing device near metal thermal insulation layer

or heating layer as this may weaken network connection and will sever position signal.

9.4 Position drift

Position drift will occur in places where GPS signal is poor. Please drive the vehicle to the open places.

9.5 Commands receiving abnormally

1） Check the commands format.

2） Check if the vehicle is in the places where there is WCDMA signal.

3） Check if the SIM card is properly installed.

Ⅹ. Warranty rules

10.1 Special statement

1) Technology change without notice.

2) If the color and appearance are inconsistent with those for the actual product, the latter will prevail.

www.elinz.com.au

3） Warranty card is only valid for the terminals with the following IMEI.

4） Please take care of the warranty card and show it with the original purchase receipts when enjoying the warranty service.

10.2 Warranty period

The warranty is a one-year period from the date of purchase.

10.3 After sales

Any of the following circumstances not covered by the warranty, but may be appropriate to pay repair:

1） More than the warranty period.

2） Unauthorized removal or repair damaged.

www.elinz.com.au

3） Damage caused by improper installation, use, maintenance, custody.

4） The IMEI label is torn or obscure.

5） Warranty certificate and product models do not match or warranty certificate is altered.

6） Damage caused by force majeure.

If you have further questions or clarifications feel free to contact us at **1300 881 773** or send us an email to **sales@elinz.com.au**

www.elinz.com.au

GPS Tracker

GPSTRACKWIRE

Operation Commands

VERSION： V1.5

BASED ON EELINK PROTOCOL

2015.5.23

Ⓓ

==========

1. APN Setting.....6

2. Server Setting..... 7

3. GPRS Upload Time Interval..... 8
4. Time zone setting..... 9
5. Language Setting..... 9
6. Add SOS Adminisrator number……..... 11

7. Delete SOS Administrator Number.....13
8. Add centre number ……14

9. Delete Center Number..... 15

10.Working Mode Setting.....15

11. Administrator's Call Delay 17

12. Heartbeat Packet Upload 18

13. Add Geo-fence..... 18

14. Delete Geo-fence.....22

15. Vibration Alarm Setting..... 23

16. Open Shift Alarm..... 24

17. Close Shift Alarm……24

18. Remote Upgrade……25

19. Cut off Oil / Power.....26

20. Restore Oil / Power..... 27

21. Restart..... 28

22. Restore factory settings..... 28

23. Version Inquiry 29

24. Parameter Inquiry 30

25. Status Inquiry.....31

26. Latitude&Longitude Inquiry 33

27. Edit Map URL..... 34

28. Location URL Inquiry 34

29. Address Inquiry 35

30. SMS Forwarding..... 36

Operation Commands Manual

The Operation Commands manual contains SMS syntaxes and parameters to control the GPS tracker (insert model) via a mobile messaging device.

1. All the commands are case-insensitive.

2. All the parameters in the commands can be edited and sent via a mobile device or a network. Commands must be of English symbols (One symbol length accounts for one byte).

3. Command parameters must be italic, Consolas font and separated by commas. The default syntaxes are autocorrected by the terminal.

For example, to upgrade to the latest firmware, use the following command:

UPGRADE,*C4_EXT.EXF,WWW.SKY200.COM,69#*

1. APN Setting

Input the following commands to connect your device to the APN network:

APN,*Network name,name,password#*
APN,*Network Name,Username,Password#*
Examples：

APN,*CMNET#*(*if no name & Password*)

APN,*internet,internet,internet#*

If the setup is successful, your messaging device will reply:

SET APN OK

2. Server Setting

Input the following commands and directory to connect to a server:

SERVER,*1,Domain,Port#*

SERVER,*0,IP,Port#*

Examples：

SERVER,*1,www.sky200.com,32001#*

SERVER,*0,42.120.22.24,32001#*

If the setup is successful, device will reply:

SET SERVER OK

3. GPRS Upload Time Interval

The GPRS commands are for uploading data from the terminal to a network. To set the time between each upload, input the following parameters:

TIMER,*Gathering interval,Packet number#*

Examples:

TIMER,*30#*

Means uploading data per 30s

TIMER,*15,8#*

Means gathering one packet per 15s, upload data every 15*8=120s(after gathering 8 packets)

Note:

Gather time interval: 0 or 10 ~ 18000s,
0 means forbid uploading, default is 30s.
Package number :1-20, default is 1

If the setup is successful, device will reply:

SET TIMER OK

4. Time Zone Setting

To set the time-zone, input the following commands:

GMT,*Time zone orientation,Whole Time Zone,Half Time Zone #*

Examples：

GMT,*E,8#* （*if no half time zone)*

GMT,*W,9,30#*

Note:

Parameter : E / W；0 ~ 12；0/15/30/45

If the setup is successful, device will reply:

SET GMT OK

5. Language Setting

Two language options are available which is English and Chinese. Input the following commands:

For Chinese

LANG,*1#*

For English
LANG,*0#*

If the setup is successful, device will reply:

SET LANG OK

6. Add SOS Administrator Number

There is an option to add multiply emergency number to your device. Note that the receiver of the SOS call will also be notify with alarm SMS messages.

Input the following commands to set up the SOS Adminstator number:

SOS,*A,1st number,2nd number,3rd number#*

Examples:

SOS,A,13800138000,13800138001,13800138002#

Means to set 3 numbers at a time.

SOS,A,13800138000#

Means to set 1st number.

SOS,A,,13800138001#

Means to set 2nd number.

SOS,A,,,13800138002#

Means to set 3rd number.

If the setup is successful, device will reply:

SET SOS OK

7. Delete SOS Administrator Number

To delete an emergency or SOS number linked to device, input the following commands:

SOS,*D,1st number,2nd number,3rd number# or* SOS,*D,1,2,3#*

Examples:

SOS,*D,13800138000#* Means to directly delete the number.

SOS,*D,1#*

Means to delete 1st number.

SOS,*D,3#*

Means to delete 2nd number.

SOS,*D,2,3#*

Means to delete 2nd and 3rd number.

If the setup is successful, device will reply:

DEL SOS OK

8. Add Center Number

A center number is for cutting off the power/fuel of your vehicle and can only be set by the SOS administrator.

Input the following commands to add a center number:

CENTER,*A,center number#*

Example:

CENTER,*A,13800138000#*

If the setup is successful, device will reply:

SET CENTER OK

If the setup failed, device will reply error and reason.

9. Delete Center Number

To delete a center number linked to device, input the following commands:

CENTER,*D#*

If the setup is successful, device will reply:

DEL CENTER OK

10.Working Mode Setting

There are 4 different working modes options that can be utilize to save battery power. Enter the following commands to select the working modes most suitable:

0# Tracking Mode：GPS always on；

1# Saving Mode ：GPS off when device is static, GPS on when device is moving or been inquired. (some devices type detect moving by Motion Sensor）

2# Sleeping Mode ：GPS on when device was being inquired;

3# Hibernation Mode：GPS always off;

SAVING,*0/1/2/3#*

Example：

SAVING,*1#*

If the setup is successful, device will reply:

SET SAVING OK

11. Administrator's Call Delay

To setup a call delay from an administrator's number, input the following commands:

DELAY,*time#*

Example:

DELAY,*30#*

Means get through after 30s administrator's ringing

Note: The Call from Administrator will automatically get through after a delay time . It can be used for listen. (Need Call ID display service)

Range :5-60s, default is 10s.

If the setup is successful, device will reply:

SET DELAY OK

12. Heartbeat Packet Upload

HBT,*time#*

Example:

HBT,*3#*

Note: Function see EELINK Protocol

Range :1-60min, default 3min.

If the setup is successful, device will reply:

SET HBT OK

13. Add Geo-fence

To set up alarm messages for entering or exiting geo-fence, input the following commands:

FENCE,*fence ID,fence tag,parameter1,parameter2,parameter3,parameter4#*

Example:

FENCE,*1,OR,,,500#*

Set No.1 round fence,OR alarm type: out-fence alarm; current point as the center, radius 500 m.

FENCE,*2,IR,,,500#*

Set No.2 round fence, IR alarm type: in-fence alarm; current point as the center, radius 500 m.

FENCE,*3,CR,,,500#*

Set No.3 round fence, CR alarm type: across-fence alarm; current point as the center, radius 500 m.

FENCE,*4,OR,113.5,22.5,500#*

Set No.4 round fence, OR alarm type: out-fence alarm; Latitude and longitude (113.5,22.5) as the center, radius 500 m.

FENCE,*5,IR,113.5,22.5,500#*

Set No.5 round fence, IR alarm type: in-fence alarm; Latitude and longitude (113.5,22.5) as the center, radius 500 m.

FENCE,*6,CR,113.5,22.5,500#*

Set No.6 round fence, CR alarm type: across-fence alarm; Latitude and longitude (113.5,22.5) as the center, radius 500 m.

FENCE,*1,OS,113.2,22.2,113.8,22.8#*

Set No.1 rectangular fence, OS alarm type: out-fence alarm; In longitude and latitude (113.5, 22.5), (113.8, 22.8) forming a rectangle.

FENCE,*2,IS,113.2,22.2,113.8,22.8#*

Set No.2 rectangular fence, IS alarm type: in-fence alarm; In longitude and latitude (113.5, 22.5), (113.8, 22.8) forming a rectangle.

FENCE,*3,CS,113.2,22.2,113.8,22.8#*

Set No.3 rectangular fence, CS alarm type: across-fence alarm; In longitude and latitude (113.5, 22.5), (113.8, 22.8) forming a rectangle.

14. Delete Geo-fence

To delete the geo-fence alarms, input the following command:

FENCE,*0#* *or* FENCE,*N#*

Examples:

FENCE,*0#*

Delete all fences

FENCE,*5#*

Delete 5th fence

15. Vibration Alarm Setting

To enable vibration alarm, input the following commands:

MOTION,*sensitivity*,*duration*#

Example：

MOTION,*2*,*5*#

Note:

Sensitivity Level ： 0-9 ； 1-9 is from weak to strong vibration； 0 means close Vibration alarm.

Duration time： 0-60 seconds

16. Open Shift Alarm

To enable open shift alarm, input the following command:

SHIFT,*shift range#*

Example:

SHIFT,*100#*

The given example means setting 100 meters shift alarm range. When the ignition is turned off, vehicle's 100 meters' shift will trigger the alarm.

17. Close Shift Alarm

To disable the shift alarm, input the following command:

SHIFT,*0#*

Close Shift alarm.

18. Remote Upgrade

To remotely upgrade the GPS tracker firmware, input the following commands:

UPGRADE,*upgrade package, domain name / IP, port #*

Example：

UPGRADE,*C4_EXT.exf,www.sky200.com,69#*

If the update is successful, you will receive a notification:

Firmware package：C4_EXT.exf

Domain：www.sky200.com

Port：69

19. Cut off fuel/Power

To enable the Relay Power/fuel cut off function, input the following command:

RELAY, *1#*

Note:

This command can only be executed when an SMS is sent from a Center Number.

The command can not be executed when GPS is not positioned or vehicle speed higher than 20km/hr.

If the setup is successful, device will reply:

RELAY ENABLE OK

Otherwise, you will be notified if the command cannot be executed.

20. Disable fuel/power cut off

To disable the Relay fuel/power cut off function, input the following command:

RELAY, *0#*

If the setup is successful, device will reply:

RELAY DISABLE OK

21. Restart

To refresh and restart the device, input the following command:

RESET#

If the setup is successful, device will reply:

RESET OK

22. Restore factory settings

To restore to a factory-state, input the following command:

FACTORY#

If the setup is successful, device will reply:

FACTORY OK

23. Version Inquiry

Any inquiry about the device version, input the following command:

VERSION#

Device Reply Example：

IMEI:354188046912460

IMSI:9460025500276617

ICCID:898602A51314F1298017

SYSTEM:M6000_V1.8.6

VERSION:MXAPP_V1.9.3

BUILD:MAY 21 2015 11:08:43

24. Parameter Inquiry

For any parameter inquiry, input the following command:

PARAM#

Device Reply Example：

IMEI:354188046912460

APN:CMNET

IP:WWW.SKY200.COM:32001

TIMER:30,1

CENTER:

SOS:15816316808,,

LANG:CN

GMT:E8.00

SAVING:1

25. Status Inquiry

For any status inquiry, input the following command:

STATUS#

BATTERY: XX% (Built-in Battery Percent)

GPRS: CLOSED (No Network)

FAILED (Connecting Network or Failure)

SUCCESS (Connected to Network）

GSM: NONE (No GSM Signal)

HIGH / MED / LOW (Signal Strength)

GPS: CLOSED (GPS Module Closed)

FIXED,N (Positioned and satellite number)

UNFIX,0 (Not Positioned yet)

ACC: ON / OFF (ACC on or off)

RELAY: ON / OFF (Relay on or off)

POWER: OK / NC (Power Connected or Break)

MS: LIS3DH (Motion Sensor type or No display if device don't have that component)

Device Reply Example：

BATTERY:100%
GPRS:SUCCESS
GSM:HIGH
GPS:FIXED,10
ACC:OFF
RELAY:OFF
POWER:OK
MS:LIS3DH

26. Latitude & Longitude Inquiry

For any position inquiry, including latitude and longitude, input the following command:

WHERE#

Device Reply Example:

LAT:N23.02930,LON:E114.32180,COURSE:0.00,S

PEED:0.00KM/H,DATETIME:2015-05-23 14:39:11

27. Edit Map URL

To edit or change the map provider, input the directory in the following command:

EURL,*webmap url#*

Example:

EURL,*http://maps,google.com/maps?q=#*

If the setup is successful, device will reply:

SET EURL OK

28. Location URL Inquiry

For any inquiry about URL directory, input the following command:

URL#

Device Reply Example:

http://map.google.com/?q=22.557868,113.935090

<0.0km/h 0.0>

<2014-12-12 07:32:13>

IMEI:354188047752402

29. Address Inquiry

For any inquiry about the address of the current position, input the following command:

POSITION#

Device Reply Example:

3 Songpingshan Qimin Road, Nanshan, Shenzhen, Guangdong, China, 518057

Note: Language of the message received is determined by device's language setting. If the position content failed, device will reply Google Map location link instead.

30. SMS Forwarding

To forward the SMS message to a recipient, input the following commands:

FW,*forwarding number,content#*

Examples:

FW,*10086,CXYE#*

FW,*10010,CXHF#*

This command will send a SMS to the forwarding ***number*** with the ***content***. If the message arrives to the designated destination, you will receive a notification from the forwarding number within 5 minutes.

The command usually be used for check the balance of SIM card.

If you have further questions or clarifications feel free to contact us at **1300 881 773** or send us an email to **sales@elinz.com.au**

www.elinz.com.au

GPSTRACKWIRE GPS Online Application

To access the GPSTRACKWIRE GPS online, go to http://hk.sky200.com/.

If you have registered for an account, enter your email address and password to login.

- If you have registered using the Keelin IOS app, you can use the same account.

For first time activation, you must register for your unique account.

- Click on 'Register'
- Proceed to the next screen

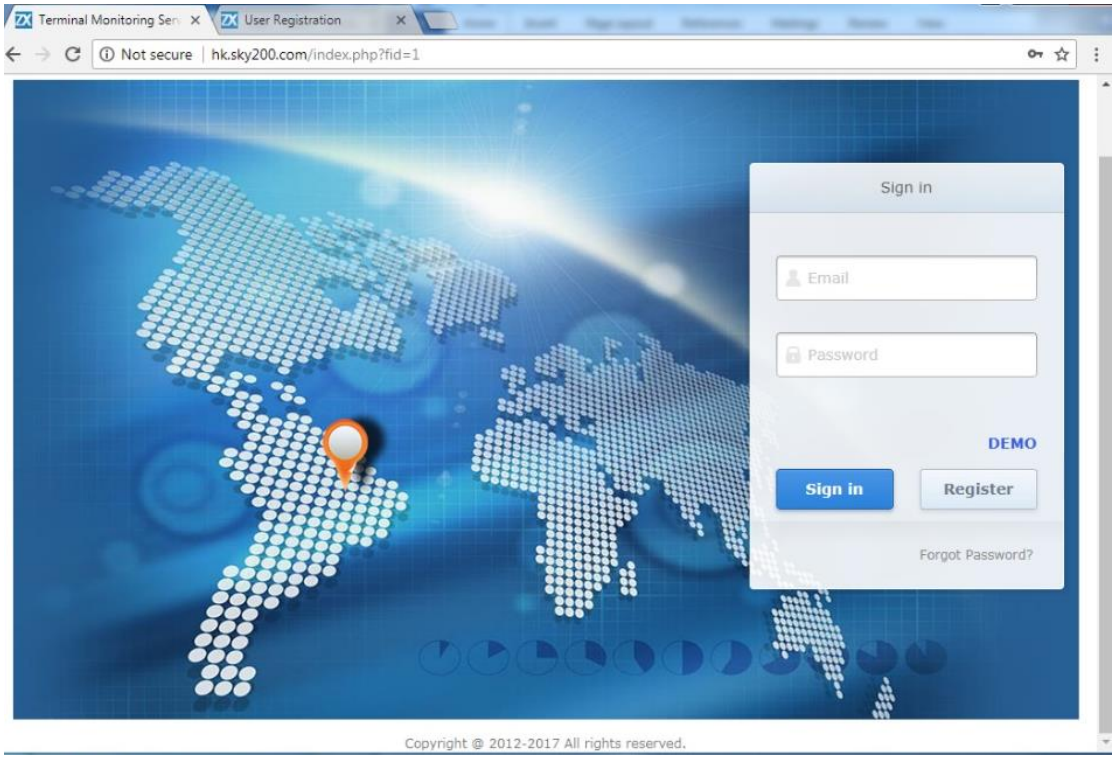

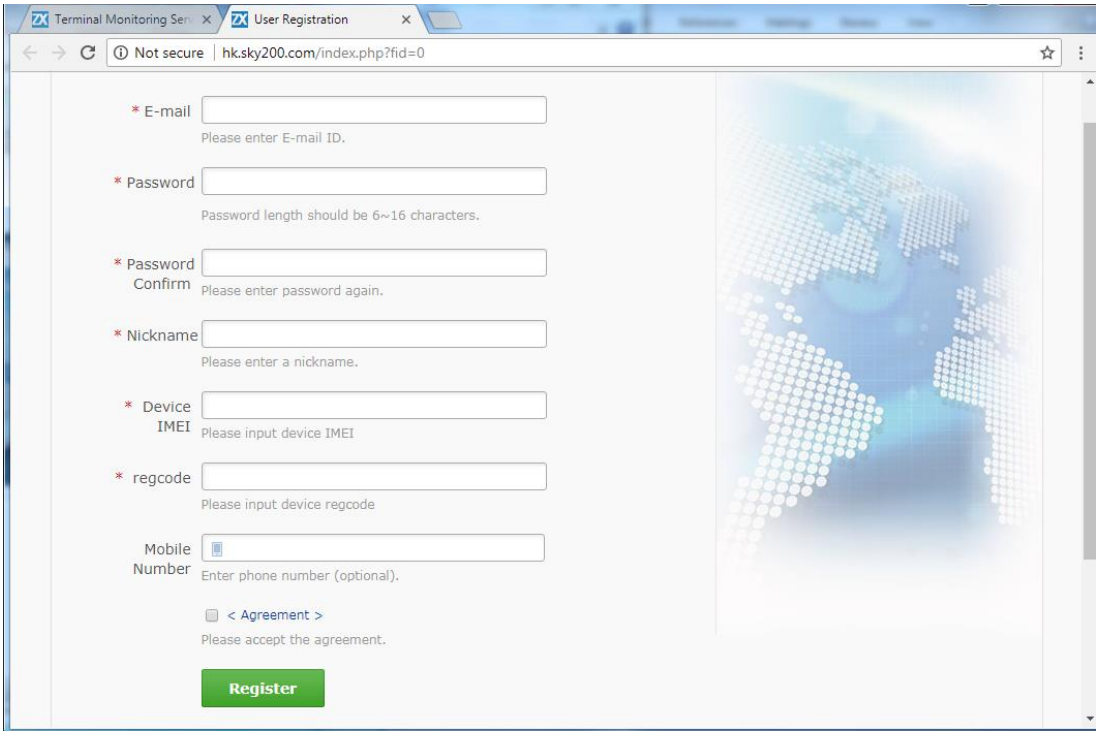

To register for an account, complete each criterion in this screen:

- Enter your email address.
  - Do note that your email address cannot be changed once registered.
- Enter your password.
  - Password length must be between 6-16 characters.
- Enter a username for your account in 'Nickname'.

Locate the IMEI number and S/N characters on the GPSTRACKWIRE GPS tracker.

- Enter the 15 digits IMEI number on this screen
- Enter device S/N (6 characters) in 'regcode'.
- Enter your mobile phone number.
- Read the 'Agreement' and place a tick to accept the terms/conditions.

Click on 'Register' to complete the account setup.

This is the 'Main Screen' once you have logged in. There are several features that you can select, see each section for reference.

- Click on 'Device Management', proceed to Section 3.1.
- Click on 'Statistics', proceed to Section 3.2.
- Click on 'Account Information', proceed to Section 3.3.
- Click on 'Monitor and Trace', proceed to Section 3.4.

- Click on 'Online Tracking', to return to the Main Screen.
  - This also provides the current tracking position.
- Other features on this screen are self-explanatory.

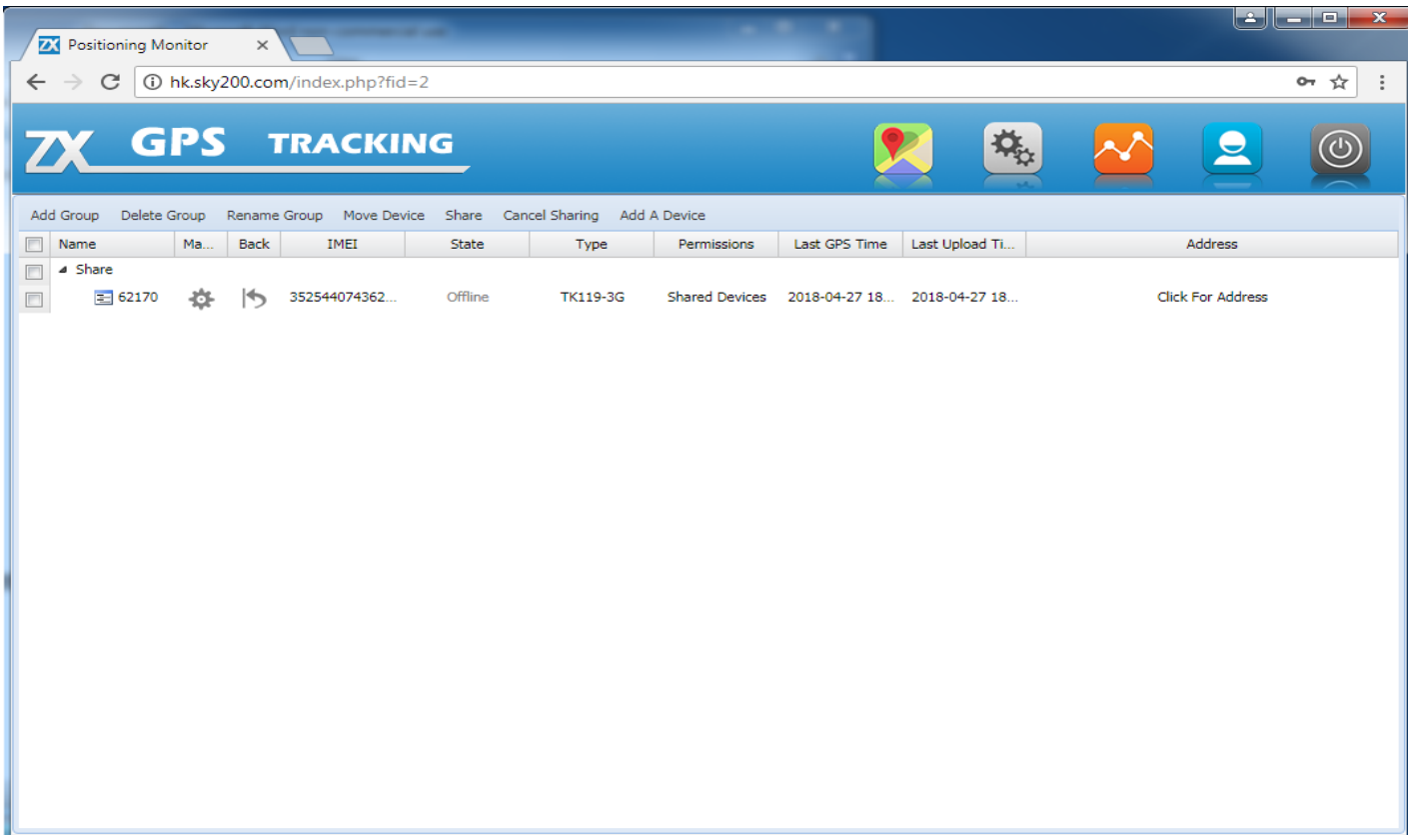

Section 3.1 Device Management

This screen shows all of the tracker devices that you are monitoring. The device information includes the following:

- IMEI Identification number
- State: Offline/Online
- Type: GPS tracker version
- Permission: Shared device/Private/etc.
- Last GPS Time: Tracker time last activated
- Last Upload Time: Tracker data last uploaded
- Address: Previously traced address.

On this screen, you can create/delete groups, add/delete devices. These options provide users the ability to track and monitor each tracker device efficiently.

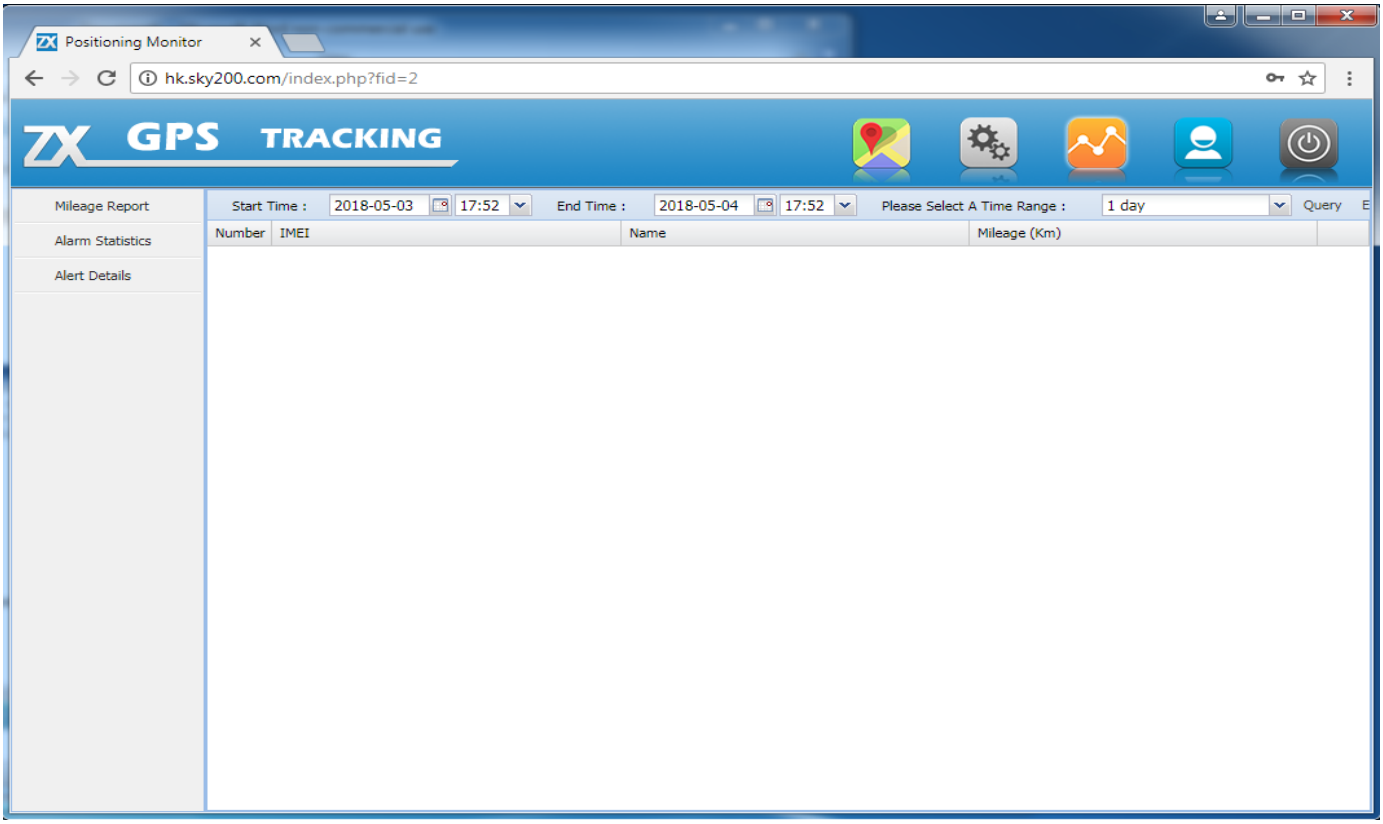

Section 3.2 Statistics

This screen gathers all the statistics about the tracker devices. Click on the left sidebar to choose from:

- Mileage Report – Outputs the total distance tracked by device. Users can select in the pull-down menus for a specific time range to track and monitor mileages information.

- Alarm Statistics – Outputs the date/time/location on where the alarms were activated for each tracker devices.

- Alert Details – Outputs warnings/alerts sent from tracker device, for example, exiting/entering geofence, fuel cut-off/recovery and changes in device settings, etc.

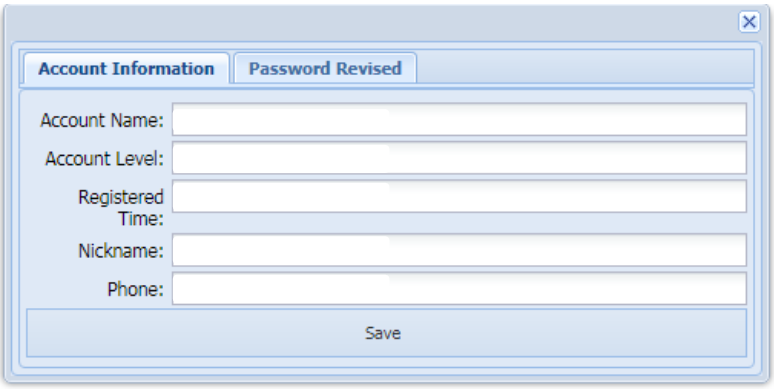

Section 3.3 Account Information

Account Information tab provide some general details about your device including:

- Account Name – Logged in detail
- Account Level – From basic to administrator level, each level will have different permission.
- Registered Time – Date/time on the first activation.
- Nickname – Username detail
- Phone – Mobile phone number connected with SIM card

Click on the Password Revised tab to change your password.

- Enter a new password in the required field.
- Enter again, to confirm the new password.

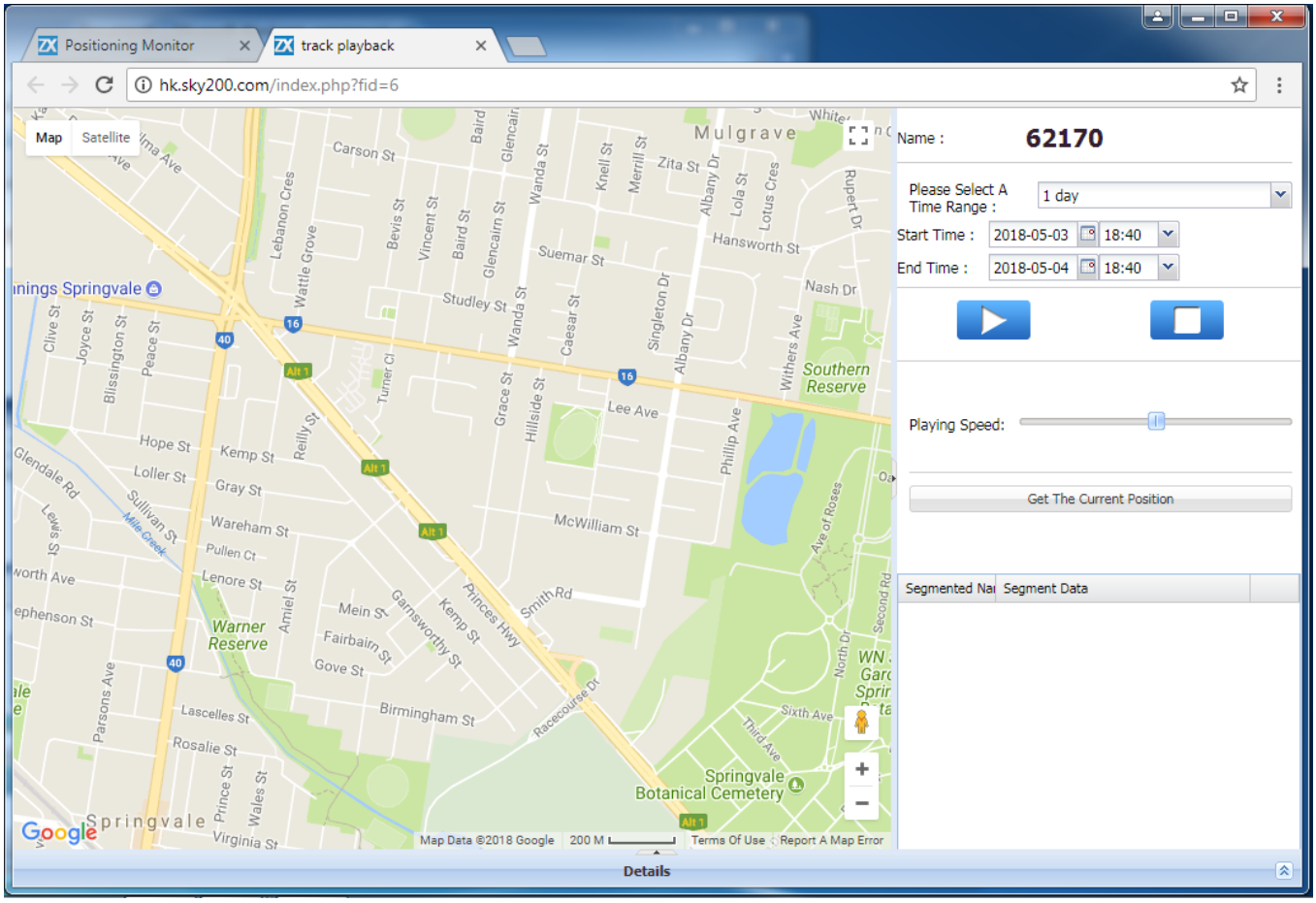

Sectio 3.4 Monitor and Trace - Playback

Pressin g on the 'Playback' option brings you to this screen. The 'Playback' feature is for monitoring previous route tracked by the device. The traced route is specific to each device which can be selected in the main menu.

To select the playback options, follow the procedures below:

- On the righthand-side menu, select from the playback time frame of '1 day', '1 week', '1 month' and '3 months', etc.
- Select the 'Start time' and 'End time' that you wish to playback.
- Press on the 'Play' button to proceed with the playback.
- Press on the 'Stop' button to pause or exit.
- Other options such as the playing speed, are self-explanatory.

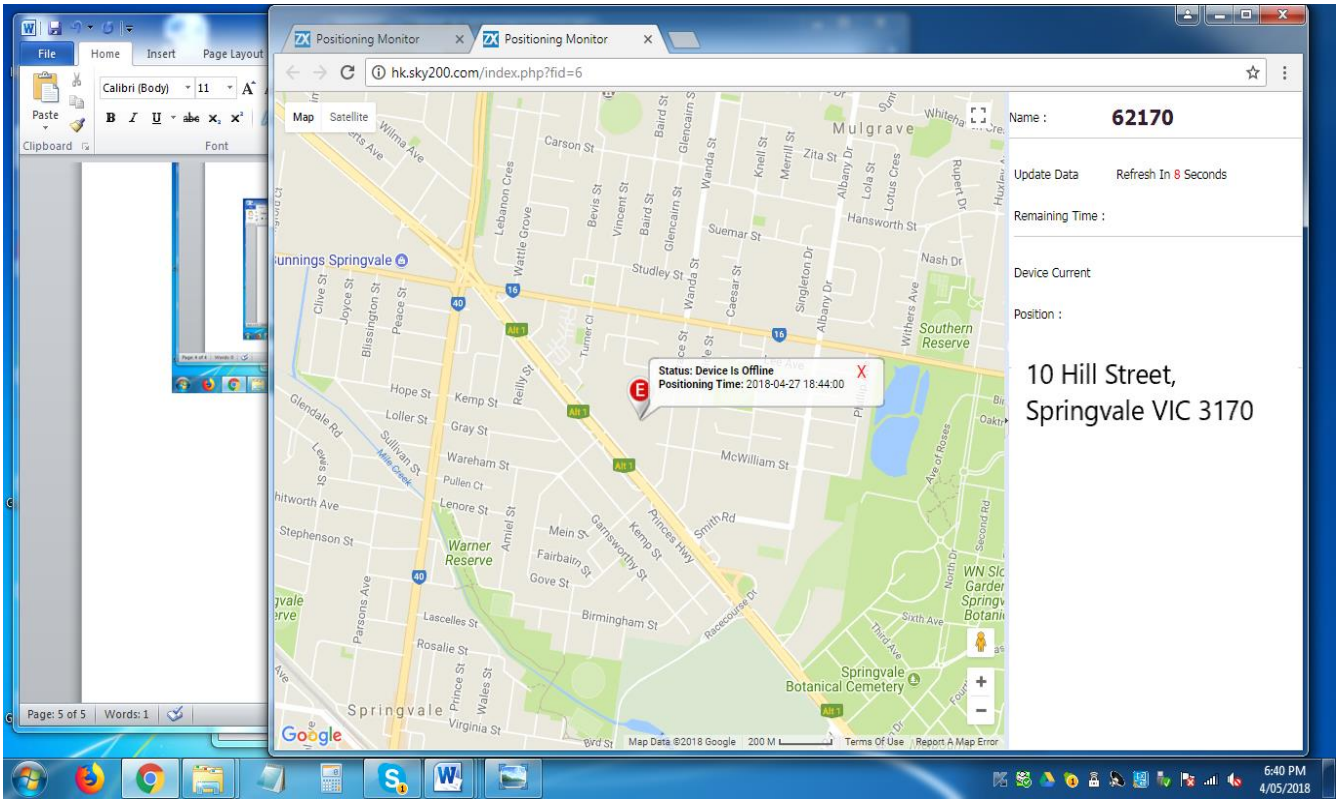

Section 3.4 Monitor and Trace - Playback

Pressing on the 'Playback' option brings you to this screen. The 'Playback' feature is for monitoring previous route tracked by the device. To select the playback options, follow the procedures below:

- On the righthand-side menu, select from the playback time frame of '1 day', '1 week', '1 month' and '3 months', etc.
- Select the 'Start time' and 'End time' that you wish to playback.
- Press on the 'Play' button to proceed with the playback.
- Press on the 'Stop' button to pause or exit.
- Other options such as the playing speed, are self-explanatory.

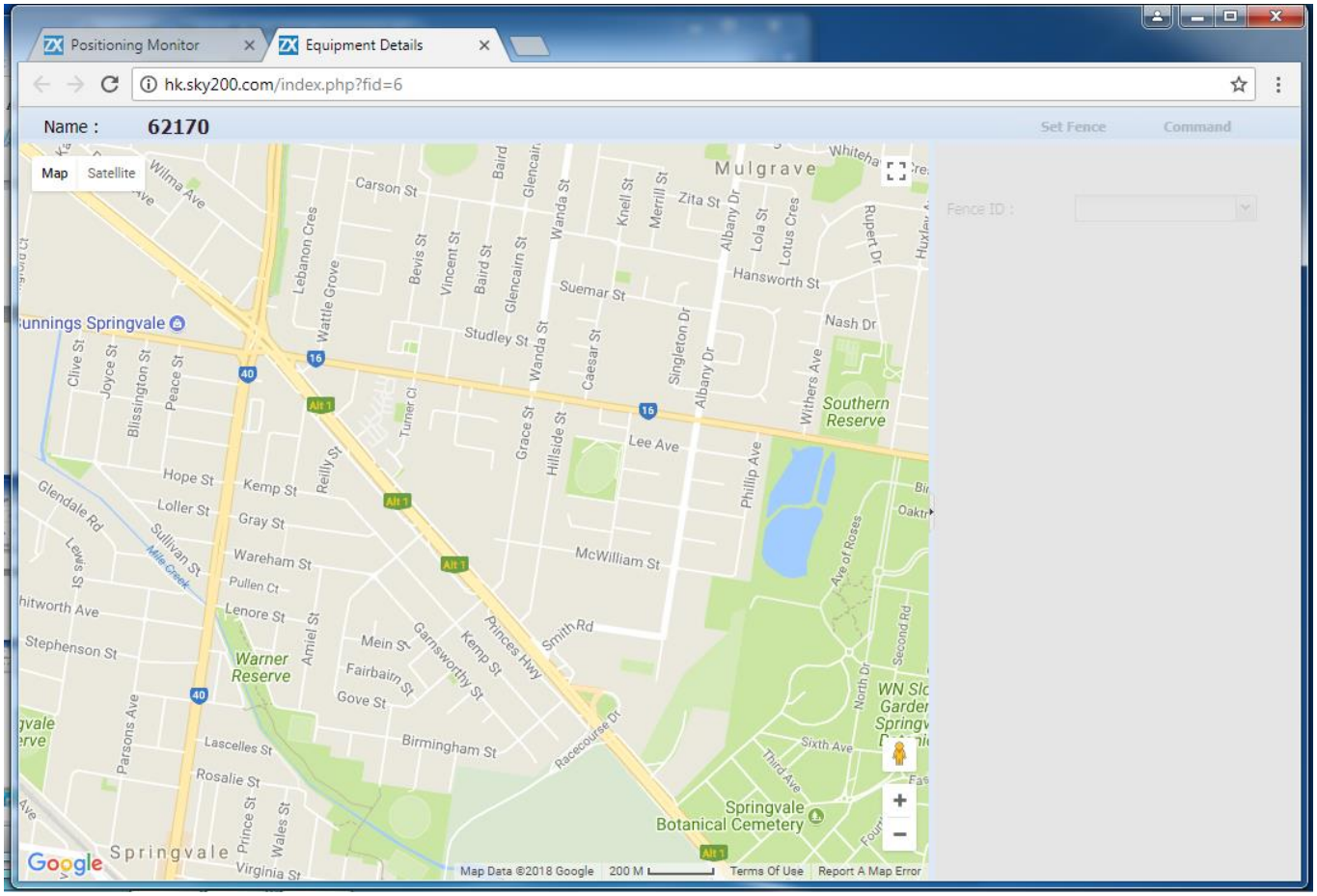

Section 3.4 Monitor and Trace - More

Pressing on the 'More' button brings you to this screen. The 'More' option provides information about the map geo-fence location. If you have set a geo-fence via SMS commands, you can view and select the Fence ID.

www.elinz.com.au

GPSTRACKWIRE GPS IOS Application

Follow the procedures in each section below to correctly register and operate the GPSTRACKWIRE GPS tracker with 'Keelin'.

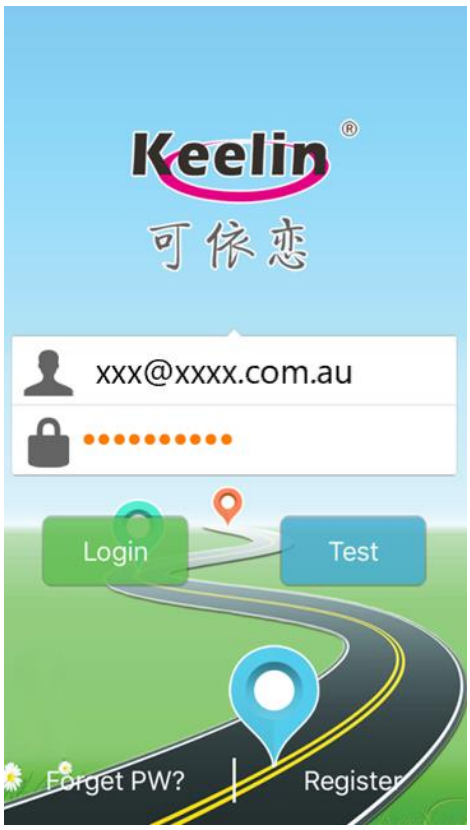

For first-time use, you must register for an account using Keelin with the GPSTRACKWIRE GPS tracker serial number.

1. Open the 'Keelin' app.

On the **'Main Screen'**:

- Press on 'Register' to register your GPSTRACKWIRE GPS tracker.
- If you have registered for an account, enter your email address and password to login.

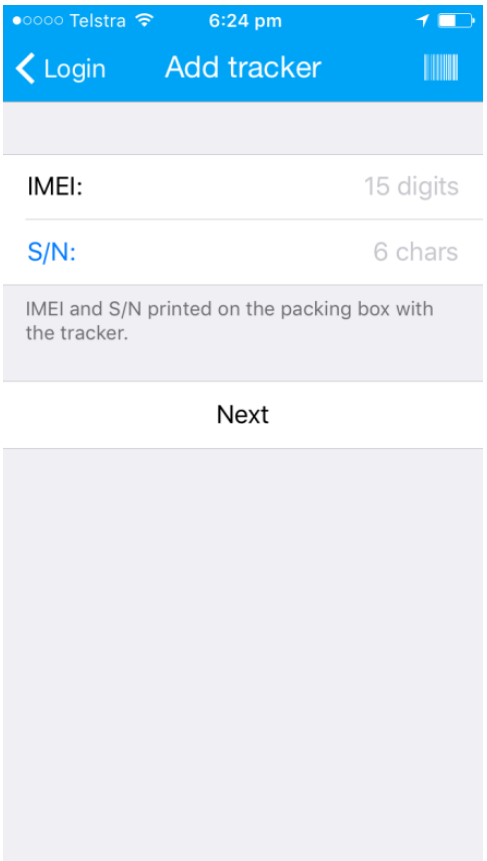

2. Locate the IMEI number and S/N character on the GPSTRACKWIRE GPS tracker.

On the **'Add tracker'** screen:

- Enter the 15 digits IMEI number on this screen
- Enter the S/N 6 characters
- Press on 'Next' to continue

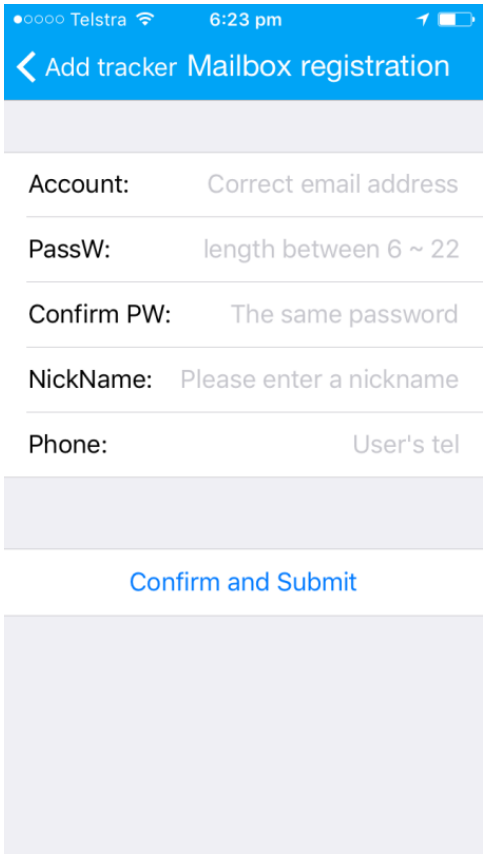

3. Register your details

On the **'Mailbox Registration'** screen:

- Enter your email address in 'Account'.
  - Do note that your email address cannot be changed once registered.
- Enter your password in 'PassW'.
  - Password length must be between 6-22 characters.
- To confirm your password, re-enter in 'Confirm PW'.
- Enter a username for your account in 'NickName'.
- Enter your mobile phone number in 'Phone'.
- Press on 'Confirm and Submit'

Once this section is completed, Keelin will move you back to the **Main Screen.**

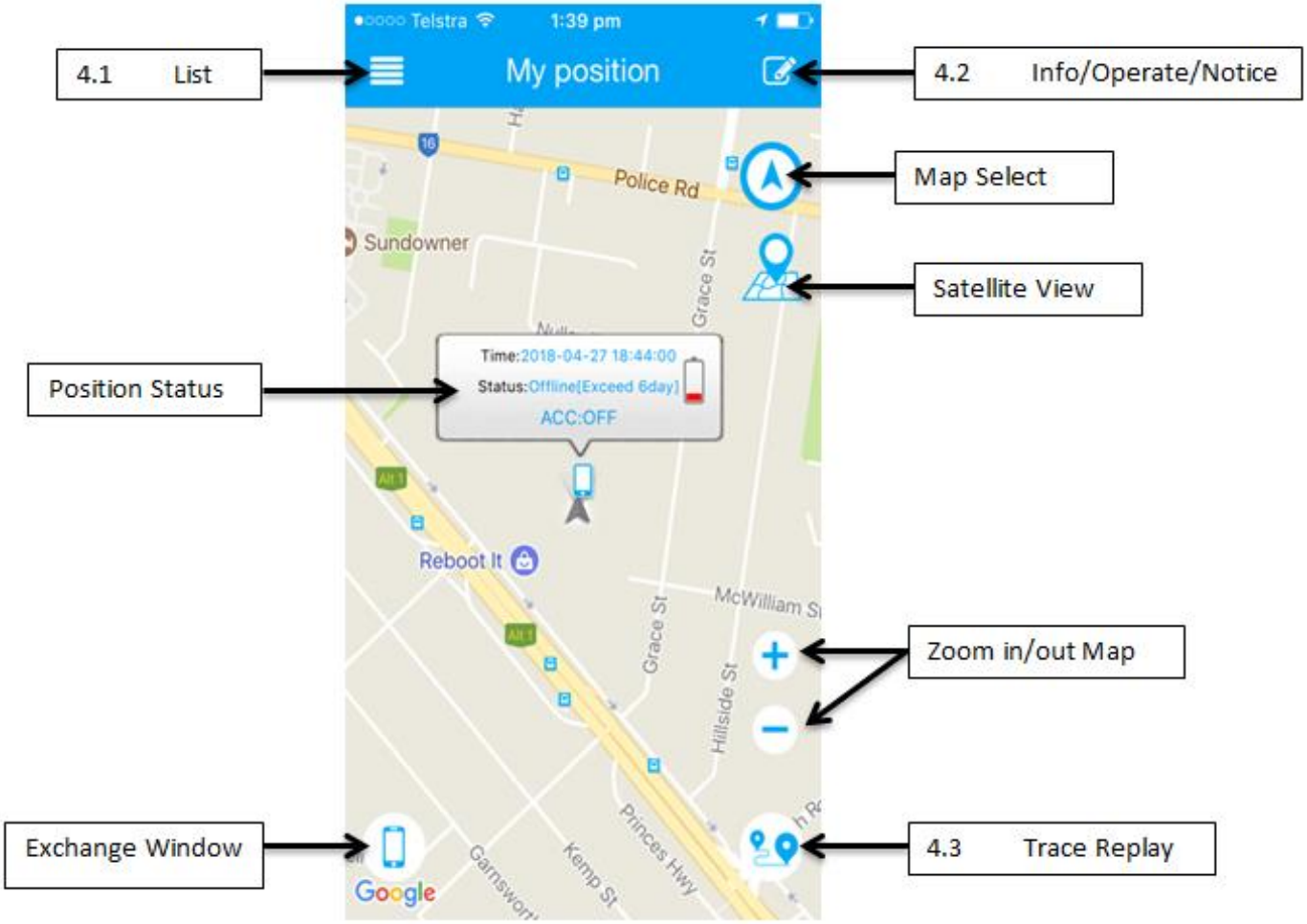

4. Once logged in, the next screen is the main menu.

On the **'My Position'** screen, press and proceed to the subsequent sections for reference.

- Press 'List', proceed to Section 4.1.
- Press 'Info/Operate/Notice', proceed to Section 4.2.
- Press 'Trace Replay', proceed to Section 4.3.
- Press 'Map Select' to access a specific map provider
- Press 'Satellite View' to show the satellite image of your map.
- Press the positive sign to 'Zoom in' or the negative sign to 'Zoom out'.
- Press the 'Exchange Window' to locate your current position. This function also provides the tracker 'Position Status' including, time, offline/online status and mobile phone battery.

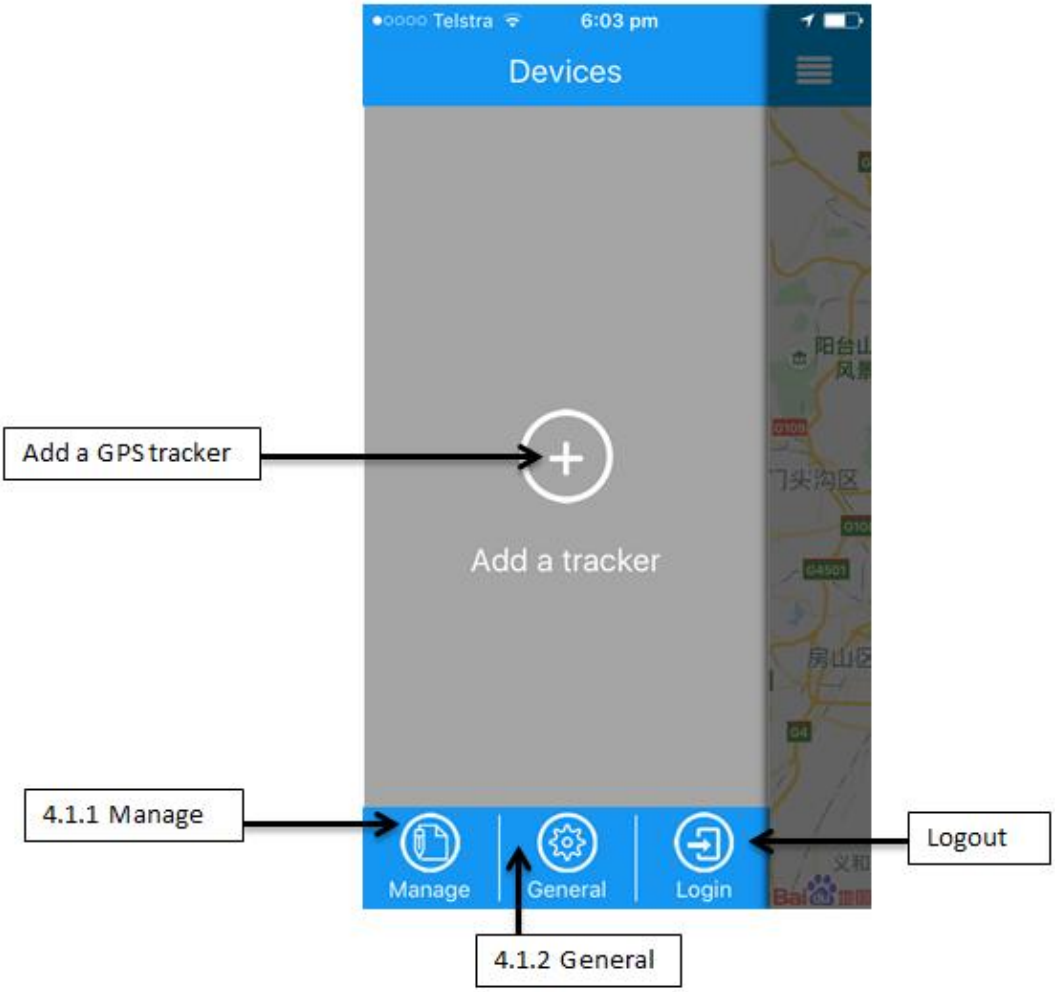

4.1 List pane

A left-pane shows the following information about the tracker.

- Press 'Manage', proceed to Section 4.1.1.
- Press 'General', proceed to Section 4.1.2
- To monitor an active GPS tracker, press 'Add a GPS tracker' and follow the prompts.

- Press 'Logout' to exit the Keelin app.

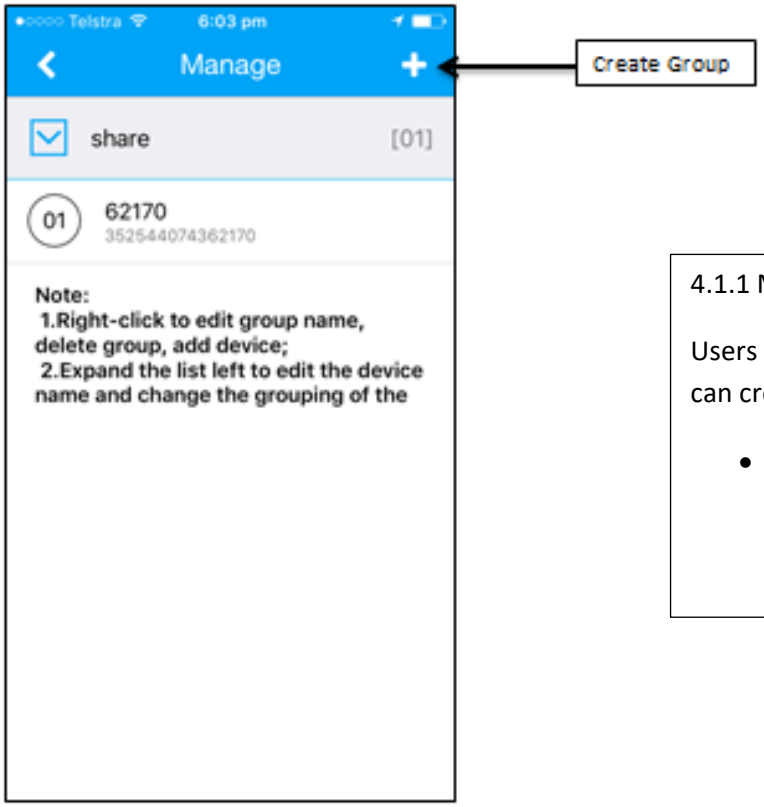

4.1.1 Manage

Users can monitor shared tracker information and can create multiple groups.

- Press on positive sign to 'Create Group'. Enter the group name and add.

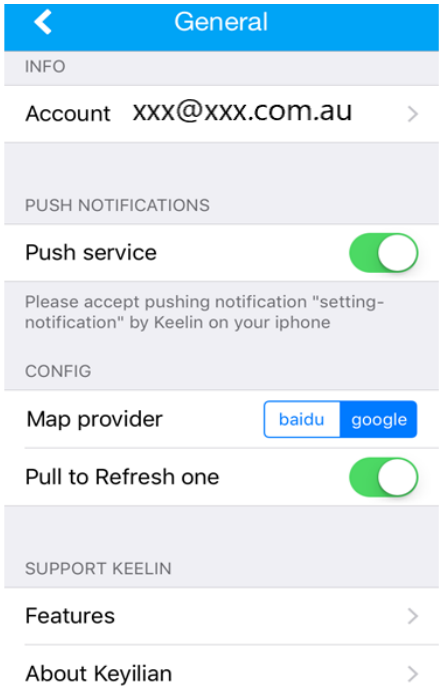

4.1.2 General

This tab shows the general tracker information:

- Press on 'Account' to show the user information which includes the email address, username, activated date and mobile phone number.
- To enable Keelin notifications, slide 'Push Service' on.
- Keelin uses Google Maps as default. To select another option for map services, press on 'baidu'.
- To refresh the Keelin map on the Main screen, slide 'Pull to Refresh one' on.

Further information about the Keelin IOS app version and its developers, press on 'Features' and 'About Keyilian'.

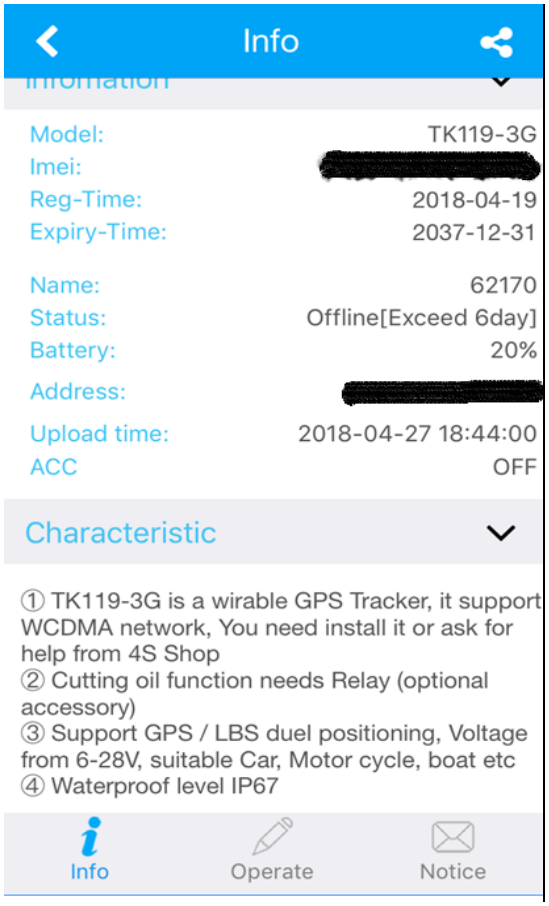

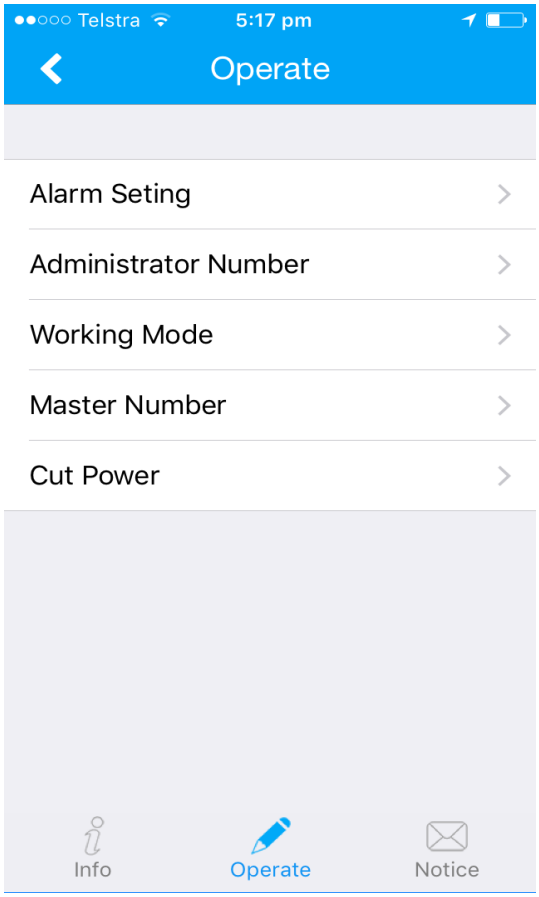

4.2 Info/Operate/Notice

Press on the 'Info' tab:

This section provides you with all the information about the GPS tracker, for example, the tracker model, serial number, activating start/end dates and current position, etc.

Press on the 'Operate' tab:

There are several functions that the user can set. This section requires the user to activate and successfully connect the tracker to a vehicle or a power source.

- Alarm Setting
  - The alarm setup is linked with the GPS tracker. Alarm notifications are sent to the mobile device of the user and the administrator. There are different options that can be setup including, [].
- Administrator Number
  - Multiple emergency or administrator numbers can be setup in Keelin.
- Working Mode
  -
- Master Number
  -
- Cut Power
  - Cuts power/fuel to the vehicle (or the tracker?) if conditions are met. Only the administrator the permission to deactivate the device.

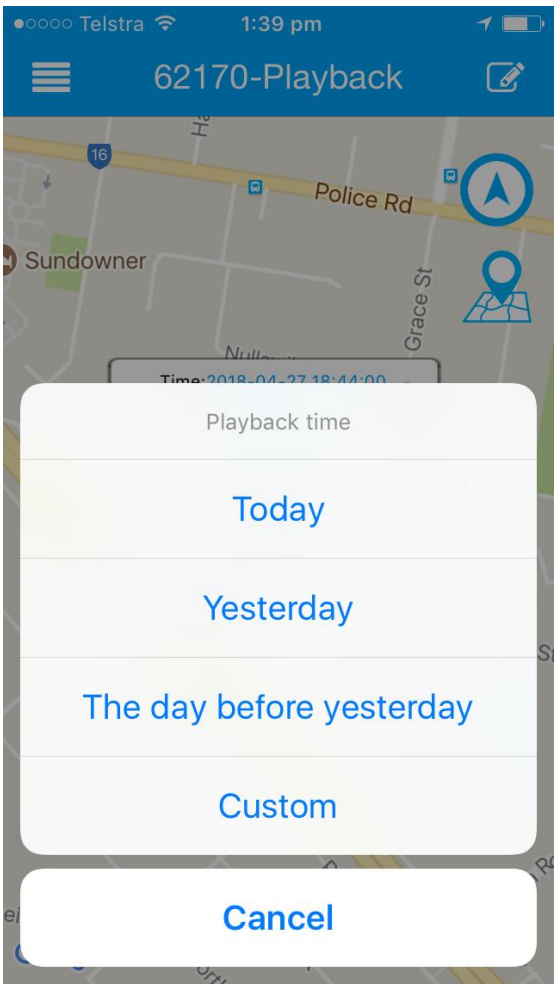

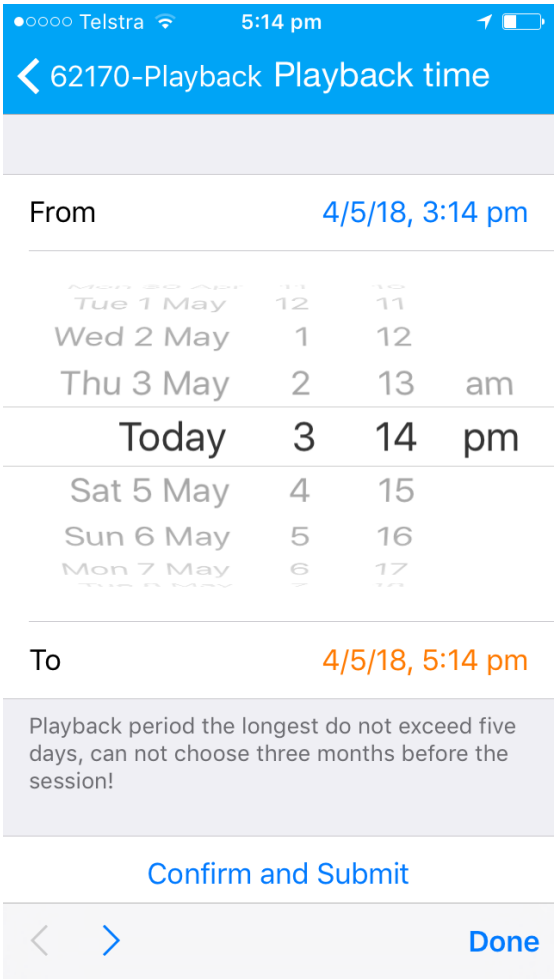

4.3 Trace Replay

Shows the route of the vehicle equipped with the GPS tracker.

- To playback previous route, press on 'Today', 'Yesterday' and 'The day before yesterday'.
- Press on 'Custom', enter a specific time and date and press 'Confirm and Submit' to playback trace.

If you have further questions or clarifications feel free to contact us at **1300 881 773** or send us an email to **sales@elinz.com.au**