BT521

Battery Analyzer

Users Manual

March 2014

© 2014 Fluke Corporation. All rights reserved. Specifications are subject to change without notice.
All product names are trademarks of their respective companies.

LIMITED WARRANTY AND LIMITATION OF LIABILITY

Each Fluke product is warranted to be free from defects in material and workmanship under normal use and service. The warranty period is three years and begins on the date of shipment. Parts, product repairs, and services are warranted for 90 days. This warranty extends only to the original buyer or end-user customer of a Fluke authorized reseller, and does not apply to fuses, disposable batteries, or to any product which, in Fluke's opinion, has been misused, altered, neglected, contaminated, or damaged by accident or abnormal conditions of operation or handling. Fluke warrants that software will operate substantially in accordance with its functional specifications for 90 days and that it has been properly recorded on non-defective media. Fluke does not warrant that software will be error free or operate without interruption.

Fluke authorized resellers shall extend this warranty on new and unused products to end-user customers only but have no authority to extend a greater or different warranty on behalf of Fluke. Warranty support is available only if product is purchased through a Fluke authorized sales outlet or Buyer has paid the applicable international price. Fluke reserves the right to invoice Buyer for importation costs of repair/replacement parts when product purchased in one country is submitted for repair in another country.

Fluke's warranty obligation is limited, at Fluke's option, to refund of the purchase price, free of charge repair, or replacement of a defective product which is returned to a Fluke authorized service center within the warranty period.

To obtain warranty service, contact your nearest Fluke authorized service center to obtain return authorization information, then send the product to that service center, with a description of the difficulty, postage and insurance prepaid (FOB Destination). Fluke assumes no risk for damage in transit. Following warranty repair, the product will be returned to Buyer, transportation prepaid (FOB Destination). If Fluke determines that failure was caused by neglect, misuse, contamination, alteration, accident, or abnormal condition of operation or handling, including overvoltage failures caused by use outside the product’s specified rating, or normal wear and tear of mechanical components, Fluke will provide an estimate of repair costs and obtain authorization before commencing the work. Following repair, the product will be returned to the Buyer transportation prepaid and the Buyer will be billed for the repair and return transportation charges (FOB Shipping Point).

THIS WARRANTY IS BUYER'S SOLE AND EXCLUSIVE REMEDY AND IS IN LIEU OF ALL OTHER WARRANTIES, EXPRESS OR IMPLIED, INCLUDING BUT NOT LIMITED TO ANY IMPLIED WARRANTY OF MERCHANTABILITY OR FITNESS FOR A PARTICULAR PURPOSE. FLUKE SHALL NOT BE LIABLE FOR ANY SPECIAL, INDIRECT, INCIDENTAL OR CONSEQUENTIAL DAMAGES OR LOSSES, INCLUDING LOSS OF DATA, ARISING FROM ANY CAUSE OR THEORY.

Since some countries or states do not allow limitation of the term of an implied warranty, or exclusion or limitation of incidental or consequential damages, the limitations and exclusions of this warranty may not apply to every buyer. If any provision of this Warranty is held invalid or unenforceable by a court or other decision-maker of competent jurisdiction, such holding will not affect the validity or enforceability of any other provision.

Fluke Corporation P.O. Box 9090 Everett, WA 98206-9090 U.S.A.	Fluke Europe B.V. P.O. Box 1186 5602 BD Eindhoven The Netherlands

11/99

Table of Contents

Chapter	Title	Page
1	**Product Overview and Specifications**	**1-1**
	Introduction	1-1
	Contact Fluke	1-1
	Product Overview	1-1
	Standard Equipment	1-3
	Safety Information	1-4
	Keys and I/O Terminals of the Product	1-6
	General Specifications	1-8
	Accuracy Specifications	1-9
2	**Basic Operation and Setup of the Product**	**2-1**
	Introduction	2-1
	Tilt Stand	2-1
	Adjust Display Contrast	2-2
	Set Language	2-2
	Set Date and Time	2-2
	Turn On/Off Beep	2-3
	AutoHold and AutoSave Modes	2-3
	Set Auto Power Off Time	2-4
	View Device Information	2-4
	Reset to Factory Mode	2-4
	View Memory Usage Information	2-4
3	**Use the Product**	**3-1**
	Introduction	3-1
	Switch Between Meter Mode and Sequence Mode	3-1
	Use a Profile in Sequence Mode	3-3
	Manage Profiles	3-3
	Create a Profile	3-3
	Edit a Profile	3-4
	Edit a Profile During Creation	3-4
	Modify a Profile During Measurement	3-4
	Load a Profile	3-5

Load a Profile When Switched to Sequence Mode 3-5
Make Measurements 3-5
Test Battery Resistance and Voltage 3-5
Battery Test Probes 3-6
View Test Readings on the Screen 3-6
Set Measurement Range 3-7
Save Battery Test Readings 3-8
Erase Test Readings 3-8
Activate Low-Pass Filter for Resistance Measurement 3-8
Set Measurement Thresholds 3-9
How the Thresholds Work 3-10
Measure DC Voltage 3-11
Set Measurement Range 3-11
Save DC Voltage Readings 3-11
Measure AC Voltage 3-12
Measurement Range 3-12
Save AC Voltage Readings 3-12
Measure Ripple Voltage 3-13
Set Measurement Range 3-13
Save Ripple Voltage Readings 3-13
Measure Discharge Voltage 3-13
Make Measurements 3-13
Typical Display 3-14

4 Use the Handle and Probes 4-1

Introduction 4-1
BTL21 Overview 4-1
Connect the Probe to the Product 4-2
Configure the Handle on the Product 4-2
Set the Handle Audio 4-2
Set Temperature Unit 4-2
Turn On/Off the Handle Power (BTL20/BTL21) 4-3
Understand the Handle Display 4-3
Interchange Long and Short Probes 4-4
Replace the Probe Tips 4-5
Use the Attachable Torch 4-5
Zero Calibration 4-6
Measure Temperature 4-6

5 View Memory 5-1

Introduction 5-1
View Data Saved in Meter Mode 5-1
Delete Data Saved in Meter Mode 5-1
View Profiles Saved in Sequence Mode 5-2
Delete Profiles Saved in Sequence Mode 5-2

6 Connection to PC or Mobile Device 6-1

Introduction 6-1
Connect the Product to PC 6-1
Connect the product to Mobile device 6-1

7 Maintenance 7-1

Introduction 7-1

Install or Replace the Battery Pack 7-3
Replace the Fuse 7-4
Clean the Product 7-5
Charge the Battery 7-5
Parts and Accessories 7-6

List of Tables

Table	Title	Page
1-1.	Standard Equipment	1-3
1-2.	Symbols	1-5
1-3.	Keys of the Product	1-6
4-1.	Elements of the Handle	4-2
4-2.	Typical Elements on the Handle Display	4-3
7-1.	Parts and Accessories	7-6

List of Figures

Figure	Title	Page
1-1.	I/O Terminals of the Product	1-7
2-1.	Tilt Stand, USB Port and Battery Charger Input.	2-1
3-1.	Test Battery Resistance and Voltage	3-5
3-2.	Connect Test Lead to Battery Pole	3-6
3-3.	Measure DC Voltage	3-11
3-4.	Measure AC Voltage	3-12
4-1.	Interactive Handle	4-1
4-2.	Interchange the Long and Short Probes	4-4
4-3.	Replace the 4-Wire Pins	4-5
4-4.	Attachable Torch	4-5
4-5.	Meaure the Temperature of a Battery Pole	4-6
7-1.	Install or Replace a Battery Pack	7-3
7-2.	Replace the Fuse	7-4

Chapter 1
Product Overview and Specifications

Introduction

This chapter supplies information about the Product, safety information, contact information, and specifications.

Contact Fluke

To contact Fluke, call one of the following telephone numbers:

- Technical Support USA: 1-800-44-FLUKE (1-800-443-5853)
- Calibration/Repair USA: 1-888-99-FLUKE (1-888-993-5853)
- Canada: 1-800-36-FLUKE (1-800-363-5853)
- Europe: +31 402-675-200
- China: +86-400-810-3435
- Japan: +81-3-6714-3114
- Singapore: +65-6799-5566
- Anywhere in the world: +1-425-446-5500

Or, visit Fluke's website at www.fluke.com.

To register your product, visit http://register.fluke.com.

To view, print, or download the latest manual supplement, visit http://us.fluke.com/usen/support/manuals.

Product Overview

The Fluke BT521 Battery Analyzer (the Product) is a multifunctional meter designed for the test and measurement of a stationary battery system. The Product can measure the battery internal resistance (hereinafter referred to as “resistance”) and voltages. These measurements can be used to determine the overall condition of the system. It can also measure electrical parameters for battery system maintenance, including dc voltage up to 1000 V, ac voltage up to 600 V, and ripple voltage.

Features of the Product include:

- **Threshold and Warning** – Users can configure a maximum of 10 sets of thresholds and receive a Pass/Fail/Warning indication after each measurement.
- **Meter and Sequence Modes** – The Meter mode is for a quick test or trouble-shooting. In this mode you can save and read the readings in a time sequence. The Sequence mode is for maintenance tasks with multiple power systems and battery

strings. Before a task starts, users can configure a profile for the task for data management and report generation.

- **Discharge Volts** – The Discharge mode collects the voltage of each battery several times at a certain interval during a discharge or load test. Users can calculate the time a battery takes to drop to the cut-off voltage and use this time to determine the capacity loss of this battery.
- **AutoHold** – When AutoHold is turned on, the Product freezes the reading when it remains stable for 1 second. The frozen reading is released when a new measurement starts.
- **AutoSave** – When the AutoSave mode is on, measured values are saved to the internal memory of the Product automatically after AutoHold.
- **CAT III 600 V Safety Rated** – The product can measure a maximum of 600 V ac in a Category III environment.
- **Ripple Voltage Test** – Measures the unwanted residual ac component of the rectified voltage in dc charging and inverter circuits. Allows users to test ac components in dc charging circuits and find one of the root causes of battery deterioration.
- **Fluke Battery Analyze Software** – Easily import data from the Product to a PC. The measurement data and battery profile information is stored and archived with the Analyze Software and can be used for comparison and trend analysis. All measurement data, battery profile and analysis information can be used to easily generate reports.

Standard Equipment

The items listed in Table 1-1 are included with the Product.

Table 1-1. Standard Equipment

Item No.	Description	Quantity	Remarks
1	BT521 Meter	1	
2	BP500 (battery)	1	7.4 V 3000mAh Lithium-ion battery
3	BC500 (charger)	1	18 V dc power adapter
4	Power cord	1	
5	BTL10	1	
6	BTL Adapter	1	
7	TL175	1	
8	Current clamp i410	1	
9	Magnetic plate	1	
10	Belt strap	1	
11	Shoulder strap	1	
12	USB cable	1	Cable length: 1m
13	Safety Sheet	1	
14	Large bag	1	
15	Zero calibration	1	
16	BTL21	1	
17	Torch	2	
18	Spare fuse	1	

Safety Information

A **Warning** identifies conditions and procedures that are dangerous to the user. A **Caution** identifies conditions and procedures that can cause damage to the Product or the equipment under test.

⚠⚠Warning

To prevent possible electrical shock, fire, or personal injury:

- **Carefully read all instructions.**
- **Read all safety information before you use the Product.**
- **Use the Product only as specified, or the protection supplied by the Product can be compromised.**
- **Do not use the Product around explosive gas, vapor, or in damp or wet environments.**
- **Do not use the Product if it is damaged.**
- **Do not use the Product if it operates incorrectly.**
- **Do not apply more than the rated voltage, between the terminals or between each terminal and earth ground.**
- **Do not touch voltages > 30 V ac rms, 42 V ac peak, or 60 V dc.**
- **Do not exceed the Measurement Category (CAT) rating of the lowest rated individual component of a Product, probe, or accessory.**
- **Do not use the HOLD function to measure unknown potentials. When HOLD is turned on, the display does not change when a different potential is measured.**
- **Do not use test leads if they are damaged. Examine the test leads for damaged insulation or exposed metal. Check test lead continuity.**
- **Avoid simultaneous contact with battery and frame racks or hardware that may be grounded.**
- **Comply with local and national safety codes. Use personal protective equipment (approved rubber gloves, face protection, and flame-resistant clothes) to prevent shock and arc blast injury where hazardous live conductors are exposed.**
- **Examine the case before you use the Product. Look for cracks or missing plastic. Carefully look at the insulation around the terminals.**
- **Use only correct measurement category (CAT), voltage, and amperage rated probes, test leads, and adapters for the measurement.**
- **Measure a known voltage first to make sure that the Product operates correctly.**
- **Limit operation to the specified measurement category, voltage, or amperage ratings.**
- **Keep fingers behind the finger guards on the probes.**
- **Remove all probes, test leads, and accessories before the battery door is opened.**
- **Use the correct terminals, function, and range for measurements.**

- **Use only current probes, test leads, and adapters supplied with the Product.**
- **Install the CAT III protective cap of test lead when you use the product in CAT III environment. The CAT III protective cap decreases the exposed probe metal to < 4 mm.**
- **Do not operate the Product with covers removed or the case open. Hazardous voltage exposure is possible.**

See Table 1-2 for a list of symbols used in this manual and on the Product.

Table 1-2. Symbols

Symbol	Description	Symbol	Description
⚠	Risk of danger. Important information. See manual.	≂	AC (Alternating Current)
⚠	Hazardous voltage.	⎓	DC (Direct Current)
⏚	Earth ground.		Battery
	Fuse	CAT II	Measurement Category II is applicable to test and measuring circuits connected directly to utilization points (socket outlets and similar points) of the low-voltage MAINS installation.
CAT III	Measurement Category III is applicable to test and measuring circuits connected to the distribution part of the building's low-voltage MAINS installation.	CAT IV	Measurement Category IV is applicable to test and measuring circuits connected at the source of the building's low-voltage MAINS installation.
TÜV SÜD	Inspected and licensed by TÜV Product Services.	C US	Conforms to relevant North American Safety Standards.
CE	Conforms to European Union directives.		Conforms to relevant Australian Standards.
	This product complies with the WEEE Directive (2002/96/EC) marking requirements. The affixed label indicates that you must not discard this electrical/electronic product in domestic household waste. Product Category: With reference to the equipment types in the WEEE Directive Annex I, this product is classed as category 9 "Monitoring and Control Instrumentation" product. Do not dispose of this product as unsorted municipal waste. Go to Fluke's website for recycling information.		

Keys and I/O Terminals of the Product

Table 1-3 identifies and describes the keys.

Table 1-3. Keys of the Product

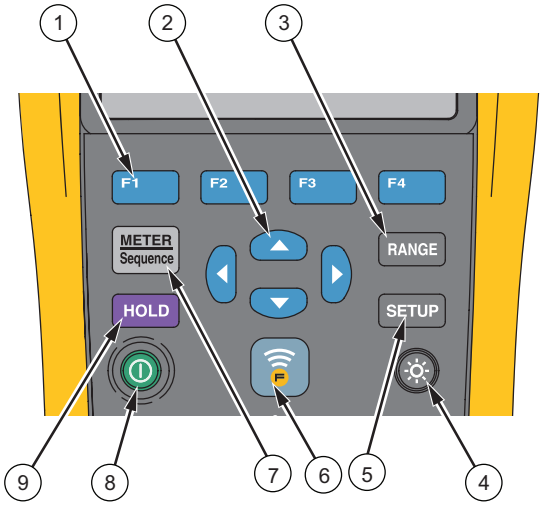

hsz001.eps

Item	Key	Function
①	F1 F2 F3 F4	Softkeys that work flexibly for various functions on the display.
②		Selects an item in a menu and scrolls through information.
③	RANGE	Switches between manual ranging and auto ranging. Cycles through all ranges in manual ranging mode.
④		Turns on or turns off backlight.
⑤	SETUP	Opens the Setup menu for configurations such as contrast, language, date/time, and power off time.
⑥		Enables connection between the Product and nearby mobile devices for data transmission.
⑦	METER Sequence	Switches between Meter and Sequence measurement modes. For details, see Chapter 3. Switches between Meter and Sequence memories. For details, see Chapter 4.
⑧		Turns on or turns off the Product.
⑨	HOLD	Freezes the current reading on the display and allows the display reading to be saved. Also enables AutoHold.

Figure 1-1 shows the terminals of the Product.

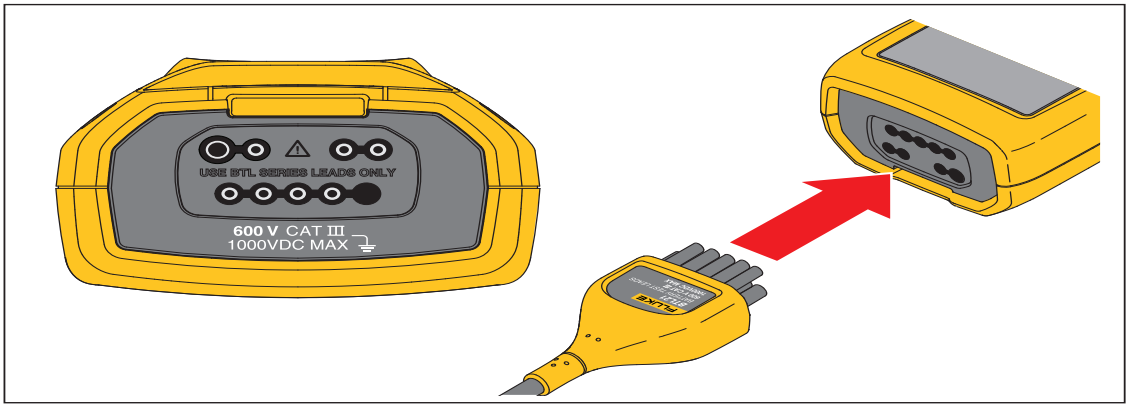

hpo002.eps

Figure 1-1. I/O Terminals of the Product

General Specifications

⚠ **Fuse Protection for Resistance**	0.44 A (44/100 A, 440 mA), 1000 V FAST Fuse, Fluke specified part only
Power Supply	
Battery power	BP500 smart battery pack: double cell lithium-ion, 7.4 V, 3000 mAh
Battery life	>8 hours in continuous full-load operation
Battery charging time	≤4 hours
Power adapter output voltage	Use only BC500 battery charger: 18 V, 840 mA
Line power	100 V ac to 240 V ac adapter with country specific plug
Frequency	50 Hz to 60 Hz
Temperature	
Operating	0 °C to 40 °C
Storage	-20 °C to 50 °C
Lithium-ion battery charging	0 °C to 40 °C
Relative Humidity (non-condensing, 10 °C)	
Operating	≤80 % at 10 °C to 30 °C
	≤75 % at 30 °C to 40 °C
Storage	≤95 %
Altitude	
Operating	2,000 m
Storage	12,000 m
Temperature Coefficient	0.1 x (specified accuracy) /°C (<18 °C or >28 °C)
Vibration	Complies with MIL-PRF-28800F Class 2
Dimensions	
Length	220 mm
Width	103 mm
Depth	58 mm
Weight	850 g
Screen Size	77.00 mm x 56.50 mm
Memory	
Data/Setup flash memory	8 MB
IP Rating	IEC 60529: IP 40
Safety	IEC 61010-1, IEC 61010-2-030, Pollution Degree 2
	600 V CAT III, 1000 V dc max; Derated to CAT II with CAT II probe cap installed
Electromagnetic Environment	IEC 61326-1: Portable
Certifications	CE, CSA, TÜV,

Accuracy Specifications

Accuracy is specified for a period of one year after calibration, at 18 °C to 28 °C (64 °F to 82 °F), with relative humidity to 80 %. Accuracy specifications are given as: ±([% of reading] + [number of least significant digits]). Accuracy specification assumes ambient temperature stable ±1 °C.

Function	Range	Resolution	Accuracy
Battery Resistance[1]	3 mΩ	0.001 mΩ	1 % + 8
	30 mΩ	0.01 mΩ	0.8 % + 6
	300 mΩ	0.1 mΩ	0.8 % + 6
	3000 mΩ	1 mΩ	0.8 % + 6
V dc	6 V	0.001 V	0.09 % +5
	60 V	0.01 V	
	600 V	0.1 V	
	1000 V	1 V	
V ac (45 Hz to 500 Hz with low-pass filter)	600 V	0.1 V	2 % + 10
Frequency (Display with V ac) Trigger level: ≥ 10 mV @V ac; ≥ 10 A @A ac	45 Hz to 500 Hz	0.1 Hz	0.5 % + 8
AC Voltage Ripple (20 kHz max)	600 mV 6000 mV	0.1 mV 1 mV	3 % + 20 3 % + 10
Amps dc/Amps ac (With accessory Fluke i410)	400 A	1 A	3.5 % + 2
Temperature	0 °C to 60 °C	1 °C	±2 °C

[1] The measurement is based on ac injection method. The injected source signal is <100 mA, 1 kHz.

Chapter 2
Basic Operation and Setup of the Product

Introduction

This chapter describes the basic operation and setup of the Product.

Tilt Stand

The Product has a tilt stand that lets you see the screen at an angle when placed on a flat surface. See Figure 2-1. This figure also shows the locations of the USB port and the battery charger input. This port allows communication with bundled software.

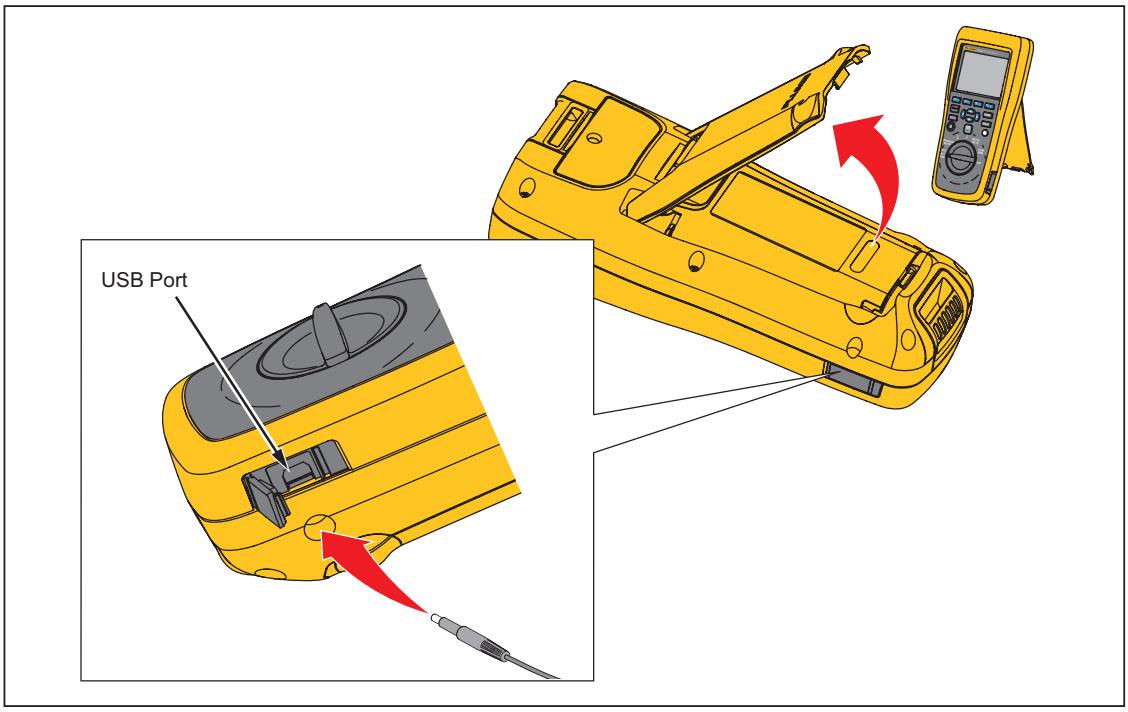

hsz007.eps

Figure 2-1. Tilt Stand, USB Port and Battery Charger Input

Adjust Display Contrast

To adjust display contrast:

1. Push SETUP to open the Setup menu.

   Contrast is already highlighted.

2. Push the **–** softkey to lighten contrast, or push the **+** softkey to darken contrast.

   Note

   If – is pushed too far, the display is blank.

3. Push the **Back** softkey to return to normal operation.

Set Language

The default display language is English. To select another language:

1. Push SETUP to open the Setup menu.
2. Use ▼ to move the menu selector to highlight **Language/English**.
3. Push the **Select** softkey to open the Language menu.
4. Use ▼ and ▲ to highlight the desired language, and then push the **Confirm** softkey.
5. Push the **Confirm** softkey to return to normal operation.

Set Date and Time

The internal clock of the Product is used on the display and for time-stamping recorded measurements.

To change the date and time:

1. Push SETUP to open the Setup menu.
2. Use ▼ and ▲ to highlight **General** and push the **Select** softkey.

   Date/time is selected by default.

3. Push the **Adjust** softkey to open the Date/time – Adjust screen.
4. Use ◀ and ▶ to highlight the field to be edited. Use ▲ and ▼ to increase or decrease value.
5. When the correct date and time is set, push the **OK** softkey.
6. Push the **Back** softkey to return to normal operation.

To change the date format:

1. Push SETUP to open the Setup menu.
2. Use ▼ and ▲ to highlight **General** and push the **Select** softkey.

   Date/time is selected by default.

3. Push the **Format** softkey to open the Date format menu.
4. Use ▼ and ▲ to highlight the correct date format.
5. Push the **Confirm** softkey.
6. Push the **Back** softkey to return to normal operation.

Turn On/Off Beep

To turn on or turn off beep:

1. Push SETUP to open the Setup menu.
2. Use ▽ to highlight **Beep**, and push the **Select** softkey.
3. Use △ and ▽ to highlight **Off** or **On**, and push the **Confirm** softkey.

AutoHold and AutoSave Modes

Note

AutoHold and AutoSave are only available for the Battery Resistance & Voltage and the Discharge functions.

When AutoHold is turned on, the "heart beat" icon shows on the display. The Product will hold the reading when it remains stable for 1 second. After a successful AutoHold, the **HOLD** icon shows on the display. The auto-held reading will not be released until the user disconnects the test leads from the test object.

In AutoSave mode, the **AutoSave** icon shows on the display. The auto-held reading will be automatically saved to the internal memory.

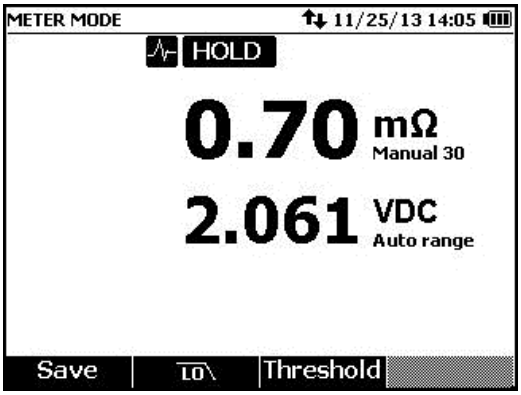

hpo049.jpg

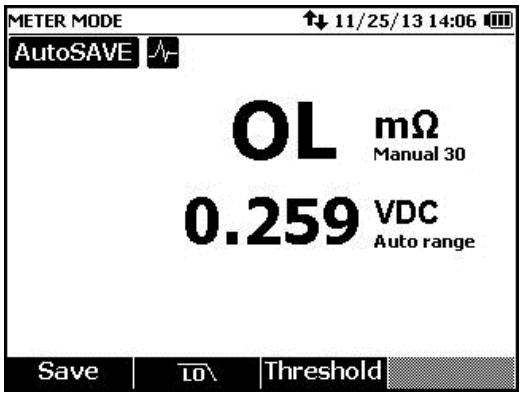

hpo048.jpg

⚠⚠Warning

To prevent possible electrical shock, fire, or personal injury, do not use the HOLD function to measure unknown potentials. When HOLD is turned on, the display does not change when a different potential is measured.

To set AutoHold and AutoSave mode:

1. Push SETUP to open the Setup menu.
2. Use ▽ and △ to highlight **Auto mode**.
3. Push the **Select** softkey to open the Auto mode menu.
4. Use ▽ and △ to highlight **Disable**, **HOLD**, or **HOLD+SAVE**.
5. Push the **Confirm** softkey.
6. Push the **Back** softkey to return to normal operation.

Set Auto Power Off Time

The Product has an auto power off function to save power. It enables or disables auto power off. It also allows users to set the time between last operation and auto power off.

To set the time for auto-power off:

1. Push SETUP to open the Setup menu.
2. Use ▼ and ▲ to highlight **General** and push the **Select** softkey.
3. Use ▼ and ▲ to highlight **Power off**, and push the **Select** softkey.
4. Use ▼ and ▲ to highlight **5 Minutes**, **15 Minutes**, **30 Minutes**, or **Never**.
5. Push the **Confirm** softkey.
6. Push the **Back** softkey to return to the **Setup** screen.

View Device Information

The Product provides the following device information: model number, serial number, version, analog board version, and calibration date.

To view the device information:

1. Push SETUP to open the Setup menu.
2. Use ▼ and ▲ to highlight **General**, and push the **Select** softkey.
3. Use ▼ and ▲ to highlight **Device info**., and push **View** softkey.

   The **Device info…** screen shows.
4. Push the **Back** softkey to return to the **Setup** screen.

Reset to Factory Mode

To reset the Product to factory mode:

1. Push SETUP to open the Setup menu.
2. Use ▼ and ▲ to highlight **General**, and push the **Select** softkey.
3. Use ▼ and ▲ to highlight **Factory mode**, and push the **Reset** softkey.
4. Push the **Confirm** softkey to reset the Product to factory mode.

Note

If the Product is reset to factory mode, all current measurement data will be lost.

View Memory Usage Information

To view memory usage information:

1. Push SETUP to open the Setup menu.
2. Use ▼ and ▲ to highlight **Memory info.**, and push the **Select** softkey.

   The screen shows the memory usage information in Meter mode and Sequence mode.

Chapter 3
Use the Product

Introduction

This chapter provides information about how to use the Product. The Product provides two modes for different measurement purposes: Meter mode and Sequence mode.

Meter mode lets you perform easy and fast measurements and save the measurement readings and timestamp to the Product memory. In this mode, the Product measures battery resistance and voltage, dc voltage, ac voltage, and ripple voltage.

Sequence mode is designed for professional battery maintenance personnel who work between multiple test sites. In this mode, you can create a profile for each battery string to be tested. The profile specifies information such as user-defined test site, device type, serial number, battery quantity, and battery model. During the test, all test data, including battery resistance, voltage, and ripple voltage is stored in the profile. After a battery string test is completed, you can create a new profile for the next battery string or test site. You can also recall or delete the test data in a history profile.

With the integrated profile management and the analysis software on the PC, you can analyze the trend of maintenance data and create reports in an efficient way. For example, you can create a comprehensive test and maintenance report for a test site or analyze the resistance changes of one battery string over time.

Switch Between Meter Mode and Sequence Mode

Each time you power on the Product, it is in Meter mode by default. **METER MODE** shows on the upper-left corner of the display.

To switch to Sequence mode:

1. Push METER Sequence.

   The Enter SEQUENCE mode? screen shows.

2. Push the **New**, **Continue**, or **Load** softkey and make other required selections to enter the measurement screen of Sequence mode.

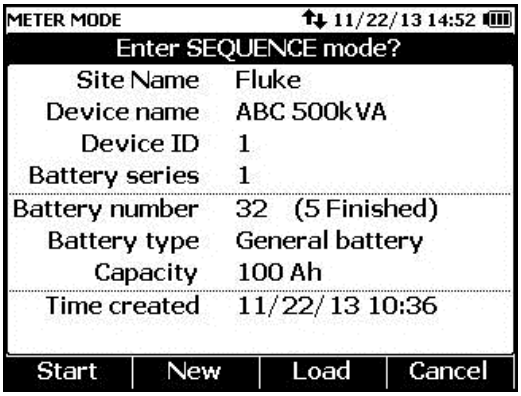

hpo001.jpg

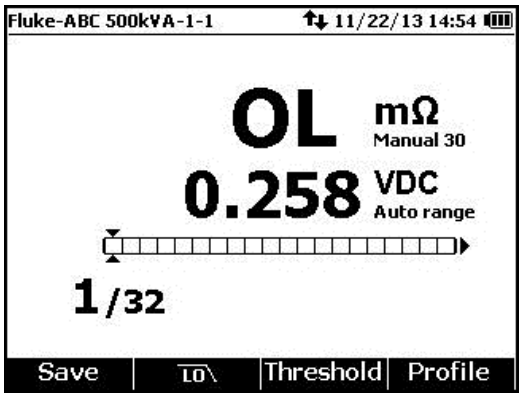

hpo002.jpg

To switch back to Meter mode:

1. Push METER Sequence.
2. When the Back to METER mode? screen shows, push the **Continue** softkey.

   The measurement screen of Meter mode shows.

Note

All measurements taken in Sequence mode will be saved to the memory.

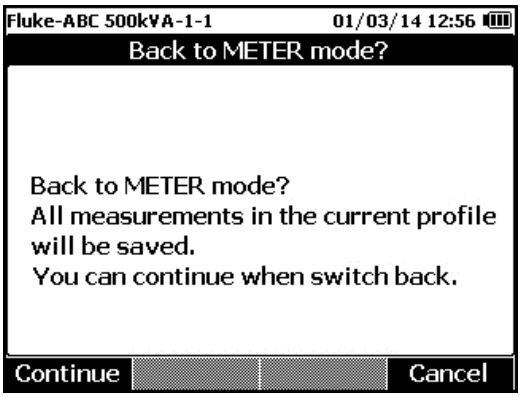

hpo003.jpg

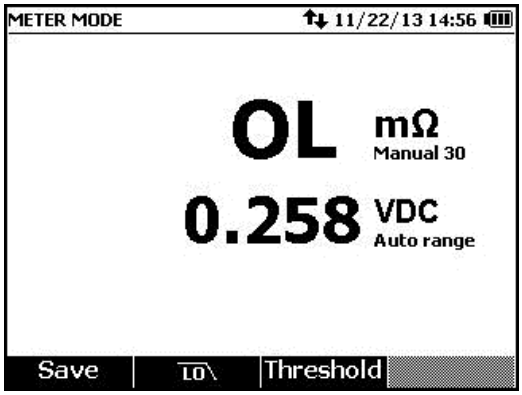

hpo005.jpg

Use a Profile in Sequence Mode

In Sequence mode, the Product lets you manage, categorize, and analyze data by profiles. The figure below shows a typical profile.

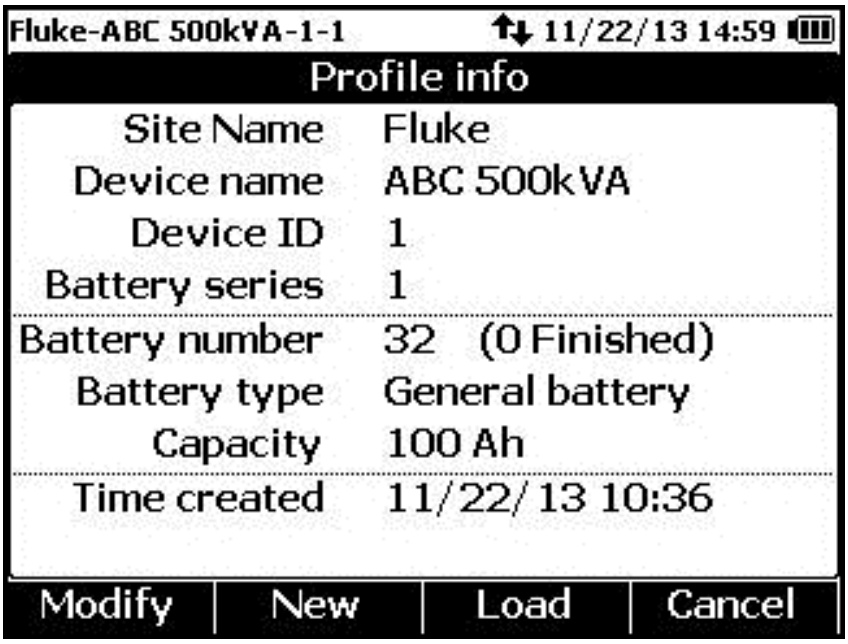

hpo006.jpg

Manage Profiles

Each Product stores up to 100 profiles. A profile describes the battery maintenance environment in a tree view.

For example:

- Site Name: Fluke
- Device name: ABC 500kVA
- Device ID: 1
- Battery series: 1

The PC software uses the same structure to categorize the profile.

It is recommended that you always use the same profile name for one battery string for better analysis. The profiles are distinguished by their timestamps.

Create a Profile

The Product provides these options to create a profile:

- **Create by default**: Uses system default data to create each profile.
- **String+1**: Copies data from the previous profile and increases 1 to the value of Battery string.

To create a profile in Sequence mode:

1. On the measurement screen of Sequence mode, push the **Profile** softkey.

   The Profile info menu shows on the screen.
2. Push the **New** softkey. The Select the Way to Create menu shows on the screen.

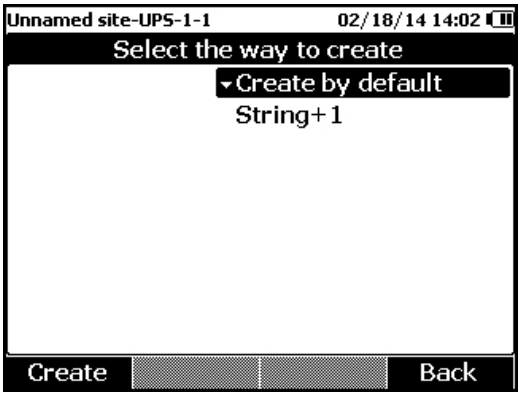

hpo004.jpg

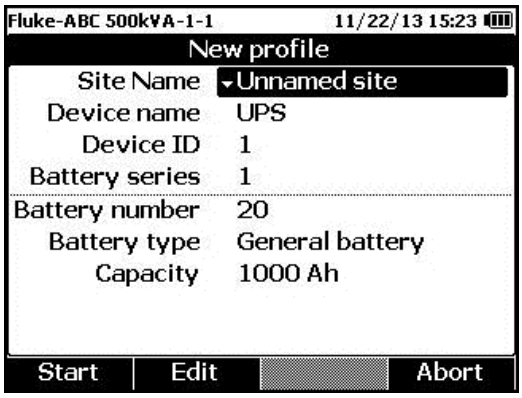

hpo012.jpg

3. Use ⊼ and ⊽ to select **Create by default** or **String+1**.
4. Push the **Create** softkey.

   The New Profile menu shows on the screen.
5. When necessary, push the **Edit** softkey, and then use the arrow keys and softkeys to edit the field values.
6. Push the **Done** softkey to exit the edit status.
7. Push the **Start** softkey to enter the measurement screen.

Note

- *Once a profile is created, the battery number cannot be changed. Other data values are editable.*
- *When the same battery string is tested periodically, it is recommended that the same profile name is used. In this way, test data can be archived and the data trend can be viewed easier.*
- *After test of one battery string is completed in a system, the String+1 function lets you easily switch to the next battery string without the need of repeated data input.*

Edit a Profile

In Sequence mode, profiles can be edited during creation or during measurement.

Edit a Profile During Creation

To edit a profile during creation:

1. On the New Profile menu, use ⊼ and ⊽ to highlight a data field to be edited.
2. Edit the data value.
   a. For **Device ID** and **Battery string**, use the **–** and **+**.softkeys to change the value.
   b. For other data fields, push the **Edit** softkey and use the arrow keys to change the data value. Use the **Select** softkey for each selection and the **Done** softkey to complete a data field.
3. Push the **Start** softkey to confirm the change and enter the measurement screen.

Modify a Profile During Measurement

To edit a profile during measurement:

1. Push the **Profile** softkey.

The Profile info screen shows.

2. Push the **Modify** softkey.

   The Edit profile screen shows.
3. Use ⊼ and ⊽ to highlight the data field to be edited.
4. Use the method in the “Edit a profile during creation” section to edit the profile.

Load a Profile

In Sequence mode, the Product can load a previously saved profile during measurement or when it is switched to Sequence mode.

Load a Profile When Switched to Sequence Mode

To load a profile when switched to Sequence mode:

1. On the Enter SEQUEUNCE mode? screen, push the **Load** softkey.
   The Load profile screen shows the list of history profiles in the Product memory.
2. Use ⊼ and ⊽ to highlight the number of the profile to be loaded.
3. Push the **View** softkey.
   Configurations of the selected profile show on the screen.
4. Push the **Continue** softkey to confirm loading the selected profile.

   Name of the loaded profile shows on the upper-left corner of the screen.

Make Measurements

Test Battery Resistance and Voltage

The Product can simultaneously test the resistance and voltage of a battery. This helps you to understand the overall state of the battery health.

To test battery resistance and voltage, turn the rotary switch to **mΩ**. See Figure 3-1.

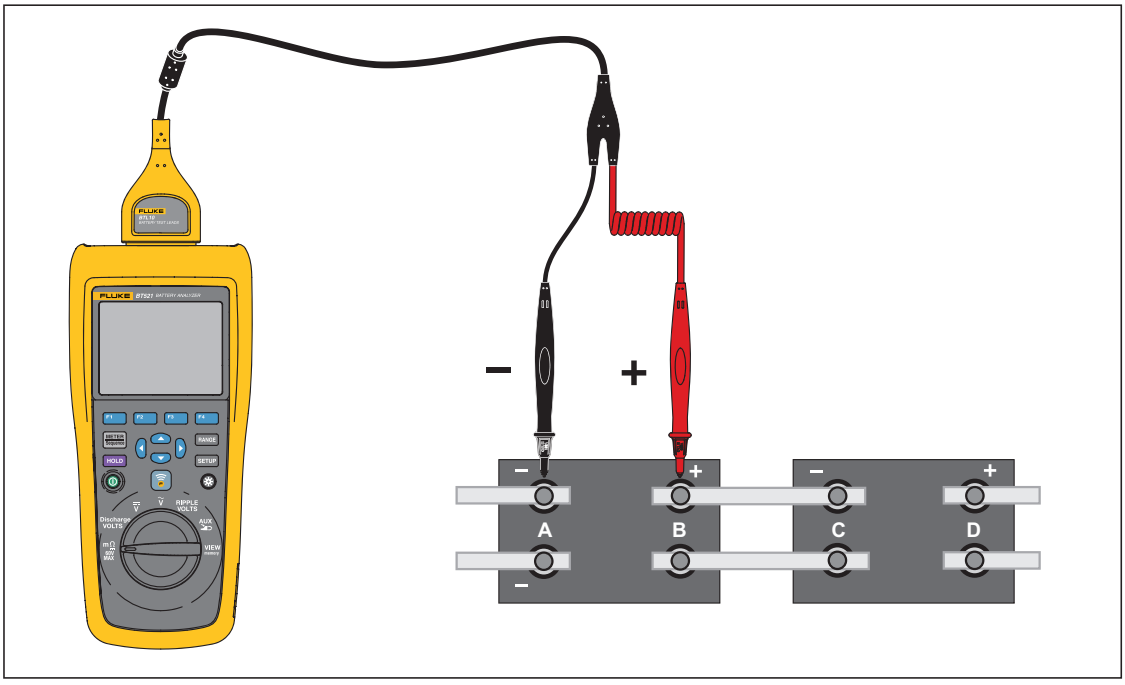

hsz018.eps

Figure 3-1. Test Battery Resistance and Voltage

Battery Test Probes

To connect test probes to the battery pole:

1. Use the inner tip of the test probe to touch the target surface.
2. Push the test lead to set-back the inner tip, until both the inner tip and the outer tip are fully connected to the target surface. This will ensure a proper 4-wire connection to the battery terminal.

Note

Stable and correct readings are shown only when both the inner tip and the outer tip of the test lead are fully connected to the target surface. See Figure 3-2.

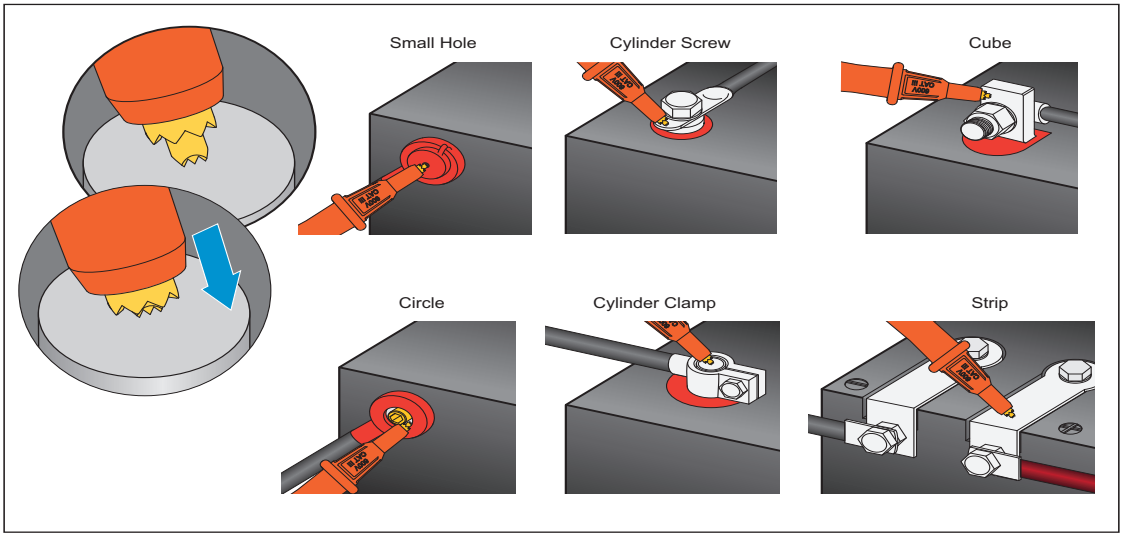

hpo008.eps

Figure 3-2. Connect Test Lead to Battery Pole

View Test Readings on the Screen

This is a typical display of battery test in Meter mode.

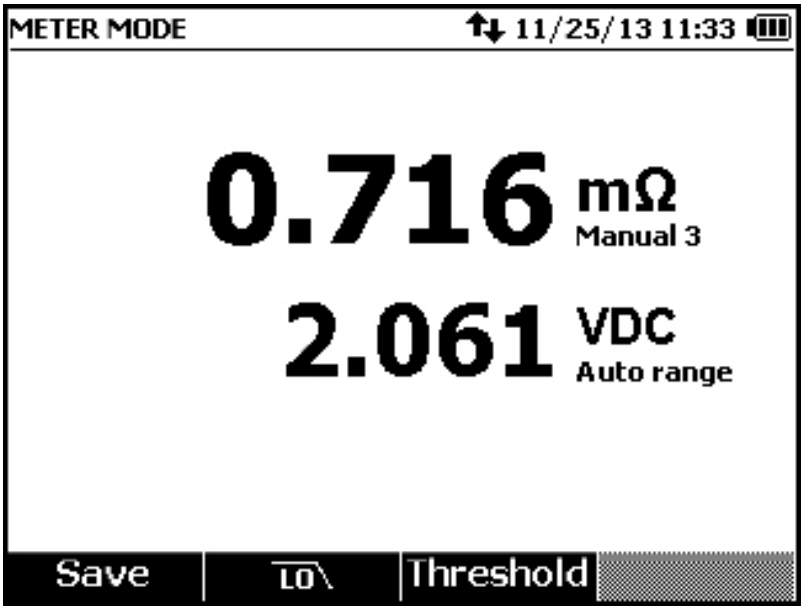

hpo028.jpg

This is a typical display of battery test in Sequence mode:

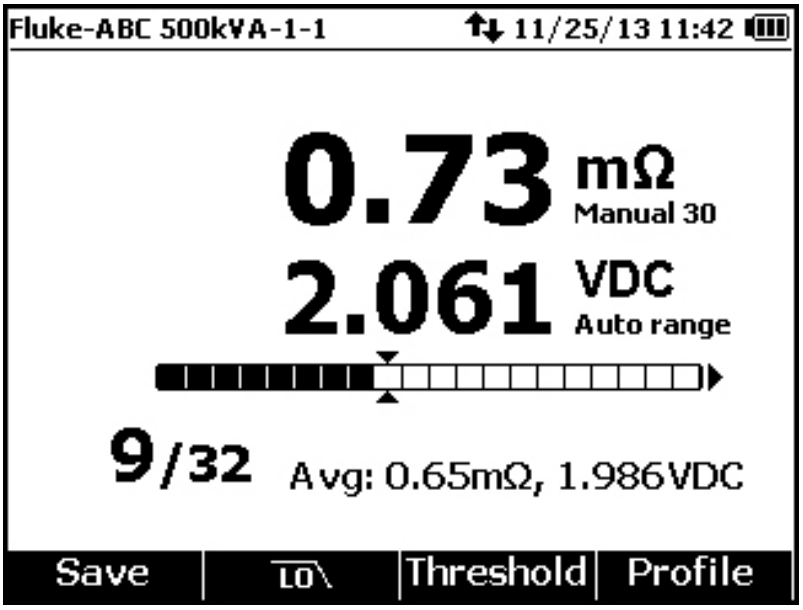

hpo031.jpg

Battery number: The number to the left of / indicates the number of the battery that is being tested. The number to the right of / indicates the total number of batteries in the profile.

Progress bar: The progress bar is generated according to the total number of batteries in the profile. Each cell corresponds to one battery. An empty cell indicates the corresponding battery is not tested yet. A full cell indicates the corresponding battery has been tested and the readings have been saved. A cross mark in a full cell indicates that the threshold function is enabled.

Cursors: When ▷ and ◁ are used to move the two cursors, the number of the currently tested battery changes accordingly. When the cursors are positioned on a full cell, the corresponding reading of that battery will be shown under the progress bar.

Average readings: After two or more sets of test readings are saved, the Product shows the average readings, including average resistance and average voltage.

Tip: If the test readings of a battery are significantly different from the average readings, it could indicate the battery health has been compromised.

Set Measurement Range

⚠Caution

Examine for open fuse before mΩ measurement by connecting the outer tips of both probes. If the mΩ reading changes from OL to dashes and then backs to OL, the fuse is good. mΩ reading remains as OL, the fuse is open and needs a replacement.

Battery resistance only has manual ranges. The default range for battery resistance measurement is 30 mΩ. You can push RANGE to cycle through different ranges in this sequence: 30 mΩ > 300 mΩ > 3000 mΩ > 3 mΩ.

Note

The battery voltage measurement is in auto ranging mode, and the range cannot be changed.

⚠Caution

In this function, the voltage between the positive and negative poles of a battery must be < 60 V. A voltage >60 V exceeds the rating of the fuse in the Product and causes an open circuit.

Save Battery Test Readings

In Meter mode, push the **Save** softkey to save the current resistance, voltage and time. All saved data is stored in chronological order.

In Sequence mode, push the **Save** softkey to save the current resistance and voltage readings. The current serial number increases by 1. The test progress bar moves to the right by one cell.

Erase Test Readings

To erase the test readings for a certain battery in Sequence mode:

1. Use ◀ and ▶ to point the cursors to the cell that corresponds to the correct battery.
2. Push the **Erase** softkey.

   The pointed cell becomes empty. Push the **Save** softkey to save new test readings for this battery.

Activate Low-Pass Filter for Resistance Measurement

Excessive high level of ac ripple voltage can have a negative impact on the battery resistance measurement. Use the built-in low pass filter to stabilize or reduce the impact of ac ripple on resistance measurements.

To activate the low-pass filter for battery resistance measurement, push the **LO** softkey. The display shows the **LO** icon.

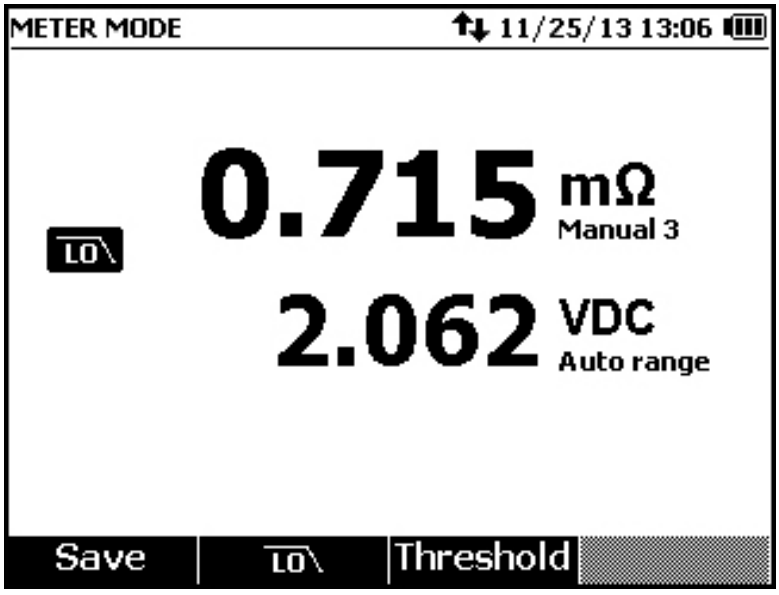

hpo032.jpg

Set Measurement Thresholds

The Product can define upper and lower measurement thresholds or tolerance ranges. These defined threshold values are then compared to the measured values to automatically identify and prompt the user with a **PASS**, **FAIL** or **WARN** indicator of battery out of tolerance conditions.

The threshold function is disabled by default. You can set up to 10 set of thresholds and select one threshold as needed.

To set and select measurement thresholds:

1. On the measurement screen, push the **Threshold** softkey to open the Select Threshold menu.
2. Use ◀ and ▶ to select one threshold set out of 10.

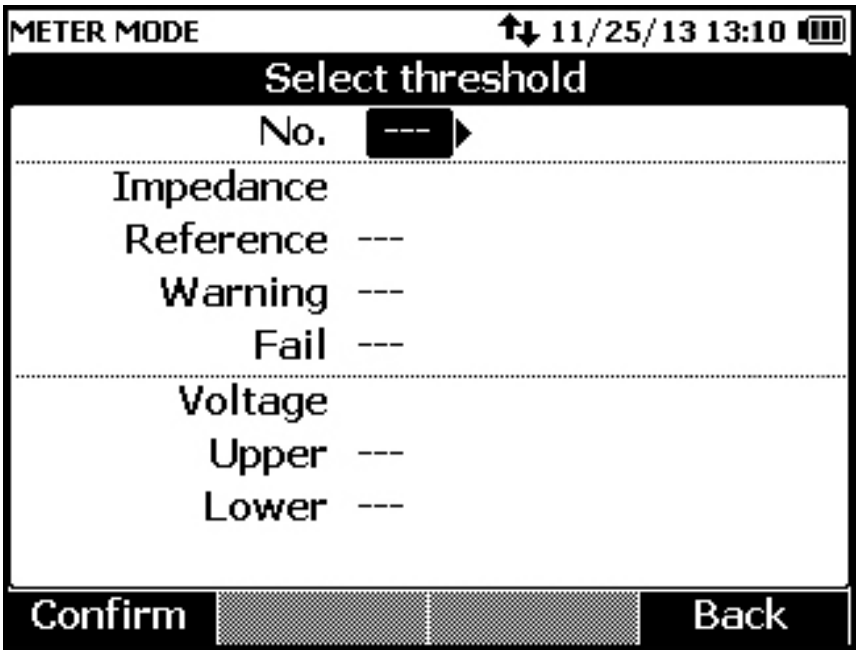

hpo033.jpg

3. Use ▲ and ▼ to highlight the value to be edited among **Voltage lower**, **Reference**, **Warning**, **Fail**, **Lower**, and **Notes**.
4. Edit the selected field.
   a. Use the **–** and **+** softkeys to change the values for **Warning** and **Fail**.
   b. For other fields, push the **Edit** softkey, use the arrow keys to edit the value, and then push the **Confirm** softkey to save the value.
5. Once all threshold values are correct, push the **Confirm** softkey on the save the threshold set.

The threshold set is applied and the **T:X** (X stands for value of **No**.) icon and the corresponding PASS/WARN/FAIL indication shows on the screen.

To disable measurement thresholds:

1. On the measurement screen, push the **Threshold** softkey to open the Select Threshold menu.

   The value of **No.** is already highlighted.

2. Use ◀ to set **No.** to **---**.
3. Push the **Confirm** softkey.

The **T-X** icon no longer shows on the display.

How the Thresholds Work

When a threshold set is applied, the Product compares each resistance reading with the resistance reference in the current threshold set.

- If the reading is greater than reference x (1+Fail threshold), the Product shows **FAIL** on the screen, indicating that the tested battery is potentially compromised and should be further investigated.
- If the reading is greater than Reference x (1 + Warning threshold) but less than Reference x (1 + Fail threshold), the Product shows **WARN** on the screen, indicating that the tested battery requires further attention and increase in test frequency.
- If the reading is less than Reference (1+ Warning threshold), the Product shows **PASS** on the screen, indicating that the tested battery is within the defined tolerance limits.

For example, you have applied a threshold set where Resistance Reference is set to 3.00 mΩ, Warning set to 20 %, and Fail set to 50 %. The Product shows **FAIL** for resistance readings greater than 3.00 x (1 + 50 %) = 4.50 mΩ. It shows **PASS** for resistance readings less than 3.00 x (1 + 20 %) = 3.60 mΩ. It shows **WARN** for resistance readings less than 4.50 mΩ but greater than 3.60 mΩ.

At the same time, the Product compares each stable voltage reading with the lower voltage from the applied threshold set. If the reading is less than the lower voltage threshold, the product shows FAIL on the display. If the reading is greater than the threshold, the product shows PASS on the display.

Note

If the resistance test and the voltage test have different results, the Product shows the worse result. For example, the resistance indicates PASS but the voltage indicates FAIL, the Product still shows FAIL on the display.

Measure DC Voltage

The Product can measure dc voltage. It also shows the polarity on the display.

To measure dc voltage, turn the rotary switch to $\overline{\underline{V}}$. See Figure 3-3 for connections.

hsz019.eps

Figure 3-3. Measure DC Voltage

Set Measurement Range

In this measurement mode, auto range is used by default. When the input signal reaches 110 % of the upper limit of the current range, the Product automatically increases a range. When the input signal reaches 90 % of the lower limit of the current range, the Product automatically decreases a range.

To manually set the range, push RANGE to cycle through 6 V, 60 V, 600 V, and 1000 V.

Save DC Voltage Readings

In Meter mode, push the **Save** softkey to save the current dc voltage reading and the timestamp. All saved data is stored in chorological order.

In Sequence mode, push the **Save** softkey to save the current dc voltage reading and the timestamp. The current battery number automatically increases by 1. The cell that corresponds to the tested battery becomes full, and the cursors move forward.

Note

Up to 20 dc voltage readings can be saved in one profile.

Measure AC Voltage

The Product supplies two independent readings to show the rms and frequency of ac voltage.

To measure ac voltage, turn the rotary switch to $\tilde{V}$. See Figure 3-4 for connections.

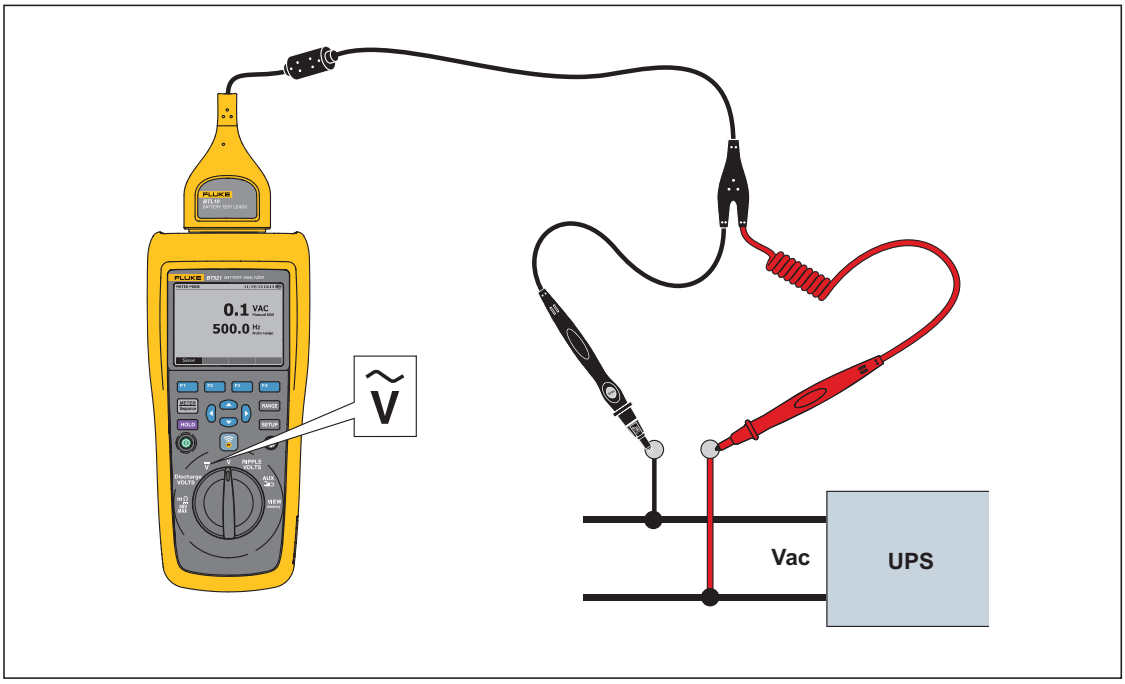

hsz021.eps

Figure 3-4. Measure AC Voltage

Measurement Range

The ac voltage measurement has only one range: 600 V. The frequency measurement uses auto ranging. This cannot be changed.

Save AC Voltage Readings

In Meter mode, push the **Save** softkey to save the current ac voltage reading and the timestamp. All saved data is stored in chorological order.

In Sequence mode, push the **Save** softkey to save the current ac voltage reading and the timestamp. The current battery number increases 1 automatically. The cell that corresponds to the tested battery becomes full, and the cursors move forward.

Note

Up to 20 ac voltage readings can be saved in one profile.

Measure Ripple Voltage

The Product can measure the ac component on a dc voltage, which is also known as ac ripple. A high ac ripple may result in a battery overheat and negatively impact the battery life. In addition, it may cause extra energy loss to the system.

To measure ripple voltage, turn the rotary switch to **RIPPLE VOLTS**.

Set Measurement Range

In ripple voltage function, both ac voltage and dc voltage use auto range by default.

To manually set the range for ac voltage, push RANGE to switch between 600 mV and 6000 mV.

The measurement of dc voltage uses auto range. This cannot be changed.

Save Ripple Voltage Readings

In Meter mode, push the **Save** softkey to save the current ripple voltage reading and the timestamp. All saved data is stored in chorological order.

In Sequence mode, push the **Save** softkey to save the current ripple voltage reading and the timestamp. The current battery number automatically increases by 1. The cell that corresponds to the tested battery becomes full, and the cursors move forward.

Note

Up to 20 ripple voltage readings can be saved in one profile.

Measure Discharge Voltage

In a typical battery load discharge test, you need to test the voltage of each battery in a battery string multiple times. In a typical load discharge test, the voltage of each battery is monitored from the start of the test when the batteries are at full capacity, until the voltage of any one battery while under constant load reaches a pre-defined minimum voltage level.

Make Measurements

To test discharge voltage:

1. Push METER Sequence as necessary to enter Sequence mode.
2. Turn the rotary switch to **Discharge VOLTS**.

Note

Discharge voltage can only be measured in Sequence mode.

Typical Display

This is a typical display of discharge voltage measurement.

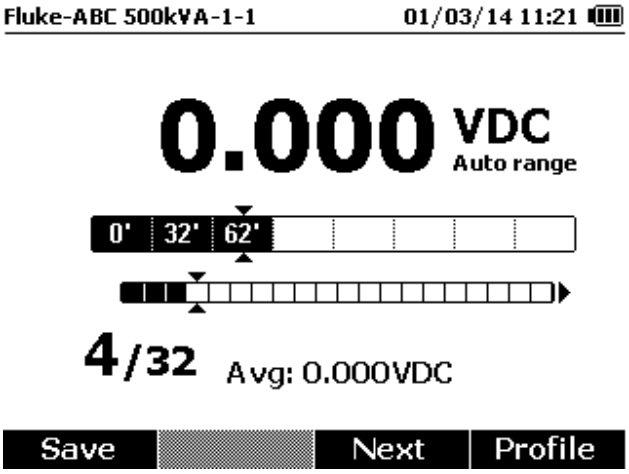

hpo052.jpg

Battery number: The number to the left of / indicates the number of the battery that is being tested. The number to the right of / indicates the total number of batteries in the profile.

Progress bars: The upper progress bar has eight cells. Each cell corresponds to one round of discharge voltage measurement. The Product can store up to eight sets of voltage test data as well as the intervals.

After one round of discharge voltage measurement is completed, this progress bar moves forward by one cell. The interval between this and the last round of measurement shows in this cell.

The lower progress bar is generated according to the total number of batteries in the profile. Each cell corresponds to one battery. An empty cell indicates the corresponding battery is not tested yet. A full cell indicates the corresponding battery has been tested and the readings have been saved.

Cursors: When you use ▷ and ◁ to move the two cursors, the number of currently tested battery changes accordingly. If the cursors are moved to a cell that corresponds to a battery with readings, the readings show under the progress bar.

Average readings: After you have saved two or more sets of test readings, the Product show the average readings, including average impedance and average voltage.

Chapter 4
Use the Handle and Probes

Introduction

This Product is shipped with an interactive handle. This chapter provides the information about how to use the interactive handle and the test probes.

BTL21 Overview

⚠⚠Warning

To prevent possible electrical shock, fire, or personal injury, hold the handle behind the tactile barrier (⑧).

Figure 4-1 shows the interactive handle. Table 4-2 describes the elements.

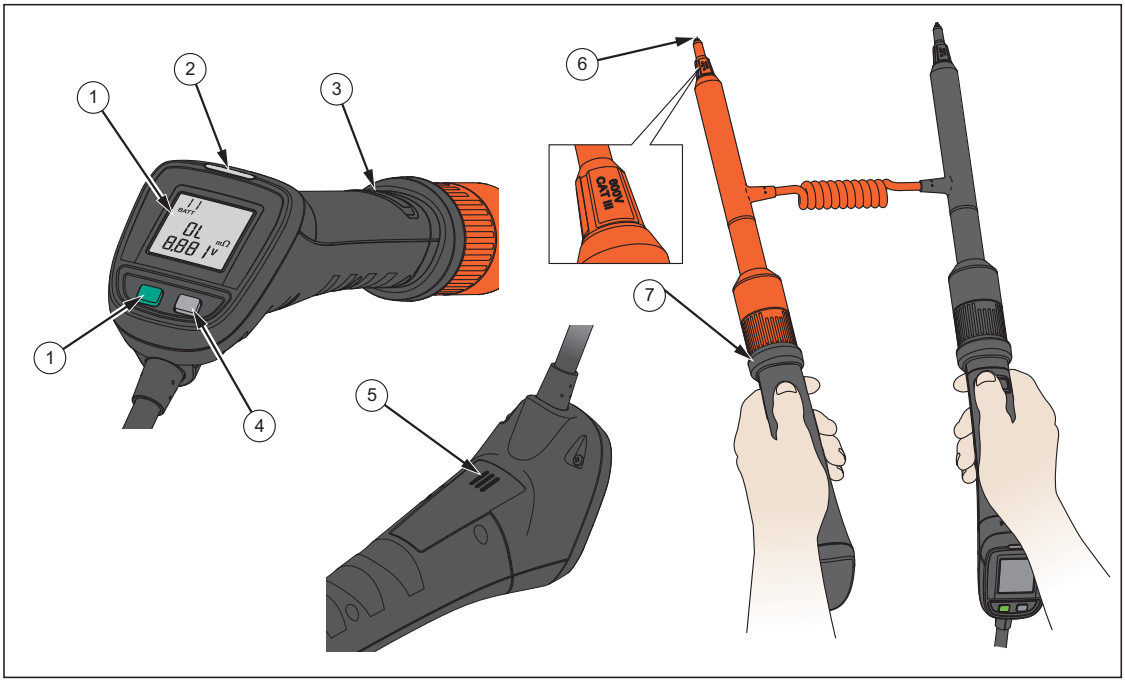

hsz022.eps

Figure 4-1. Interactive Handle

Table 4-1. Elements of the Handle

Item No.	Name	Function
①	Display	Shows information such as measurement readings.
②	LED	Indicates the status of a measurement. Green means Pass; orange means Warning; red means Fail.
③	Save button	Manually saves a measurement reading.
④	Power key	Turns on or turns off the handle.
⑤	Backlight key	Turns on or turns off the backlight for the handle.
⑥	Speaker	Plays audio reminders when enabled.
⑦	Probe tip	Connects the handle to the measured unit. The probe tips can be replaced.
⑧	Tactile barrier	Hold the handle behind the tactile barrier to prevent personal injury.

Connect the Probe to the Product

Before the handle and probes are used, connect the probe to the Product. See the section “Keys and I/O Terminals of the Product”.

Configure the Handle on the Product

Set the Handle Audio

The interactive handle has a speaker that can play audio reminders.

To set the handle audio:

1. Push SETUP to open the **Setup** screen.
2. Use ▼ to highlight **Handle**, and push the **Select** softkey.

   Audio is already highlighted.
3. Push the **Select** softkey.
4. Use ▲ and ▼ to highlight **Disable**, **Threshold result**, **Battery number**, or **Both**.
5. Push the **Confirm** softkey.
6. Push the **Back** softkey to return to the **Setup** screen.

Set Temperature Unit

To set the temperature unit for the handle:

1. Push SETUP to open the **Setup** screen.
2. Use ▼ to highlight **Handle**, and push the **Select** softkey.
3. Use ▼ to highlight **Temperature unit**, and push the **Select** softkey.
4. Use ▲ and ▼ to highlight **Celsius** or **Fahrenheit**, and push the **Confirm** softkey.
5. Push the **Back** softkey to return to the **Setup** screen.

Turn On/Off the Handle Power (BTL20/BTL21)

The interactive handle is powered by the Product.

The handle powers on when it is connected to the Product. Push the power key below the display to turn on or turn off the handle power.

When the handle is connected to the Product, the handle automatically turns on.

To conserve product battery power, push the power key below the handle display.

Note

When the handle power is off, temperature measurement is disabled (BTL21 only). Other measurement functions are not affected.

Understand the Handle Display

Table 4-1 describes the typical elements on the handle display.

Table 4-2. Typical Elements on the Handle Display

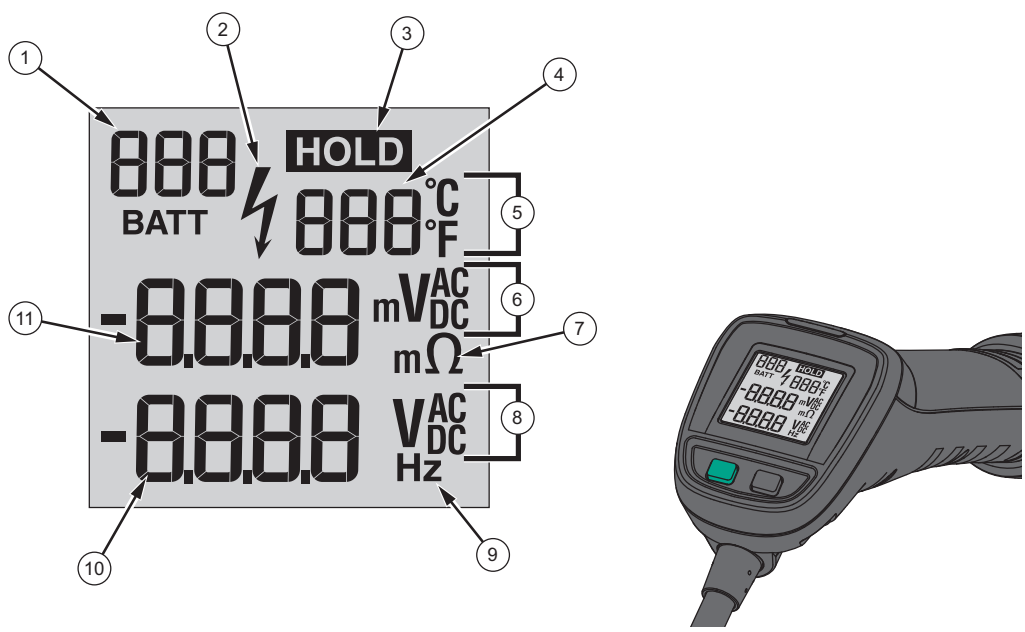

hsz027.eps

Item No.	Description	Item No.	Description
①	Battery ID(Sequence mode)	⑦	Unit of impedance
②	Hazardous voltage	⑧	V ac or V dc
③	AutoHold function is enabled.	⑨	Unit of frequency
④	Temperature reading	⑩	Voltage or frequency reading
⑤	Unit of temperature (Celsius or Fahrenheit)	⑪	Voltage or impedance reading
⑥	V ac, mV ac, or V dc		

Interchange Long and Short Probes

Figure 4-2 shows how to interchange the long and short probes.

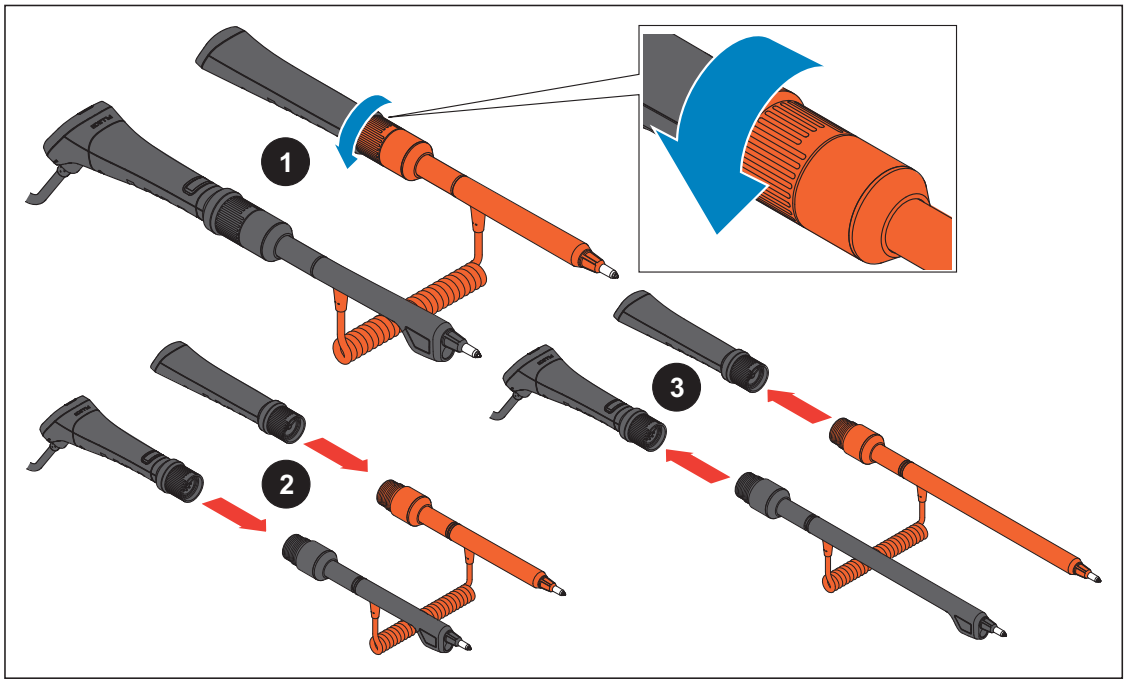

hsz024.eps

Figure 4-2. Interchange the Long and Short Probes

Note

To get accurate readings, the connectors between the handle and probes should be fully fastened.

Replace the Probe Tips

Figure 4-3 shows how to replace the probe tips.

⚠⚠ Warning

To prevent possible electrical shock, fire, or personal injury, use correct tip covers (CAT II or CAT III) in different CAT environments.

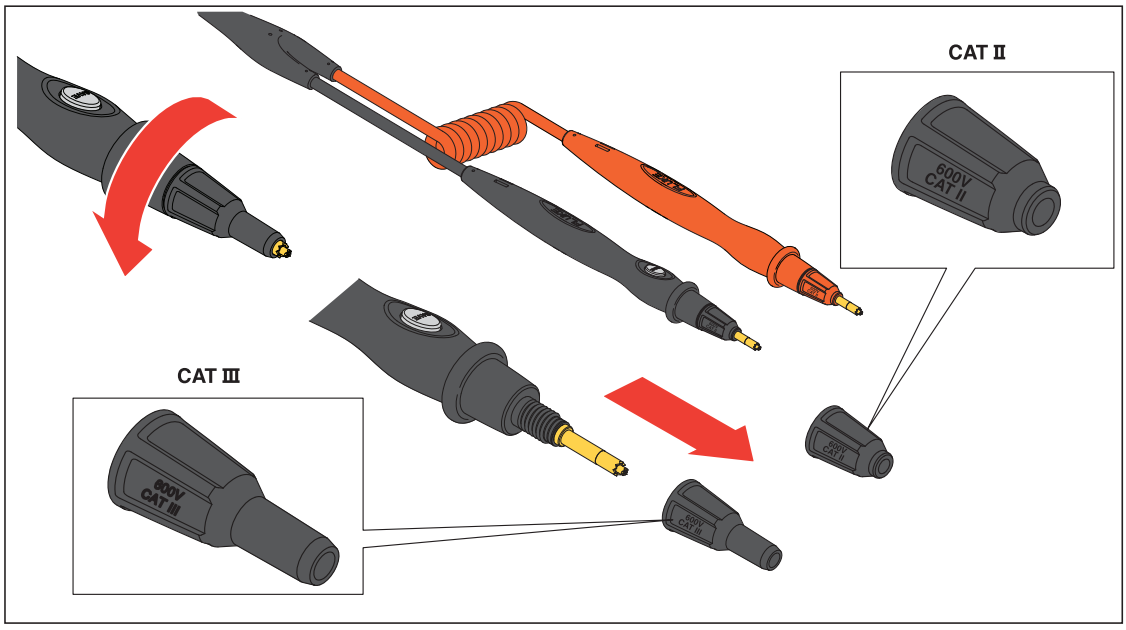

hsz026.eps

Figure 4-3. Replace the Probe Tips

Use the Attachable Torch

The handle is provided with an attachable torch accessory for illumination. The torch accessory uses two changeable 3-volt watch batteries and has a battery life of 10 hours.

Figure 4-4 shows how to attach the torch to the probe and how to turn on or turn off the torch.

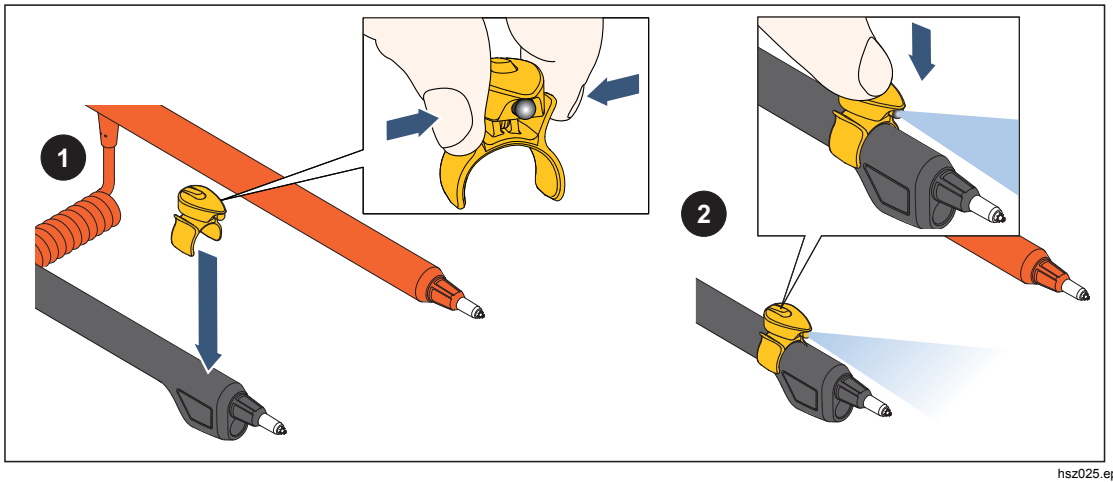

hsz025.eps

Figure 4-4. Attachable Torch

Zero Calibration

Each time before a probe is replaced, a zero calibration is required.

To do zero calibration:

1. Locate the zero calibration board on a flat surface horizontally.
2. Insert the red and black probe tips to the calibration holes.
3. Turn the rotary switch to **mΩ** and enter Meter mode. Then push F4 to enter zero calibration mode.
   The product starts zero calibration for all function ranges. After the zero calibration is completed, the Product beeps to indicate a success and automatically exits zero calibration mode.

Note

During zero calibration, make sure the inner and outer pins of the probe tips are fully connected to the calibration board.

Measure Temperature

The black probes (long and short) each has an IR temperature sensor at the tip. The IR temperature sensors can measure the temperature of battery poles (negative pole).

To measure the temperature of a battery pole:

1. Aim the IR sensor on the battery pole.
2. Adjust the emission angle (approximately 10 degrees) to let the flare cover the battery pole. See Figure 4-5.
   The temperature reading shows on the LCD of the handle.
3. Push the **Save** key on the handle.
   The temperature reading is saved the Product memory.

Figure 4-54-5 shows the emission angle for measurement of a battery pole.

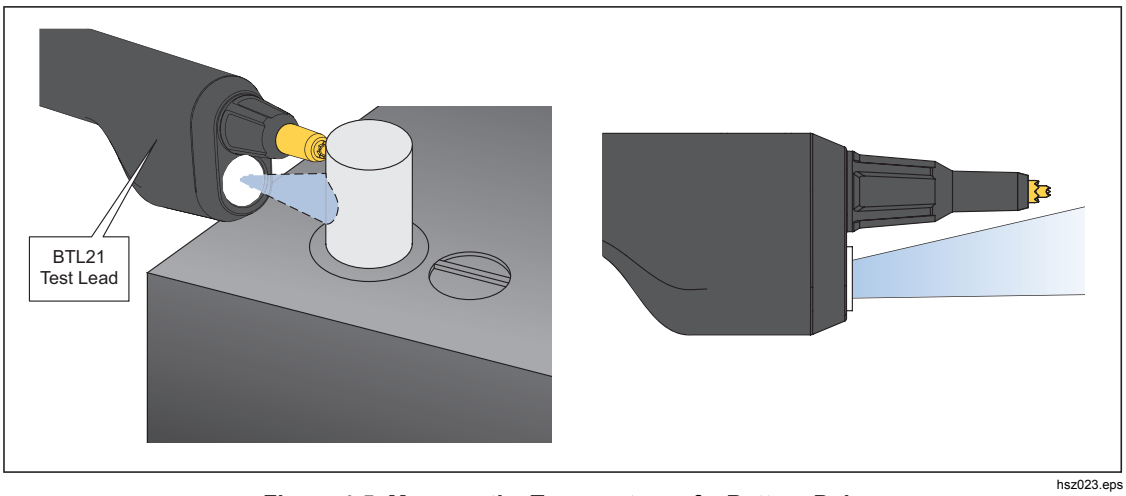

hsz023.eps

Figure 4-5. Measure the Temperature of a Battery Pole

Note

To set objective surface emissivity in accordance with battery post material, push Setup > Handle > Emissivity.

Chapter 5
View Memory

Introduction

This chapter provides information about how to view measurement data that is manually or automatically saved to the Product memory.

The Product has an internal memory that stores measurement data that can be viewed. Measurement data in Meter mode and Sequence mode shows separately.

View Data Saved in Meter Mode

To view measurement data that is saved in Meter mode:

1. Turn the rotary switch to **VIEW memory**.
2. Push METER Sequence until **MEMORY – METER MODE** shows on the upper left corner of the display.
3. View the memory items, and push the **Next** softkey to view next page as required.
4. Use F1 to cycle through these four data sets: **mΩ.V**, **VDC**, **VAC**, **Ripple**, and **AUX**.

Delete Data Saved in Meter Mode

To delete data saved in meter mode:

1. Turn the rotary switch to **VIEW memory**.
2. Push METER Sequence until **MEMORY – METER MODE** shows on the upper left corner of the display.
3. When the data to be deleted shows on the display, push the **More** softkey.
   a. To delete data entries one by one, use ⊼ and ⊽ to highlight a data entry, and then push the **Delete** softkey.

      When the display shows **Confirm to delete the reading?**, push the

      Delete softkey.

   b. To delete all data in the measurement set, push the **Delete all** softkey.

      When the display shows **Confirm to delete all readings?**, push the **Delete** softkey.

View Profiles Saved in Sequence Mode

To view measurement data that is saved in Sequence mode:

1. Turn the rotary switch to **VIEW memory**.
2. Push METER Sequence until **MEMORY – SEQUENCE MODE** shows on the upper left corner of the display.

   The Load profile menu shows on the display.
3. Use ⊼ and ⊼ to highlight a profile, and push the **View** softkey.
4. View the memory items, and push the **Next** softkey to view next page as required.
5. Use F1 to cycle through these four data sets: **mΩ.V, Dis.V**, **VDC**, **VAC**, **Ripple**, and **Aux**.

Delete Profiles Saved in Sequence Mode

To delete data saved in Sequence mode:

1. Turn the rotary switch to **VIEW memory**.
2. Push METER Sequence until **MEMORY – SEQUENCE MODE** shows on the upper left corner of the display.
3. When the **View profile** menu shows on the display, use ⊼ and ⊽ to highlight a profile, and push the **More** softkey.
   a. To delete only the highlighted profile, push the **Delete** softkey.

      When the display shows **Confirm to delete current profile?**, push the **Delete** softkey.
   b. To delete all profiles, push the **Delete all** softkey.

      When the display shows **Confirm to delete all profiles?**, push the **Delete** softkey.

Chapter 6
Connection to PC or Mobile Device

Introduction

This chapter contains information about how to connect the Product to a PC or mobile device.

Connect the Product to PC

The Product has a USB port that lets you connect the Product to a PC through a USB cable. The USB port is located at the lower right side of the Product, as shown in Figure 2-1.

When connected to a PC, the PC Application can:

- View data from Product memory
- Export data from Product memory
- Import data to Product memory
- Delete data from the Product memory

Note

Please refer to PC Application help file for how to use the application.

Connect the product to Mobile device

You can connect the product with mobile device (iPhone, iPad) through Bluetooth.

When connected to a mobile device, the Mobile Apps can:

- View profile and associated data
- Send emails with profiles and associated data as .csv files

Note

To check FCC manual about the Support mobile device with BLE (Bluetooth Low Energy)

Chapter 7
Maintenance

Introduction

This chapter covers basic maintenance procedures.

⚠⚠Warning

For safe operation and maintenance of the Product:

- **Use only specified replacement parts.**
- **Use only specified replacement fuses.**
- **Have an approved technician repair the Product.**
- **The battery door must be closed and locked before you operate the Product.**
- **Batteries contain hazardous chemicals that can cause burns or explode. If exposure to chemicals occurs, clean with water and get medical aid.**
- **Remove the input signals before you clean the Product.**
- **Do not disassemble or crush battery cells and battery packs.**
- **Do not put battery cells and battery packs near heat or fire. Do not put in sunlight.**
- **A low battery indication on display may prevent the Product from taking a measurement.**
- **Keep the battery pack out of the reach of children and animals.**
- **Do not subject battery packs to severe impacts such as mechanical shock.**
- **Do not use any charger other than that specifically provided for use with the Product.**
- **Do not use any battery which is not designed or recommended by Fluke for use with the Product.**
- **Remove all probes, test leads, and accessories before the battery door is opened.**
- **Repair the Product before use if the battery leaks.**

- **Remove the batteries if the Product is not used for an extended period of time, or if stored in temperatures that exceed the specification of the battery manufacturer. If the batteries are not removed, battery leakage can damage the Product.**
- **Connect the battery charger to the mains power outlet before the Product.**
- **Use only Fluke approved power adapters to charge the battery.**
- **Keep cells and battery packs clean and dry. Clean dirty connectors with a dry, clean cloth.**
- **Do not keep cells or batteries in a container where the terminals can be shorted.**
- **Ensure fuse continuity. If the protective fuse opens, the mΩ function will display 'OL' with all probe tip conductors short circuited.**
- **Replace a blown fuse with exact replacement only for continued protection against arc flash.**
- **After extended periods of storage, it may be necessary to charge and discharge the battery packs several times to obtain maximum performance.**

Install or Replace the Battery Pack

⚠⚠Warning

Never operate the Product with the Battery Cover removed. Hazardous voltage exposure may occur.

To install or replace a Battery Pack:

1. Make sure the Product is off.
2. Remove all probes and/or test leads.
3. Unlock the battery cover at the rear of the Product. Turn the screw a quarter turn counter clockwise.
4. Install the battery pack.
5. Put the battery cover back on the unit.
6. Tighten the screw.

Figure 7-1 shows how to install or replace a battery pack.

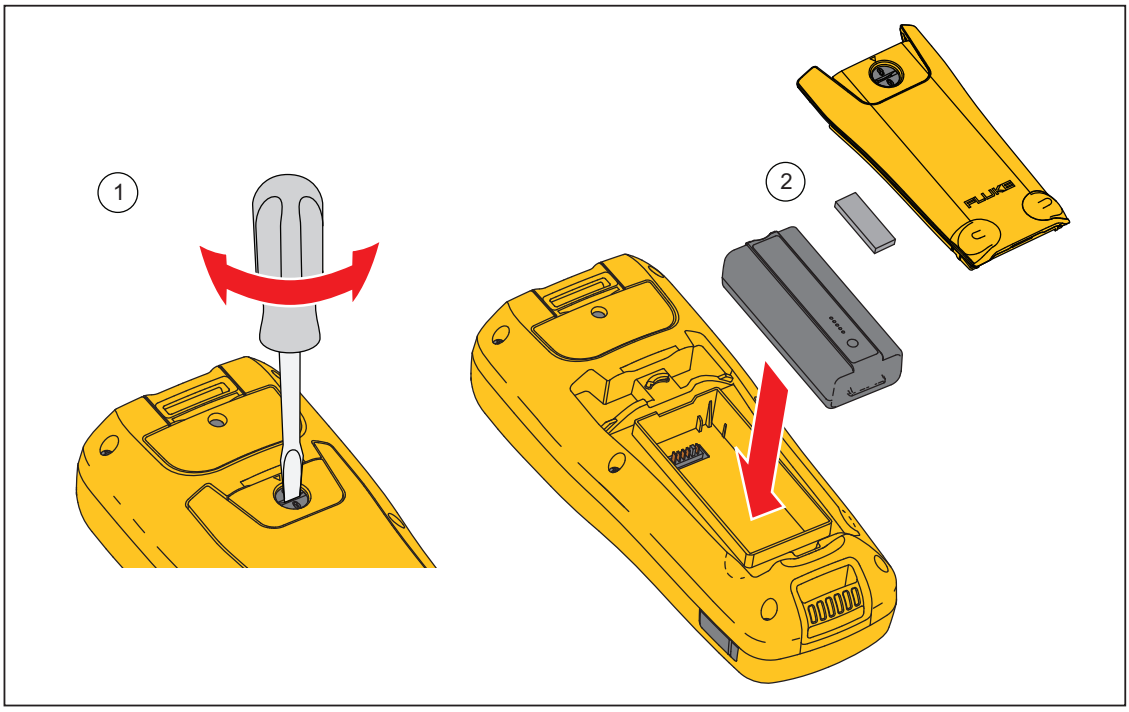

hpo005.eps

Figure 7-1. Install or Replace a Battery Pack

Replace the Fuse

⚠⚠Warning

To prevent possible electrical shock, fire, or personal injury:

- **Use only specified replacement fuses.**
- **Replace a blown fuse with exact replacement only for continued protection against arc flash.**

To replace the fuse:

1. Make sure the Product is off and any test leads are disconnected.
2. Install the new fuse.
3. Use a screwdriver to loosen the captive screw on the fuse cover at the upper end of the Product.
4. Install the new fuse.
5. Reinstall the fuse cover.
6. Tighten the fuse cover screw.

See Figure 7-2.

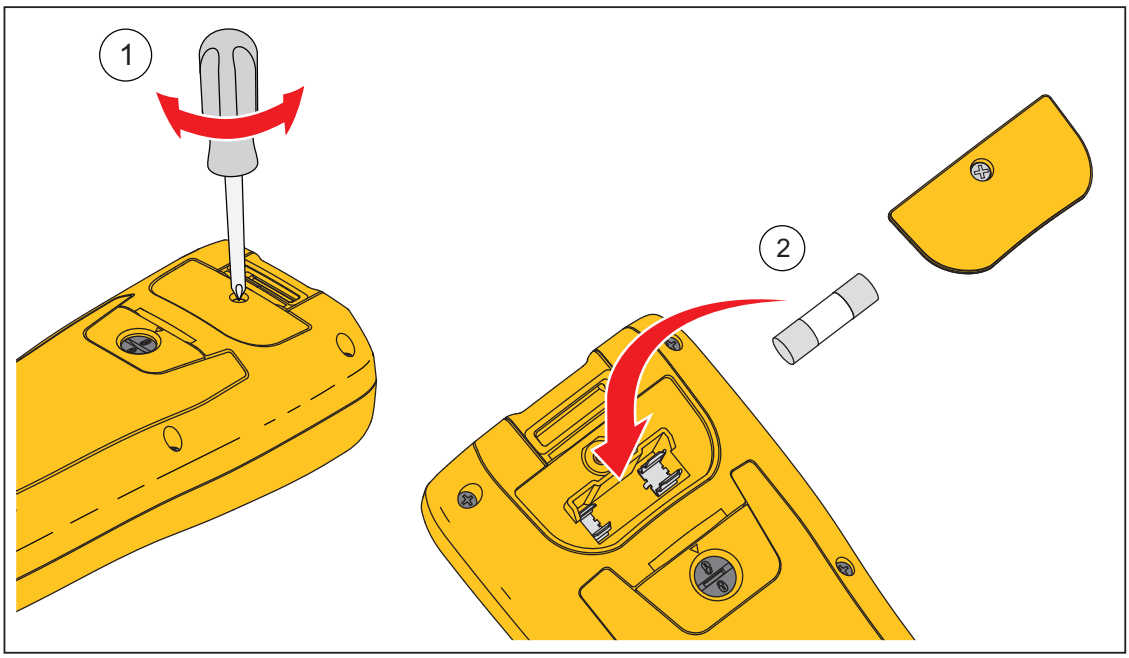

hpo006.eps

Figure 7-2. Replace the Fuse

Clean the Product

⚠⚠Warning

For safe operation and maintenance of the Product, disconnect the Product and its accessories from all voltage sources during cleaning.

Clean the Product with a damp cloth and a mild soap. Do not use abrasives, solvents, or alcohol. These may damage the Product markings and labels.

Charge the Battery

When the Product is powered by the battery, the battery charge symbol in the screen header informs you about the charge condition. This symbol ranges from fully charged to empty.

The % increments are:

- Empty: 5 % - 20 %
- 1 cell: 20 % - 50 %
- 2 cells: 50 % - 70 %
- 3 cells: 70 % - 100 %

To keep the battery in optimal condition, it must discharge fully and then charge it. A full charge takes approximately 3 hours with the Product turned off. Repeat this at least twice a year.

Figure 7-3 shows how to charge the battery.

Parts and Accessories

Table 7-1 lists the user-replaceable parts and accessories. To order replacement parts or additional accessories, contact your nearest Fluke Service Center. See the “Contact Fluke” section.

Table 7-1. Parts and Accessories

Item	Quantity	Fluke Part Number
Fuse	1	943121
BP500, LITHUM-ION, battery pack	1	4398817
BC500, 18V DC battery charger	1	4459488
BTL10	1	4500803
BTL Adapter	1	4490325
Current Clamp i410	1	617727
USB cable	1	4499448
Zero calibration board	1	4497419
Torch	2	4463544
Probe tips, Kelvin, 3.9mmx36.5mm	2	4408615
BTL21 - Interactive handle	1	4486216
BTL21 - Dummy handle	1	4486421
BTL21 - long probe	1	4486442
BTL21 - short probe	1	4486439
BTLXX CAP,CAT III,LONG,BLACK	1	4397081
BTLXX CAP,CAT III,LONG,RED	1	4397096
BTLXX CAP,CAT II,SHORT,BLACK	1	4397107
BTLXX CAP,CAT II,SHORT,RED	1	4397118
Fuse DOOR	1	4345750
BATTERY DOOR	1	4345745

"Este produto está homologado pela ANATEL, de acordo com os procedimentos regulamentados pela Resolução 242/2000, e atende aos requisitos técnicos aplicados"

Para maiores informações, consulte o site da ANATEL www.anatel.gov.br

Modelo: BT521

ANATEL

Agência Nacional de Telecomunicações

2395-14-5988

(01)07898941652081

" Este equipamento opera em caráter secundário, isto é, não tem direito a proteção contra interferência prejudicial, mesmo de estações do mesmo tipo, e não pode causar interferência a sistemas operando em caráter primário."