erco&gener

L'esprit Modem

User Guide

GenLoc 354e

Reference : EG_GenLoc354e_1040Q_UG_002_UK

Revision : 002

Date : 13/07/2016

Document History

Rev.	Modifications	Author	Date	Validation	Date
000	Creation	YST	01/07/2015	PBR	06/07/2015
001	Minor adjustment on DoC	EFO	02/11/2015	PBR	03/11/2015
002	Update DoC	YST	13/07/2016	MSU	13/07/2016

The main modifications of this document compared to the previous version are easily identifiable on the screen by the blue color of the text.

Descriptions and non-contractual illustrations in this document are given as an indication only.
ERCOGENER reserves the right to make any modifications.

TABLE OF CONTENTS

PRESENTATION 10
WARNING 11
COPYRIGHT 12
SYMBOLS USED 13
1 SECURITY RECOMMENDATIONS 14
1.1 GENERAL SECURITY 14
1.2 SECURITY IN A VEHICLE 15
1.3 CARE AND MAINTENANCE 15
1.4 YOUR RESPONSIBILITY 15
2 PRESENTATION 16
2.1 CONTENT 16
2.2 MODEM PACKAGING 16
2.3 MECHANICAL CHARACTERISTICS 17
2.3.1 Fixing brackets 17
2.4 CHARACTERISTICS AND SERVICES 18
2.4.1 Services 18
2.5 ENVIRONMENTAL CHARACTERISTICS 21
3 INTERFACES 22
3.1 FRONT SIDE 22
3.2 BACK SIDE 23
3.3 FUNCTIONAL ARCHITECTURE 24
3.4 POWER SUPPLY 25
3.4.1 Power supply cables 25
3.4.2 Power supply 8 – 32V_{DC} 25
3.4.2.1 Internal battery 26
3.4.2.2 Consumption of the GenLoc 354e 27
3.4.2.3 Power Dimensioning 28
3.5 ONE WIRE BUS 29
3.5.1 One Wire Bus 29
3.5.2 Option Multi 1- Wire Bus S0470C 30
3.6 ANALOG INPUTS ANA1 AND ANA2 31
3.6.1 Analog inputs 0 – 10 V_{DC} 31
3.6.2 Option analog inputs 4 – 20 mA S0475C 32
3.7 OPTO-COUPLED INPUTS 33
3.8 ISOLATED OPTO-COUPLED INPUTS 34
3.9 DIGITAL OUTPUTS 35

Descriptions and non-contractual illustrations in this document are given as an indication only.
ERCOGENER reserves the right to make any modifications.

3.10 POWER SUPPLY OUTPUT V_{BAT} ... 36
3.11 BUZZER ... 37
3.12 INPUT COMPATIBLE K-LINE (ISO 9141-2) ... 38
3.13 SERIAL LINK RS232_0 ... 39
3.14 SERIAL LINK RS232_1 ... 40
3.15 SERIAL LINK RS232_2 / BUS CAN OPTION ... 41
3.15.1 Serial link RS232_2 option S0469B ... 41
3.15.2 Bus CAN MCP2515 option S0467D ... 42
3.16 POWER SUPPLY POWER_OUT ... 43
3.17 BOOT ... 44
3.18 RESET ... 45
3.19 ACCELEROMETER ... 46
3.20 SIM CARD ... 46
3.21 DUAL SIM OPTION – S0471C ... 46
3.22 LEDS OF THE MODEM ... 47
3.22.1 GSM Led ... 47
3.22.1.1 Without application ... 47
3.22.1.2 With standard library EGM ... 47
3.22.1.3 The application ERCOGENER EaseLoc_Vx ... 47
3.22.1.4 Owner application ... 47
3.22.2 User Led ... 48
3.22.3 GNSS Led ... 48
4 GSM EXTERNAL ANTENNA ... 49
5 GNSS EXTERNAL ANTENNA ... 50
5.1 INSTALLATION OF GNSS EXTERNAL ANTENNA ... 51
6 USE OF THE MODEM ... 52
6.1 SPECIFIC RECOMMENDATIONS FOR THE USE OF THE MODEM IN VEHICLES ... 52
6.1.1 Recommended connection on the battery of a truck ... 52
6.2 TURNING THE MODEM OFF ... 53
6.3 STARTING WITH THE MODEM ... 54
6.3.1 Mounting the modem ... 54
6.3.2 SIM card installation ... 54
6.4 USE OF THE MODEM ... 55
6.4.1 Checking the communication with the modem ... 55
6.4.1.1 Without application ... 55
6.4.1.2 Standard Library ... 56
6.4.1.3 The application ERCOGENER EaseLoc_Vx ... 56
6.4.1.4 The owner application ... 57
6.5 CHECKING THE QUALITY OF THE GSM RECEPTION SIGNAL ... 57
6.6 VERIFICATION OF THE PIN CODE ... 58
6.7 VERIFICATION OF THE MODEM REGISTRATION ON GSM NETWORK ... 58

Descriptions and non-contractual illustrations in this document are given as an indication only.
ERCOGENER reserves the right to make any modifications.

6.8 VERIFICATION OF THE MODEM REGISTRATION ON GPRS NETWORK 59
6.9 READING A CURRENT POSITION GIVEN BY THE GNSS 60

7 RECOMMENDED ACCESSORIES 62

8 CLIENT SUPPORT 62

ANNEX 1 – 4-PINS MICRO-FIT CABLE (4 WIRES, POWER SUPPLY) 63

ANNEX 2 - 14-PINS MICRO-FIT CABLE (INPUTS/OUTPUTS) 64

ANNEX 3 – 16-PINS MICRO-FIT CABLE (14 WIRES, SERIAL LINKS) 65

ANNEX 4 – 16-PINS MICRO-FIT CABLE (16 WIRES, SERIAL LINKS, BOOT AND RESET) 66

ANNEX 5 - ABBREVIATIONS 67

DECLARATION OF CONFORMITY 69

Descriptions and non-contractual illustrations in this document are given as an indication only.
ERCOGENER reserves the right to make any modifications.

Index of Tables

Table 1 : Mechanical characteristics 17
Table 2 : Characteristics and services 18
Table 3: Environmental characteristics 21
Table 4 : Front side connection 22
Table 5 : Effects of power supply defect 25
Table 6 : Characteristics of the polymer lithium battery 26
Table 7 : Power supply range 27
Table 8: Consumption in Low Power mode @ 25 °C without battery charging 27
Table 9 : Consumption in attached mode @ 25 °C without battery charging 27
Table 10 : Consumption in data transfer @ 25 °C without battery charging 27
Table 11 : Consumption in data transfer @ 25 °C without battery charging 28
Table 12: Consumption of the battery charge @ 25 °C 28
Table 13: One Wire Bus description 29
Table 14 : One Wire Bus – Electrical characteristics 29
Table 15 : Multi 1- Wire Bus description S0470C 30
Table 16 : Multi 1- Wire Bus – Electrical characteristics S0470C 30
Table 17 : Description of analog inputs 0 – 10 V 31
Table 18 : Characteristics of analog inputs 0 – 10 V 31
Table 19 : Description of analog inputs 4 – 20 mA 32
Table 20 : Characteristics of analog inputs 4 – 20 mA 32
Table 21 : Description of opto-coupled inputs 33
Table 22 : Characteristics of opto-coupled inputs 33
Table 23 : Description of isolated opto-coupled inputs 34
Table 24 : Characteristics of isolated opto-coupled inputs 34
Table 25 : Description of digital outputs 35
Table 26 : Characteristics of open collector output 35
Table 27 : Description of the power supply V_{BAT} 36
Table 28 : Conditions of use of the power supply output V_{BAT} 36
Table 29 : Description of buzzer output 37
Table 30 : Characteristics of buzzer output 37
Table 31 : Example of Transducer tested with the GenLoc 354e 37
Table 32 : Description of the input compatible K-Line (ISO 9141-2) 38
Table 33 : Bus K-Line for a tachograph 38
Table 34 : Pins description of serial link RS232_0 39
Table 35 : Characteristics of serial link RS232_0 39
Table 36 : Pins description of serial link RS232_1 40
Table 37 : Characteristics of serial link RS232_1 40
Table 38 : Pins description of serial link RS232_2 41
Table 39 : Characteristics of serial link RS232_2 41
Table 40 : Pins description of the link Bus CAN option S0467D 42

Descriptions and non-contractual illustrations in this document are given as an indication only.
ERCOGENER reserves the right to make any modifications.

Table 41 : Characteristics of serial link Bus CAN MCP2515 option S0467D 42
Table 42 : Description of Power_Out 43
Table 43 : Characteristics of Power_Out 43
Table 44 : Description of BOOT input 44
Table 45 : Conditions of use of BOOT signal 44
Table 46 : Description of RESET input 45
Table 47 : Conditions of use of RESET signal 45
Table 48: Characteristic of accelerometer 46
Table 49: Characteristics of the SIM card power voltage 46
Table 50: Characteristics of the 2nd SIM card power voltage 46
Table 51: Status of GSM LED 47
Table 52: Available status of GNSS LED 48
Table 53 : Characteristics of GSM external antenna 49
Table 54 : Characteristics of GNSS external antenna 50
Table 55 : RSSI value 57
Table 56 : Verification of PIN code 58
Table 57 : Verification of modem registration on GSM network 58
Table 58 : Verification of the modem registration on GPRS network 59
Table 59 : Reading a current position given by the GNSS 61
Table 60 : Characteristics of power supply cable 63
Table 61 : Characteristics of 14-wire inputs/outputs cable 64
Table 62 : Wiring of the 14-wire inputs/outputs cable 64
Table 63 : Characteristics of 14-wires serial links cable 65
Table 64 : Wiring of 14-wires serial links cable 65
Table 65 : Characteristics of the 16-wires serial links cable (Boot + Reset) 66
Table 66 : Wiring of the 16-wires serial links cable (Boot + Reset) 66

Descriptions and non-contractual illustrations in this document are given as an indication only.
ERCOGENER reserves the right to make any modifications.

Index of Figures

Figure 1 : Content 16
Figure 2 : Dimensions 17
Figure 3 : Back side 17
Figure 4 : Front side 22
Figure 5 : Back side 23
Figure 6 : Functional architecture 24
Figure 7 : Consumption max 28
Figure 8 : Internal electrical scheme of the One Wire bus 29
Figure 9 : Internal electrical scheme of the Multi 1- Wire Bus S0470C 30
Figure 10 : Internal electrical scheme of analog input 0 – 10 V 31
Figure 11 : Internal electrical scheme of analog input 4 – 20 mA 32
Figure 12 : Internal electrical scheme of opto-coupled inputs 33
Figure 13 : Internal electrical scheme of isolated inputs 34
Figure 14 : Internal electrical scheme of the output 35
Figure 15 : Example of relay control 35
Figure 16 : Example of Transducer tested with the GenLoc 354e 37
Figure 17 : Internal electrical scheme of the K-Line bus for a tachograph 38
Figure 18 : Level of K-Line bus for a tachograph 38
Figure 19 : Scheme for connection of K-Line input to tachograph 38
Figure 20 : Standards signals of serial link RS232_0 39
Figure 21 : Standards signals of serial link RS232_1 40
Figure 22 : Standards signals of serial link RS232_2 41
Figure 23 : Output signal of bus CAN MCP2515 option S0467D 42
Figure 24 : Standards signals of link Bus CAN MCP2515 option S0467D 42
Figure 25 : Internal electrical scheme of Power_Out 43
Figure 26 : Drop of voltage 43
Figure 27 : Internal electrical scheme of BOOT 44
Figure 28 : Internal electrical scheme of RESET 45
Figure 29 : Chronogram of RESET signal 45
Figure 30 : Positioning of the accelerometer axis 46
Figure 31 : Back side Leds 47
Figure 32 : GSM external antenna 49
Figure 33 : GNSS external antenna 50
Figure 34 : Recommended installation of GNSS antenna 51
Figure 35 : Installation of GNSS antenna not recommended 51
Figure 36 : Recommended connection on the battery of a truck 52
Figure 37 : Mounting the modem 54
Figure 38 : Installation of the modem 54
Figure 39 : 4-pins Micro-FIT cable 63
Figure 40 : Fuse Mini Blade 63

Descriptions and non-contractual illustrations in this document are given as an indication only.
ERCOGENER reserves the right to make any modifications.

Figure 41 : 14-pin Micro-FIT cable (Inputs/Outputs) 64
Figure 42 : 16-pins Micro-FIT cable (Serial links)..... 65
Figure 43 : 16-wire Micro-FIT cable (Serial links, Boot and Reset)..... 66

Descriptions and non-contractual illustrations in this document are given as an indication only.
ERCOGENER reserves the right to make any modifications.

Presentation

Entirely dedicated to geolocation and embedded data services, the modem GenLoc 354e combines the GSM / GPRS / HSPA and GNSS functions in the same robust casing.

The GNSS data can be transmitted by SMS or data communication GSM/GPRS/HSPA.

This product includes the 72-channel GNSS function. The high sensitivity GNSS solution ensures the data collection in difficult environments.

The modem is Quad-Bands (850/900/1800/1900 MHz) GSM/GPRS Class 12.

The modem is six-bands (I, II, IV, V, VI, VIII) UMTS / HSPA.

The GenLoc 354e provides 3 operating modes depending on the embedded application:

- External mode (standard): The control is done by an external application. The modem is used with the AT command set (see Commands List EG_EGM_CL_xxx_yy of ERCOGENER).
- Autonomous mode: Once configured, the modem is autonomous; it cyclically registers the positions and automatically transmits them to the client's application via different services: SMS, GSM Data, TCP socket GPRS/UMTS (see EG_EaseLoc_Vx_CL_yyy_UK of ERCOGENER).
- Specific development mode: the EGM development tool allows the development of additional and customized embedded applications. For more information about the tools and the training, please contact our sales department.

Its protocols of IP connectivity integrated in the embedded application EaseLoc_Vx, are also available under EGM libraries for a specific development, allowing a quick installation of embedded telematics solutions with strong added-value.

This document describes the modem and provides the following information:

- General presentation,
- Functional description,
- Available basic services,
- Installation and use of the modem (first level),
- Recommended accessories for the use of the modem.

For more information about this document, ERCOGENER puts at your disposal the following elements:

- Commands List
  - External Mode EG_EGM_CL_xxx_yy
  - Autonomous Mode EG_EaseLoc_Vx_CL_yyy_UK
- Application Note EG_GenLoc354e_1040_AN_xxx_yy
- Release Note EG_GenLoc354e_1040_RL_xxx_yy
- Client Support (Hot-Line)

Descriptions and non-contractual illustrations in this document are given as an indication only.
ERCOGENER reserves the right to make any modifications.

Warning

- ERCOGENER recommends to read carefully all documents linked to the product GenLoc 354e (User Guide, Application Notes, Command List) that can be download on our website www.ercogener.com.
- ERCOGENER cannot be held responsible for:
  - The problems due to an inappropriate use of the GenLoc 354e.
  - The problems due to a wrong configuration
  - The problems due to a wrong use of an embedded software application developed or supplied by a third party.
  - The dysfunctions due to the absence or a bad coverage of the GSM, GPRS and GNSS networks.
  - The dysfunctions if the product is used for the watching of physical persons where human life is engaged.
- ERCOGENER reserves the right to modify the functions of its products "GenLoc 354e" and "EaseLoc" without previous notice.

- To avoid any risk of electrocution, do not open the casing.
- For any functioning, the casing must be closed.
- No internal part can be repaired by the user. The **GenLoc 354e** must be returned to the factory for any repair.
- The **GenLoc 354e** must be placed in a normally ventilated area, out of sources of heat.
- In order to guarantee the electromagnetic compatibility, the length of the serial cable, the power supply cable and the inputs/outputs cable must not exceed 3 meters.
- The **GenLoc 354e** must not be connected directly to the mains supply; a voltage adapter must be used.

SCRAP THE WORN BATTERIES ACCORDING TO INSTRUCTIONS.

Copyright

The reproduction, transfer, distribution or storage of part or the totality of the contents of this document, in any form, without the prior written authorization of ERCOGENER is strictly prohibited.

GenLoc 354e is a trademark of ERCOGENER.
Hayes is a registered trademark of Hayes Microcomputer Product Inc. The names of products and companies mentioned in this document may be names or trademarks of their respective holders.

The use of some products or services described in this document may require a paying subscription. The availability of some products or services described in this document may change, depending on the configurations and the materials.
In some countries, restrictions of use of the devices may be applied. For more information, thank you to contact your nearest legally qualified local government representative.

ERCOGENER follows a method of continuous development. Consequently, ERCOGENER reserves the right to change and improve any of its products described in this document, without notice.
The contents of this document are provided “as it is”. Except for the applicable obligatory laws, no guarantee in any form, explicit or implicit, including but without being limited to it the implicit guarantees of aptitude to marketing and of appropriateness to a particular use, is granted concerning the precision, the liability or the contents of this document. ERCOGENER reserves the right to revise or withdraw this document at any time and without notice.

ERCOGENER cannot be held responsible for any loss of data or income, as well as particular damage, incidental, consecutive or indirect.

Symbols used

The following symbols are used to highlight the important information of this document.

A symbol for the essential information linked to the module integration and performance.

A warning symbol indicates the actions that could harm or damage the module

Descriptions and non-contractual illustrations in this document are given as an indication only.
ERCOGENER reserves the right to make any modifications.

1 Security recommendations

1.1 General security

It is important to respect the specific regulations linked with the use of radio equipment, in particular with the possible risks of interference due to radio frequency (RF). Please respect carefully the following security recommendations.

Turn OFF your GSM modem:

- On an aircraft, the use of cellular telephones can endanger the plane operations; disturbing the cellular network is illegal. The non-observance of this instruction can lead to the suspension or the exclusion of the cellular phone services, or even to a trial, or both,
- At a refueling station,
- In any area with a potential explosive atmosphere that could cause an explosion or a fire,
- In hospitals and other places where medical equipment may be used.

Restrictions of use of radio equipment in:

- Fuel warehouses,
- Chemical factories,
- Places where destruction operations are in the running,
- Other places where signs indicate that the use of cellular phones is prohibited or dangerous.
- Other places where you should normally turn OFF the engine of your vehicle.

There can be a danger associated with the use of your GSM modem close to insufficiently protected medical equipment such as audio devices and pacemakers.

Consult the manufacturers of medical equipment to know if it is adequately protected.

Using your GSM modem close to other electronic equipment may also cause interferences if the equipment is insufficiently protected.

Pay attention to the warnings and the recommendations of the manufacturers.

The modem is designed to be used with "fixed" and "mobile" applications:

- “Fixed" application: The GSM modem is physically linked to a site and it is not possible to move it easily to another site.
- "Mobile" application: The GSM modem is designed to be used in various places (other than fixed) and is intended to be used in portable applications.
- The modem must be used at more than 20cm from the human body.

This equipment is supplied in Very Low Security Voltage and at non-dangerous energy level.

Descriptions and non-contractual illustrations in this document are given as an indication only.
ERCOGENER reserves the right to make any modifications.

1.2 Security in a vehicle

Do not use your Modem whilst driving, unless equipped with a correctly installed ear-piece/hands-free kit.

Respect the national regulations linked with the use of cellular telephones in vehicles. Road safety is always a priority.

An incorrect installation of the GSM modem in a vehicle could cause an incorrect functioning of the vehicle's electronics. To avoid such problems, make sure that the installation was made by a qualified person. During the installation, a verification of the electronic protection system of the vehicle must be done.

The use of a warning equipment that activates the headlights or the horn of a vehicle on a public highway is not authorized.

1.3 Care and maintenance

The following suggestions will help you to preserve this product for many years.

Do not expose the modem to the extreme environments, to high temperature or high humidity.

Do not use or store the modem in dusty or dirty places, it could be damaged.

Do not try to disassemble the modem, at the risk of cancelation of the guarantee.

Do not expose the modem to water, rain or spilled beverage, it is not impermeable.

Avoid dropping, striking, or shaking the modem violently. The lack of care can damage it.

Do not place the modem next to computer disks, credit or travel cards or other magnetic supports. The information contained on disks or cards can be affected by the modem.

The use of other equipment or accessories not made or not authorized by ERCOGENER can cancel the warranty of the modem.

The battery is not covered by the warranty.

1.4 Your responsibility

This modem is under your responsibility. Treat it with care, it is not a toy. Keep it always in a secure place and out of the reach of children.

Try to remember your PIN and PUK codes. Familiarize yourself with the modem and use the security functions to lock it in case of non-authorized use or in case of theft.

Descriptions and non-contractual illustrations in this document are given as an indication only.
ERCOGENER reserves the right to make any modifications.

2 Presentation

2.1 Content

The GenLoc 354e is supplied with:

- a GenLoc 354e cardboard packaging,
- a modem GenLoc 354e,
- 2 fixing brackets,
- a 4-wire power supply cable, input/output (Red/Black/Yellow/Brown) stripped with fuse.
- a stripped cable with a 14-pin connector equipped, (Inputs/Outputs).
- a stripped cable with a 16-pin connector equipped (14 wires, Serial link).
- a technical sheet (Instructions Sheet).

Figure 1 : Content

2.2 Modem packaging

The external dimensions of the modem packaging are:

- Width .....: 160 mm,
- Height .....: 280 mm,
- Length .....: 64 mm.
- Weight .....: 785 g

2.3 Mechanical characteristics

Table 1 : Mechanical characteristics

Dimensions	95 x 92 x 40 mm (connectors excluded)
Complete dimensions	104 x 92 x 40 mm
Weight	≈ 206 grams (modem only) < 618 grams (modem + brackets + cables)
Volume	≈ 382 cm³
Casing	Aluminium profile
Waterproof level	IP31

The illustration below shows the dimensions of the modem including the clearances necessary for the installation of the modem.

Figure 2 : Dimensions

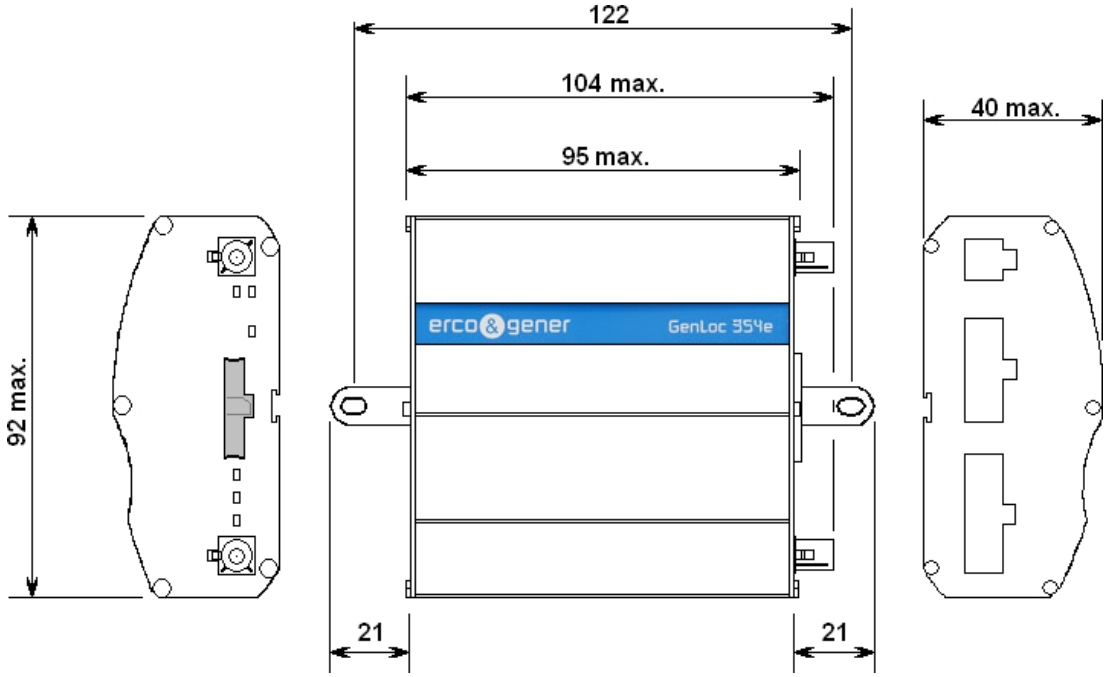

2.3.1 Fixing brackets

2 brackets to fix the modem on a support.

Figure 3 : Back side

2.4 Characteristics and Services

2.4.1 Services

The GenLoc 354e is made:

- A GSM/GPRS/EDGE/UMTS modem class12 dedicated to the transmission of binary data in asynchronous and SMS.
- A GNSS module dedicated to position tracking.

The modem characteristics and the available services are summarized in the table below.

Table 2 : Characteristics and services

Functions 3G UMTS / HSPA - 2G GSM / GPRS / EDGE			
• WCDMA / HSPA	800/850/900/1700/1900/2100 MHz 3GPP Release 7 5.76 Mb/s uplink, 7.2 Mb/s downlink		(Bands VI, V, VIII, IV, II, I)
• GSM	4 band 850 / 900 / 1800 / 1900 MHz 3GPP Release 7 PBCCH support		(support GSM / E-GSM / DCS / PCS)
• GPRS	Class 12, CS1-CS4 - up to 86.5 kb/s		
• EDGE	Class 12, MCS1-9 - up to 236.8 kb/s		
• CSD	GSM max 9.6 kb/s UMTS max 64 kb/s		
• SMS	MT/MO PDU / Text mode		
• WCDMA / HSDPA • GSM / GPRS • EDGE	Power Class 3 Power Class 4 Power Class 1 Power Class E2 Power Class E2	(24 dBm) (33 dBm) for GSM/E-GSM bands (30 dBm) for DCS/PCS bands (27 dBm) for GSM/E-GSM bands (26 dBm) for DCS/PCS bands	
• Sensitivity	850/900 @ 25 °C 1800/1900 @ 25 °C UMTS 800 (band VI) UMTS 850 (band V) UMTS 900 (band VIII) UMTS 1700 (band IV) UMTS 1900 (band II) UMTS 2100 (band I)	-110 dBm, -109 dBm, -111 dBm, -112 dBm, -111 dBm, -111 dBm, -111 dBm, -111 dBm,	Downlink RF level @ BER Class II < 2.4 % Downlink RF level @ BER Class II < 2.4 % Downlink RF level for RMC @ BER < 0.1 % Downlink RF level for RMC @ BER < 0.1 % Downlink RF level for RMC @ BER < 0.1 % Downlink RF level for RMC @ BER < 0.1 % Downlink RF level for RMC @ BER < 0.1 % Downlink RF level for RMC @ BER < 0.1 %
SIM Toolkit			

GNSS functions		
• Rx frequency	1575.42 MHz 1602 MHz 1561.098 MHz	
• Impedance	50 Ω, nominal	
• Max. RF input	15 dBm max (50 Ω, sinusoidal)	
• Antenna	Active and passive	
• Antenna gain (min./ max.)	15 dB typ / 50 dB max	
• Max. noise factor	1.5 dB	
• Protocols :	NMEA-0183, UBX Binary, RTCM	
• A-GPS compatible		
• Reception	72 channels GPS L1C/A SBAS L1C/A QZSS L1C/A GLONASS L1OF BeiDou B1	
• Time To First Fix [1]	Cold Start	27 s
	Hot Start	1 s
	Aided Starts[4]	4 s
• Sensitivity [4]	Tracking & Navigation	-164 dBm
	Reacquisition	-159 dBm
	Cold Start[2]	-147 dBm
	Hot Start	-156 dBm
• Refresh period		1 Hz
• Horizontal position precision [6]	Autonomous	2.5 m
	SBAS	2.0 m
• Speed precision [5]		0.05 m/s
• Position precision [5]		0.3 degrees
• Dynamic		≤ 4 g
• Speed limit[7]		500 m/s

[1] All satellites at -130 dBm
[2] Dependent on aiding data connection speed and latency
[3] BeiDou assisted acquisition is not available with FW 2.01
[4] Demonstrated with a good external LNA
[5] 50% @ 30 m/s
[6] CEP, 50%, 24 hours static, -130 dBm, > 6 SVs
[7] Assuming Airborne < 4 g platform

Descriptions and non-contractual illustrations in this document are given as an indication only.
ERCOGENER reserves the right to make any modifications.

Interfaces
• GSM antenna: connector FAKRA-D
• GNSS antenna: connector FAKRA-C
• Power supply 3.2V for active GNSS antenna
• Power supply: +8 to +32 V_{DC} (4-pin micro-FIT connector)
• 1 serial port RS232_0 (300 to 115200bds) Sub-D 9 pins female
• 1 serial port RS232_1 (300 to 115200bds)
• 1 serial link K-Line (ISO 9141-2)
• AT commands : GSM 07.05 and 07.07
- Specific AT commands for GNSS
- SIM reader (SIM 3V – 1,8V)
• 3 opto-coupled inputs • 2 isolated opto-coupled inputs • 3 open collector outputs • 2 analog inputs (0 – 10 Volts)
• 1 power supply output V_{POWER} controllable (16-pin connector micro-FIT)
• Inhibition of the battery charge
• 1 Buzzer output (connector 14 pins micro-FIT)
• Backup battery
• 1 port ONE_WIRE
• Power supply output 4,8 V
• 3-axis accelerometer

Accessories supplied
• Fixing brackets (x2)
• Cables with 4-wire Micro FIT connector (Power supply, Input and Output)
• Cables with 14-pin Micro FIT connector, 14 wires (Input and Output)
• Cables with 16-pin Micro FIT connector, 14 wires (Serial ports)

Options / Additional accessories *	
• Bus CAN MCP2515	S0467D
• Double SIM reader	S0471C
• ONE WIRE Multi slaves	S0470C
• 1 serial port RS232_2 RS232C	S0469B
• 2 analog inputs (4 – 20 mA)	S0475C
• Accessories: Antennas, cables, power supplies... (information available on our website)	

* These options are in addition or replace some existing options, contact us (see § **0**
*)

Descriptions and non-contractual illustrations in this document are given as an indication only.
ERCOGENER reserves the right to make any modifications.

2.5 Environmental characteristics

To ensure a correct operation of the Modem, the specific limits described in the table below must be respected.

Table 3: Environmental characteristics

Operating temperature range	
Battery charging	0 °C to +45 °C
Battery discharging	-20 °C to +45 °C
Storage temperature range	1 year of storage between -20°C to + 35°C 3 months of storage between -20°C to + 45°C 1 month of storage between -20°C to + 60°C
Relative humidity	65 ±20%
Atmospheric pressure	700 hPa to 1060 hPa (-400 m to 3000 m)

Above 45 °C inside the box, the protection of the battery management triggers. The battery will not be charged.

3 Interfaces

3.1 Front side

Figure 4 : Front side

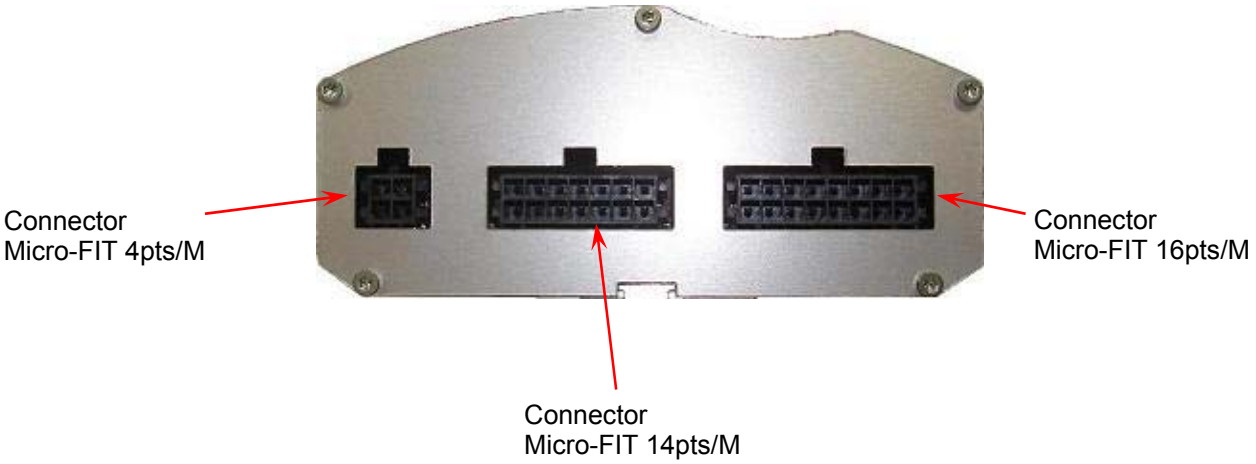

See ANNEX 1 – 4-pins Micro-FIT cable , ANNEX 2 - 14-pins Micro-FIT cable (Inputs/Outputs), ANNEX 4 – 16-pins Micro-FIT cable (16 wires, Serial links, Boot and Reset) and ANNEX 4 – 16-pins Micro-FIT cable (16 wires, Serial links, Boot and Reset) for the wiring of the different connectors.

Table 4 : Front side connection

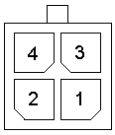

	Micro Fit 4 pins
1	OUTPUT 1 (S1)
2	INPUT 1 (E1)
3	GND
4	$+V_{DC}$

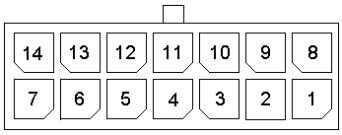

	Micro Fit 14 pins
1	ONE_WIRE
2	ANA2
3	E5-
4	E5+
5	E4
6	S3
7	V_{BAT}
8	GND
9	ANA1
10	E3-
11	E3+
12	E2
13	S2
14	BUZZER

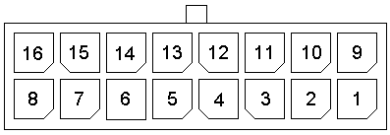

	Micro Fit 16 pins
1	GND
2	--
3	--
4	GND
5	CTS_1
6	K-Line (ISO 9141-2)
7	TX_1
8	RX_1
9	POWER_OUT
10	RESET
11	BOOT
12	GND
13	CTS_0
14	RTS_0
15	TX_0
16	RX_0

Descriptions and non-contractual illustrations in this document are given as an indication only.
ERCOGENER reserves the right to make any modifications.

3.2 Back side

Figure 5 : Back side

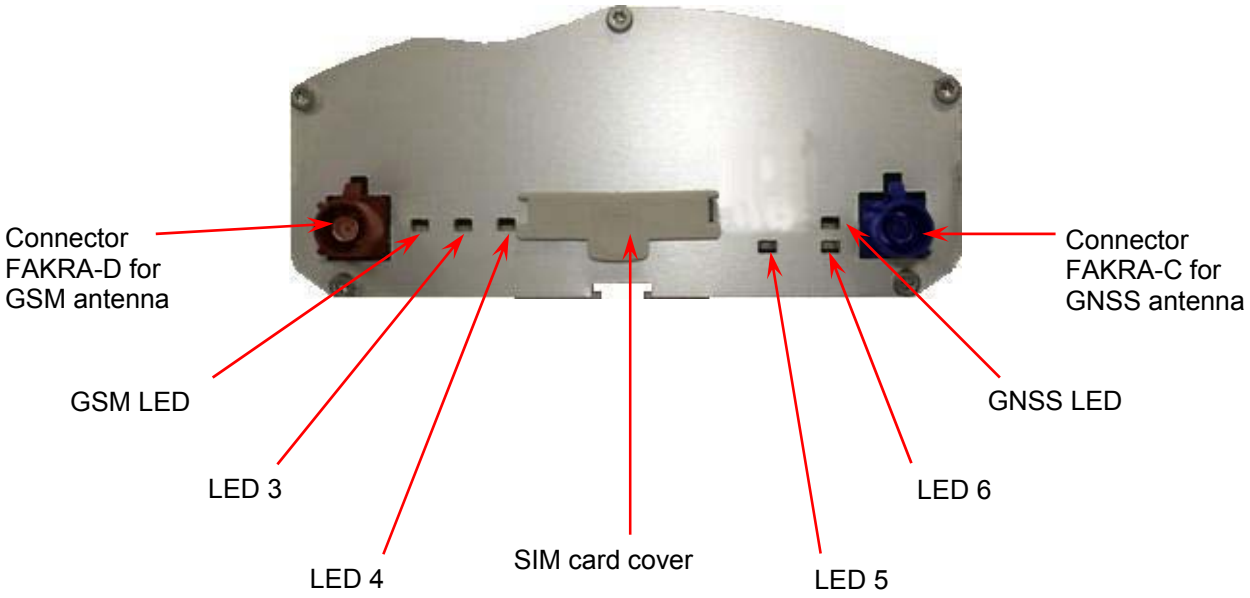

Descriptions and non-contractual illustrations in this document are given as an indication only.
ERCOGENER reserves the right to make any modifications.

3.3 Functional architecture

Figure 6 : Functional architecture

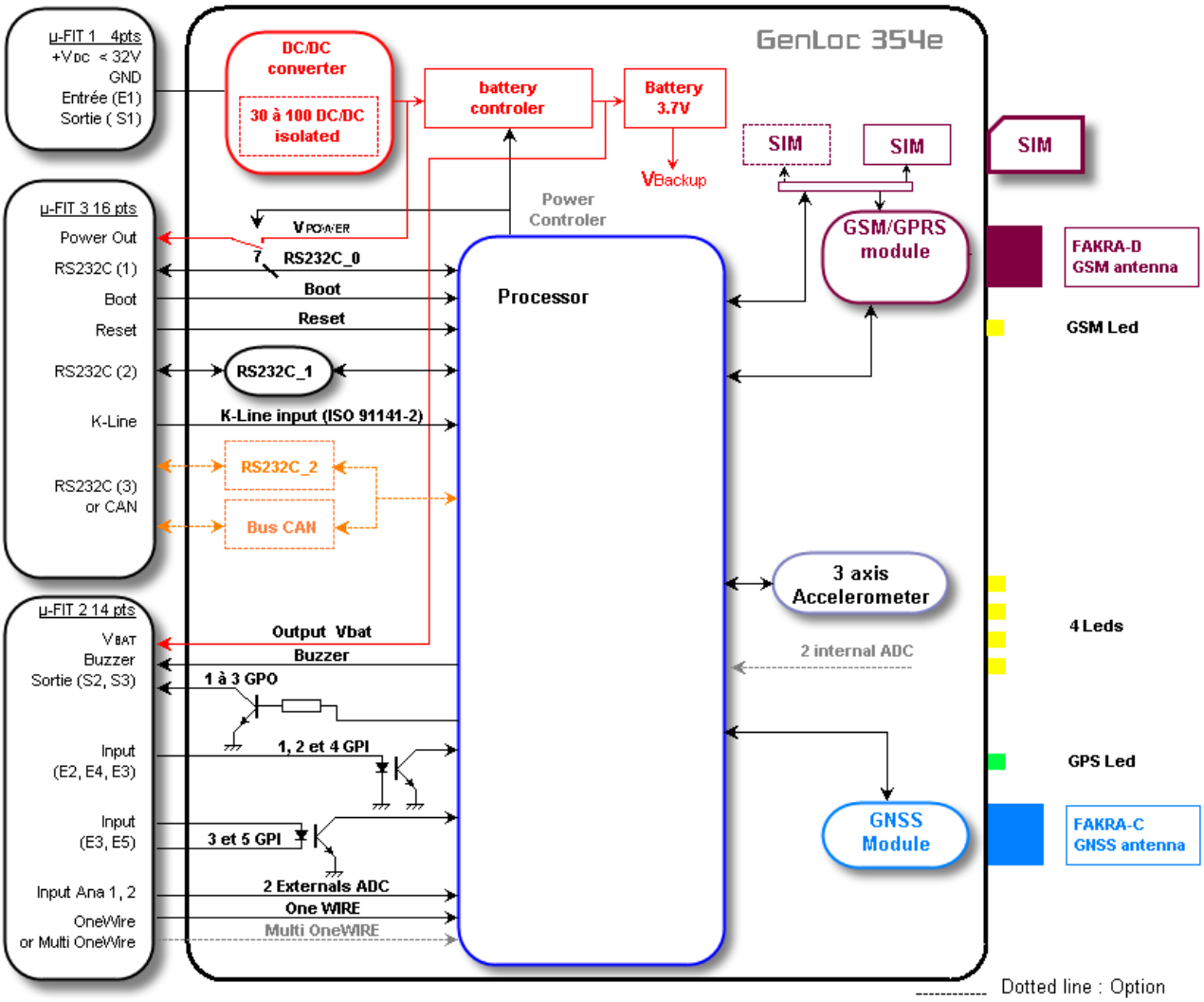

3.4 Power supply

If the battery is present, the fact of removing the power supply $+V_{DC}$ will not turn the modem OFF. For this, see the § 6.2 Turning the modem OFF

3.4.1 Power supply cables

The modem is powered with the cable supplied with the equipment (ERCOGENER reference: 4402304215). (See ANNEX 1 – 4-pins Micro-FIT cable (4 wires, Power supply))

The modem is protected by a fuse F2 A / 32 V directly assembled on the power cable supplied with the modem.

The power cable supplied with the modem must be absolutely used; without this cable, the modem will not be protected.
The pins 1 and 2 are used for the functions Input/Output. The power supply to the modem is done only via the pins 4 ($+V_{DC}$) and 3 (GND).

The modem must be powered by an external DC voltage between $+8V_{DC}$ and $+32V_{DC}$.

The internal regulation is done by a DC/DC converter and allows the supply of all necessary internal DC voltages.

The modem is also internally protected against voltage peaks of more than 32 V_{DC}.

The following table describes the consequences of an overvoltage or drop of voltage on the modem.

3.4.2 Power supply 8 – $32V_{DC}$

The following table describes the consequences of an overvoltage or drop of voltage on the modem.

Table 5 : Effects of power supply defect

	Then:
▪ Voltage falls below 8V	▪ The functioning and the GSM and GNSS communication are not guaranteed when the remaining capacity of the battery is not sufficient.
▪ Voltage above 32V (Punctual peaks)	▪ The modem guarantees its own protection.
▪ Voltage above 32V (Continuous overvoltage)	▪ The modem is protected by the fuse assembled on the power supply cable in combination with the internal protection.

Descriptions and non-contractual illustrations in this document are given as an indication only.
ERCOGENER reserves the right to make any modifications.

3.4.2.1 Internal battery

This battery allows to maintain the operation of the GenLoc 354e in case of absence of its external power supply.

The internal charging circuit allows to keep permanently the charge of the battery from the external power supply.

When the battery is completely discharged, 4 h 30 mn are necessary to obtain a new complete charge. It is normal if the box is becoming a little bit hot in this case.

The autonomy of the battery mainly depends and the mode of use of the GenLoc 354e (attachment in GSM/GPRS, Inputs/Outputs, GNSS power supply, RS232 connected...).

In the case where the software management of the battery guarantees that the voltage V_{BAT} does not fall below 3,55 V, with a battery with 3 charge cycles and fully charged, the autonomy is around:

- 1 h 20 mn in GPRS - 900MHz - 3Rx/2TX communication, serial link not connected, no Input Output connected, in maximum emission.
- 35 mn in WCDMA Band I communication, serial link not connected, no Input Output connected, in maximum emission.
- 7 h in attached to GPRS network without data transfer, serial link not connected, no Input Output connected.

When the battery is charged, it is not possible to do an ON/OFF of the device. Only putting the Reset input (pin 10 of the 16-pin Micro-FIT connector) to the Ground or sending the command AT+EGMRST allows a reset of the modem.

When the temperature exceeds 45 °C inside the box, the protection of the battery management triggers. The battery will not be charged.

If the battery is present, prepare the modem for storage or transport conditions, in order to limit high discharges of the battery. For this, see § 6.2 Turning the modem OFF

Table 6 : Characteristics of the polymer lithium battery

Voltage (max.)	4.2V	
Type	Lithium Polymer (LiPolymère)	
Capacity	1000 mA/h typical	
Exp. cycle time	>300 cycles> 70% of the initial capacity	
Temperature range	Charge : 0°C to +45°C	Discharge : -20°C to +60°C
Protection (Resettable fuse)	Discharge voltage : 2.30V ±0.058V Maximum discharge current : 2A to 4A (1.0±0.3s)	

The battery cannot be replaced or modified by the user; the device must never be opened.
For any intervention on the battery: the device must be returned to the factory.
Do not throw the modem and the battery on the fire.

Descriptions and non-contractual illustrations in this document are given as an indication only.
ERCOGENER reserves the right to make any modifications.

3.4.2.2 Consumption of the GenLoc 354e

Table 7 : Power supply range

Power supply range	8 V_{DC} to 32V_{DC}

Table 8: Consumption in Low Power mode @ 25 °C without battery charging

Low Power	**Average I nominal**				**Unit.**
V_{IN}	**8**	**12**	**24**	**32**	**V**
$I_{MOY\ MAX}$	15	10	6	5	mA

Le GenLoc 354e is in Low Power mode with the command ***AT+EGLOP=1,xx***.

This Low Power mode is only used with ***EaseLoc***.

Table 9 : Consumption in attached mode @ 25 °C without battery charging

Attached mode	**$I_{MOY\ MAX.}$**				**Unit.**
V_{IN}	**8**	**12**	**24**	**32**	**V**
GSM 900 / 1 800 MHz	83	56	31	26	mA
GPRS / EDGE	78	52	27	22	mA
3G UMTS / HSPA	79	53	27	21	mA

The GenLoc 354e is attached to the network.

Table 10 : Consumption in data transfer @ 25 °C without battery charging

								Unit
V_{IN}				**8**	**12**	**24**	**32**	**V**
GSM		**900(1)**	**$I_{MOY\ MAX}$**	240	150	75	55	mA
			$I_{PIC\ MAX}$	1265	745	360	265	mA
		1 800(2)	**$I_{MOY\ MAX}$**	175	125	65	50	mA
			$I_{PIC\ MAX}$	810	595	290	220	mA
GPRS	**4 Rx / 1 Tx**	**900(1)**	250	160	80	60	55	mA
			1190	735	360	270	290	mA
		1 800(2)	205	135	65	50	45	mA
			940	585	285	220	240	mA
	3 Rx / 2 Tx	**900(1)**	380	235	115	90	90	mA
			1305	765	370	280	290	mA
		1 800(2)	305	190	95	75	70	mA
			1010	595	290	220	240	mA
EDGE	**4 Rx / 1 Tx**	**900(3)**	250	160	80	60	55	mA
			1195	730	360	270	290	mA
		1 800(4)	205	135	65	50	45	mA
			945	585	285	220	250	mA
	3 Rx / 2 Tx	**900(3)**	250	160	80	60	90	mA
			1190	735	360	270	290	mA
		1 800(4)	205	135	65	50	75	mA
			940	585	285	220	260	mA

Descriptions and non-contractual illustrations in this document are given as an indication only.
ERCOGENER reserves the right to make any modifications.

Table 11 : Consumption in data transfer @ 25 °C without battery charging

							Unit
V_{IN}			**8**	**12**	**24**	**32**	**V**
3G UMTS / HSPA(5)	Band I	$I_{MOY\ MAX}$	415	270	135	105	mA
		$I_{PIC\ MAX}$	455	295	150	115	mA
	Band II	$I_{MOY\ MAX}$	490	315	160	120	mA
		$I_{PIC\ MAX}$	530	345	170	135	mA
	Band IV	$I_{MOY\ MAX}$	450	295	145	115	mA
		$I_{PIC\ MAX}$	485	230	160	125	mA
	Band V	$I_{MOY\ MAX}$	355	235	120	95	mA
		$I_{PIC\ MAX}$	395	255	130	105	mA
	Band VIII	$I_{MOY\ MAX}$	365	235	120	95	mA
		$I_{PIC\ MAX}$	405	260	135	105	mA

(1) adapted antenna, RF power max. 33dBm.
(2) adapted antenna, RF power max. 30dBm.
(3) adapted antenna, RF power max. 27dBm.
(4) adapted antenna, RF power max. 26dBm.
(5) adapted antenna, RF power max. 24dBm.

Table 12: Consumption of the battery charge @ 25 °C

Battery charge	**Average I nominal**				**Unit.**
V_{IN}	**8**	**12**	**24**	**32**	**V**
	185	110	50	40	mA

3.4.2.3 Power Dimensioning

The graph below indicates the maximum peak current. The power supply must be able to supply this current during the GSM "***Burst***".

Figure 7 : Consumption max

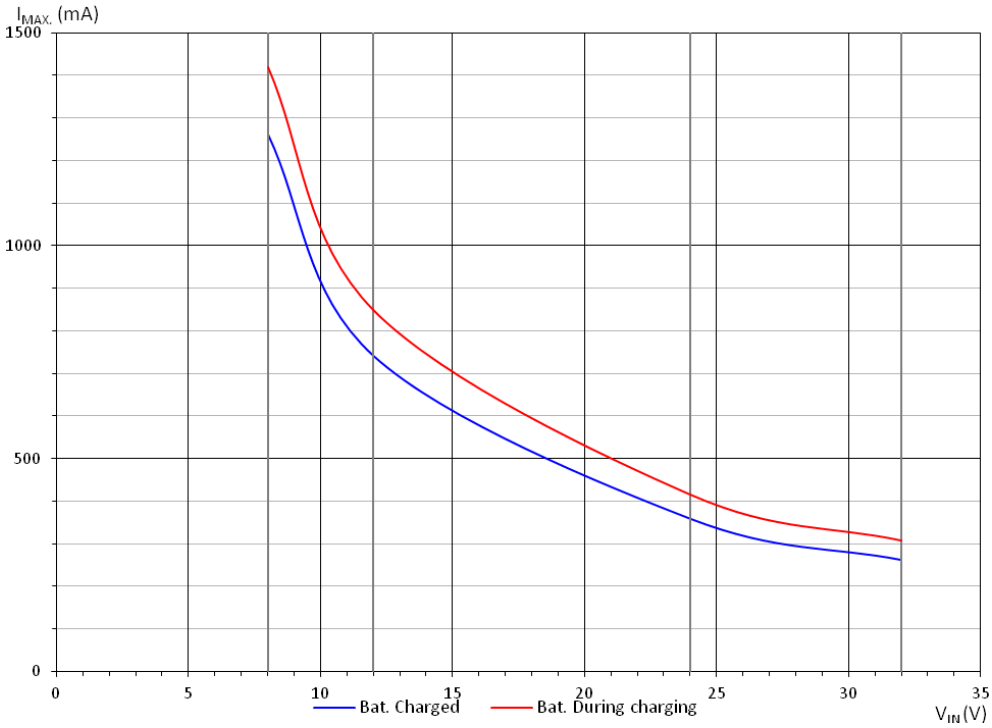

This consumption is not permanent. It corresponds to the burst consumption during GSM communications.

Descriptions and non-contractual illustrations in this document are given as an indication only.
ERCOGENER reserves the right to make any modifications.

3.5 One Wire Bus

3.5.1 One Wire Bus

By default, the One Wire Bus is managed by the processor and only manages « serial number » readers in read-only mode 64 bits.

Table 13: One Wire Bus description

Signal	14-pin connector Pins N°	I/O	Kind of I/O	Description
Bus One Wire	1	I/O	Analog	One Wire Bus
GND	8			

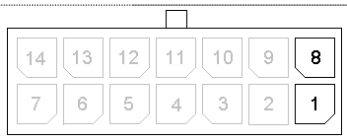

Corresponds to wires
White/green for One Wire Bus
Black for GND
see ANNEX 2 - 14-pins Micro-FIT cable (Inputs/Outputs)

Table 14 : One Wire Bus – Electrical characteristics

Characteristics	Symbols	Conditions	Min.	Typ.	Max.	Unit
Input Voltage – Low	V_{IL}		-0.3		0.8	V_{DC}
Input Voltage – High	V_{IH}		2		3.5	V_{DC}
Hysteresis Voltage	V_{Hys}		0.4		0.7	V_{DC}
Input Leakage Current	I_{LEAK}		-4		38	μA_{DC}
Input capacitance	C_{IN}				14	pF
Output Low-level Voltage	V_{OL}				0.4	V_{DC}
Output High-level Voltage	V_{OH}		2.8			V_{DC}
Output Current	I_o				±16	mA_{DC}

Figure 8 : Internal electrical scheme of the One Wire bus

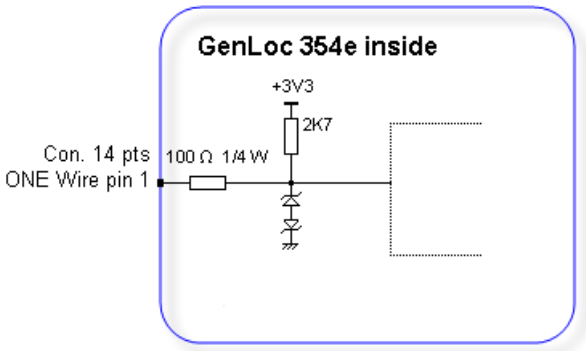

Assembly working with identification keys DS1990 iButton® from the manufacturer MAXIM.

The integrator has the responsibility to protect the input from electrical perturbations and to respect the functioning parameters values.

3.5.2 Option Multi 1- Wire Bus S0470C

This option ***Multi 1-Wire*** reference ***S0470C*** allows the reading of all 1-wire devices with the possibility to have several devices on the same bus.

This option Multi 1-wire cannot be used with the ***EaseLoc*** application but can be directly controlled with an ***EGM*** development.

Table 15 : Multi 1- Wire Bus description S0470C

Signal	14-pin connector Pins N°	I/O	Kind of I/O	Description
Bus One Wire	1	I/O	Analog	Bus Multi 1- Wire
GND	8			

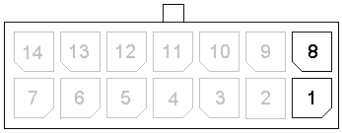

Corresponds to wires
White/green for One Wire Bus
Black for GND
see ANNEX 2 - 14-pins Micro-FIT cable (Inputs/Outputs)

Table 16 : Multi 1- Wire Bus – Electrical characteristics S0470C

Characteristics	Symbols	Conditions	Min.	Typ.	Max.	Unit
Input Voltage – Low	V_{IL}		-0.3		0.9	V_{DC}
Input Voltage – High	V_{IH}		1.9		3.3	V_{DC}
Input Leakage Current	I_{LEAK}		-10		10	μA_{DC}
Input capacitance	C_{IN}				10	pF
Output Low-level Voltage	V_{OL}	@ charge 4mA			0.4	V_{DC}
Output High-level Voltage	V_{OH}	@ charge 4mA	2.8		3.3	V_{DC}
Active Pullup On Time [4, 5]	t_{APUOT}		2.3	2.5	2.7	µs
Pulldown Slew Rate [6])	P_{DSRC}		1		4.2	V/µs
Pullup Slew Rate [6])	P_{USRC}		0.8		4	V/µs
Power-On Reset Trip Point	V_{POR}				2.2	V
Write-One/Read Low Time	t_{W1L}		7.6	8	8.4	µs
Read Sample Time	t_{MSR}		13.3	14	15	µs
1-Wire Time Slot	t_{SLOT}		65.8	69.3	72.8	µs
Fall Time High-to-Low [6, 7]	t_{F1}		0.54		3.0	µs
Write-Zero Low Time	t_{W0L}		60	64	68	µs
Write-Zero Recovery Time	t_{REC0}		5.0	5.3	5.6	µs
Reset Low Time	t_{RSTL}		570	600	630	µs
Presence-Detect Sample Time	t_{MSP}		66.5	70	73.5	µs
Sampling for Short and Interrupt	t_{SI}		7.6	8	8.4	µs
Reset High Time	t_{RSTH}		554.8	584	613.2	µs

[4] Active or resistive pullup choice is configurable.

[5] Except for t_{F1}, all 1-Wire timing specifications and t_{APUOT} are derived from the same timing circuit. Therefore, if one of these parameters is found to be off the typical value, it is safe to assume that all these parameters deviate from their typical value in the same direction and by the same degree.

[6] These values apply at full load, i.e., 1nF at standard speed and 0.3nF at overdrive speed. For reduced load, the pulldown slew rate is slightly faster.

[7] Fall time high-to-low (t_{F1}) is derived from P_{DSRC}, referenced from 2.97 V_{DC} to 0.33 V_{DC}.

Figure 9 : Internal electrical scheme of the Multi 1- Wire Bus S0470C

See Figure 8 : Internal electrical scheme of the One Wire bus

3.6 Analog inputs ANA1 and ANA2

3.6.1 Analog inputs 0 – 10 V_{DC}

Table 17 : Description of analog inputs 0 – 10 V

Signal	14-pin connector Pins N°	I/O	Kind of I/O	Description
ANA1 ANA2 GND	9 2 8	I	Analog	Analog input 0 – 10V

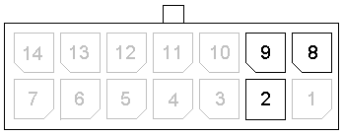

Corresponds to wires
Violet for ANA1
Grey for ANA2
Black for GND
see ANNEX 2 - 14-pins Micro-FIT cable (Inputs/Outputs)

Table 18 : Characteristics of analog inputs 0 – 10 V

Characteristics	Symbols	Conditions	Min.	Typ.	Max.	Unit
Analog input	ANA1 / 2		-0.3		12.8	V_{DC}
Conversion range			1.3 µ		10.33	V_{DC}
Polarization current		From 1.3 µV to 10.33 V	0.064		345	$µA_{DC}$
Resolution				10		bits
Linearity				±2		LSB

The integrator has the responsibility to protect the input from electrical perturbations and to respect the functioning parameters values

Figure 10 : Internal electrical scheme of analog input 0 – 10 V

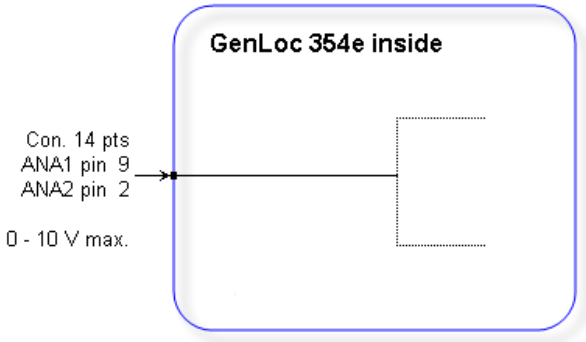

3.6.2 Option analog inputs 4 – 20 mA S0475C

This option ***ANA 4-20mA*** reference ***S0475C*** allows to have a current input.

Table 19 : Description of analog inputs 4 – 20 mA

Signal	14-pin connector Pins N°	I/O	Kind of I/O	Description
ANA1 ANA2 GND	9 2 8	I	Analog	Analog input4 – 20mA
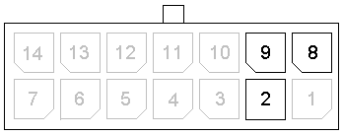	Corresponds to wires Violet for ANA1 Grey for ANA2 Black for GND see ANNEX 2 - 14-pins Micro-FIT cable (Inputs/Outputs)			

Table 20 : Characteristics of analog inputs 4 – 20 mA

Characteristics	Symbols	Conditions	Min.	Typ.	Max.	Unit
Voltage drop	ANA1 / 2		-0,3		3,0	V_{DC}
Conversion range			0		22	mA_{DC}
Polarization current				20	200	nA_{DC}
Resolution				10		bits
Linearity				±2		LSB

The integrator has the responsibility to protect the input from electrical perturbations and to respect the functioning parameters values.

Figure 11 : Internal electrical scheme of analog input 4 – 20 mA

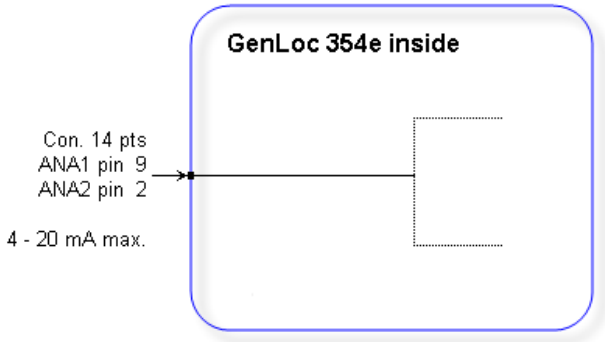

3.7 Opto-coupled inputs

Table 21 : Description of opto-coupled inputs

Signal	Connector Pins N°	I/O	Description
E1 GND E2 E4 GND	2 Connector 4 pins 3 Connector 4 pins 12 Connector 14 pins 5 Connector 14 pins 8 Connector 14 pins	I	Digital Inputs 0 – 35 V
	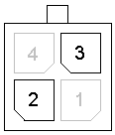		Corresponds to wires Yellow for E2 Black for GND See ANNEX 1 – 4-pins Micro-FIT cable (4 wires, Power supply)
	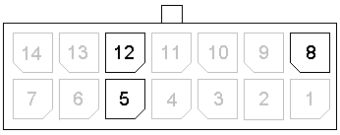		Corresponds to wires Brown for E2 Green for E4 Black for GND See ANNEX 2 - 14-pins Micro-FIT cable (Inputs/Outputs)

Table 22 : Characteristics of opto-coupled inputs

Characteristics	Symbols	Conditions	Min.	Typ.	Max.	Unit
Max. current	$I_{F\ (rms)}$				50	mA
Max.inverted voltage	V_R				5	V
Direct voltage	V_F	I_F = 10 mA	1.0	1.15	1.3	V
Inverted current	I_R	V_R = 5 V			10	µA
Capacity	C_T	V=0, f = 1 MHz	---	30	---	pF
Transfer ratio	I_C / I_F	I_F = 5 mA, V_{CE} = 5 V	50	---	600	%
Saturation of transfer ratio	I_C / $I_{F\ (SAT)}$	I_F = 1 mA, V_{CE} = 0.4 V		60		%
Command voltage			3,5		35	V
Idle voltage					1	V

Figure 12 : Internal electrical scheme of opto-coupled inputs

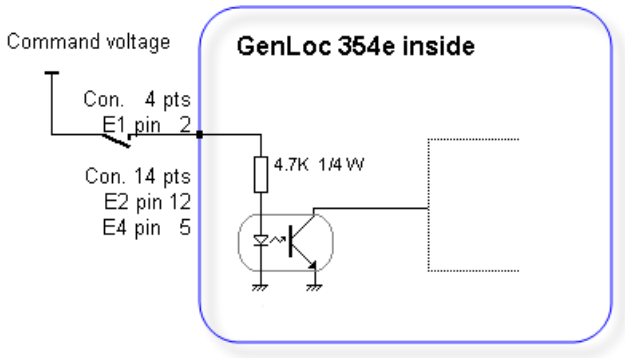

The minimum command voltage for the detection is: **3.5 V**

The maximum command voltage is : **35 V**

3.8 Isolated opto-coupled inputs

To allow any kind of connection, the inputs E3 and E5 have no electrical reference with the board. This allows a more flexible control compared with the different configurations encountered.

Table 23 : Description of isolated opto-coupled inputs

Signal	14-pin connector Pins N°	I/O	Description
E3+ E3- E5+ E5-	11 10 4 3	I	Isolated digital inputs 0 – 35 V
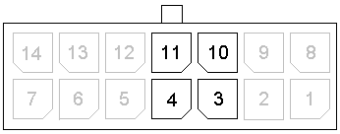		Corresponds to wires Yellow for E3+ Black for E3- Blue for E5+ Black for E5- see ANNEX 2 - 14-pins Micro-FIT cable (Inputs/Outputs)	

Table 24 : Characteristics of isolated opto-coupled inputs

The electrical characteristics are the same as in paragraph 3.7 Opto-coupled inputs .
See Table 22 : Characteristics of opto-coupled inputs

Figure 13 : Internal electrical scheme of isolated inputs

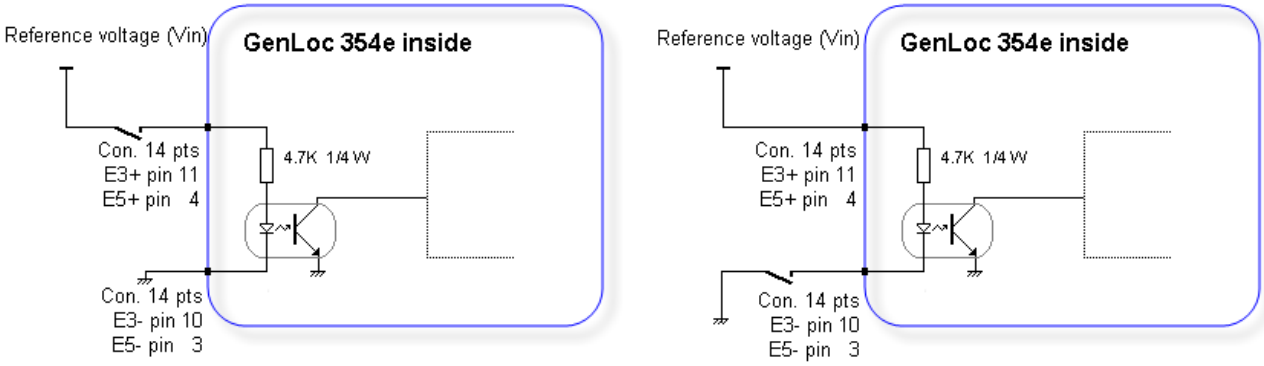

Control via plus Control via grounding

3.9 Digital outputs

Table 25 : Description of digital outputs

Signal	Connector Pins N°	I/O	Description
S1 S2 S3 GND	1 Connector 4 pins 13 Connector 14 pins 6 Connector 14 pins 8 Connector 14 pins	O	Open collector output
	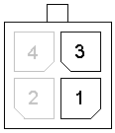	Corresponds to wires Brown for S2 Noir for GND See ANNEX 1 – 4-pins Micro-FIT cable (4 wires, Power supply)	
	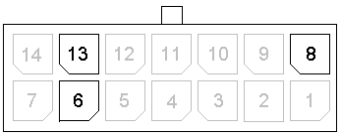	Corresponds to wires White/Brown for S2 White/Yellow for S3 Black for GND see ANNEX 2 - 14-pins Micro-FIT cable (Inputs/Outputs)	

Table 26 : Characteristics of open collector output

Characteristics	Symbols	Conditions	Min.	Typ.	Max.	Unit
Max. voltage	V_{CE0}	Transmitter open			48	V_{DC}
Max. voltage	V_{CES}	V_{BE} = 0 V			48	V_{DC}
Collector current	I_C				0.5	A_{DC}
Saturation voltage	V_{CEsat}	I_C = 500 mA			1.3	V_{DC}
Dissipation	P_{Ttot}	$T_{amb} \leq 25$ °C, T_j = 110 °C			0.78	W

Figure 14 : Internal electrical scheme of the output

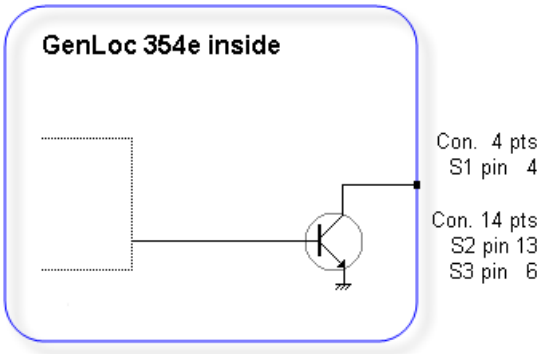

No protection is ensured. The user must respect the values of the table below.

Figure 15 : Example of relay control

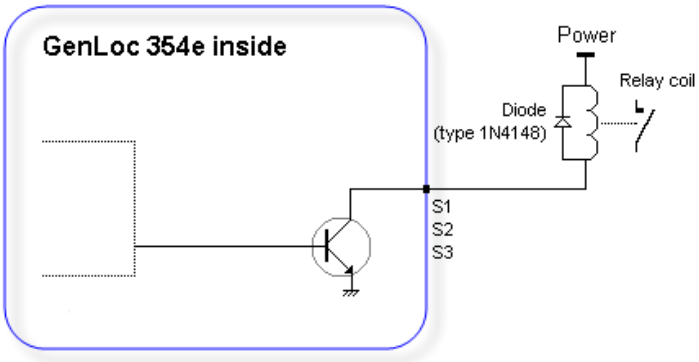

3.10 Power supply output V_{BAT}

Table 27 : Description of the power supply V_{BAT}

Signal	14-pin connector Pins N°	I/O	Kind of I/O	Description
+4.8V GND	7 8	O	Analog	Output voltage $3.55\ V_{DC} \leq V_{BAT} \leq 4.5\ V_{DC}$.
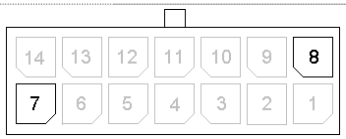		Corresponds to wires Orange for + $\mathbf{V_{BAT}}$ Black for GND see ANNEX 2 - 14-pins Micro-FIT cable (Inputs/Outputs)		

Table 28 : Conditions of use of the power supply output V_{BAT}

Parameters	Condition	Min.	Typ.	Max.	Unit
V_{OUT}	Without power supply [1]	3.55		4.0	V_{DC}
	With power supply 8V - 32V	4.2		4.4	V_{DC}
I_{OUT}	Max.			100 [2]	mA_{DC}

[1] The GenLoc 54e works with its battery only. In the case where the voltage V_{BAT} falls below 3.55 V_{DC}, the product cannot communicate anymore via the network.

[2] In the case where the software management of the battery guarantees that the voltage V_{BAT} does not fall below 3.55 V_{DC}. In case of low battery (V_{BAT} < 3.55 V_{DC}) or high discharge (V_{BAT} = 2.8 V_{DC}), and in order to guarantee a restart of the product, the consumption on this output must not exceed 50 mA.

2.8 V_{DC} is the self-protection limit of the battery. From this moment, the battery puts itself under protection, and the output voltage becomes null.
When the battery is not connected, the output voltage is $4.2\ V_{DC} \leq V_{OUT} \leq 4.4\ V_{DC}$ as long as the power supply $+V_{DC}$ is present.

3.11 Buzzer

By default, the GenLoc 354e provides a Buzzer output on the output 14 of the 14-pin connector. This PWM output provides a frequency; it is then dedicated to drive a **Transducer**.

Table 29 : Description of buzzer output

Signal	14-pin connector Pins N°	I/O	Kind of I/O	Description
BUZZER GND	14 8	O	Analog	Buzzer output
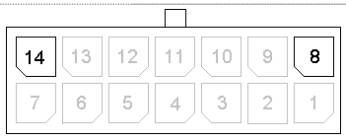		Corresponds to wires Red for BUZZER Black for GND see ANNEX 2 - 14-pins Micro-FIT cable (Inputs/Outputs)		

Table 30 : Characteristics of buzzer output

Characteristics	Symbols	Conditions	Min.	Typ.	Max.	Unit
collector-base voltage	V_{CB0}	Transmitter open			48	V_{DC}
collector-emitter voltage	V_{CE0}	Open base			40	V_{DC}
collector current (DC)	I_C				600	mA_{DC}
peak collector current	I_{CM}				800	mA_{DC}
Collector Cutoff Current	I_{CB0}	IE = 0; VCB = 60 V; Tj = 25 °C			10	nA_{DC}
		IE = 0; VCB = 60 V; Tj = 125 °C			10	μA_{DC}
collector-emitter saturation voltage	V_{CEsat}	IC = 150 mA; IB = 15 mA *			300	mV_{DC}
		IC = 500 mA; IB = 50 mA *			1	V_{DC}
transition frequency	f_T	IC = 20 mA; VCE = 20 V; f = 100 MHz			300	MHz
collector capacitance	C_C	$I_E = I_e = 0$; VCB = 10 V; f = 1 MHz			8	pF
total power dissipation	P_{Ttot}	$T_{amb} \leq 25$ °C			225	mW

* Pulse test: tp ≤ 300 µs; δ ≤ 0.02.

Table 31 : Example of Transducer tested with the GenLoc 354e

Buzzer characteristics	Values
Type	Transducer AT-2720-T-R
Consumptions	1-30V peak/3.5mA max.
Resonance frequency	2.048Hz ±500HZ
Sound pressure level (SPL)	Min.88dBA @10cm

Figure 16 : Example of Transducer tested with the GenLoc 354e

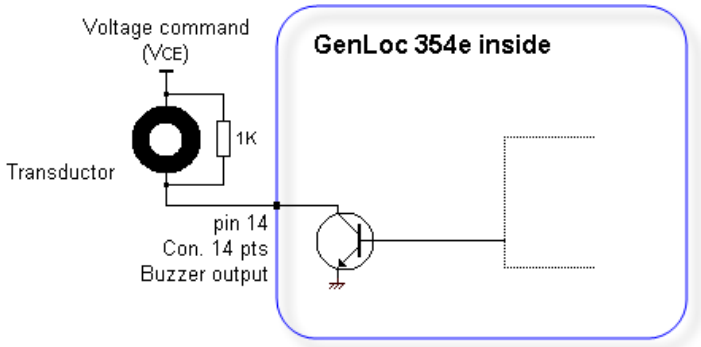

3.12 Input compatible K-Line (ISO 9141-2)

The GenLoc 354e is designed to be connected to a tachograph. (connector D8 of the tachograph).

Table 32 : Description of the input compatible K-Line (ISO 9141-2)

Signal	16-pin connector Pins N°	I/O	Kind of I/O	Description
K-Line GND	6 4	I	Digital	Tachograph data.
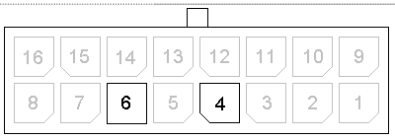		Corresponds to wires White/Yellow for K-Line Black for GND see ANNEX 3 – 16-pins Micro-FIT cable (14 wires, Serial links)		

Table 33 : Bus K-Line for a tachograph

Characteristics	Symbols	Conditions	Min.	Typ.	Max.	Unit
Input Voltage – Low	V_{IL}		-1		2,81	V_{DC}
Input Voltage – High	V_{IH}	GenLoc 354e at Power ON	7		17,5	V_{DC}
		GenLoc 354e at Power Down			13,36	V_{DC}
Input Leakage Current	I_{LEAK}	@ V_{IH} Max.			1,8	mA_{DC}

Figure 17 : Internal electrical scheme of the K-Line bus for a tachograph

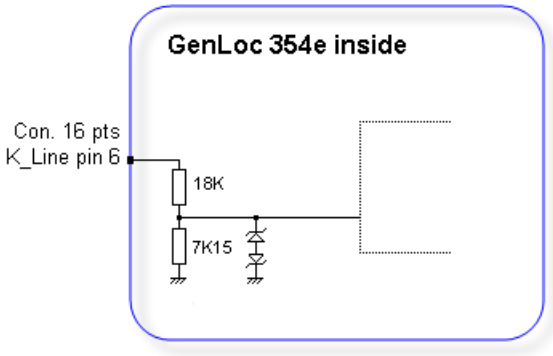

Figure 18 : Level of K-Line bus for a tachograph

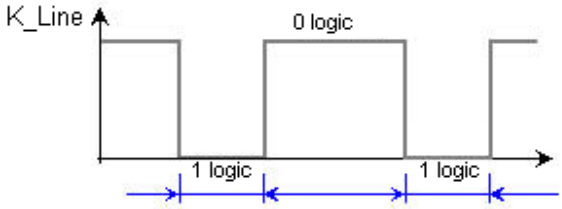

Figure 19 : Scheme for connection of K-Line input to tachograph

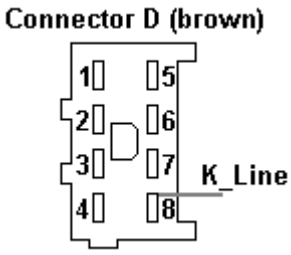

The integrator has the responsibility to protect the input from electrical perturbations and to respect the functioning parameters values.

Descriptions and non-contractual illustrations in this document are given as an indication only.
ERCOGENER reserves the right to make any modifications.

3.13 Serial link RS232_0

Table 34 : Pins description of serial link RS232_0

Signal	16-pin Micro FIT connector Pins N°	I/O	RS232 Standards	Description	9-pin Sub D connector Pins N°
CT103 / TX_0	15	I	TX	Data transmission	3
CT104 / RX_0	16	O	RX	Data reception	2
CT105 / RTS_0	14	I	RTS	Request to send	7
CT106 / CTS_0	13	O	CTS	Ready to send	8
GND	12			Ground	5

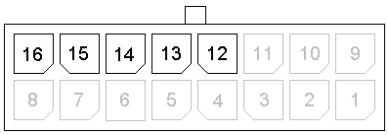

Corresponds to wires
Green for TX
Blue for RX
Yellow for RTS
Brown for CTS
Black for GND
see ANNEX 3 – 16-pins Micro-FIT cable (14 wires, Serial links)

Table 35 : Characteristics of serial link RS232_0

Characteristics	Symbols	Conditions	Min.	Typ.	Max.	Unit
Input Voltage – Range	V_{INPUT}	Input Voltage – Range	-25		+25	V_{DC}
Input Voltage – Low	V_{IL}	Input Voltage – Low	0.6	1.1		V_{DC}
Input Voltage – High	V_{IH}	Input Voltage – High		1.5	24	V_{DC}
Input Hysteresis	V_{Hys}	Input Hysteresis		0.5		V_{DC}
Input Resistance	R_{in}	Input Resistance	3	5	7	KΩ
Output Voltage	V_{OUT}	All transmitter outputs loaded with 3 kΩ to ground	±5	±5.4		V_{DC}
Transmitter Output Resistance	R_{OUT}		300	50k		Ω
RS-232 Output Short-Circuit Current	I_{CC}				±60	mA

Figure 20 : Standards signals of serial link RS232_0

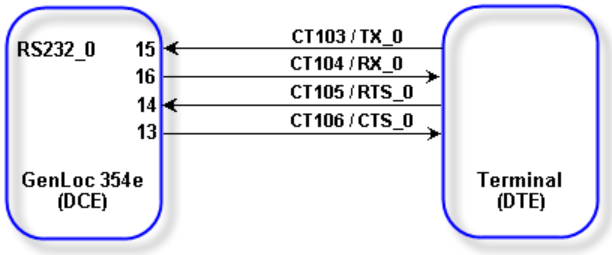

3.14 Serial link RS232_1

Table 36 : Pins description of serial link RS232_1

Signal	16-pin Micro FIT connector Pins N°	I/O	RS232 Standards	Description
CT103 / TX_1	7	I	TX	Data transmission
CT104 / RX_1	8	O	RX	Data reception
CT106 / CTS_1	5	O	CTS	Ready to send
GND	4			Ground

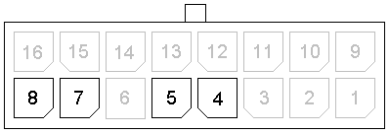

Corresponds to wires
White/Green for TX
White/Blue for RX
White/Brown for CTS
Black for GND
see ANNEX 3 – 16-pins Micro-FIT cable (14 wires, Serial links)

Table 37 : Characteristics of serial link RS232_1

Characteristics	Symbols	Conditions	Min.	Typ.	Max.	Unit
See Table 35 : Characteristics of serial link RS232_0						

Figure 21 : Standards signals of serial link RS232_1

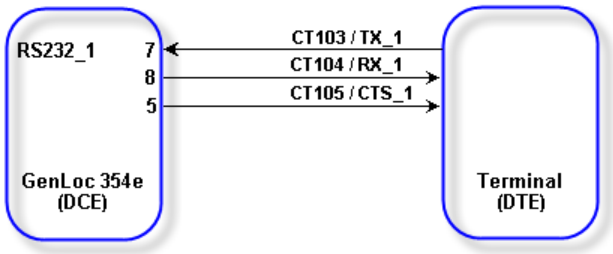

3.15 Serial link RS232_2 / Bus CAN Option

As an option it is possible to have a third serial link

- RS232c - Option ***UART3***, reference ***S0469D***.
- CAN Bus - Option ***MCP2515 CAN Bus***, reference ***S0467D***.

These 2 options cannot be installed simultaneously.

3.15.1 Serial link RS232_2 option S0469B

Table 38 : Pins description of serial link RS232_2

Signal	16-pin Micro FIT connector Pins N°	I/O	RS232 Standards	Description
CT103 / TX_2	2	I	TX	Data transmission
CT104 / RX_2	3	O	RX	Data reception
GND	1			Ground

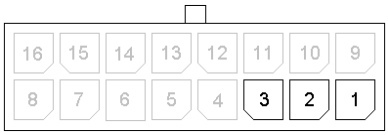

Corresponds to wires
Violet for TX
White/Violet for RX
Black for GND
see ANNEX 3 – 16-pins Micro-FIT cable (14 wires, Serial links)

Table 39 : Characteristics of serial link RS232_2

Characteristics	Symbols	Conditions	Min.	Typ.	Max.	Unit
See Table 35 : Characteristics of serial link RS232_0						

Figure 22 : Standards signals of serial link RS232_2

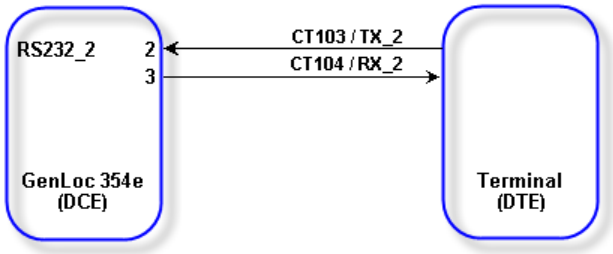

3.15.2 Bus CAN MCP2515 option S0467D

The data transmission is done on a differential wired pair. The line is made up of 2 wires.

Table 40 : Pins description of the link Bus CAN option S0467D

Signal	16-pin Micro FIT connector Pins N°	I/O	CAN Standards	Description
CANH	2	I/O	CAN High	Positive differential line
CANL	3	O/O	CAN Low	Negative differential line
GND	1			Ground

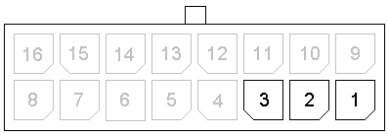

Corresponds to wires
Violet for CANH
White/Violet for CANL
Black for GND
see ANNEX 3 – 16-pins Micro-FIT cable (14 wires, Serial links)

Table 41 : Characteristics of serial link Bus CAN MCP2515 option S0467D

Characteristics	Symbols	Conditions	Min.	Typ.	Max.	Unit
Input Voltage – Low	V_{IL}	Input Voltage – Low	0.6	1.1		V_{DC}
Input Voltage – High	V_{IH}	Input Voltage – High		1.5	3.3	V_{DC}
Input Hysteresis	V_{Hys}	Input Hysteresis		0.1		V_{DC}
Leak current	I_L		±30			µA
Output Short-Circuit Current	I_{OS}				±250	mA
Output voltage	V_{OH}	CANH Dominant	2.45		3.3	V_{DC}
		CANL Dominant	0.5		1.25	V_{DC}
	V_{OL}	CANH Recessive		2.3		V_{DC}
		CANL Recessive		2.3		V_{DC}

Figure 23 : Output signal of bus CAN MCP2515 option S0467D

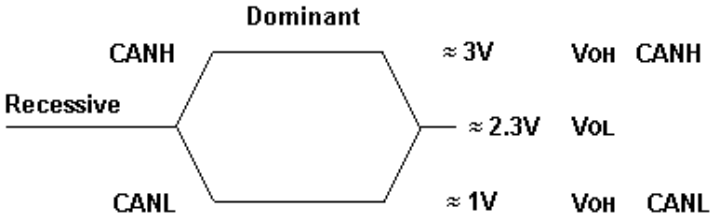

Figure 24 : Standards signals of link Bus CAN MCP2515 option S0467D

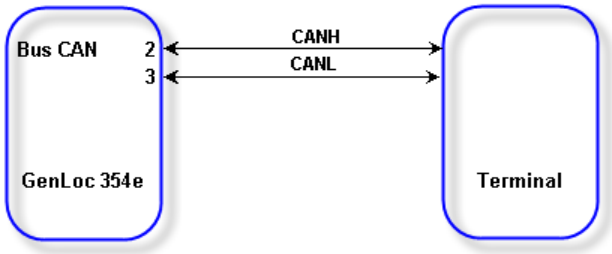

3.16 Power supply Power_Out

This power supply Power_Out is controlled by software

Table 42 : Description of Power_Out

Signal	16-pin connector Pins N°	I/O	Kind of I/O	Description
Power_Out GND	9 12	O	Analog	
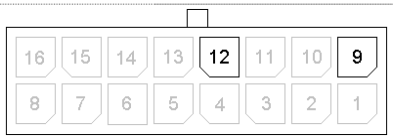		Corresponds to wires White Power_Out Black for GND see ANNEX 3 – 16-pins Micro-FIT cable (14 wires, Serial links)		

Table 43 : Characteristics of Power_Out

Parameters	Condition	Min.	Typ.	Max.	Unit
V_{OUT}	With power supply 8V - 32V @ 1A	6.2		30.5	V_{DC}
R_{OUT}			45	70	mΩ
I_{OUT}				1	A

Figure 25 : Internal electrical scheme of Power_Out

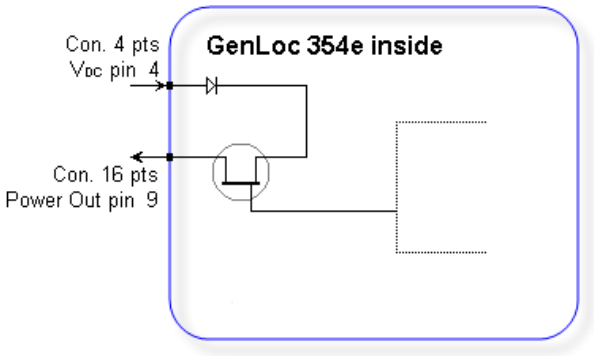

The graph below shows a drop of voltage due to the serial diode and the transistor.

Figure 26 : Drop of voltage

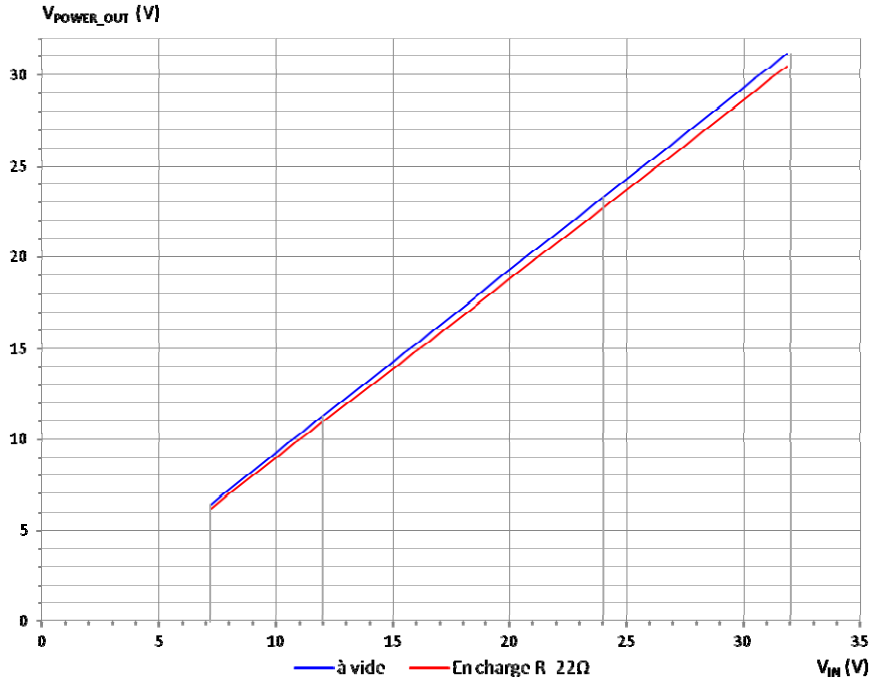

3.17 BOOT

This signal must NOT be connected, NOT used. The use of the BOOT function is strictly reserved for the manufacturer and distributors.

Table 44 : Description of BOOT input

Signal	16-pin connector Pins N°	I/O	Kind of I/O	Description
BOOT GND	11 4	I	SCHMITT	Boot modem
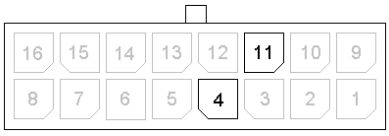		Corresponds to wires Green for BOOT Black for GND see ANNEX 4 – 16-pins Micro-FIT cable (16 wires, Serial links, Boot and Reset)		

Table 45 : Conditions of use of BOOT signal

Parameters	Conditions	Min.	Typ.	Max.	Unit
VIL	Input Voltage – Low	-0.3		0.8	V_{DC}
VIH	Input Voltage – High	2		3.3	V_{DC}
RIPU	Internal Pull-Up Resistor		5.38K		Ω

Figure 27 : Internal electrical scheme of BOOT

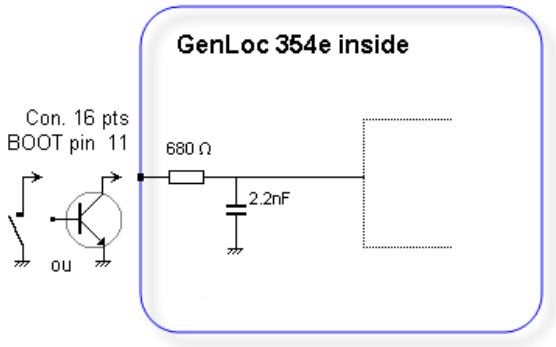

The use of the BOOT signal must be done through a transistor assembly or via dry contact. The integrator has the responsibility to protect the input from electrical perturbations and to respect the functioning parameters values.

3.18 RESET

The use of the RESET function is strictly reserved for the manufacturer and distributors.
This signal must be used only in case of emergency RESET. A software RESET is always preferable to a Hardware RESET. It is strongly unadvised to execute this function whilst in communication or dialog, without having previously detached it from the operator network.
Using the RESET does not restore the factory parameters.

Table 46 : Description of RESET input

Signal	16-pin connector Pins N°	I/O	Kind of I/O	Description
RESET GND	10 4	I	SCHMITT	Reset modem
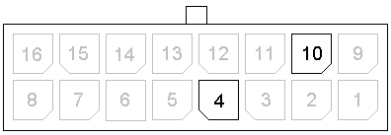	Corresponds to wires Orange for RESET Black for GND see ANNEX 4 – 16-pins Micro-FIT cable (16 wires, Serial links, Boot and Reset)			

Table 47 : Conditions of use of RESET signal

Parameters	Conditions	Min.	Typ.	Max.	Unit
V_{IL}	Input Voltage – Low	-0.3		0.8	V_{DC}
V_{IH}	Input Voltage – High	2		3.3	V_{DC}
RIPU	Internal Pull-Up Resistor		5.38K		Ω

Figure 28 : Internal electrical scheme of RESET

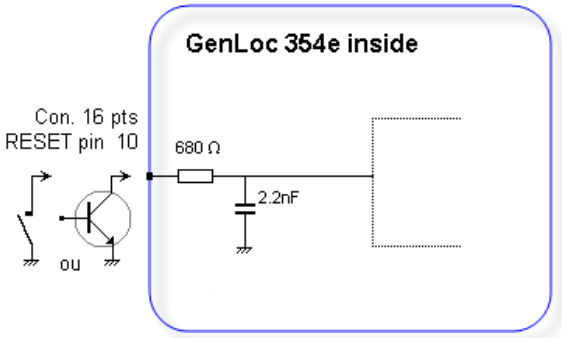

The use of the RESET signal must be done through a transistor assembly or via dry contact .
The integrator has the responsibility to protect the input from electrical perturbations and to respect the functioning parameters values.

Figure 29 : Chronogram of RESET signal

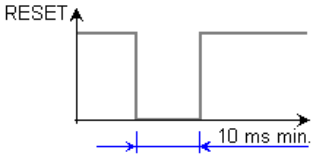

3.19 Accelerometer

The GenLoc 354e provides an accelerometer with 3 axis of sensitivity ±2G or ±8G controllable by software.

Table 48: Characteristic of accelerometer

Parameters	Conditions	Min.	Typ.	Max.	Unit
Range	Controllable by software	± 2	± 2,3		g
		± 8	± 9,2		
Resolution			8		bits
Sensitivity	Range ± 2G	16,2	18	19,8	mg/digit
	Range ± 8G	64,8	72	79,2	
Typical zero-g level offset accuracy	Range ± 2G		±40		mg
	Range ± 8G		±60		

Figure 30 : Positioning of the accelerometer axis

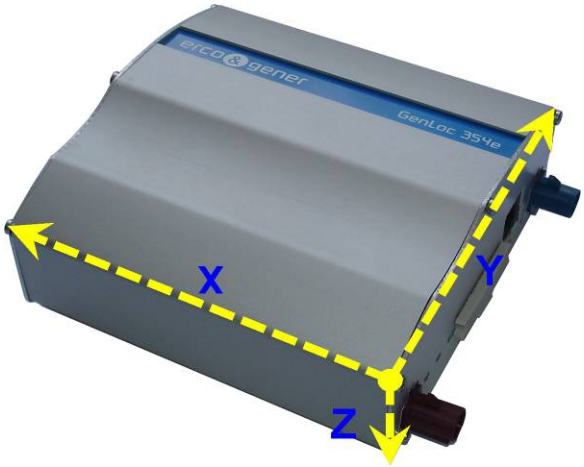

3.20 SIM card

Table 49: Characteristics of the SIM card power voltage

SIM card	3 V or 1.8 V
Format	standard

3.21 Dual SIM option – S0471C

As an option it is possible to have a 2nd SIM reader.

- Option ***DUAL SIM*** reference ***S0471C***.

This SIM card is internal only.
The access can be done after removing the rear panel.
See Information Note EG_GenLocPro54e_1040_IN000_xxx_yy.

Table 50: Characteristics of the 2nd SIM card power voltage

SIM card	3 V or 1.8 V
Format	standard

3.22 Leds of the modem

Figure 31 : Back side Leds

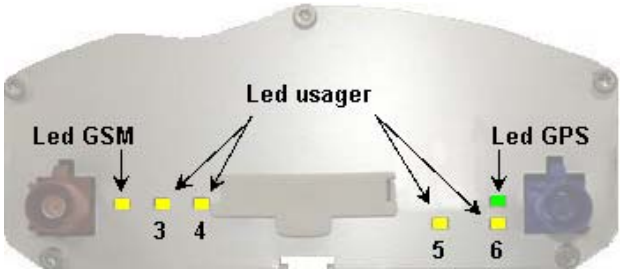

3.22.1 GSM Led

3.22.1.1 Without application

The GenLoc 354e does not contain any application. The Led is OFF.

3.22.1.2 With standard library EGM

The GenLoc 354e contains the standard library. The Led is OFF.

3.22.1.3 The application ERCOGENER EaseLoc_Vx

The status of the GSM module is indicated by the status of the YELLOW GSM LED situated on the back side of the modem. This is the yellow LED situated on the left.

Table 51: Status of GSM LED

Status of GSM LED	LED activity	GSM status
OFF	LED OFF	The module is not activated or OFF.
ON	LED permanent	The module is attaching to GSM network.
LED flashing	0.5s ON / 1.5s OFF	The module is attached to the GSM network.
LED flashing	0.2s ON / 0.6s OFF	The module is in data, voice or GPRS communication.

3.22.1.4 Owner application

The GenLoc 354e contains your application. The Led status depends on your parameters.

Descriptions and non-contractual illustrations in this document are given as an indication only.
ERCOGENER reserves the right to make any modifications.

3.22.2 User Led

These Leds are free. They are left at the disposal of the user.

If the GenLoc 354e has the standard EGM library (see the documents "EG_EGM_CL_xxx_yy" of ERCOGENER), they can be controlled via AT command.

	n	AT+GPIOEXTSET=n,1	AT+GPIOEXTSET=n,0
Led 3	57	Led ON	Led OFF
Led 4	56		
Led 5	55		
Led 6	54		

Example AT+GPIOEXTSET=56,1 to turn ON the Led 4
AT+GPIOEXTSET=56,0 to turn OFF the Led4

3.22.3 GNSS Led

The positioning status of the modem is indicated by the status of the GREEN GNSS LED situated on the back side. This is the green LED situated on the right.

Table 52: Available status of GNSS LED

LED activity	GNSS status
LED OFF	The GNSS is not activated or the GNSS is searching for satellites.
LED flashing	The GNSS is synchronized with different satellites. It has found its position.

Descriptions and non-contractual illustrations in this document are given as an indication only.
ERCOGENER reserves the right to make any modifications.

4 GSM external antenna

The GSM external antenna is connected to the modem via the FAKRA-D connector.

The external antenna must respond to the characteristics described in the table below.

Figure 32 : GSM external antenna

Table 53 : Characteristics of GSM external antenna

Frequency band		
900	880..960 MHz	
1800	1710..1880 MHz	
2100	1920..2170 MHz	
Impedance	50 Ohms nominal	
Input power	> 2 W peak	
Gain	< 4.25 dBi for 850 MHz < 7.55 dBi for 1700 MHz < 2.74 bBi for 1900 MHz	
VSWR	< 2:1 recommended	< 3:1 acceptable
Return Loss	S_{11}<-10 dB recommended	S_{11}<-6 dB acceptable

See § 7 Recommended accessories , for the GSM antennas recommended by ERCOGENER.

5 GNSS external antenna

The GNSS external antenna is connected to the modem via the FAKRA-C connector (Blue).

The external antenna must respond to the characteristics described in the table below.

Figure 33 : GNSS external antenna

Table 54 : Characteristics of GNSS external antenna

Frequency	GPS 1575.42 MHz GLONASS 1602 – 1614.94 MHz
Impedance	50 Ohms nominal
Antenna gain	50 dB max
Maximum noise figure	≤ 1.5 dB
VSWR	≤ 2:1
Polarization	RHCP
Power supply voltage	3.2V
Power supply current (max)	50mA

See § 7 Recommended accessories , for the GNSS antennas recommended by ERCOGENER.

5.1 Installation of GNSS external antenna

The quality of the GNSS signal received depends on the quality of installation of the antenna. To obtain an optimal signal, some rules have to be respected:

- Place the antenna horizontally, dome towards the top and preferably outside the vehicle,
- Do not place the antenna under athermic windscreens,
- Do not place the antenna under metallic surfaces

Figure 34 : Recommended installation of GNSS antenna

Figure 35 : Installation of GNSS antenna not recommended

This installation does not prevent the functioning of the GNSS but highly reduces its performances.

6 Use of the modem

6.1 Specific recommendations for the use of the modem in vehicles

The power supply connector of the modem GenLoc 354e must NEVER be connected directly to the battery of the vehicle.

6.1.1 Recommended connection on the battery of a truck

All trucks have a circuit breaker outside the cabin. The circuit breaker is used for security reasons:

The circuit breaker is connected to the ground of the truck, usually connected to the fuse box.

Most of truck circuit breakers do not cut the **+** '**PLUS**' of the battery, but cut its '**GROUND**'.

Figure 36 : Recommended connection on the battery of a truck

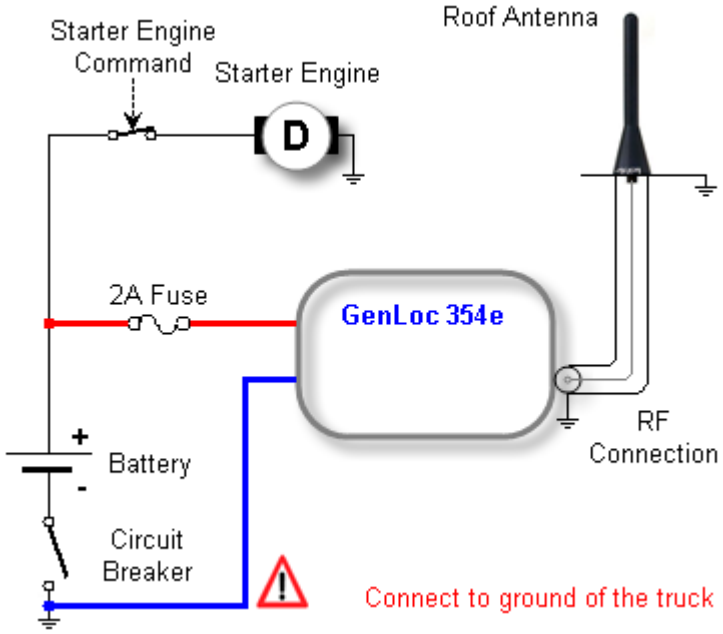

The scheme above shows a recommended power connection where the connection of the modem ground is not directly connected to the battery, but connected after the circuit breaker (on the ground of the truck or in the fuse box).

If this scheme is not respected, the modem can be damaged when starting the truck if the circuit breaker is open. It cannot support important starting currents.

6.2 Turning the modem OFF

The modem contains the EGM standard library (see the documents "EG_EGM_CL_xxx_yy" of ERCOGENER); in this case, it is strongly advised to un-register from the network with the command **AT+COPS=2**

There is no particular action to do on the GNSS part before turning the modem OFF.

When the battery is present, a mechanism allows to stop completely the application if the external power supply is unplugged, and also to prepare the modem for storage or transport, in order to limit high discharges of the battery.
If the device is not used, it has to be deactivated by sending the following command:

- **If the modem has an application developed with EGM**
  Disconnect the external power supply of the modem.
  And send the command ***AT+GPIOSET=35,0***
- **If the modem does not contain any embedded application**, via the Boot-Loader menu

```
Bootloader V4.09 GL54 UA Gener Ublox (HWF1 rev D/E)
GSM voltage = 4330 mV
 1 - Update application
 2 - Erase objects
 M - GSM direct access (external supply required)
 A - Advanced
 P - Power off
 E - Exit
```

  Disconnect the external power supply of the modem.
  And **Enter "P"**

Important note: The switching of the battery and its auto-maintain will be automatically reactivated once the modem will be plugged again to its external power supply.

6.3 Starting with the modem

6.3.1 Mounting the modem

To mount the modem on a support, use the fixing brackets as described below.

Figure 37 : Mounting the modem

- Must be fixed on a flat surface
- Max. height of the screw head: 7 mm

The aluminium casing of the modem is connected to the 0V (GND) of the power supply and to the 0V of the RS232 serial link. To avoid any risk of conduction of the ground plane to other equipment, the modem must be electrically insulated from its mechanical support.

6.3.2 SIM card installation

To install the SIM card, it is recommended to do the following operations with the modem turned OFF:

- Remove the SIM card cover on the back side.
- Carefully insert the SIM card into the reader.

Figure 38 : Installation of the modem

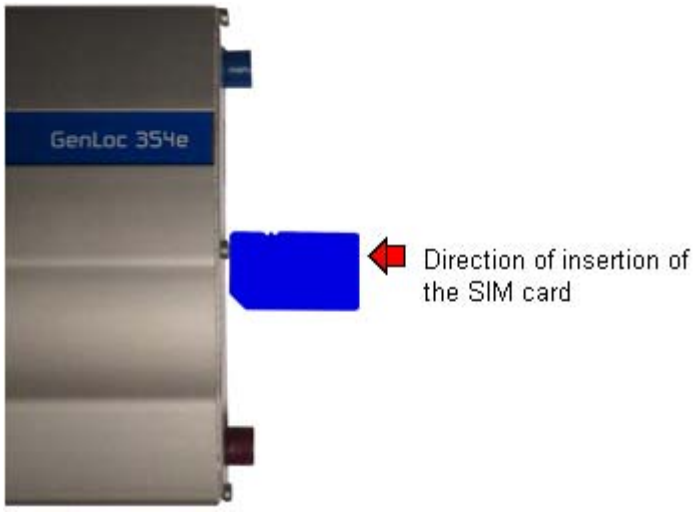

- Push the SIM card until hearing a "clic" that ensures its correct positioning.
- Put the SIM cover back.

6.4 Use of the modem

- Install the SIM card.
- Connect the GSM antenna to the FAKRA-D connector (brown).
- Connect the GNSS antenna to the FAKRA-C connector (blue).
- For the connection to the DTE, connect the V24 link via the 9-pin Sub D cable.
- Connect the power cable to the continuous and regulated external power source (for an automobile application, see § 6.1 Specific recommendations for the use of the modem in vehicles).
- Connect the power cable to the modem.
- Use a communication software like Windows HyperTerminal ® set as follows:
  - Bits per second .....: 115 200 bps,
  - Data Bits.....: 8,
  - Parity .....: Sans,
  - Stop Bits.....: 1,
  - Flow control .....: none.

6.4.1 Checking the communication with the modem

6.4.1.1 Without application

The GenLoc 354e does not contain any application; it will return the menu of the BootLoader.

Menu by default when there is no application inside the equipment (example of display)

```
Bootloader V4.09 GL54 UA Gener Ublox (HWF1 rev D/E)
GSM voltage = 4325 mV
 1 - Update application
 2 - Erase objects
 M - GSM direct access (external supply required)
 A - Advanced
 P - Power off
 E - Exit
```

In the case where no communication can be established with the modem:

- Check the RS232 connection between the DTE and the modem (DCE),
- Check the configuration of the COM port of the DTE.

Descriptions and non-contractual illustrations in this document are given as an indication only.
ERCOGENER reserves the right to make any modifications.

6.4.1.2 Standard Library

The GenLoc 354e contains the standard library.

Example of display when the standard library is present inside the equipment

```
************************************************************
00:00:00  flash_start_flash: new Flash handle - WAIT
00:00:00  EGM_INIT_SOFTWARE_RESET
00:00:00  Ext2: EGM_FCM_EVENT_FLOW_OPENNED
00:00:00  READY
00:00:00  Gprs_Call_State : GPRS_CALL_INIT
00:00:00  UTC Time field not valid
00:00:00  Date field not valid
00:00:01  Supply status: External supply connected
00:00:02  Analog input 3 State H
00:00:02  sim inserted
00:00:02  PIN code not required
00:00:02  GSM Ready
00:00:03  +CCLK: "12/07/30,09:29:45+00"
00:00:03  Got GSM clock info
00:00:03   *** IMEI: 358696048201787, product: "GenLoc54e"
EaseLoc V300b2_EGM403b24 - GenLoc54e - LEON-G100-06S-00 - Thu Jun 21 09:18:01
2012
00:00:03  PHB Ready
00:00:03  sim ready
00:00:07  SMS Ready
00:00:09  Network ready
00:00:09  network_gprs_state: 1
00:00:23  CREG OK : 1
```

Send the command AT+EGM3

The modem returns the version of the library

```
+EGM3: genapi V4.04, Date: Thu Nov 15 13:57:42     2012
```

In the case where no communication can be established with the modem:

- Check the RS232 connection between the DTE and the modem (DCE),
- Check the configuration of the COM port of the DTE

For more information about these AT commands and their associated parameters, see the documents "Commands List EG_EGM_CL_xxx_yy" of ERCOGENER.

6.4.1.3 The application ERCOGENER EaseLoc_Vx

The GenLoc 354e contains the application EaseLoc_Vx.

Send the command ATI8. The modem returns the version (example of display)

```
EaseLoc V300b2_EGM403b24 – GenLoc354e - LEON-G100-06S-00 - Thu Jun 21 09:18:01
2012
```

For more information about these AT commands and their associated parameters, see the documents "Commands List EG_EaseLoc_Vx_CL_yyy_UK" of ERCOGENER.

Descriptions and non-contractual illustrations in this document are given as an indication only.
ERCOGENER reserves the right to make any modifications.

6.4.1.4 The owner application

The GenLoc 354e contains your application.

Set the RS232 port of the DTE according to your parameters (speed, data bits, parity and stop bit).

Check the display and the dialogue with the GenLoc 354e according to your own characteristics.

6.5 Checking the quality of the GSM reception signal

The modem contains the EGM standard library (see the documents "EG_EGM_CL_xxx_yy" of ERCOGENER); in this case, the modem will be able to make a call only if the received GSM signal is powerful enough.

The command ***AT+CSQ*** allows to know the reception level (***rssi***) of the signal sent by the closest GSM Base Transceiver Station (BTS), as well as the reception error code (*g*).

When the SIM card is inserted and the PIN code entered, the command ***AT+CSQ*** allows to measure the signal from the BTS of the subscribed operator network.

This command cannot be used without the SIM card.

To check the quality of the GSM signal, do the following operations:

Use a communication software like Hyperterminal, enter the command *AT+CSQ*.

The response is in the following format:

+CSQ : <rssi>, <ber> with:

<***rssi***> = indicates the reception level,

<***ber***> = receive bit error rate.

Check the returned value <***rssi***> with the help of the table below.

Table 55 : RSSI value

Value of <*rssi*>	Gain in dbm	Interpretation	Value of <*ber*>	Interpretation
0	-113 dbm	Insufficient	0 to 7	See Standards ETSI GSM 05.08
1 to 10	-111 to -95 dbm	Insufficient		
11 to 30	-93 to -53 dbm	Sufficient		
31 (max)	-51dbm	Perfect		
99		Unknown/not detectable	99	Unknown/not detectable

The GSM modem works normally with a minimum <***rssi***> between 11 and 15.

Below 10, the signal level is insufficient; the modem cannot work depending on the geographical situation or the vehicle mobility. Above 15, the signal is sufficient.

For more information about the AT commands, see the document "EG_EGM_CL_xxx_yy" of ERCOGENER.

Descriptions and non-contractual illustrations in this document are given as an indication only.
ERCOGENER reserves the right to make any modifications.

6.6 Verification of the PIN code

The modem contains the EGM standard library (see the documents "EG_EGM_CL_xxx_yy"of 'ERCOGENER); in this case, the PIN code is necessary to make a call or to accept a response coming from the GSM network. This code is held in the SIM card and can be modified by the user.

To check that the PIN code has been entered, use a communication software like Hyperterminal, and enter the command ***AT+CPIN?***

The table below shows the main responses given by the modem:

Table 56 : Verification of PIN code

Command	Response	Interpretation
AT+CPIN?	**+CPIN : ERROR**	The SIM card is absent or not recognized
	+CPIN : READY	The PIN code is correct
	+CPIN : SIM PIN	The PIN code is wrong or not entered yet
	+CPIN : SIM PUK	The PUK code is required

For more information about the AT commands, see the document "EG_EGM_CL_xxx_yy" of ERCOGENER.

6.7 Verification of the modem registration on GSM network

The modem contains the EGM standard library (see the documents "EG_EGM_CL_xxx_yy" of ERCOGENER); in this case:

1. Make sure that a valid SIM card is inserted in the SIM card reader of the modem.
2. Use a communication like Hyperterminal, and enter the following AT commands:
   a. ***AT+CPIN="xxxx"*** to enter the PIN code. The user has only 3 attempts to enter the PIN code. After the third attempt, only a second code (code PUK) supplied by the operator, will allow you to choose a new PIN code.
   b. ***AT+CREG?*** to check the registration status on the network. The response will be of the following format: +***CREG*** *:* <***mode***>, <***stat***> with:

   <***Mode***> = configuration of the registration message not solicited,

   <***Stat***> = registration status.
3. Check the registration status according to the value returned in the table below.

Table 57 : Verification of modem registration on GSM network

Command	Response	Interpretation
AT+CREG?	**+CREG : 0,0**	The modem is not recognized by the network.
	+CREG : 0,2 or 0,3	The modem is searching for a network operator.
	+CREG : 0,1	The modem is attached in GSM to the local operator.
	+CREG : 0,5	The modem is attached in GSM to the roaming operator.

Descriptions and non-contractual illustrations in this document are given as an indication only.
ERCOGENER reserves the right to make any modifications.

If the modem is not registered: check the connection between the modem and the antenna or the reception level of the signal (cf. paragraph 6.5 Checking the quality of the GSM reception signal).

For more information about AT commands, see the document "EG_EGM_CL_xxx_yy" of ERCOGENER.

6.8 Verification of the modem registration on GPRS network

The modem contains the EGM standard library (see the documents "EG_EGM_CL_xxx_yy" of ERCOGENER); in this case:

1. Make sure that a valid SIM card is inserted in the SIM card reader of the modem.
2. With a communication software like Hyperterminal, enter the following AT commands:
   a. ***AT+CPIN="xxxx"*** to enter the PIN code. The user has only 3 attempts to enter the PIN code. After the third attempt, only a second code (code PUK) supplied by the operator, will allow you to choose a new PIN code.
   b. ***AT+CGREG?*** to check the registration status on the network. The response will be of the following format: +***CGREG*** *:* <***mode***>, <***stat***> with:

   <***Mode***> = configuration of the registration message not solicited,

   <***Stat***> = registration status.
3. Check the registration status according to the value returned in the table below.

Table 58 : Verification of the modem registration on GPRS network

Command	Response	Interpretation
AT+CREG?	**+CGREG : 0,0**	The modem is not recognized by the network.
	+CGREG : 0,2 or 0,3	The modem is searching for a network operator.
	+CGREG : 0,1	The modem is attached in GPRS to the local operator.
	+CGREG : 0,5	The modem is attached in GPRS to the roaming operator.

If the modem is not registered: check the connection between the modem and the antenna or the reception level of the signal (cf. paragraph 6.5 Checking the quality of the GSM reception signal).

For more information about the AT commands, see the document "EG_EGM_CL_xxx_yy" of ERCOGENER.

Descriptions and non-contractual illustrations in this document are given as an indication only.
ERCOGENER reserves the right to make any modifications.

6.9 Reading a current position given by the GNSS

The modem contains the EGM standard library (see the documents "EG_EGM_CL_xxx_yy" of ERCOGENER); in this case, the reading of a GNSS position can be done with the command ***AT+GPSPOS***. This command allows to get the information received of the current position. After powering ON the modem, an acquisition time is necessary (around 45 seconds).

The response is in the following format and the table shows examples of responses:

+GPSPOS:<fix>,<time>,<date>,<latitude>,<longitude>,<altitude>,<hdop>,<speed>,<direction>,<nbsat>

<**fix**>
0 invalid fix
1 2D fix
2 3D fix
-1 impossible to define a position

<***time***> : hhmmss.zz
example: 083205.00 -> 8 hours 32 minutes 05 seconds et 00 hundredth of a second in UTC

<***date***> : ddmmyy
example: 180406 -> 18 April 2006

<***latitude***> : ddmm.mmmmm(N/S)
dd (degree) 00 to 90
mm.mmmmm (minute) 00,00000 to 59,99999
N/S North or South
example: 4716.81310N -> latitude 47 degrees 16,81310 minutes North

<***longitude***> : dddmm.mmmmm(E/W)
ddd (degree) 00 to 180
mm.mmmmm (minute) 00,00000 to 59,99999
E/W East or West
example: 00003.51202W -> longitude 0 degree 0 3,51202 minutes West

<***altitude***> : mmmm.m in meter

<***hdop***> : mmm.mm horizontal dilution position in meters

<***speed***> : ssss.s ground speed in km/h

<***cap***> : dddmm.mmmm
ddd (degree) 000 to 360
mm.mmmm (minute) 00,0000 to 59,9999

<***nbre sat***> : nn number of satellites seen

Descriptions and non-contractual illustrations in this document are given as an indication only.
ERCOGENER reserves the right to make any modifications.

The following table shows examples of responses returned by this command.

Table 59 : Reading a current position given by the GNSS

Command	Response	Interpretation
AT+GPSPOS	**+GPSPOS:-1,,,,,,,,,0**	It is not possible to define a position. Check the positioning of the GNSS antenna or the GNSS configuration (see § 5.1 Installation of GNSS external antenna)
	+GPSPOS:0,083138,180406,,,,,,,6	It is not yet possible to have a position but the time and date information are available. A complete frame should be obtained soon or the antenna position is not optimum (see § 5.1 Installation of GNSS external antenna)
	+GPSPOS:2,100237.00,300712,4716.80331 N,00003.51675W,77.5,1.05,0.305,,08	A position is read and all information is available. The frame is considered as complete. The GNSS LED is flashing.

Descriptions and non-contractual illustrations in this document are given as an indication only.
ERCOGENER reserves the right to make any modifications.

7 Recommended accessories

The accessories recommended by ERCOGENER for the modem GenLoc 354e are described on our website in the section Products/Accessories. For more information, please contact our sales department.

8 Client support

ERCOGENER ensures the client support for all its modems sold. You will then have access to:

- The latest version of this document
- The datasheet of the product
- The latest versions of the OS user guides
- Certificates
- Application notes

The support for the EGM developments is proposed as an option (contact us).

ANNEX 1 – 4-pins Micro-FIT cable (4 wires, Power supply)

(ERCOGENER reference: 4402304215)

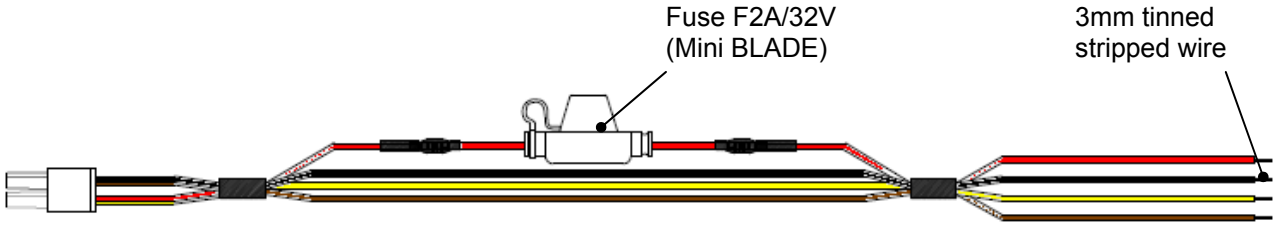

Figure 39 : 4-pins Micro-FIT cable

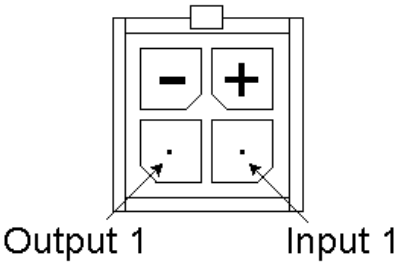

Table 60 : Characteristics of power supply cable

Component	Characteristics
4-pin connector	
Cable	Length ≈ 1.5m
Wire	Section : 0.75 mm²
Fuse	FK2A - 32V

Signal	Color
$+V_{DC}$	Red
GND	Black
INPUT 1 (E1)	Yellow
OUTPUT 1 (S1)	Brown

Fuse reference: Mini Blade for automobile 2A - 32V (color code: grey)

Figure 40 : Fuse Mini Blade

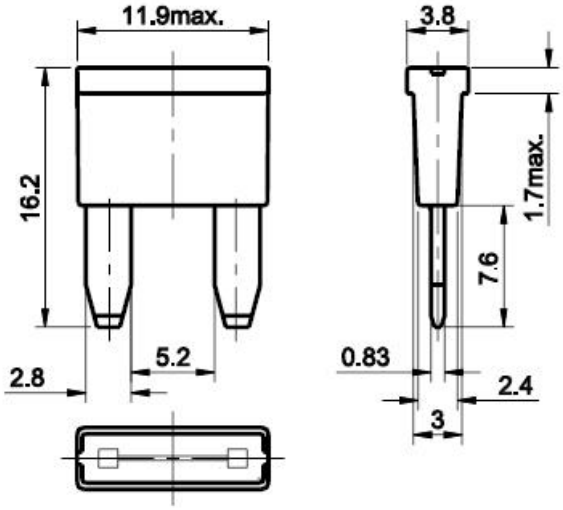

ANNEX 2 - 14-pins Micro-FIT cable (Inputs/Outputs)

(ERCOGENER reference: 4402314215)

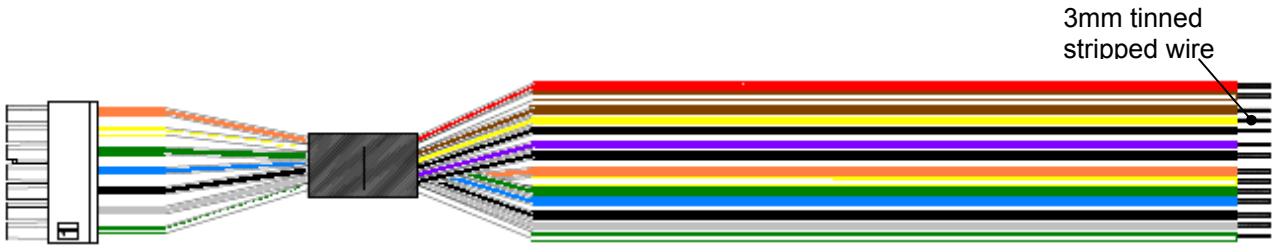

Figure 41 : 14-pin Micro-FIT cable (Inputs/Outputs)

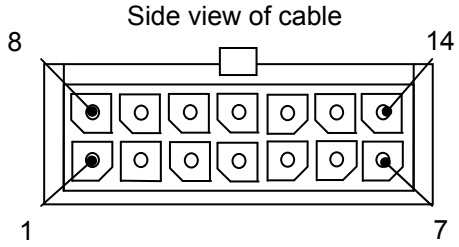

Table 61 : Characteristics of 14-wire inputs/outputs cable

Component	Characteristics
14-pin connector	
Cable	Length ≈ 1.5m
Wire	Section : 0.5 mm²

Table 62 : Wiring of the 14-wire inputs/outputs cable

Pin N°	Signal	Color
1	ONE_WIRE	White/Green
2	ANA2	Grey
3	E5-	Black
4	E5+	Blue
5	E4	Green
6	S3	White/Yellow
7	+ 4.8 V	Orange
8	GND	Black
9	ANA1	Violet
10	E3-	Black
11	E3+	Yellow
12	E2	Brown
13	S2	White/Brown
14	BUZZER	Red

Descriptions and non-contractual illustrations in this document are given as an indication only.
ERCOGENER reserves the right to make any modifications.

ANNEX 3 – 16-pins Micro-FIT cable (14 wires, Serial links)

(ERCOGENER reference: 4404314215)

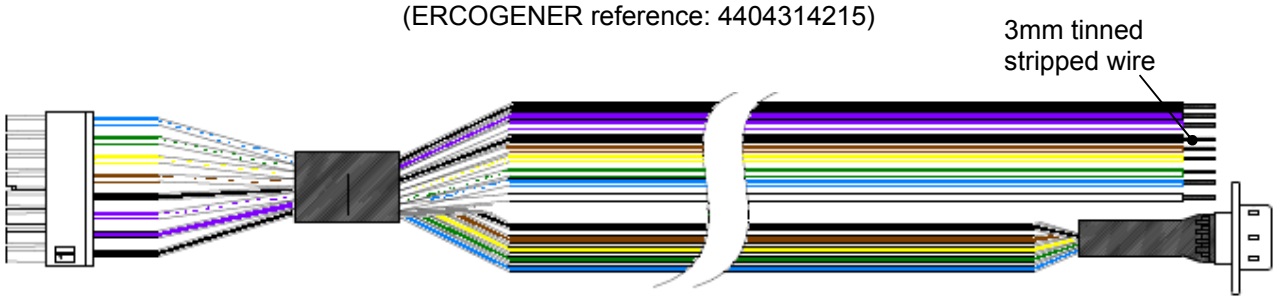

Figure 42 : 16-pins Micro-FIT cable (Serial links)

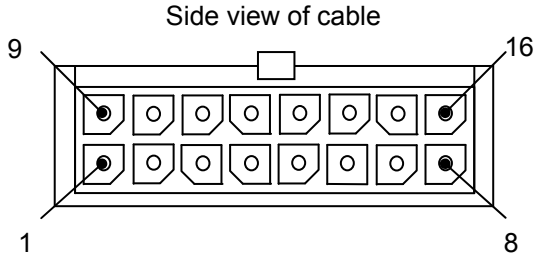

Table 63 : Characteristics of 14-wires serial links cable

Component	Characteristics
16-pin connector	
Cable	Length ≈ 1.5m
Wire	Section : 0.5 mm²
Sub D 9 pin female	

Table 64 : Wiring of 14-wires serial links cable

Pin N°	Signal	Color	Sub D 9 pin
1	GND	Black	---
2	TX_2 or CANH	Violet	---
3	RX_2 or CANL	White/Violet	---
4	GND	Black	---
5	CTS_1	White/Brown	---
6	Compatible K-Line	White/Yellow	---
7	TX_1	White/Green	---
8	RX_1	White/Blue	---
9	POWER_OUT	White	---
10	RESET	---	---
11	BOOT	---	---
12	GND	Black	5
13	CTS_0	Brown	8
14	RTS_0	Yellow	7
15	TX_0	Green	3
16	RX_0	Blue	2
	---	---	9
	---	---	6
	---	---	4
	---	---	1

Descriptions and non-contractual illustrations in this document are given as an indication only.
ERCOGENER reserves the right to make any modifications.

ANNEX 4 – 16-pins Micro-FIT cable (16 wires, Serial links, Boot and Reset)

(ERCOGENER reference: 4402316215)

As an option, a 16-wire cable can be provided. It is the same as the previous one but provides also the "Boot" and "Reset" inputs. These cables have a 30 cm length.

This cable is already included with the EGM development kits.

Figure 43 : 16-wire Micro-FIT cable (Serial links, Boot and Reset)

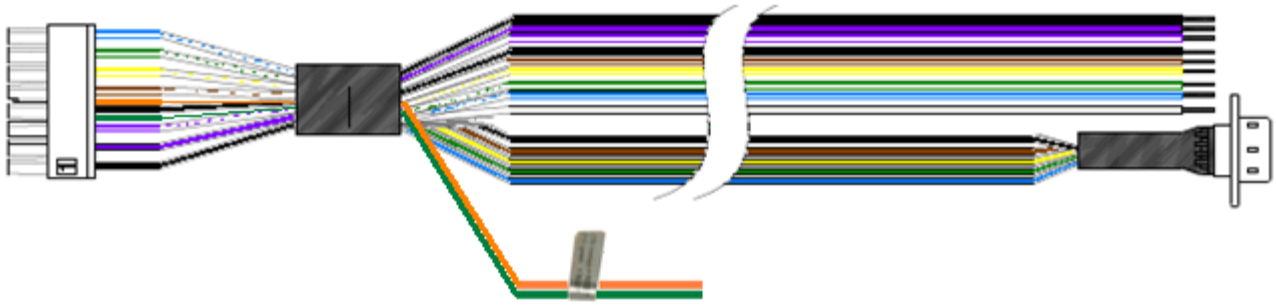

Table 65 : Characteristics of the 16-wires serial links cable (Boot + Reset)

Component	Characteristics
16-pin connector	
Cable	Length ≈ 0.3m
Wire	Section : 0.5 mm²

Table 66 : Wiring of the 16-wires serial links cable (Boot + Reset)

Pin N°	Signal	Color	Sub D 9 pin
10	RESET	Orange	---
11	BOOT	Green	---

Descriptions and non-contractual illustrations in this document are given as an indication only.
ERCOGENER reserves the right to make any modifications.

ANNEX 5 - Abbreviations

AC	Alternative Current
ACM	Accumulated Call Meter
AMR	Adaptive Multi-Rate
AT	Attention (prefix for modem commands)
BTS	Base Transceiver Station
CLK	ClocK
CMOS	Complementary Metal Oxide Semiconductor
CS	Coding Scheme
CTS	Clear To Send
dB	Decibel
dBc	Decibel relative to the Carrier power
dBi	Decibel relative to an Isotropic radiator
dBm	Decibel relative to one milliwatt
DC	Direct Current
DCD	Data Carrier Detect
DCE	Data Communication Equipment
DCS	Digital Cellular System
DSR	Data Set Ready
DTE	Data Terminal Equipment
DTMF	Dual Tone Multi-Frequency
DTR	Data Terminal Ready
EDGE	Enhanced Data rates for Global Evolution
EEPROM	Electrically Erasable Programmable Read-Only Memory
EFR	Enhanced Full Rate
EGM	Erco Gener Middleware
E-GSM	Extended GSM
EMC	ElectroMagnetic Compatibility
EMI	ElectroMagnetic Interference
ESD	ElectroStatic Discharges
ETSI	European Telecommunications Standards Institute
FIT	Series of connectors (micro-FIT)
FR	Full Rate
FTA	Full Type Approval
FTP	File Transfert Protocol
GCF	Global Certification Forum
GND	GrouND
GNSS	Global Navigation Satellite System
GPIO	General Purpose Input Output
GPRS	General Packet Radio Service
GPS	Global Positioning System
GSM	Global System for Mobile communications
HR	Half Rate
HSDPA	High Speed Downlink Packet Access
HSPA	High Speed Packet Access
HSUPA	High Speed Uplink Packet Access
I	Input
IEC	International Electrotechnical Commission
IMEI	International Mobile Equipment Identification
I/O	Input / Output
LED	Light Emitting Diode
LLC	Low Level Command
MAX	MAXimum
ME	Mobile Equipment

Descriptions and non-contractual illustrations in this document are given as an indication only.
ERCOGENER reserves the right to make any modifications.

MIC	MICrophone
Micro FIT	Family of connectors from Molex
MIN	MINimum
MNP	Microcom Networking Protocol
MO	Mobile Originated
MS	Mobile Station
MT	Mobile Terminated
NOM	NOMinal
O	Output
Pa	Pascal (for speaker sound pressure measurements)
PBCCH	Packet Broadcast Control Channel
PC	Personal Computer
PCL	Power Control Level
PDP	Packet Data Protocol
PIN	Personal Identity Number
PLMN	Public Land Mobile Network
PUK	Personal Unblocking Key
RF	Radio Frequency
RFI	Radio Frequency Interference
RI	Ring Indicator
RMS	Root Mean Square
RTS	Request To Send
RX	Receive
SIM	Subscriber Identification Module
SMA	SubMiniature version A RF connector
SMB	SubMiniature version B RF connector
SMS	Short Message Service
SNR	Signal-to-Noise Ratio
SNTP	Simple Network Time Protocol
SPI	Serial Peripheral Interface
SPL	Sound Pressure Level
SPK	SpeaKer
SRAM	Static RAM
TCP/IP	Transmission Control Protocol / Internet Protocol
TDMA	Time Division Multiple Access
TU	Typical Urban fading profile
TUHigh	Typical Urban, High speed fading profile
TX	Transmit
TYP	TYPical
UMTS	Universal Mobile Telecom System
UTC	Universal Time Clock
VSWR	Voltage Stationary Wave Ratio
WCDMA	Wideband Code Division Multiple Access

Descriptions and non-contractual illustrations in this document are given as an indication only.
ERCOGENER reserves the right to make any modifications.

ercogener

L'esprit Modem

DECLARATION OF CONFORMITY

Manufacturer : **ERCOGENER**

Address : Z.I de Saint Lambert des Levées
B.P. 30163
49412 SAUMUR CEDEX – France

Website : http://www.ercogener.com

declares that the product :

Name : GenLoc 354e Family : 1040Q
Type : Modem

Complies with :

- R&TTE 1999/5/EC Directive,
- EN301489-1:V1.8.1
- EN301489-7:V1.3.1
- Compliant with the requirements of the ECE R10 rev4
- EN 301 511 v9.0.2
- EN 60950-1:2006 + A11:2009
- EN50385 :2002
- ROHS Compliant : Directive 2011/65/EU.
- REACH N°1907/2006 SVHC163

CE

The corresponding markings appear under the appliance.

Saumur, October, 20th 2015

Eric GUÉNEUGUÈS
Quality Manager