erco & gener

L'esprit Modem

User Guide

GenLoc 54e

Reference : EG_GenLoc54e_1040_UG_000_UK

Revision : 000

Date : 04/10/2012

S.A. ERCO & GENER – ZI de St. Lambert-des-Levées – BP 30163 – F-49412 SAUMUR Cedex
Tél. : +33 (0)2 41 83 13 00 – Fax : +33 (0)2 41 67 19 20 – www.ercogener.com – infos@ercogener.com
SA CAPITAL 200873 € – R.C. SAUMUR B 332 174 820 – SIRET 332 174 820 00032 – NAF 2630Z – TVA Intra : FR 16 332 174 820

Document History

Rev.	Modifications	Author	Date	Validation	Date
000	Creation	YST	04/10/2012	PBR	19/12/2012

The main modifications of this document compared to the previous version are easily identifiable on the screen by the blue color of the text.

Descriptions and non-contractual illustrations in this document are given as an indication only.
ERCO & GENER reserves the right to make any modification.

TABLE OF CONTENTS

1 REFERENCES 14
1.1 REFERRED DOCUMENTS 14
1.2 ABBREVIATIONS 14
1.3 SYMBOLS 16
2 PACKAGING 16
2.1 CONTENT 16
2.2 MODEM PACKAGING 17
2.3 MODEM LABEL 17
3 GENERAL PRESENTATION 18
3.1 DESCRIPTION 18
3.1.1 Front side 18
3.1.2 Back side 18
3.1.3 Fixing brackets 19
3.2 EXTERNAL CONNECTIONS 20
3.2.1 Connections 20
3.2.1.1 Antenna connectors 20
3.2.1.2 Micro FIT connectors 20
3.2.1.3 Audio connector 23
3.2.2 Cables 23
3.2.2.1 4-pin Micro-FIT cable 23
3.2.2.2 14-pin Micro-FIT cable (Inputs/Outputs) 25
3.2.2.3 14-wire Micro-FIT cable (Serial links) 26
3.2.2.4 16-pin Micro-FIT cable (Serial links, Boot and Reset) 28
4 CHARACTERISTICS AND SERVICES 29
5 USE OF THE MODEM 31
5.1 STARTING WITH THE MODEM 31
5.1.1 Mounting of the modem 31
5.1.2 Installation of the modem 31
5.1.3 Checking the communication with the modem 32
5.1.3.1 Without application 32
5.1.3.2 Standard library 33
5.1.3.3 The application ERCO & GENER EaseLoc_Vx 34
5.1.3.4 The owner application 34
5.1.4 SIM card extraction 34
5.1.5 Hardware reset of the modem 34
5.2 SPECIFIC RECOMMENDATIONS FOR USE OF THE MODEM IN VEHICLES 35

Descriptions and non-contractual illustrations in this document are given as an indication only.
ERCO & GENER reserves the right to make any modification.

5.2.1 Recommended connection on the battery of a truck ... 35
5.2.2 Technical constraints in trucks ... 36
5.3 LEDS OF THE MODEM ... 37
5.3.1 GSM led of the modem ... 37
5.3.1.1 Without application ... 37
5.3.1.2 With standard library ... 37
5.3.1.3 The application ERCO & GENER EaseLoc_Vx ... 37
5.3.1.4 Owner application ... 37
5.3.2 GPS led of the modem ... 37
5.3.3 Led 3 ... 38
5.3.4 Led 4 ... 38
5.3.5 Led 5 ... 38
5.3.6 Led 6 ... 38
5.4 ECHO FUNCTION OF AT COMMANDS DEACTIVATED ... 38
5.5 CHECKING THE QUALITY OF THE GSM RECEPTION SIGNAL ... 39
5.6 VERIFICATION OF THE PIN CODE ... 40
5.7 VERIFICATION OF THE MODEM REGISTRATION ON THE GSM NETWORK ... 40
5.8 READING A CURRENT POSITION GIVEN BY THE GPS ... 41
5.9 MAIN AT COMMANDS (HAYES) ... 42
5.10 TURNING OFF THE MODEM ... 43
5.1 MODEM UPDATING PROCEDURE ... 44
6 TROUBLE SHOOTING ... 44
6.1 PROBLEM OF COMMUNICATION BETWEEN THE MODEM AND THE RS232 LINK (V24) ... 44
6.2 "ERROR" MESSAGE ... 45
6.3 "NO CARRIER" MESSAGE ... 45
7 FUNCTIONAL DESCRIPTION ... 47
7.1 ARCHITECTURE ... 47
7.2 POWER SUPPLY ... 48
7.2.1 General presentation ... 48
7.2.2 Internal battery ... 48
7.2.2.1 Presentation of the internal battery ... 48
7.2.2.2 Specifications of internal battery ... 49
7.2.2.3 Charge and power supply voltage ... 49
7.2.2.4 Indication of presence/absence of external power supply ... 49
7.2.2.5 Instructions and restrictions of use ... 50
7.2.3 Protections of the power supply ... 50
7.3 RS232 SERIAL LINK ... 50
7.3.1 Serial link RS232_0 ... 51
7.3.2 Serial link RS232_1 ... 51
7.3.3 Serial link K_Line (ISO 91141-2) ... 52
7.3.4 Serial link RS232_2 / Bus CAN ... 53

Descriptions and non-contractual illustrations in this document are given as an indication only.
ERCO & GENER reserves the right to make any modification.

7.3.4.1 RS232_2 ... 53
7.3.4.2 CAN Bus ... 53
7.4 INPUTS/OUTPUTS FUNCTIONING ... 55
7.4.1 Management of logical outputs ... 55
7.4.2 Management of logical Inputs ... 56
7.4.3 Management of analog Inputs ... 56
7.5 OPTION 2ND SIM CARD READER ... 57
7.6 BOOT ... 57
7.7 RESET ... 57
7.7.1 General presentation ... 57
7.7.2 RESET sequence ... 58
7.8 WATCHDOG ... 58
7.9 AUDIO ... 59
7.9.1 Microphone inputs ... 59
7.9.2 Loudspeaker outputs (Speaker) ... 59
7.9.3 Buzzer outputs ... 60
7.10 GPS MODULE ... 60
7.11 ACCELEROMETER ... 60
7.12 INTERNAL PROCESSOR ... 61
7.12.1 EGM presentation ... 61
7.12.2 EGM architecture ... 61
8 TECHNICAL CHARACTERISTICS ... 62
8.1 MECHANICAL CHARACTERISTICS ... 62
8.2 ELECTRICAL CHARACTERISTICS ... 63
8.2.1 Power supply ... 63
8.2.2 Consumption ... 64
8.2.2.1 Motherboard @ 25 °C ... 64
8.2.2.2 Consumption of battery charge @ 25 °C ... 64
8.2.2.3 Consumption of GSM module @ 25 °C ... 64
8.2.2.4 Consumption of GPS module @ 25 °C ... 65
8.2.2.5 Consumption of a GPS active antenna @ 25 °C ... 65
8.2.2.6 Consumption of motherboard on battery @ 25 °C ... 65
8.2.2.7 Consumption of GSM module on battery @ 25 °C ... 65
8.2.2.8 Consumption of GPS module on battery @ 25 °C ... 66
8.2.2.9 Consumption of a GPS active antenna on battery @ 25 °C ... 66
8.2.2.10 Max consumption ... 66
8.2.3 Audio interface ... 67
8.2.3.1 Microphone ... 67
8.2.3.2 Loudspeaker ... 68
8.2.3.3 Buzzer ... 69
8.2.4 Inputs/Output ... 70
8.2.4.1 Opto-coupled inputs ... 70

8.2.4.2 Opto-coupled inputs insulated ... 71
8.2.4.3 Outputs ... 72
8.2.4.4 Analog inputs ... 73
8.2.5 SIM interface ... 73
8.2.6 Option 2nd SIM interface ... 73
8.2.7 RESET signal ... 74
8.2.8 One Wire Bus ... 75
8.2.9 K_Line compatible input (ISO 91141-2) ... 76
8.2.10 Characteristics of the RS232 serial links ... 77
8.2.11 RF GSM/DCS characteristics ... 77
8.2.11.1 GSM external antenna ... 78
8.2.12 GPS characteristics ... 78
8.2.12.1 GPS functioning ... 78
8.2.12.2 GPS external antenna ... 79
8.2.12.3 Installation of the GPS external antenna ... 79
8.2.13 Characteristics of the accelerometer ... 80
8.2.14 Power supply 3.8 V ... 80
8.2.15 Power supply Power_Out ... 80
8.2.16 Option power supply 100V ... 82
8.3 ENVIRONMENTAL CHARACTERISTICS ... 82
8.4 STANDARDS/CONFORMITIES ... 82
9 SECURITY RECOMMENDATIONS ... 83
9.1 GENERAL SECURITY ... 83
9.2 SECURITY IN A VEHICLE ... 84
9.3 CARE AND MAINTENANCE ... 84
9.4 YOUR RESPONSIBILITY ... 84
10 RECOMMENDED ACCESSORIES ... 85
11 CLIENT SUPPORT ... 85
DECLARATION OF CONFORMITY ... 86

Descriptions and non-contractual illustrations in this document are given as an indication only.
ERCO & GENER reserves the right to make any modification.

Index of Tables

Table 1 : 4-pin Micro-FIT connector 20
Table 2 : 14-pin µFit connector 21
Table 3 : 16-pin Micro-FIT connector 22
Table 4 : Connector RJ9 audio 23
Table 5 : Characteristics of power supply cable 24
Table 6 : Characteristics of 14-wire Inputs/Outputs cable 25
Table 7 : 14-wire Inputs/Outputs cable 25
Table 8 : Characteristic 14-wire serial link cable 26
Table 9 : Wiring of 14-wire serial links cable 27
Table 10 : Characteristic 16-wire serial link cable (Boot + Reset) 28
Table 11 : Wiring of 16-wire serial link cable (Boot + Reset) 28
Table 12 : Characteristics and services 29
Table 13 : Status of GSM LED 37
Table 14 : Status of GPS LED 37
Table 15 : Value RSSI 39
Table 16 : Verification of the PIN code 40
Table 17 : Verification of modem registration on GSM network 40
Table 18 : Reading a current position given by the GPS 42
Table 19 : Main AT commands used with the modem 42
Table 20 : Solutions when there is no dialogue between the modem and the RS232 link 44
Table 21 : Solutions when a message "NO CARRIER" is returned 46
Table 22 : Characteristics of the polymer lithium battery 49
Table 23 : Examples of responses with the internal battery option cabled 49
Table 24 : Description of pins of serial link RS232_0 51
Table 25 : Description of pins of serial link RS232_1 52
Table 26 : Description of pin K_Line 52
Table 27 : Description of pins of serial link RS232_2 53
Table 28 : Description of pins of serial link CAN 54
Table 29 : Example of management of logical Outputs 55
Table 30 : Example of management of logical Inputs 56
Table 31 : Example of management of analog Inputs 56
Table 32 : Description of the RESET signal pin 57
Table 33 : Description of connector RJ9 59
Table 34 : Description of micro Input of RJ9 connector 59
Table 35 : Description of loudspeaker output of RJ9 connector 59
Table 36 : Description of buzzer Output 60
Table 37 : Mechanical characteristics 62
Table 38 : Electrical characteristics 63
Table 39 : Effects of power supply defect 63

Descriptions and non-contractual illustrations in this document are given as an indication only.
ERCO & GENER reserves the right to make any modification.

Table 40 : Motherboard consumption @ 25 °C 64
Table 41 : Consumption of battery charge @ 25 °C 64
Table 42 : Consumption of GSM module @ 25 °C 64
Table 43 : Consumption of GPS module @ 25 °C 65
Table 44 : Consumption of a GPS active antenna GPS @ 25 °C 65
Table 45 : Consumption of motherboard on battery @ 25 °C 65
Table 46 : Consumption of GSM module on battery @ 25 °C 65
Table 47 : Consumption of GPS module on battery @ 25 °C 66
Table 48 : Consumption of a GPS active antenna on battery @ 25 °C 66
Table 49 : Polarization characteristics for a dynamic microphone 67
Table 50 : Characteristics recommended for the dynamic microphone 67
Table 51 : Characteristics of Output for loudspeaker 68
Table 52 : Characteristics of buzzer output 69
Table 53 : Example of transducer tested with the GenLoc 54e 69
Table 54 : Characteristics of opto-coupled inputs 70
Table 55 : Pin out of insulated inputs 71
Table 56 : Characteristics of open-collector output 72
Table 57 : Characteristics of analog inputs 73
Table 58 : Characteristics of SIM card supply voltage 73
Table 59 : Conditions of use of RESET signal 74
Table 60 : One Wire Bus – Electrical characteristics of the ARM 75
Table 61 : K_Line bus 76
Table 62 : Characteristics of the UART 77
Table 63 : Parameters of the RF receiver and transmitter 77
Table 64 : Characteristics of the GSM external antenna 78
Table 65 : GPS parameters 78
Table 66 : Characteristics of the GPS external antenna 79
Table 67 : Characteristics of the accelerometer 80
Table 68 : Conditions of use of the output power supply 3.8 V 80
Table 69 : Environmental characteristics 82

Descriptions and non-contractual illustrations in this document are given as an indication only.
ERCO & GENER reserves the right to make any modification.

Index of Figures

Figure 1 : Content ... 16
Figure 2 : Example of label placed on the packaging ... 17
Figure 3 : Front side ... 18
Figure 4 : Back side ... 18
Figure 5 : Back side ... 19
Figure 6 : 4-pin Micro-FIT connector ... 20
Figure 7 : 14-pin Micro-FIT connector ... 21
Figure 8 : 16-pin Micro-FIT connector ... 22
Figure 9 : Connector RJ9 audio ... 23
Figure 10 : 4-pin power supply cable ... 23
Figure 11 : Fuse Mini Blade ... 24
Figure 12 : 14-wire Inputs/Outputs cable ... 25
Figure 13 : 14-wire serial link cable ... 26
Figure 14 : 16-wire serial link (Boot + Reset) ... 28
Figure 15 : Mounting of the modem ... 31
Figure 16 : Installation of the modem ... 31
Figure 17 : Recommended connection on the battery of a truck ... 35
Figure 18 : Forbidden electrical connection (risk of damage on the modem) ... 36
Figure 19 : Functional architecture ... 47
Figure 20 : Normalized signals of the serial link RS232_0 ... 51
Figure 21 : Normalized signals of serial link RS232_1 ... 52
Figure 22 : K_Line signal ... 52
Figure 23 : Normalized signals of serial link RS232_2 ... 53
Figure 24 : Normalized signals of serial link CAN ... 54
Figure 25 : Chronogram of RESET signal ... 58
Figure 26 : positioning of the accelerometer axis ... 60
Figure 27 : Software architecture ... 61
Figure 28 : Dimensions ... 62
Figure 29 : Max consumption ... 66
Figure 30 : Micro interface ... 68
Figure 31 : Loudspeaker interface ... 68
Figure 32 : Example of transducer tested with the GenLoc 54e ... 69
Figure 33 : Internal electric scheme of the inputs ... 70
Figure 34 : Internal electrical scheme of insulated inputs ... 71
Figure 35 : Internal electric scheme of the output ... 72
Figure 36 : Example of relay control ... 72
Figure 37 : Internal electrical scheme of analog input ... 73
Figure 38 : Wiring scheme of RESET signal ... 74
Figure 39 : Internal electrical scheme of the One Wire bus ... 75

Descriptions and non-contractual illustrations in this document are given as an indication only.
ERCO & GENER reserves the right to make any modification.

Figure 40 : Scheme of connection of the K_Line input on a Chrono- tachograph 76
Figure 41 : Internal electrical scheme of the K_Line bus 76
Figure 42 : Level of K_Line bus 76
Figure 43 : Recommended installation of GPS antenna 79
Figure 44 : Installation of GPS antenna not recommended 79
Figure 45 : Internal electrical scheme of the Power_Out 81
Figure 46 : Drop of voltage 81

Descriptions and non-contractual illustrations in this document are given as an indication only.
ERCO & GENER reserves the right to make any modification.

Presentation

Entirely dedicated to geo-localization and embedded data services, the modem GenLoc 54e combines the GSM / GPRS and GPS functions in the same robust casing.
The GPS data can be transmitted by SMS or data GSM/GPRS communication.
This product includes the GPS function 50 channels. The GPS high sensitivity solution ensures the data collection in difficult environments.
The modem is Quad-Bands (850/900/1800/1900 MHz) GSM/GPRS Class 10.
The GenLoc 54e provides 3 operating modes:

- External mode (standard): The control is done by an external application. The modem is used with the AT command set (see Commands List EG_EaseLoc_Vx_CL_yyy_UK of ERCO & GENER).
- Autonomous mode (optional): Once configured, the modem is autonomous, it cyclically registers the positions and tranmits them automatically to the client's application via different services: SMS, GSM Data, TCP socket GPRS (see EG_EaseLoc_Vx_CL_yyy_UK of ERCO & GENER).
- Specific development mode: the EGM development tool allows a development of additional and customized applications. For more information about the tools and the training, please contact our sales department.

By default, the GenLoc 54e provides:
2 RS232 ports,
a 1-Wire interface
a K_Line interface (ISO 9141-2)
Digital inputs/outputs, 5 inputs, 3 outputs
1 One Wire input
2 analog inputs
a backup battery
a 3-axis accelerometer

The GenLoc 54e can be equipped with the options One Wire multi slave, Bus CAN and DUAL SIM.

Its protocols of IP connectivity integrated in the embedded application EaseLoc_Vx, are also available under EGM libraries for a specific development, allowing a quick installation of embedded telematics solutions with high added-value.

This document describes the modem and provides the following information:

- General presentation,
- Functional description,
- Available basic services,
- Installation and use of the modem (first level),
- Trouble shooting,
- Recommended accessories for the use of the modem.

For more information about this document, ERCO & GENER puts at your disposal the following elements:

- Commands List
  - External Mode EG_EGM_CL_xxx_yy
  - Autonomous Mode EG_EaseLoc_Vx_CL_yyy_UK
- Application Note EG_GenLoc54e_1040_AN_xxx_yy
- Release Note EG_GenLoc54e_1040_RL_xxx_yy
- Client support (Hot-Line)

Descriptions and non-contractual illustrations in this document are given as an indication only.
ERCO & GENER reserves the right to make any modification.

Warning

- ERCO & GENER advises to read carefully all documents linked to the product GenLoc 54e (User Guide, Application Notes, Command List).
- ERCO & GENER cannot be held responsible for:
  - The problems due to an inappropriate use of the GenLoc 54e.
  - The problems due to a wrong configuration
  - The problems due to a wrong use of an embedded software application developed or supplied by a third party.
  - The dysfunctions due to the absence or a bad coverage of the GSM, GPRS and GPS networks.
  - The dysfunctions if the product is used for the watching of physical persons where human life is engaged.
- ERCO & GENER reserves the right to modify the functions of its products "GenLoc 54e" and "EaseLoc" without previous notice.

- To avoid any risk of electrocution, do not open the casing.
- For any functioning, the casing must be closed.
- No internal part can be repaired by the user. The **GenLoc 54e** must be returned to the factory for any repair.
- The **GenLoc 54e** must be placed in a normally ventilated area, out of sources of heat.
- In order to guarantee the electromagnetic compatibility, the length of the serial cable, the power supply cable and the inputs/outputs cable must not exceed 3 meters.
- The **GenLoc 54e** must not be connected directly to the mains supply; a voltage adapter must be used.

SCRAP THE WORN BATTERIES ACCORDING TO INSTRUCTIONS.

Descriptions and non-contractual illustrations in this document are given as an indication only.
ERCO & GENER reserves the right to make any modification.

Copyright

The reproduction, transfer, distribution or storage of part or the totality of the contents of this document, in any form, without the prior written authorization of ERCO & GENER is strictly prohibited.

GenLoc 54e is a trademark of ERCO & GENER.
Hayes is a registered trademark of Hayes Microcomputer Product Inc. The names of products and companies mentioned in this document may be names or trademarks of their respective holders.

The use of some products or services described in this document may require a paying subscription. The availability of some products or services described in this document may change, depending on the configurations and the materials.

In some countries, restrictions of use of the devices may be applied. For more information, thank you to contact your nearest legally qualified local government representative.

ERCO & GENER follows a method of continuous development. Consequently, ERCO & GENER reserves the right to change and improve any of its products described in this document, without notice.
The contents of this document are provided “as it is”. Except for the applicable obligatory laws, no guarantee in any form, explicit or implicit, including but without being limited to it the implicit guarantees of aptitude to marketing and of appropriateness to a particular use, is granted concerning the precision, the liability or the contents of this document. ERCO & GENER reserves the right to revise or withdraw this document at any time and without notice.

ERCO & GENER cannot be held responsible for any loss of data or income, as well as particular damage, incidental, consecutive or indirect.

1 References

1.1 Referred documents

Commands List of
Standard library of ERCO & GENER..... : EG_EGM_CL_xxx_yy
Embedded application EaseLoc of ERCO & GENER ..... : EG_EaseLoc_Vx_CL_yyy_UK
Application Notes GenLoc 54e of ERCO & GENER ..... : EG_GenLoc54e_1040_AN_xxx_yy

GSM reference documents:

- GSM 07.05.
- GSM 07.07.

1.2 Abbreviations

Abbreviations definition

AC	Alternative Current
ACM	Accumulated Call Meter
AMR	Adaptive Multi-Rate
AT	Attention (prefix for modem commands)
BTS	Base Transceiver Station
CLK	ClocK
CMOS	Complementary Metal Oxide Semiconductor
CS	Coding Scheme
CTS	Clear To Send
dB	Decibel
dBc	Decibel relative to the Carrier power
dBi	Decibel relative to an Isotropic radiator
dBm	Decibel relative to one milliwatt
DC	Direct Current
DCD	Data Carrier Detect
DCE	Data Communication Equipment
DCS	Digital Cellular System
DSR	Data Set Ready
DTE	Data Terminal Equipment
DTMF	Dual Tone Multi-Frequency
DTR	Data Terminal Ready
EEPROM	Electrically Erasable Programmable Read-Only Memory
EFR	Enhanced Full Rate
EGM	Erco Gener Middleware
E-GSM	Extended GSM
EMC	ElectroMagnetic Compatibility
EMI	ElectroMagnetic Interference
ESD	ElectroStatic Discharges
ETSI	European Telecommunications Standards Institute
FIT	Series of connectors (micro-FIT)
FR	Full Rate
FTA	Full Type Approval
FTP	File Transfert Protocol
GCF	Global Certification Forum
GND	GrouND
GPIO	General Purpose Input Output
GPRS	General Packet Radio Service
GPS	Global Positioning System
GSM	Global System for Mobile communications

Descriptions and non-contractual illustrations in this document are given as an indication only.
ERCO & GENER reserves the right to make any modification.

HR	Half Rate
I	Input
IEC	International Electrotechnical Commission
IMEI	International Mobile Equipment Identification
I/O	Input / Output
LED	Light Emitting Diode
LLC	Low Level Command
MAX	MAXimum
ME	Mobile Equipment
MIC	MICrophone
Micro FIT	Family of connectors from Molex
MIN	MINimum
MNP	Microcom Networking Protocol
MO	Mobile Originated
MS	Mobile Station
MT	Mobile Terminated
NOM	NOMinal
O	Output
Pa	Pascal (for speaker sound pressure measurements)
PBCCH	Packet Broadcast Control Channel
PC	Personal Computer
PCL	Power Control Level
PDP	Packet Data Protocol
PIN	Personal Identity Number
PLMN	Public Land Mobile Network
PUK	Personal Unblocking Key
RF	Radio Frequency
RFI	Radio Frequency Interference
RI	Ring Indicator
RMS	Root Mean Square
RTS	Request To Send
RX	Receive
SIM	Subscriber Identification Module
SMA	SubMiniature version A RF connector
SMB	SubMiniature version B RF connector
SMS	Short Message Service
SNR	Signal-to-Noise Ratio
SNTP	Simple Network Time Protocol
SPI	Serial Peripheral Interface
SPL	Sound Pressure Level
SPK	SpeaKer
SRAM	Static RAM
TCP/IP	Transmission Control Protocol / Internet Protocol
TDMA	Time Division Multiple Access
TU	Typical Urban fading profile
TUHigh	Typical Urban, High speed fading profile
TX	Transmit
TYP	TYPical
UTC	Universal Time Clock
VSWR	Voltage Stationary Wave Ratio

Descriptions and non-contractual illustrations in this document are given as an indication only.
ERCO & GENER reserves the right to make any modification.

1.3 Symbols

The following symbols are used to highlight the important information of this userguide.

A symbol for the essential information linked to the module integration and performance.

A warning symbol indicates the actions that could harm or damage the module

2 Packaging

2.1 Content

The GenLoc 54e is supplied with:

- a GenLoc 54e cardboard packaging,
- a modem GenLoc 54e,
- 2 fixing brackets,
- a 4-wire power supply cable, input/output (Red/Black/Yellow/Brown) stripped with fuse.
- a 14-wire stripped cable equipped with a 14-pin connector, Inputs/Outputs.
- a 14-wire cable equipped with a 16-pin connector, with a Sub- D 9 pins and stripped wires.
- a technical sheet (Instructions Sheet).

Figure 1 : Content

2.2 Modem packaging

The external dimensions of the modem packaging are:

- Width : 160 mm,
- Height : 280 mm,
- Length : 64 mm.

A packaging label is placed on the side of the box. It shows:

- The logo ERCO & GENER,
- The product reference: GenLoc 54e,
- The CE mark,
- The IMEI bar code with 15 digits.

The dimensions of the label are:

- Height : 37 mm,
- Length : 70 mm.

Figure 2 : Example of label placed on the packaging

2.3 Modem label

On the standard casing, there are 2 labels placed on the back side of the modem:

▪ A production label indicating the following information: (see picture of paragraph Fixing brackets)

- The CE mark,
- The crossed wheelie-bin mark (DEEE standards),
- The direct current mark (V_{DC}),
- The IMEI bar code with 15 digits.

If the internal battery option has been mounted during production, the modem has the following label: Lithium-Polymer Battery Inside.

3 General presentation

3.1 Description

Description of the modem GenLoc 54e:

3.1.1 Front side

Figure 3 : Front side

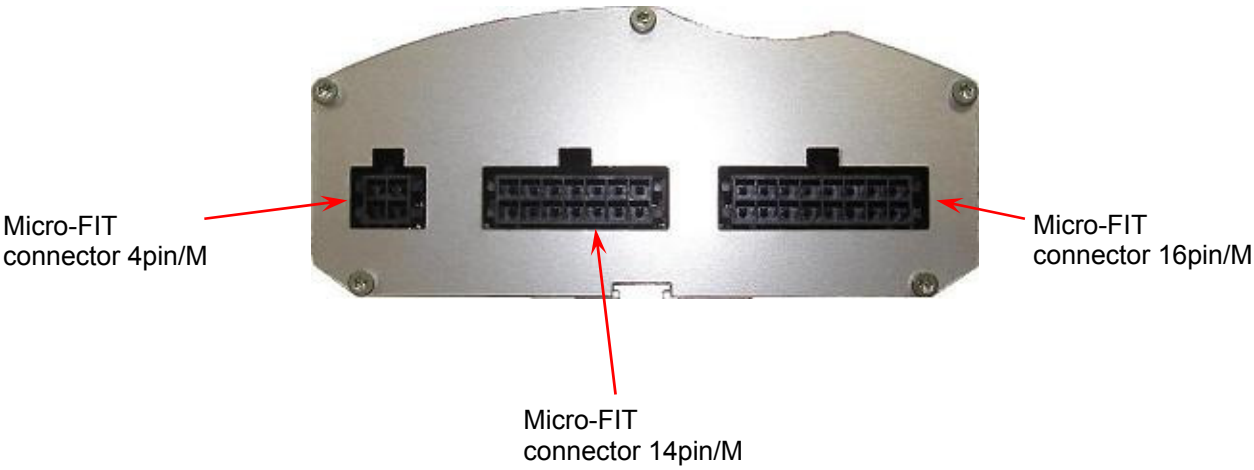

3.1.2 Back side

Figure 4 : Back side

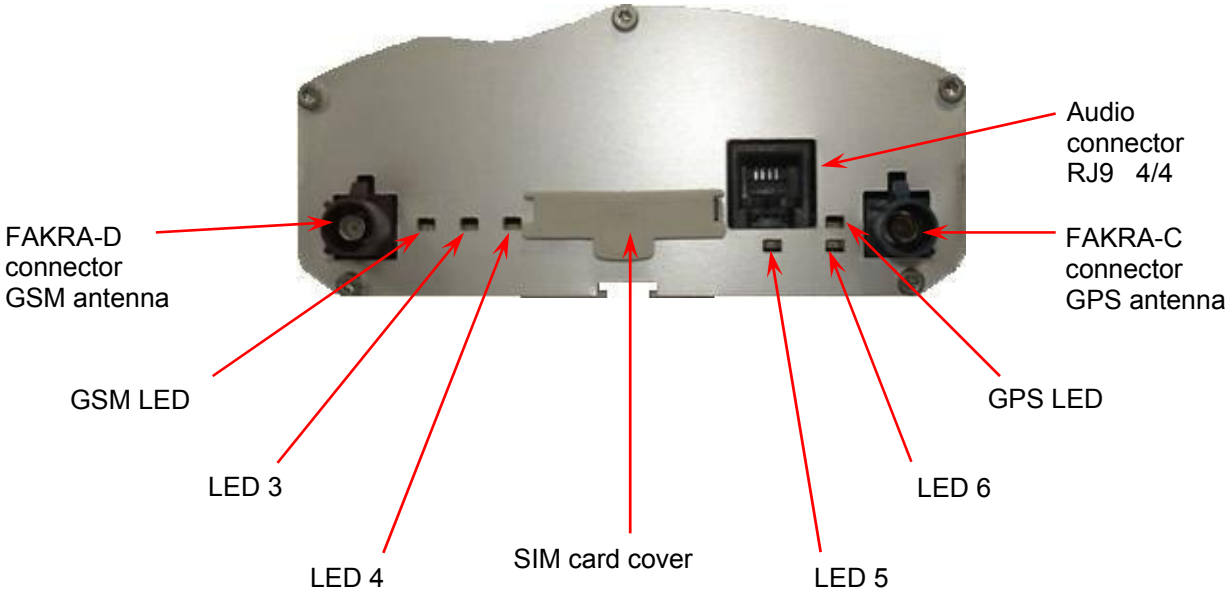

Descriptions and non-contractual illustrations in this document are given as an indication only.
ERCO & GENER reserves the right to make any modification.

3.1.3 Fixing brackets

2 brackets to fix the modem on a support.

Figure 5 : Back side

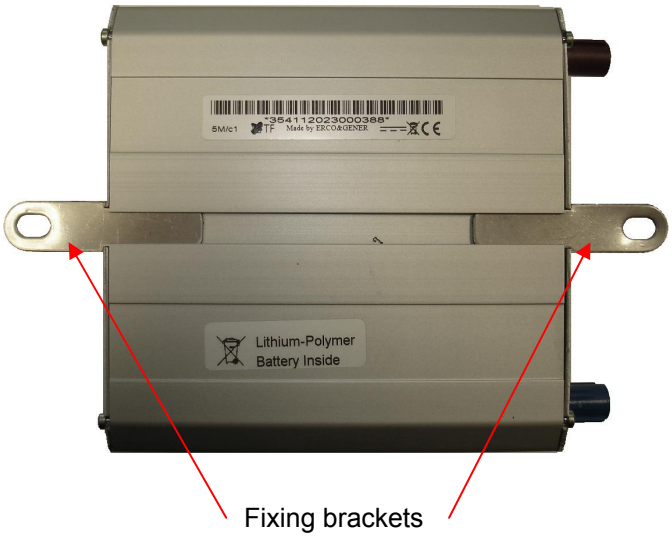

3.2 External connections

3.2.1 Connections

3.2.1.1 Antenna connectors

GSM antenna connector:

The GSM antenna connector is FAKRA D male with a 50Ω impedance.

GPS antenna connector:

The GPS antenna connector is FAKRA C male with a 50Ω impedance.

3.2.1.2 Micro FIT connectors

Female Micro-FIT connector with 4 male pins:

This connector of the GenLoc 54e is a connector for the DC external supply and the GPIOs (2 signals Input and Output).

Figure 6 : 4-pin Micro-FIT connector

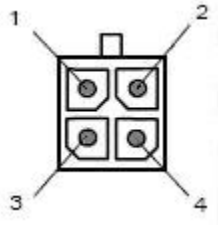

Table 1 : 4-pin Micro-FIT connector

Pin N°	Signal
1	$+V_{DC}$
2	GND
3	Logical INPUT 1 (E1)
4	Logical OUTPUT 1 (S1)

The pins 3 and 4 are used for Input/Output functions. The modem can only be powered by the pins 1 ($+V_{DC}$) and 2 (GND).
You must use the power supply cable provided with the modem. It ensures the protection of the equipment.

Descriptions and non-contractual illustrations in this document are given as an indication only.
ERCO & GENER reserves the right to make any modification.

Female Micro-FIT connector with 14 male pins:

This connector of the GenLoc 54e is a connector for the inputs, logical and analog outputs.

Figure 7 : 14-pin Micro-FIT connector

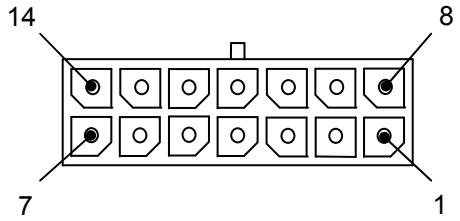

Table 2 : 14-pin µFit connector

Pin N°	type	Nature	Signal	Option*
1	I/O	Logical	ONE_WIRE	Multi slaves managed by DS 2482S-100 (Maxim)
2	Input	Analog	ANA2	
3	Input	Logical	E5-	
4			E5+	
5	Input	Logical	E4	
6	Output	Logical	S3	
7	Output	Analog	+ 3.8 V	
8	---	---	GND	GND
9	Input	Analog	ANA1	
10	Input	Logical	E3-	
11			E3+	
12	Input	Logical	E2	
13	Output	Logical	S2	
14	Output	Logical PWM	BUZZER	BUZZER

* Contact us

Descriptions and non-contractual illustrations in this document are given as an indication only.
ERCO & GENER reserves the right to make any modification.

Female Micro-FIT connector with 16 male pins:

This connector of the GenLoc 54e is a connector for the serial links 0, 1, 2 or bus CAN (option) and control signal BOOT, RESET.

Figure 8 : 16-pin Micro-FIT connector

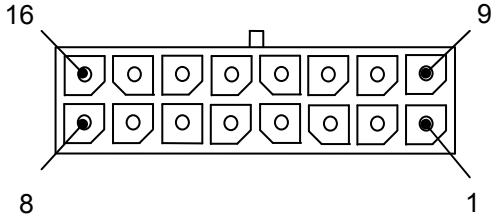

Table 3 : 16-pin Micro-FIT connector

Pin N°	type	Nature	Signal	Option 1*	Option 2*	Option 3*
1	---	---	GND			
2	Input	Logical	Not connected	TX_2	CANH	K_Line compatible
3	Output	Logical	Not connected	RX_2	CANL	
4	---	---	GND			
5	Output	Logical	CTS_1		CANH	
6	Input	Logical	K_Line compatible (ISO 9141-2)	RTS_1	CANL	
7	Input	Logical	TX_1			
8	Output	Logical	RX_1			
9	Output	Analog	POWER_OUT			
10	Input	Logical	RESET			
11	Input	Logical	BOOT			
12	---	---	GND			
13	Output	Logical	CTS_0			
14	Input	Logical	RTS_0			
15	Input	Logical	TX_0			
16	Output	Logical	RX_0			

* Contact us

Descriptions and non-contractual illustrations in this document are given as an indication only.
ERCO & GENER reserves the right to make any modification.

3.2.1.3 Audio connector

Connector RJ 9 4/4:

This connector of the GenLoc 54e is a connector for a telephone handset.

Figure 9 : Connector RJ9 audio

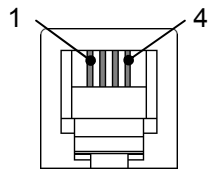

Table 4 : Connector RJ9 audio

Pin N°	Signal
1	Microphone -
2	Loudspeaker -
3	Loudspeaker +
4	Microphone +

3.2.2 Cables

3.2.2.1 4-pin Micro-FIT cable

(ERCO & GENER reference: 4402304215)

Figure 10 : 4-pin power supply cable

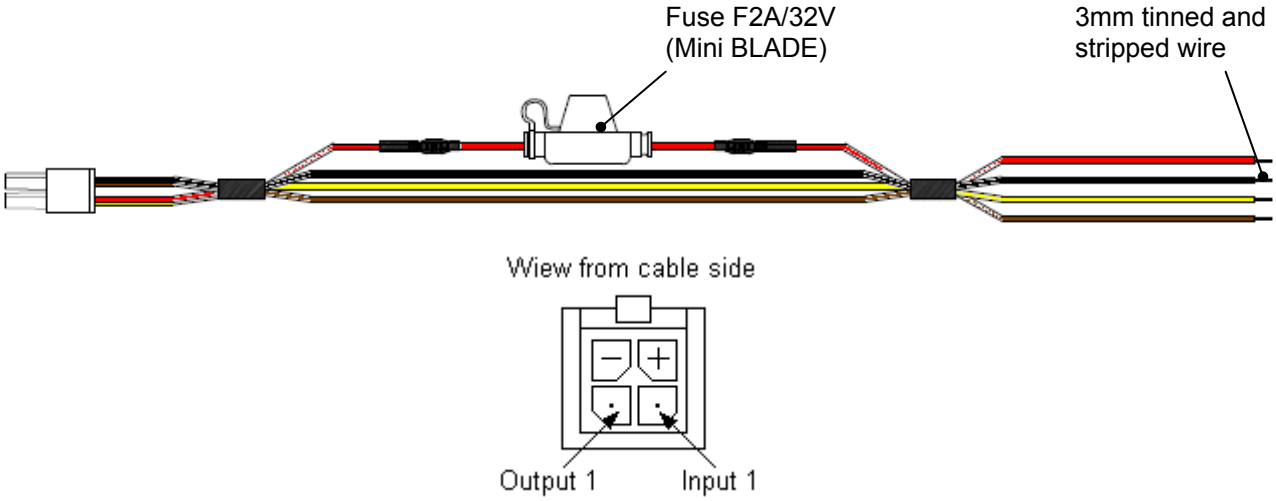

Table 5 : Characteristics of power supply cable

Component	Characteristics
4-pin connector	
Cable	Length ≈ 1.5m
Wire	Section : 0.75 mm²
Fuse	FK2A - 32V

Signal	Color
$+V_{DC}$	Red
GND	Black
INPUT 1 (E1)	Yellow
OUTPUT 1 (S1)	Brown

Fuse reference: Mini Blade for automobile 2A - 32V (color code: grey)

Figure 11 : Fuse Mini Blade

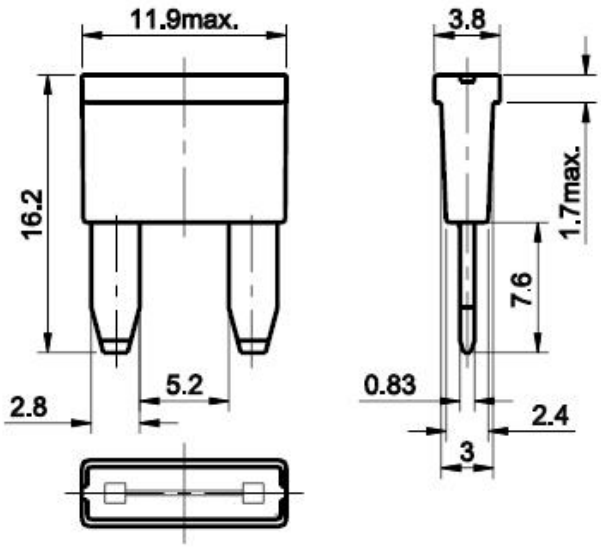

3.2.2.2 14-pin Micro-FIT cable (Inputs/Outputs)

(ERCO & GENER reference: 4402314215)

Figure 12 : 14-wire Inputs/Outputs cable

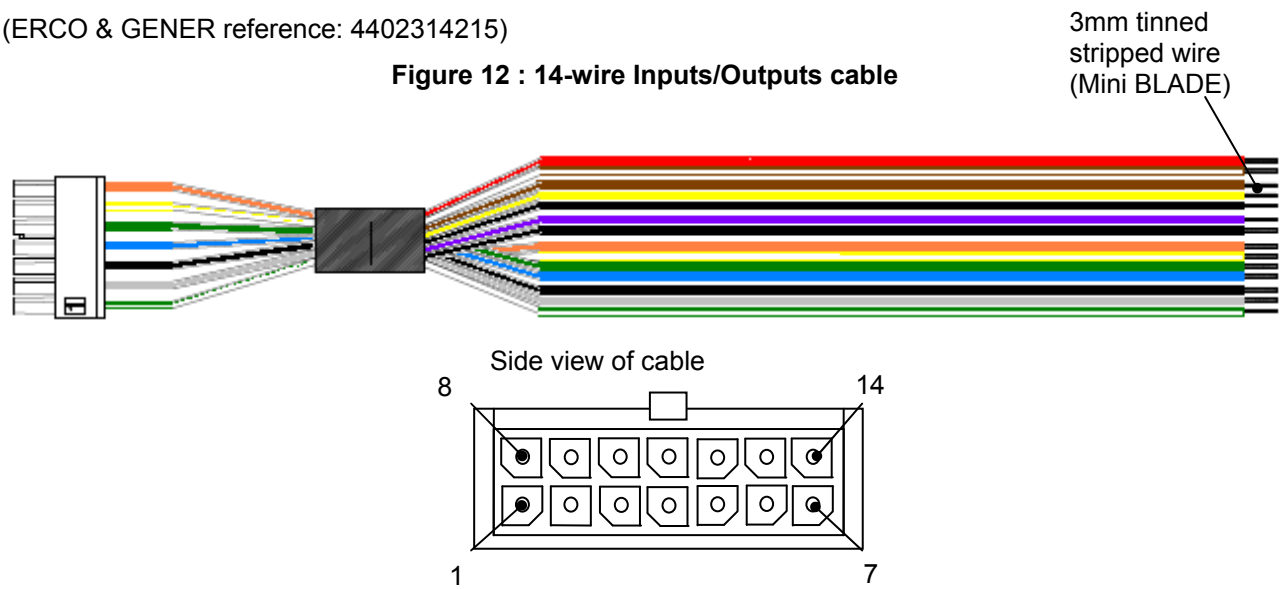

Table 6 : Characteristics of 14-wire Inputs/Outputs cable

Component	Characteristics
16-pin connector	
Cable	Length ≈ 1.5m
Wire	Section : 0.5 mm²

Table 7 : 14-wire Inputs/Outputs cable

Pin N°	Signal	Color
1	ONE_WIRE	White/Green
2	ANA2	Grey
3	E5-	Black
4	E5+	Blue
5	E4	Green
6	S3	White /Yellow
7	+ 3.8 V	Orange
8	GND	Black
9	ANA1	Violet
10	E3-	Black
11	E3+	Yellow
12	E2	Brown
13	S2	White / Brown
14	BUZZER	Red

Descriptions and non-contractual illustrations in this document are given as an indication only.
ERCO & GENER reserves the right to make any modification.

3.2.2.3 14-wire Micro-FIT cable (Serial links)

(ERCO & GENER reference: 4404314215)

Figure 13 : 14-wire serial link cable

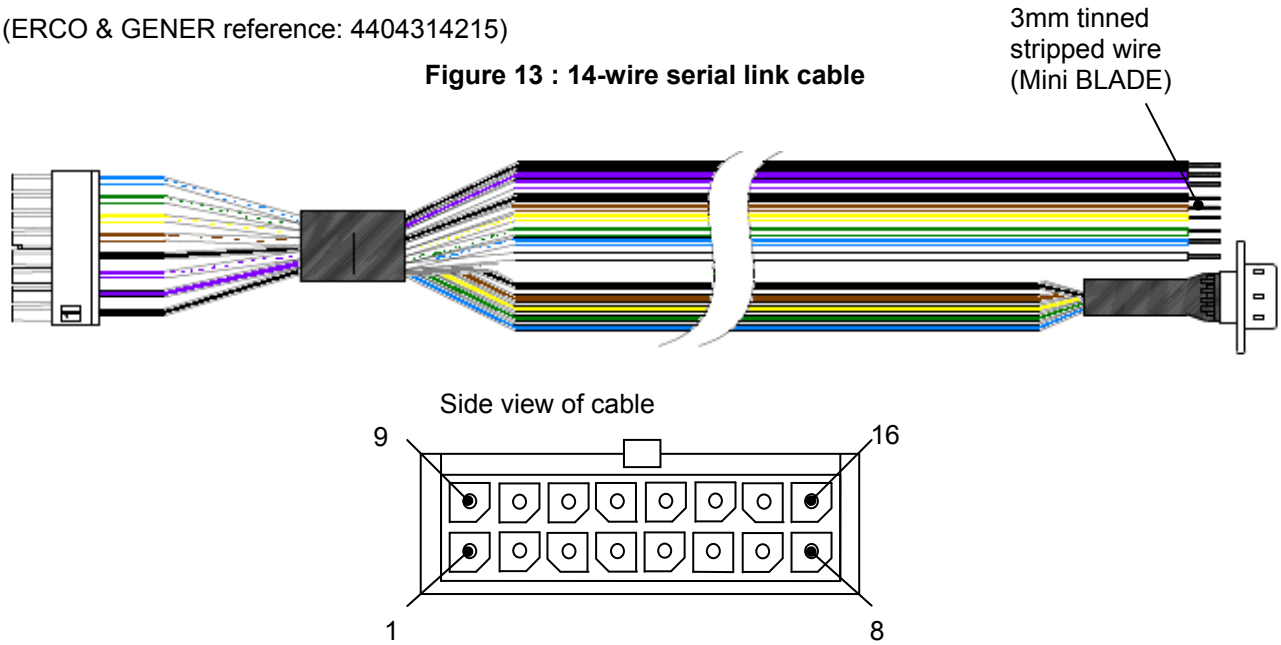

Table 8 : Characteristic 14-wire serial link cable

Component	Characteristics
16-pin connector	
Cable	Length ≈ 1.5m
Wire	Section : 0.5 mm²
Sub D 9 pin Female	

Descriptions and non-contractual illustrations in this document are given as an indication only.
ERCO & GENER reserves the right to make any modification.

Table 9 : Wiring of 14-wire serial links cable

Pin N°	Signal	Color	Sub D 9 pin
1	GND	Black	---
2	TX_2 / CANH / K_Line compatible	Violet	---
3	RX_2 / CANL	White/Violet	---
4	GND	Black	---
5	CTS_1 / CANH	White /Brown	---
6	K_Line compatible/ RTS_1 / CANL	White /Yellow	---
7	TX_1	White /Green	---
8	RX_1	White /Blue	---
9	POWER_OUT	White	---
10	RESET	---	---
11	BOOT	---	---
12	GND	Black	5
13	CTS_0	Brown	8
14	RTS_0	Yellow	7
15	TX_0	Green	3
16	RX_0	Blue	2
	---	---	9
	---	---	6
	---	---	4
	---	---	1

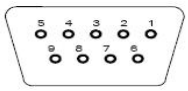

3.2.2.4 16-pin Micro-FIT cable (Serial links, Boot and Reset)

As an option, a 16-wire cable can be provided. It is the same as the previous one but provides also the "Boot" and "Reset" inputs. These cables have a 30 cm length.

This cable is already included with the EGM development kits.

(ERCO & GENER reference: 4402316215)

Figure 14 : 16-wire serial link (Boot + Reset)

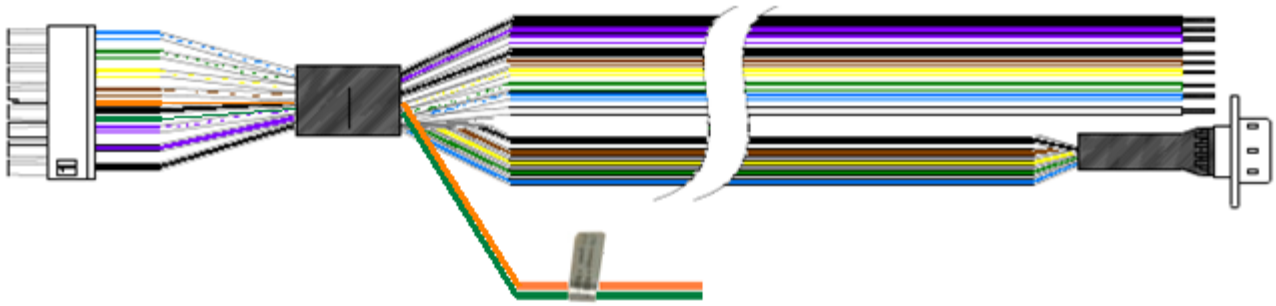

Table 10 : Characteristic 16-wire serial link cable (Boot + Reset)

Component	Characteristics
16-pin connector	
Cable	Length ≈ 0.3m
Wire	Section : 0.5 mm²

Table 11 : Wiring of 16-wire serial link cable (Boot + Reset)

Pin N°	Signal	Color	Sub D 9 pin
10	RESET	Orange	---
11	BOOT	Green	---

Descriptions and non-contractual illustrations in this document are given as an indication only.
ERCO & GENER reserves the right to make any modification.

4 Characteristics and Services

The GenLoc 54e is:

- A GSM/GPRS modem class10 dedicated to asynchronous binary data transmission, SMS and voice.
- A GPS module dedicated to position tracking.

The modem characteristics and the available services are summarized in the table below.

Table 12 : Characteristics and services

GSM functions
- Quad-Bands GSM 850/EGSM 900/DCS 1800/PCS 1900 MHz
- ETSI GSM Phase 2+ Class 4 (2W @ 850 / 900 MHz - 33 dBm) Class 1 (1W @ 1800 / 1900 MHz - 30 dBm)
- SIM Toolkit
VOICE functions
- Voice (GSM mode)
- Telephony, Emergency call 112
- Full Rate, Enhanced Full Rate, Half Rate and AMR (FR/EFR/HF/AMR)
- Echo cancelation and noise reduction
- Full Duplex Free-hands
DATA functions
- GPRS Class 10 (Up to 4Rx / 2Tx)
- PBCCH/PCCCH supported, Coding schemes : CS1 to CS4
- TCP/IP library (UDP Socket*, TCP*)
- CSD 9600 kbs (Max.)
- SMS Text, PDU, point to point MT/MO and SMS Cell Broadcast
GPS functions
- Civil frequency L1 (1575,42MHz)
- 50 channel receiver
- Precision : 2.5m CEP (DGPS 2m CEP)
- Sensitivity: -161dB
- Protocols : NMEA-0183, UBX Binary
- A-GPS compatible
Interfaces
- GSM antenna: connector FAKRA-D
- GPS antenna: connector FAKRA-C
- Power supply 3.3V for GPS antenna active
- Power supply: +7.2 to +32 V_{DC} (micro-FIT connector)
- 1 serial port RS232_0 (300 to 115200bds) Sub-D 9 pin Female
- 1 serial port RS232_1 (300 to 115200bds)
- 1 serial link K_Line compatible
- AT commands: GSM 07.05 and 07.07
- Specific AT commands for GPS
- SIM reader (SIM 3V – 1,8V)

Descriptions and non-contractual illustrations in this document are given as an indication only.
ERCO & GENER reserves the right to make any modification.

- 3 opto-coupled inputs
- 2 insulated opto-coupled inputs
- 3 open collector outputs
- 2 analog inputs (0 – 10 Volts)
- External power supply V_{POWER} controllable (Micro-FIT 16-pin connector)
- Battery charge inhiber
- Buzzer output (Micro-FIT 14-pin connector)
- Backup battery
- 1 port ONE_WIRE
- power supply output 3.6 to 4.2 V
- 3-axis accelerometer
- Audio

Accessories supplied

- Fixing brackets (x2)
- 4-wire cables with micro FIT connector(power supply, Input and Output)
- Cables with 14-pin micro FIT connector, 14 wires (Input and Output)
- Cables with 16-pin micro FIT connector, 14 wires (Serial ports)

Options / Additional accessories *

- power supply 100 Volts
- Direct logical GPIO
- Powering controllable by RTC
- CAN Bus (Cango) standards FMS protocol
- CAN Bus low layer : without protocol
- Double SIM card holder
- ONE WIRE Multi slaves
- 1 serial port RS232_2 RS232
- Accessories: Antennas, cables, power supply... (consult our website)

* These options are an addition or a replacement of some existing options, contact us.

Descriptions and non-contractual illustrations in this document are given as an indication only.
ERCO & GENER reserves the right to make any modification.

5 Use of the modem

5.1 Starting with the modem

5.1.1 Mounting of the modem

To mount the modem on a support, use the fixing brackets as described below.

Figure 15 : Mounting of the modem

- Must be fixed on a flat surface
- Max. height of the screw head: 7 mm

The aluminium casing of the modem is connected to the 0V (GND) of the power supply and to the 0V of the RS232 serial link. To avoid any risk of conduction of the ground plane to other equipments, the modem must be electrically insulated from its mechanical support.

5.1.2 Installation of the modem

To install the modem, it is recommended to do the following operations with the modem turned OFF:

- Remove the SIM card cover on the back side.
- Carefully insert the SIM card into the reader.

Figure 16 : Installation of the modem

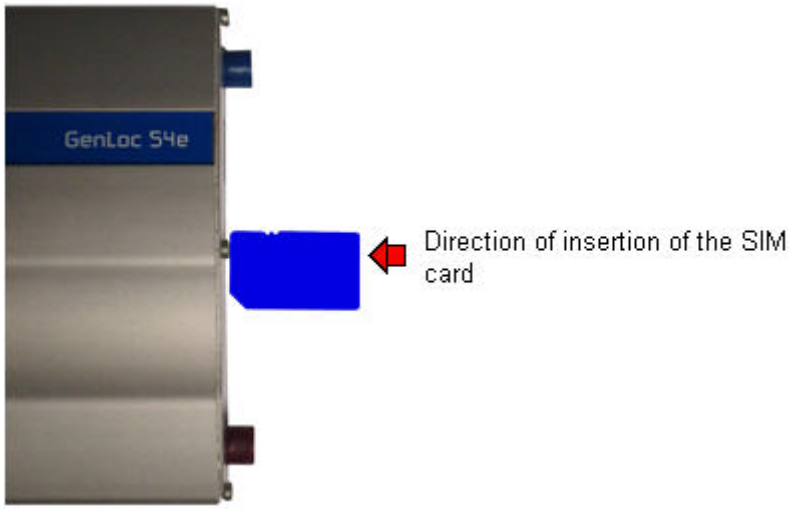

- Push the SIM card until hearing a "clic" that ensures its correct positioning.
- Put the SIM cover back.

Descriptions and non-contractual illustrations in this document are given as an indication only.
ERCO & GENER reserves the right to make any modification.

- Connect the GSM antenna to the FAKRA-D connector.
- Connect the GPS antenna to the FAKRA-C connector.
- For the connection to the DTE, connect the V24 link via the 9-pin Sub D cable.
- Connect the power cable to the continuous and regulated power source (for an automobile application, see paragraph 5.2).
- Connect the power cable to the modem and turn ON the external power supply.

The modem is now ready.

Depending on the application installed in the equipment:

- Without application: corresponds to BootLoader.
- Standard library.
- The application ERCO & GENER EaseLoc_Vx.
- The owner application.

we get different views. See paragraph below.

5.1.3 Checking the communication with the modem

5.1.3.1 Without application

The GenLoc 54e does not contain any application; it will return the menu of the BootLoader.

Connect the RS232 link between the DTE (COM port) and the modem (DCE).

Set the RS232 port of the DTE as follows:

- Bits per second: 115 200 bps,
- Data bits: 8,
- Parity: None,
- Stop bits: 1,
- Flow control: without.

Use a communication software like Windows HyperTerminal ®.

Menu by default when there is no application inside the equipment (example of display)

```
Bootloader V4.09 GL54 UA Gener Ublox (HWF1 rev D/E)
GSM voltage = 4325 mV
 1 - Update application
 2 - Erase objects
 M - GSM direct access (external supply required)
 A - Advanced
 P - Power off
 E - Exit
```

In the case where no communication can be established with the modem:

- Check the RS232 connection between the DTE and the modem (DCE),
- Check the configuration of the COM port of the DTE.

Descriptions and non-contractual illustrations in this document are given as an indication only.
ERCO & GENER reserves the right to make any modification.

5.1.3.2 Standard library

The GenLoc 54e contains the standard library.

Connect the RS232 link between the DTE (COM port) and the modem (DCE).

Set the RS232 port of the DTE as follows:

- Bits per second: 115 200 bps,
- Data Bits: 8,
- Parity: None,
- Stop Bits: 1,
- Flow control: without.

Use a communication software like Windows HyperTerminal ®.

Example of display when the standard library is present inside the equipment

```
*************************************************************
00:00:00  flash_start_flash: new Flash handle - WAIT
00:00:00  EGM_INIT_SOFTWARE_RESET
00:00:00  Ext2: EGM_FCM_EVENT_FLOW_OPENNED
00:00:00  READY
00:00:00  Gprs_Call_State : GPRS_CALL_INIT
00:00:00  UTC Time field not valid
00:00:00  Date field not valid
00:00:01  Supply status: External supply connected
00:00:02  Analog input 3 State H
00:00:02  sim inserted
00:00:02  PIN code not required
00:00:02  GSM Ready
00:00:03  +CCLK: "12/07/30,09:29:45+00"
00:00:03  Got GSM clock info
00:00:03   *** IMEI: 358696048201787, product: "GenLoc54e"
EaseLoc V300b2_EGM403b24 - GenLoc54e - LEON-G100-06S-00 - Thu Jun 21 09:18:01
2012
00:00:03  PHB Ready
00:00:03  sim ready
00:00:07  SMS Ready
00:00:09  Network ready
00:00:09  network_gprs_state: 1
00:00:23  CREG OK : 1
```

Send the command AT+EGM3

The modem returns the version of the library

```
+EGM3: genapi V4.04, Date: Thu Nov 15 13:57:42     2012
```

In the case where no communication can be established with the modem:

- Check the RS232 connection between the DTE and the modem (DCE),
- Check the configuration of the COM port of the DTE

For more information about these AT commands and their associated parameters, see the documents "Commands List EG_EGM_CL_xxx_yy" of ERCO & GENER.

Descriptions and non-contractual illustrations in this document are given as an indication only.
ERCO & GENER reserves the right to make any modification.

5.1.3.3 The application ERCO & GENER EaseLoc_Vx

The GenLoc 54e contains the application EaseLoc_Vx.

Send the command ATI8. The modem returns the version (example of display)

```
EaseLoc V300b2_EGM403b24 - GenLoc54e - LEON-G100-06S-00 - Thu Jun 21 09:18:01
2012
```

For more information about these AT commands and their associated parameters, see the documents "Commands List EG_EaseLoc_Vx_CL_yyy_UK" of ERCO & GENER.

5.1.3.4 The owner application

The GenLoc 54e contains your application.

Connect the RS232 link between the DTE (COM port) and the modem (DCE).

Set the RS232 port of the DTE according to your parameters (speed, data bits, parity and stop bit).

Use a communication software like Windows HyperTerminal ®.

Check the display and the dialogue with the GenLoc 54e according to your own characteristics.

5.1.4 SIM card extraction

To remove the SIM card from the modem, it is recommended to do the following operations with the modem turned OFF:

- Remove the SIM card cover on the back side.
- Press the SIM card (simple pressure) until hearing a "clic" that ensures its ejection.
- Remove delicately the SIM card from the reader.
- Put the SIM cover back.

5.1.5 Hardware reset of the modem

To trigger a Hardware reset of the modem, a RESET signal (hardware) is available on the pin 10 of the 16-pin Micro-FIT connector (RESET).

The Reset of the modem is done when the RESET signal (pin 10) is held at a low level during 10ms.

This signal must be considered as a way of reseting the modem in case of emergency only.
For more details concerning the modem RESET, see paragraph 7.7.2 RESET

See the table of paragraph 8.2.7 RESET signal for the electrical characteristics.

5.2 Specific recommendations for use of the modem in vehicles

The power supply connector of the modem GenLoc 54e must **NEVER** be connected directly to the battery of the vehicle.

5.2.1 Recommended connection on the battery of a truck

All trucks have a circuit breaker outside the cabin. The circuit breaker is used for security reasons: for example, if a fire breaks out in the electric box of the truck, the driver can cut off the power source and avoid more damage (explosion).

The circuit breaker is connected to the ground of the truck, usually connected to the fuse box.

Most of truck circuit breakers do not cut the PLUS of the battery, but cut its ground.

Figure 17 : Recommended connection on the battery of a truck

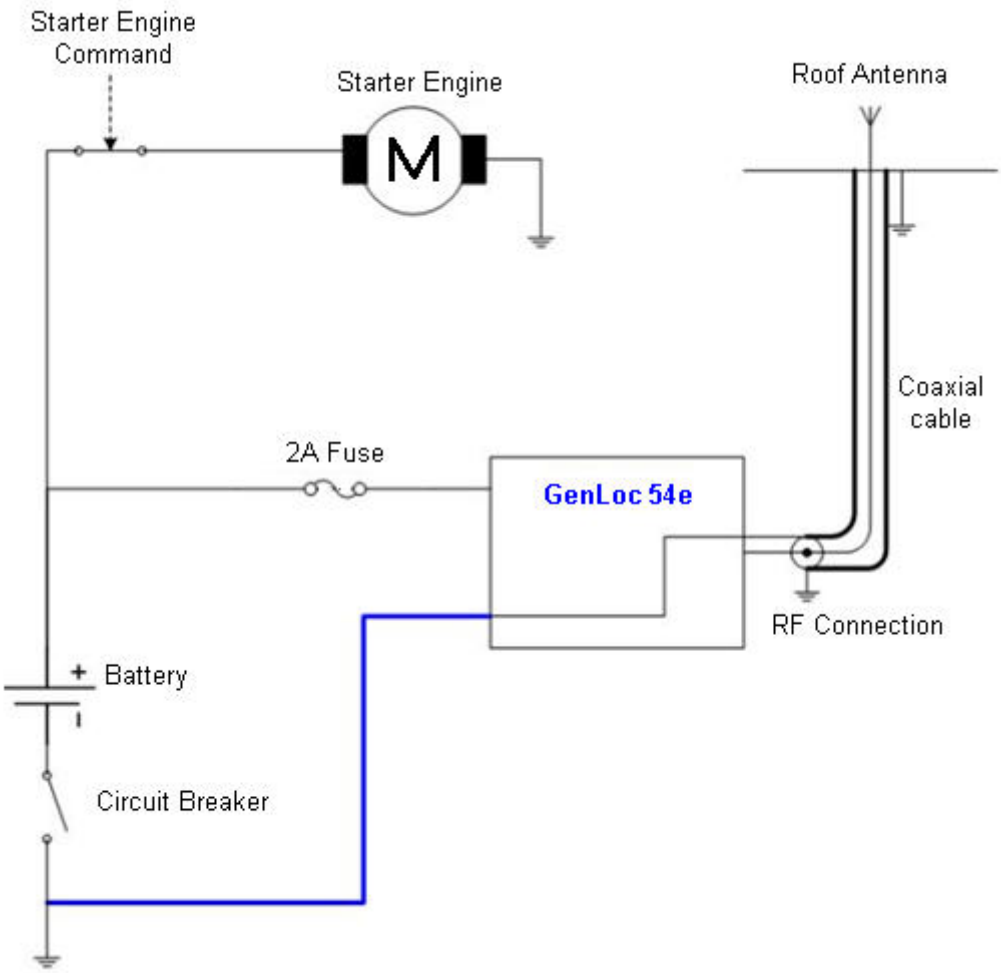

The scheme above shows a recommended power connection where the connection of the modem ground is not directly connected to the battery, but connected after the circuit breaker (on the ground of the truck or in the fuse box).

Descriptions and non-contractual illustrations in this document are given as an indication only.
ERCO & GENER reserves the right to make any modification.

5.2.2 Technical constraints in trucks

It is highly recommended **NOT** to connect the modem power supply directly to the battery but to the circuit breaker. Otherwise the modem can be damaged at the ignition of the truck if the circuit breaker is closed (in this case, the ground of the truck and the ground of the battery will be connected via the modem as described in the scheme below).

Figure 18 : Forbidden electrical connection (risk of damage on the modem)

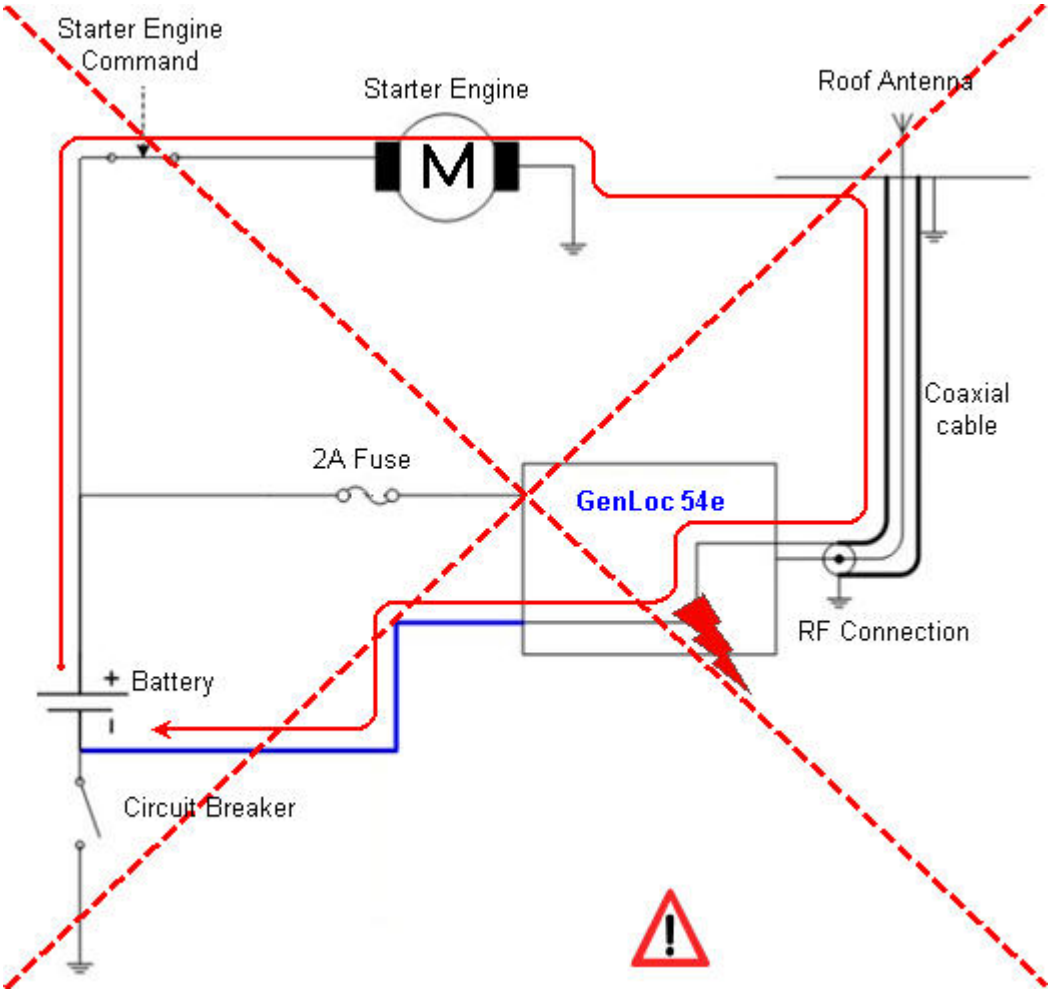

The scheme above shows an example of electrical connection that could damage the modem due to the fact that the ground connection is directly connected to the battery ground.

In fact in this example, when the circuit breaker is open, the current escapes via the modem and the electrical circuits of the trucks (the dashboard for example). And when the motor's starter is used, it will destroy the cables or the modem.

Moreover, the internal circuits of the modem are not designed to resist to a current of 60 A (during ignition of the truck), or they would be destroyed.

Descriptions and non-contractual illustrations in this document are given as an indication only.
ERCO & GENER reserves the right to make any modification.

5.3 Leds of the modem

5.3.1 GSM led of the modem

5.3.1.1 Without application

The GenLoc 54e does not contain any application. The led is OFF.

5.3.1.2 With standard library

The GenLoc 54e contains the standard library. The led is OFF.

5.3.1.3 The application ERCO & GENER EaseLoc_Vx

The status of the GSM module is indicated by the status of the YELLOW GSM LED situated on the back side of the modem. This is the yellow LED situated on the left side between the SIM reader and the antenna connector (see paragraph 3.1.2 Back side).

Table 13 : Status of GSM LED

Status of GSM LED	LED activity	GSM status
OFF	LED OFF	The module is not activated or OFF.
ON	LED permanent	The module is attaching to GSM network.
LED flashing	0.5s ON / 1.5s OFF	The module is attached to the GSM network.
LED flashing	0.2s ON / 0.6s OFF	The module is in communication data, voice or GPRS.

5.3.1.4 Owner application

The GenLoc 54e contains your application. The led status depends on your parameters.

5.3.2 GPS led of the modem

The positioning status of the modem is indicated by the status of the GREEN GPS LED situated on the back side of the modem. This is the green LED situated on the right side between the SIM reader and the antenna connector (see paragraph 3.1.2 Back side).

Table 14 : Status of GPS LED

Status of GPS LED	LED activity	GPS status
OFF	LED OFF	The GPS is not activated or the GPS is searching for satellites.
ON	LED flashing	The GPS is synchronized with different satellites. It found its position.

Descriptions and non-contractual illustrations in this document are given as an indication only.
ERCO & GENER reserves the right to make any modification.

5.3.3 Led 3

This led is free. It is left at the user's disposal. It is controlled via a command through the ARM.

AT+GPIOEXTSET=57,1 to switch on.
AT+GPIOEXTSET=57,0 to switch off.

5.3.4 Led 4

This led is free. It is left at the user's disposal. It is controlled via a command through the ARM.

AT+GPIOEXTSET=56,1 to switch on.
AT+GPIOEXTSET=56,0 to switch off.

5.3.5 Led 5

This led is free. It is left at the user's disposal. It is controlled via a command through the ARM.

AT+GPIOEXTSET=55,1 to switch on.
AT+GPIOEXTSET=55,0 to switch off.

5.3.6 Led 6

This LED is coupled with the switched power supply output. It is controlled with a command through the ARM.

AT+GPIOEXTSET=54,1 to turn ON and switch the power supply on the pin 9 of the 14-pin Micro-FIT.
AT+GPIOEXTSET=54,0 to turn OFF and remove the power supply from the pin 9 of the 14-pin Micro-FIT..

5.4 Echo function of AT commands deactivated

The modem contains the EGM standard library (see the documents "EG_EGM_CL_xxx_yy" of ERCO & GENER); in this case, if no echo is returned when entering an AT command, it means that:

- the "local echo" of your communication software (like Hyperterminal) is not activated,
- the echo function of the modem has been deactivated.

The echo function can be set with the command ***ATE***, it requires a back-up with the command ***AT&W***.

To activate the echo function of the modem, enter the command ***ATE1***.

When sending AT commands to the modem using a communication software, it is recommended to:

- Deactivate the "local echo" parameter in your communication software (like Hyperterminal),
- Activate the echo function of the modem (the command ***ATE1***).

For a communication Machine to Machine with the modem, it is recommended to deactivate the echo function of the modem (the command ***ATE0***) in order to avoid the CPU receiving redundant responses.

For more information about the ***ATE*** commands, see the document "EG_EGM_CL_xxx_yy" of ERCO & GENER.

Descriptions and non-contractual illustrations in this document are given as an indication only.
ERCO & GENER reserves the right to make any modification.

5.5 Checking the quality of the GSM reception signal

The modem contains the EGM standard library (see the documents "EG_EGM_CL_xxx_yy" of ERCO & GENER); in this case, the modem will be able to make a call only if the received GSM signal is powerful enough.

The command ***AT+CSQ*** allows to know the reception level (***rssi***) of the signal sent by the closest GSM Base Transceiver Station (BTS), as well as the reception error code (*g*).

When the SIM card is inserted and the PIN code entered, the command ***AT+CSQ*** allows to measure the signal from the BTS of the subscribed operator network.

This command cannot be used without the SIM card.

To check the quality of the GSM signal, do the following operations:

Use a communication software like Hyperterminal, enter the command *AT+CSQ*.

The response is in the following format:

+CSQ : <rssi>, <ber> with:

<***rssi***> = indicates the reception level,

<***ber***> = receive bit error rate.

Check the returned value <***rssi***> with the help of the table below.

Table 15 : Value RSSI

Value of <*rssi*>	Gain in dbm	Interpretation	Value of <*ber*>	Interpretation
0	-113 dbm	Insufficient	0 to 7	See standards ETSI GSM 05.08
1 to 10	-111 to -95 dbm	Insufficient		
11 to 30	-93 to -53 dbm	Sufficient		
31 (max)	-51dbm	Perfect		
99		Unknown/not detectable	99	Unknown/not detectable

The GSM modem works normally with a minimum <***rssi***> between 11 and 15.

Below 10, the signal level is insufficient; the modem cannot work depending on the geographical situation or the vehicle mobility. Above 15, the signal is sufficient.

For more information about AT commands, see the document "EG_EGM_CL_xxx_yy" of ERCO & GENER.

Descriptions and non-contractual illustrations in this document are given as an indication only.
ERCO & GENER reserves the right to make any modification.

5.6 Verification of the PIN code

The modem contains the EGM standard library (see the documents "EG_EGM_CL_xxx_yy" of ERCO & GENER); in this case, the PIN code is essential in order to make a call or to accept a response coming from the GSM network. This code is held in the SIM card and can be modified by the user.

To check that the PIN code has been entered, use a communication software like Hyperterminal, and enter the command ***AT+CPIN?***

The table below shows the main responses given by the modem:

Table 16 : Verification of the PIN code

Command	Response	Interpretation
AT+CPIN?	**+CPIN : ERROR**	The SIM card is absent or not recognized
	+CPIN : READY	The PIN code is correct
	+CPIN : SIM PIN	The PIN code is wrong or not entered yet
	+CPIN : SIM PUK	The PUK code is required

For more information about AT commands, see the document "EG_EGM_CL_xxx_yy" of ERCO & GENER.

5.7 Verification of the modem registration on the GSM network

The modem contains the EGM standard library (see the documents "EG_EGM_CL_xxx_yy" of ERCO & GENER); in this case:

1. Make sure that a valid SIM card is inserted in the SIM card reader of the modem.
2. Using a communications application like HyperTerminal, enter the following AT commands:
   a. ***AT+CPIN="xxxx"*** to enter the PIN code. The user has only 3 attempts to enter the PIN code. After the third attempt, only a second code (code PUK) supplied by the operator, will allow you to choose a new PIN code.
   b. ***AT+CREG?*** to check the registration status on the network. The response will be of the following format: +***CREG*** *:* <***mode***>*,* <***stat***> with:

   <***Mode***> = configuration of the registration message not solicited,

   <***Stat***> = registration status.
3. Check the registration status according to the value returned in the table below.

Table 17 : Verification of modem registration on GSM network

Command	Response	Interpretation
AT+CREG?	**+CREG : 0,0**	The modem is not recognized by the network.
	+CREG : 0,2 or 0,3	The modem is searching for a network operator.
	+CREG : 0,1	The modem is attached in GSM to the local operator.
	+CREG : 0,5	The modem is attached in GSM to the roaming operator.

Descriptions and non-contractual illustrations in this document are given as an indication only.
ERCO & GENER reserves the right to make any modification.

If the modem is not registered: check the connection between the modem and the antenna or the reception level of the signal (cf. paragraph 5.5 Checking the quality of the GSM reception signal).

For more information about AT commands, see the document "EG_EGM_CL_xxx_yy" of ERCO & GENER.

5.8 Reading a current position given by the GPS

The modem contains the EGM standard library (see the documents "EG_EGM_CL_xxx_yy" of ERCO & GENER); in this case, the reading of a GPS position can be done with the command ***AT+GPSPOS***. This command allows to get the information received of the current position. After powering ON the modem, an acquisition time is necessary (around 45 seconds).

The response is in the following format and the table shows examples of responses:

+GPSPOS:<fix>,<time>,<date>,<latitude>,<longitude>,<altitude>,<hdop>,<speed>,<direction>,<nbsat>

<**fix**>
0 invalide fix
1 2D fix
2 3D fix
-1 impossible to define a position

<***time***> : hhmmss.zz
example : 083205.00 -> 8 hours 32 minutes 05 seconds and 00 hundredth of a second in UTC

<***date***> : ddmmyy
example : 180406 -> le 18 April 2006

<***latitude***> : ddmm.mmmmm(N/S)
dd (degree) 00 to 90
mm.mmmmm (minute) 00,00000 to 59,99999
N/S North or South
example : 4716.81310N -> latitude 47 degrees 16,81310 minutes North

<***longitude***> : dddmm.mmmmm(E/W)
ddd (degree) 00 to 180
mm.mmmmm (minute) 00,00000 to 59,99999
E/W East or West
example: 00003.51202W -> longitude 0 degree 0 3,51202 minutes West

<***altitude***> : mmmm.m in meter

<***hdop***> : mmm.mm horizontal dilution position in meters

<***speed***> : ssss.s ground speed in km/h

<***direction***> : dddmm.mmmm
ddd (degree) 000 to 360
mm.mmmm (minute) 00,0000 to 59,9999

<***nbre sat***> : nn number of satellites seen

Descriptions and non-contractual illustrations in this document are given as an indication only.
ERCO & GENER reserves the right to make any modification.

The following table shows examples of responses returned by this command.

Table 18 : Reading a current position given by the GPS

Command	Response	Interpretation
AT+GPSPOS	**+GPSPOS:-1,,,,,,,,,0**	It is not possible to define a position. Check the positioning of the GPS antenna or the GPS configuration (see paragraph 8.2.11.1 GSM external antenna)
	+GPSPOS:0,083138,180406,,,,,,,6	It is not yet possible to have a position but the time and date information are available. A complete frame should be obtained soon or the antenna position is not optimum (see paragraph 8.2.11.1 GSM external antenna)
	+GPSPOS:2,100237.00,300712,4716.80331 N,00003.51675W,77.5,1.05,0.305,,08	A position is read and all the information is available. The frame is considered as complete. The GPS LED is flashing.

5.9 Main AT commands (HAYES)

The modem contains the EGM standard library (see the documents "EG_EGM_CL_xxx_yy" of ERCO & GENER); in this case, the table below shows the main AT commands necessary for the control of the modem.

Other AT commands are available, see the document "EG_EGM_CL_xxx_yy" of ERCO & GENER.

Table 19 : Main AT commands used with the modem

Description	AT command	Response	Interpretation
Enter the PIN code	AT+CPIN="xxxx"	**OK**	PIN code accepted
	(xxxx = PIN code)	**+CME ERROR: 16**	PIN code incorrect (1*)
		+CME ERROR: 3	PIN code already entered (1*)
Verification of registration on the network	AT+CREG?	**+CREG : 0,1**	The modem is attached in GSM to the local operator.
		+CREG : 0,5	The modem is attached in GSM to the roaming operator.
		+CREG : 0,2	The modem is searching for a network operator.
		+CREG : 0,0 or 0,3	The modem is not recognized by the network.
Reception of an incoming call (2*)	ATA	**OK**	Reply to the call
Make an outgoing voice call	ATD<telephone number>;	**OK**	Communication established
	(the ; at the end of the sequence is important; it allows to make a voice call)	**+CME ERROR: 11**	PIN code not entered
		+CME ERROR: 3	The credit has run out or a communication is already established.
Make an emergency call (112)	ATD112;	**OK**	Communication established
Communication lost		**NO CARRIER**	
Hang-up	ATH	**OK**	

(1*) with ***+CMEE=1***. The command ***AT+CMEE=1*** allows the display of extended error codes; it is possible to save it with the command ***AT&W***.

By default, some event codes ***+EGEVT*** allow the display of status change of the SIM card (card present, card ready …) and allow to know some status of the modem (modem ready after a RESET…), see the Command List of ERCO & GENER.

(2*) with ***+CRC=1***. The command ***AT+CRC=1*** allows in the case of an incoming call to display an extended message that indicates the channel called. This message corresponds to the type of number called: voice, data, it is possible to save it with the command ***AT&W***.

Examples:

If the VOICE number is called, the modem replies: +CRING : VOICE

If the DATA number is called, the modem replies: +CRING : REL ASYNC

5.10 Turning OFF the modem

The modem contains the EGM standard library (see the documents "EG_EGM_CL_xxx_yy" of ERCO & GENER); in this case, it is strongly advised to un-register from the network with the command **AT+COPS=2**

There is no particular action to do on the GPS part before turning it OFF.

When the battery is present, a mechanism allows to stop completely the application if the external power supply is unplugged, and also to prepare the modem for storage or transport, in order to limit high discharges of the battery.
If the device is not used, it has to be deactivated by sending the following command:

- **If the modem has an application developed with EGM**, send the command ***AT+GPIOSET=35,0***
  And cut the external power supply of the modem.
- **If the modem does not contain any embedded application**, via the Boot-Loader menu

```
Bootloader V4.09 GL54 UA Gener Ublox (HWF1 rev D/E)
GSM voltage = 4330 mV
 1 - Update application
 2 - Erase objects
 M - GSM direct access (external supply required)
 A - Advanced
 P - Power off
 E - Exit
```

Enter "P"
And cut the external power supply of the modem.

Important Note: The switching of the battery and its auto-maintain will be automatically reactivated once the modem will be plugged to its external power supply.

5.1 Modem updating procedure

To be able to benefit from the latest functions of the GenLoc 54e, an updating procedure can be used to upgrade the software program in the modem.

This procedure consists in downloading the software into the internal Flash memory of the modem via the RS232 link available on the 9-pin Sub 9 connector.

Contact us for the software updating.

6 Trouble Shooting

This section of the document describes the problems that may be encountered when using the modem.

6.1 Problem of communication between the modem and the RS232 link (V24)

If the modem does not respond to the AT commands via the RS232 link, refer to the table below for the possible reasons and the solutions.

Table 20 : Solutions when there is no dialogue between the modem and the RS232 link

If the modem...	Check:	Action
Returns nothing	Is the modem correctly powered?	Ensure that the modem is connected to an external regulated power source and supplies a voltage from 5.5V to 32V (see paragraph 8.2.1 Power supply).
	Is the serial cable connected at both ends (PC and Modem)?	Check the connection of the serial cable.
	Is the serial cable correctly cabled according to the paragraph 3.2.2.3 14-wire micro FIT cable (Serial links)	Connect the serial cable according to the table of paragraph Micro FIT connectors .
Returns nothing or random characters	Is the communication terminal correctly configured on the PC?	Ensure that the configuration of the communication terminal complies with the one of the modem. Factory configuration of the modem: Without application (BootLoader) or standard library or EaseLoc_Vx application Speed = 115 200 bps Data Bits = 8 Parity = none Stop Bits = 1 Flow control = material Owner application speed, data bits, parity and stop bit according to your parameters
	Is there another application used, creating a conflict during the access to the communication port?	Close the conflicting application.
	Is the modem without echo and without reporting?	Send the command ***ATE1Q0**** followed by ***AT&W*** if a backup is required.

* Only if the GenLoc 54e has the application EaseLoc_Vx

Descriptions and non-contractual illustrations in this document are given as an indication only.
ERCO & GENER reserves the right to make any modification.

6.2 "ERROR" message

This paragraph is valid only if the modem contains the EGM standard library or the EaseLoc_Vx application.

The modem returns a message "***ERROR***" (in response to an AT command) in the following cases:

- The COM port is not directed to the modem GenLoc 54e but to another modem. Enter ***ATI***, and the response must be ***LEON-G100-06S-00***. Any other response indicates a dialog with another modem. In this case, check the COM port used in the Hyperterminal.
- The syntax of the AT command is incorrect: check it (see the document "EG_EGM_CL_xxx_yy" of 'ERCO & GENER"
- The syntax of the AT command is correct, but transmitted with wrong parameters:
  - Enter the command ***AT+CMEE=1*** to obtain an error message with its error code instead of a simple "ERROR" message,
  - Enter again the AT command which previously caused the "ERROR" message in order to obtain the error code.

  In case of an error code, the response of the modem may be:

  +CME ERROR : < error code >

For more information about the error codes returned after having sent the command ***AT+CMEE***, see the document "EG_EGMCL_xxx_yy" of ERCO & GENER.

It is strongly recommended to systematically allow the modem to return the error codes (enter the command ***AT+CMEE=1***).

6.3 "NO CARRIER" message

This paragraph is valid only if the modem contains the EGM standard library or the EaseLoc_Vx application

If the modem returns the message "NO CARRIER" after an attempted call (voice or data), check the table below for the possible reasons and the solutions.

Descriptions and non-contractual illustrations in this document are given as an indication only.
ERCO & GENER reserves the right to make any modification.

Table 21 : Solutions when a message "NO CARRIER" is returned

If the modem...	Check:	Action
"NO CARRIER"	Is the received GSM signal strong enough?	See the paragraph 5.5 Checking the quality of the GSM reception signal .
	Is the modem registered on the network?	See the paragraph Verification of the modem registration on the GSM network.
	Is the antenna correctly connected?	See the paragraph 5.7 Verification of the modem registration on the GSM network for the recommendations about the GSM antenna installation.
"NO CARRIER" (when attempting a VOICE call)	Has the semi-colon (;) been entered immediately after the telephone number in the AT command?	Ensure that the semi-colon (;) has been entered immediately after the telephone number in the AT command. For example : ATD0123456789;
"NO CARRIER" (when attempting a DATA communication)	Has the SIM card been configured for data calls?	Ensure that the SIM card is allowed to make data calls (check with your SIM card supplier)
	Is the selected modulation type supported by the called number?	Ensure that the selected modulation type is supported by the called number.
	Is the selected modulation type supported by the network?	Ensure that the selected modulation type is supported by the network. If not, select a compatible modulation type with the command ***AT+CBST=0,0,1*** (1*)

(1*) For more information about this AT command, see the document "EG_EGM_CL_xxx_yy" of ERCO & GENER.

If the modem returns the message "NO CARRIER", you can get the extended error code with the command ***AT+CEER***.

For more information about the error codes returned after having sent the command ***AT+CEER***, see the document "EG_EGM_CL_xxx_yy" of ERCO & GENER.

Descriptions and non-contractual illustrations in this document are given as an indication only.
ERCO & GENER reserves the right to make any modification.

7 Functional description

7.1 Architecture

Figure 19 : Functional architecture

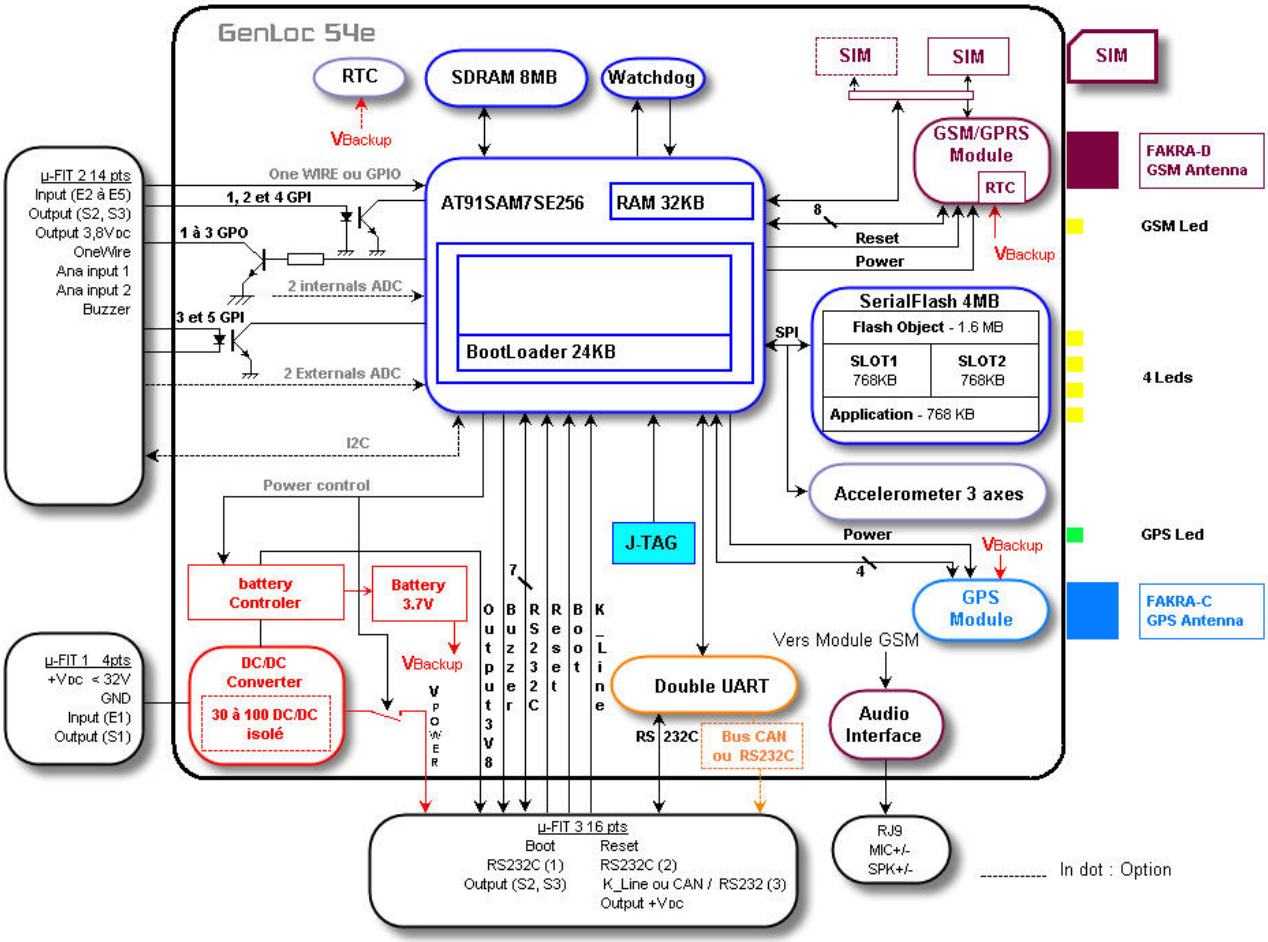

7.2 Power supply

7.2.1 General presentation

The modem must be powered by an external DC voltage (V+BATTERY) between +7.2V and +32V.

The regulation of the modem power supply is made with a DC/DC internal converter in order to supply all the necessary internal DC voltages.

For the GPS module, another regulation is made for its internal power supply.

A correct functioning of the equipment is not guaranteed if the Input voltage (V_{DC}) falls below 7.2 V and if the battery is not charged enough.

7.2.2 Internal battery

7.2.2.1 Presentation of the internal battery

The battery is fixed inside the GenLoc 54e. It is connected to an additional charging circuit cabled on the motherboard of the GenLoc 54e.

This battery allows to maintain the GenLoc 54e functioning in case of absence of its external power supply (power supply connected on the Micro-FIT 4-pin female connector).

The internal charging circuit allows to keep permanently the charge of the battery from the external power supply.

When the battery is completely discharged, 3 hours are necessary to obtain a new complete charge. It is normal if the box is becoming a little bit hot in this case.

The autonomy of the battery essentially depends on the mode of use of the GenLoc 54e (attachment in GSM/GPRS, Inputs/Outputs, GPS power supply, RS232 connected...).

As an information, the autonomy is around 9H with the following conditions:

- GSM attached to GPRS network without data transfer.
- Serial link not connected.
- GPS OFF
- No Input Output connected

When the temperature exceeds 45 °C inside the box, the protection of the battery management triggers. The battery will not be charged.

If the battery is present, prepare the modem for storage or transport conditions, in order to limit high discharges of the battery. For that, see § 5.10 Turning OFF the modem

Descriptions and non-contractual illustrations in this document are given as an indication only.
ERCO & GENER reserves the right to make any modification.

7.2.2.2 Specifications of internal battery

The external power supply of the GenLoc 54e remains unchanged (from +7,2V to 32V DC). The internal regulator of charge supplies the 4.2V voltage necessary for the battery charge.

Table 22 : Characteristics of the polymer lithium battery

Voltage (max.)	4.2V
Type	Lithium Polymer (LiPolymer)
Capacity	1000 mA/h typical
Exp. Cycle time	>300 cycles> 70% of initial capacity
Temperature range	Charge : 0°C to +45°C Discharge : -20°C to +60°C
Protection (Rearmable fuse)	Discharge voltage : 2.30V ±0.058V Maximum discharge current : 2A to 4A (1.0±0.3s)

7.2.2.3 Charge and power supply voltage

See paragraph 8.2.2.2 Consumption of battery charge @ 25 °C.

7.2.2.4 Indication of presence/absence of external power supply

The modem contains the EGM standard library (see the documents "EG_EGM_CL_xxx_yy" of ERCO & GENER); in this case, the command ***AT+GPIOGET=27*** allows to know the status of the external power supply for the internal battery.

AT+GPIOGET=27

<Index>

0 indication of presence of external power supply

1 indication of absence of external power supply

Table 23 : Examples of responses with the internal battery option cabled

Command	Response	Interpretation
AT+GPIOGET=?	+GPIOGET: (0-27) OK	Syntax
AT+GPIOGET=27	+GPIOGET: 27=0 OK	External supply present
AT+GPIOGET=27	+GPIOGET: 27=1 OK	External supply absent

For more information concerning this command, see the document EG_EGM_CL_xxx_yy of ERCO & GENER.

Descriptions and non-contractual illustrations in this document are given as an indication only.
ERCO & GENER reserves the right to make any modification.

7.2.2.5 Instructions and restrictions of use

When the battery is completely discharged, it takes around three hours to obtain a complete charge.

When the battery is connected and charged, it is not possible to do an ON/OFF of the device, only putting the Reset input (pin 10 of the 16-pin micro-FIT connector) to the ground or sending the command ***AT+EGMRST*** allows a reset of the modem.

The battery cannot be replaced or modified by the user; the device must not be opened for any intervention on the battery: the device must be returned to the factory.

Do not throw the modem and the battery on the fire.

7.2.3 Protections of the power supply

The modem is protected by a F2 A / 32 V fuse directly assembled on the power supply cable supplied with the modem.

Fuse reference : Mini Blade for automobile 2A - 32V (color code : grey)

The modem is also internally protected against voltage peaks of more than 32 V.

Filter guarantees: EMI/RFI protection in Input and Output and signal smoothing.

It is necessary to use the power supply cable delivered with the modem; otherwise the modem will not be protected.

7.3 RS232 serial link

The RS232 interface provides an adaptation of the voltage levels (V24/CMOS ⇔ V24/V28) between the GSM/GPRS module (DCE) and a communication Port of a PC (DTE).

The RS232 interface is internally protected (ESD protection) against electrostatic peaks coming from the RS232.

Filter guarantees: EMI/RFI protection in Input and Output and signal smoothing.

The RS232 interface was designed to allow a certain flexibility in the use of the serial interface signals.

In fact, after the setting (see command AT+IFC) if the GenLoc 54e contains the EGM standard library (see the documents "EG_EGM_CL_xxx_yy" of ERCO & GENER), in this case, the modem can work in 3-wire mode (using only the signals TX, RX, GND), but the use of the signals TX, RX, GND, CTS, RTS is required for a GPRS application.

Descriptions and non-contractual illustrations in this document are given as an indication only.
ERCO & GENER reserves the right to make any modification.

7.3.1 Serial link RS232_0

The signals of the RS232_0 are available on the 16-pin Micro FIT connector and on the 9-pin Sub D connector. (see chapter 3.2.2.3 14-wire micro FIT cable (Serial links))

TX data (CT103/TX_0) .....: Data transmission,
RX data (CT104/RX_0) .....: Data reception,
Request To Send (CT105/RTS_0) .....: Request to send,
Clear To Send (CT106/CTS_0) .....: Ready to send.

Figure 20 : Normalized signals of the serial link RS232_0

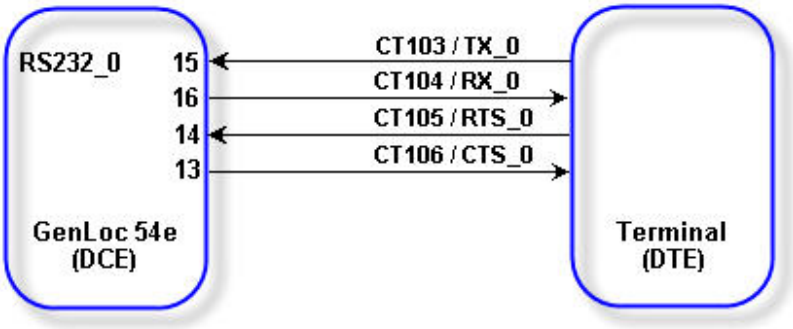

Table 24 : Description of pins of serial link RS232_0

Signal	16-pin Micro FIT connector Pin N°	I/O	RS232	Description	Sub D 9-pin connector Pin N°
CT103 / TX_0	15	I	TX	Transmit serial data	3
CT104 / RX_0	16	O	RX	Receive serial data	2
CT105 / RTS_0	14	I	RTS	Request To Send	7
CT106 / CTS_0	13	O	CTS	Clear To Send	8
GND	12			Ground	5

7.3.2 Serial link RS232_1

The signals of the RS232_1 are available on the Micro FIT 16-pin connector and on the cable. (see chapter 3.2.2.3 14-wire micro FIT cable (Serial links))

TX data (CT103/TX_1) .....: Data transmission,
RX data (CT104/RX_1) .....: Data reception,
Clear To Send (CT105/CTS_1) .....: Ready to send,

Descriptions and non-contractual illustrations in this document are given as an indication only.
ERCO & GENER reserves the right to make any modification.

Figure 21 : Normalized signals of serial link RS232_1

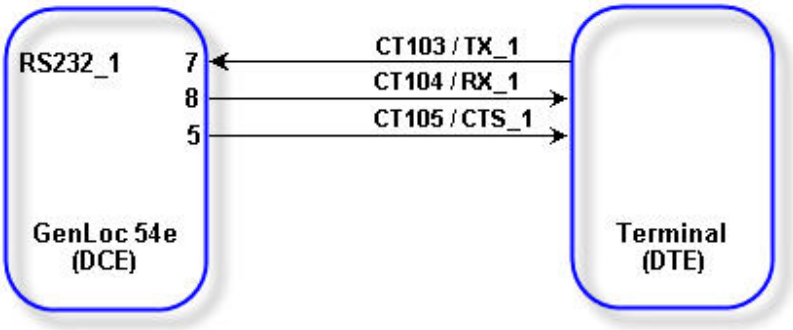

Table 25 : Description of pins of serial link RS232_1

Signal	16-pin Micro FIT connector Pin N°	I/O	RS232	Description	Color of wire
CT103 / TX_1	7	I	TX	Transmit serial data	White/Green
CT104 / RX_1	8	O	RX	Receive serial data	White/Blue
CT105 / CTS_1	5	O	CTS	Clear To Send	White/Brown
GND	4			Ground	Black

7.3.3 Serial link K_Line (ISO 91141-2)

The signal on this pin is electrically compatible with the information can come from a tachograph or K-Line interface. It also works well in reading and writing.

Figure 22 : K_Line signal

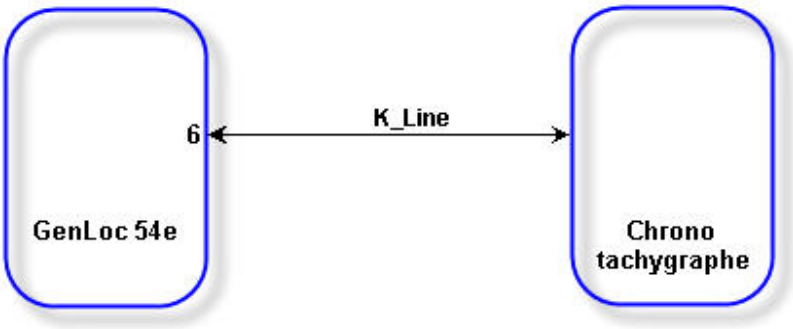

Table 26 : Description of pin K_Line

Signal	16-pin Micro FIT connector Pin N°	I/O	Description	Color of wire
K_Line	6	I/O	Data of chrono-tachograph.	White/Yellow

7.3.4 Serial link RS232_2 / Bus CAN

As an option, it is possible to have a third serial link (contact us).

It can be with the RS232 standards or the CAN standards.

7.3.4.1 RS232_2

The signals of the RS232_2 are available on the 16-pin Micro FIT connector and on the cable. (see chapter 3.2.2.1 16-wire micro FIT cable)

TX data (CT103/TX_2) .....: Data transmission,

RX data (CT104/RX_2) .....: Data reception.

Figure 23 : Normalized signals of serial link RS232_2

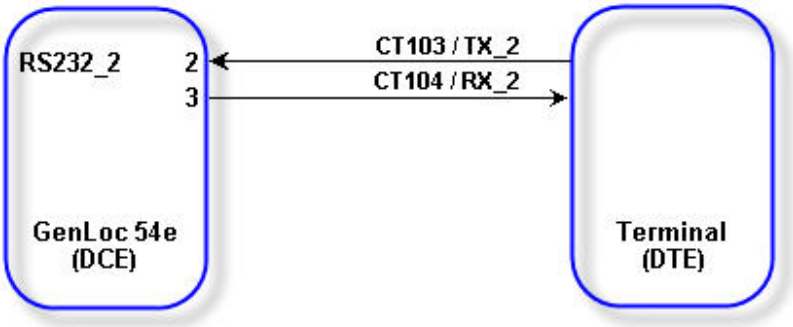

Table 27 : Description of pins of serial link RS232_2

Signal	16-pin Micro FIT connector Pin N°	I/O	RS232	Description	Color of wires
CT103 / TX_2	2	I	TX	Transmit serial data	Violet
CT104 / RX_2	3	O	RX	Receive serial data	White/Violet
GND	1			Ground	Black

7.3.4.2 CAN Bus

The signals of the bus CAN are available on the Micro FIT 16-pin connector and on the cable. (see chapter 3.2.2.3 14-wire micro FIT cable (Serial links))

The data transmission is done on a differential wire pair. The line is then made of 2 wires,

CANH ..... : Positive differential line,

CANL ..... : Negative differential line.

Descriptions and non-contractual illustrations in this document are given as an indication only.
ERCO & GENER reserves the right to make any modification.

Figure 24 : Normalized signals of serial link CAN

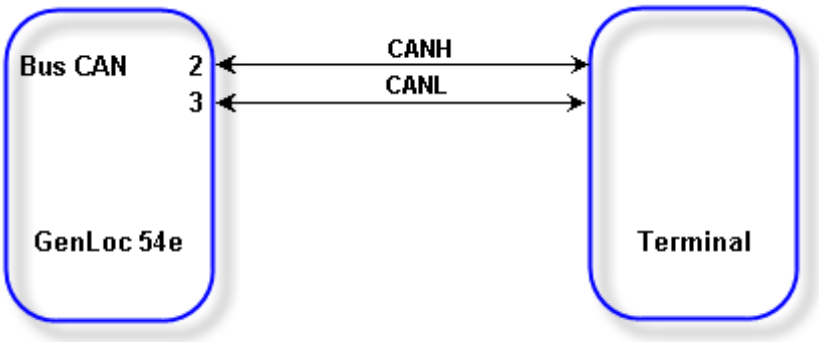

Table 28 : Description of pins of serial link CAN

Signal	16-pin Micro FIT connector Pin N°	I/O	CAN	Description	Color of wires
CANH	2	I/O	CAN High	Positive differential line	Violet
CANL	3	I/O	CAN Low	Negative differential line	White/Violet
GND	1			Ground	Black

Descriptions and non-contractual illustrations in this document are given as an indication only.
ERCO & GENER reserves the right to make any modification.

7.4 Inputs/Outputs functioning

The GenLoc 54e provides five Inputs (opto-coupled) with 2 completely insulated, three Outputs (open collector) and two analog Inputs available for an external use.

The modem contains the EGM standard library (see the documents "EG_EGM_CL_xxx_yy" of ERCO & GENER); in this case, these functions can also be controlled by AT commands:

AT+GPIOSET for a writing access to a GPIO used as an output,

AT+GPIOGET for a reading access to the GPIO used as an input.

***AT+* xxxx** for a reading access of the GPIO used as an analog input. Contact us.

7.4.1 Management of logical outputs

The modem contains the EGM standard library (see the documents "EG_EGM_CL_xxx_yy" of ERCO & GENER); in this case, these functions are controlled by AT commands.

AT+GPIOSET This command is used to drive the output. By default, the output S1 to S3 are cabled as an open collector assembly. To control it:

AT+GPIOSET=<n>,<x> with**:**

<***n***> = 10 : writing of Output S1

18 : writing of Output S2

19 : writing of Output S3

<***x***> = 0 : Output OFF

1 : Output ON

Table 29 : Example of management of logical Outputs

Command	Response	Interpretation
AT+GPIOSET=10	***+GPIOSET: 10=1*** ***OK***	Output 1 at OFF, transistor closed
AT+GPIOSET=10,0	***OK***	Output 1 goes to ON (transistor open)

See Table of paragraph 8.2.4.3 Output for the characteristics of use of the Inputs/Output

Descriptions and non-contractual illustrations in this document are given as an indication only.
ERCO & GENER reserves the right to make any modification.

7.4.2 Management of logical Inputs

The modem contains the EGM standard library (see the documents "EG_EGM_CL_xxx_yy" of ERCO & GENER); in this case, these functions are controlled by AT commands.

AT+GPIOGET This command is used to read the Inputs. By default, the inputs 1 to 5 are opto-coupled. To read:

AT+GPIOGET=<n> with:

<***n***> = 7 : reading the Input E1
8 : reading the Input E2
9 : reading the Input E3
36 : reading the Input E4
37 : reading the Input E5

Table 30 : Example of management of logical Inputs

Command	Response	Interpretation
AT+GPIOGET=7	***+GPIOGET: 7= 1*** ***OK***	Input 1 read at 1, the input 1 is not commanded
AT+GPIOGET=9	***+GPIOGET: 9= 0*** ***OK***	Input 3 read at 0, the input 3 is commanded

See Table of paragraph 8.2.4.1 Opto-coupled inputs for the characteristics of use of the Inputs/Output

7.4.3 Management of analog Inputs

The modem contains the EGM standard library (see the documents "EG_EGM_CL_xxx_yy" of ERCO & GENER); in this case, these functions are controlled by AT commands.

AT+EGADC This command is used to read the Inputs. To read:

AT+EGADC=<n> with:

<***n***> = 0 : reading the tension of GPS antenna
1 : reading the Input ANA1
2 : reading the Input ANA2
3 : reading the internal voltage
4 : reading the input voltage
8 : reading the reference voltage

Table 31 : Example of management of analog Inputs

Command	Response	Interpretation
AT+EGADC=?	***+EGADC: (0-4,8),(0-65535),(0-65535),"+/-(0-32767)"*** ***OK***	Range value
AT+EGADC=3	***+EGADC: 3,4375*** ***OK***	Reading of internal voltage. It is at 4375 mV

AT+EGADC=1	***+EGADC: 1,0000*** ***OK***	Reading of Input ANA1. It is at 0000 mV

See Table of paragraph 8.2.4.4 Analog input for the characteristics of use of the analog Inputs.

7.5 Option 2nd SIM card reader

Contact us.

7.6 BOOT

This signal must NOT be connected, NOT used. Its use is strictly reserved for the manufacturer.

The use of the BOOT function is strictly reserved to the manufacturers and distributors.

7.7 RESET

7.7.1 General presentation

This signal allows to make a Hardware RESET of the modem. In fact, this pin is used to force a RESET of the GenLoc 54e, doing a low level during at least 10 ms.

This signal must be used only in case of emergency RESET.

This signal must be driven with an open collector assembly:

- pin 10 (RESET) at 0, for the Reset of the GenLoc 54e,
- pin 10 (RESET) at 1, for normal mode.

Table 32 : Description of the RESET signal pin

Signal	14-pin connector Pin N°	I/O	Type I/O	Description
RESET	10	I/O	SCHMITT	Reset Modem

Pin description

The use of the RESET function is strictly reserved to the manufacturers and distributors.

This signal must be used only in case of emergency RESET. A software RESET is always preferable to a Hardware RESET. It is strongly unadvised to execute this function whilst in communication or dialog, without having previously detached it from the operator network. Using the RESET does not restore the factory parameters.

For more information about the Software RESET, see the document "EG_EGM_CL_xxx_yy" of ERCO & GENER in paragraph 5.10 Turning OFF the modem to turn the device OFF and detach correctly the modem from the network operator.

See Table of paragraph 8.2.7 RESET signal for the characteristics of use of the RESET

7.7.2 RESET sequence

To activate the emergency RESET sequence, the RESET signal must be put at a low level during at least 10 ms.

A soon as the modem has been RESET, if a SIM card is inserted inside the SIM reader of the GenLoc 54e you must wait for the end of the initialization before accessing it again. Moreover, the acquisition time of a GPS position will also have to be taken into consideration.

Figure 25 : Chronogram of RESET signal

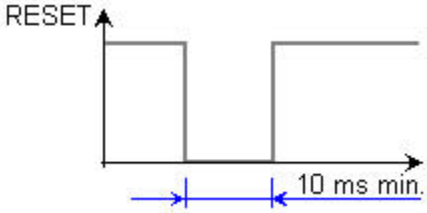

Using the RESET does not restore the factory parameters.

7.8 WatchDog

The Hardware WatchDog function allows the surveillance of the GenLoc 54e software activity: the Software management of the WatchDog is implanted in the embedded application by default. In the case of a development (EGM) it must be implanted in the embedded application of the final customer.

If the software activity is interrupted, the WatchDog component triggers a hardware Reset.

The WatchDog function is active only if the SIM card is present. That's why, it is imperative to remove the SIM card during a Firmware updating.

Descriptions and non-contractual illustrations in this document are given as an indication only.
ERCO & GENER reserves the right to make any modification.

7.9 Audio

The modem contains the EGM standard library (see the documents "EG_EGM_CL_xxx_yy" of ERCO & GENER); in this case, the audio interface is standard to connect an equipment like a telephone handset.

The echo cancelation (see command AT+UMGC) and noise reduction features are also available to improve the audio quality in the case of free-hand applications.

The audio interface is standard to connect a telephone handset (the command AT+UHFP allows the selection of the Handset, see the document "EG_EGM_CL_xxx_yy" of ERCO & GENER).

Table 33 : Description of connector RJ9

	RJ9
Micro -	1
Speaker -	2
Speaker +	3
Micro +	4

7.9.1 Microphone inputs

The microphone inputs are assembled in differential to reduce the noise in common mode and the TDMA noise.

They already include the functionality for a microphone like Electret (0.5 mA and 2 Volts) and they are ESD protected. This Electret microphone can be directly connected to these inputs allowing an easy connection to a telephone handset.

The microphone impedance is around 1.5 kΩ.

The gain of the microphone inputs is internally adjusted by a differential amplifier and can be adjusted with the command AT+UMGC (see the document "EG_EGM_CL_xxx_yy" of ERCO & GENER). The amplifier has a gain of 25.6 dB and a Bias generator that supplies an external voltage of 2 or 2.5V for the microphone Bias.

Table 34 : Description of micro Input of RJ9 connector

Signal	RJ9 connector Pin N°	I/O	Type of I/O	Description
MIC2P	4	I	Analog	Positive Input of Microphone
MIC2N	1	I	Analog	Negative Input of Microphone

7.9.2 Loudspeaker outputs (Speaker)

The outputs are assembled in differential to reduce the noise in common mode and the TDMA noise.

These outputs can be directly connected to a loudspeaker.

Table 35 : Description of loudspeaker output of RJ9 connector

Signal	RJ9 connector Pin N°	I/O	Type of I/O	Description
SPK2P	3	O	Analog	Positive Output of loudspeaker
SPK2N	2	O	Analog	Negative Output of loudspeaker

Descriptions and non-contractual illustrations in this document are given as an indication only.
ERCO & GENER reserves the right to make any modification.

7.9.3 Buzzer outputs

By default, the GenLoc 54e provides a Buzzer output on the output 14 of the 14-pin connector. This PWM output type provides a frequency, it is dedicated to drive a **Transducer**.

Table 36 : Description of buzzer Output

Signal	14-pin connector Pin N°	I/O	Type of I/O	Description
BUZZER	14	O	Analog	Buzzer Output

7.10 GPS module

The GenLoc 54e was designed from a GSM/GPRS module incorporating the communication functions in GSM or GPRS and a high-sensitivity 50-channels GPS module. Consequently, the GenLoc 54e is able to receive GPS positions with different filtering criteria if the modem contains the EGM standard library (see the documents "EG_EGM_CL_xxx_yy" of ERCO & GENER).

7.11 Accelerometer

The GenLoc 54e provides an accelerometer with 3 axis of sensitivity ±2G or ±8G controllable by software.

Figure 26 : positioning of the accelerometer axis

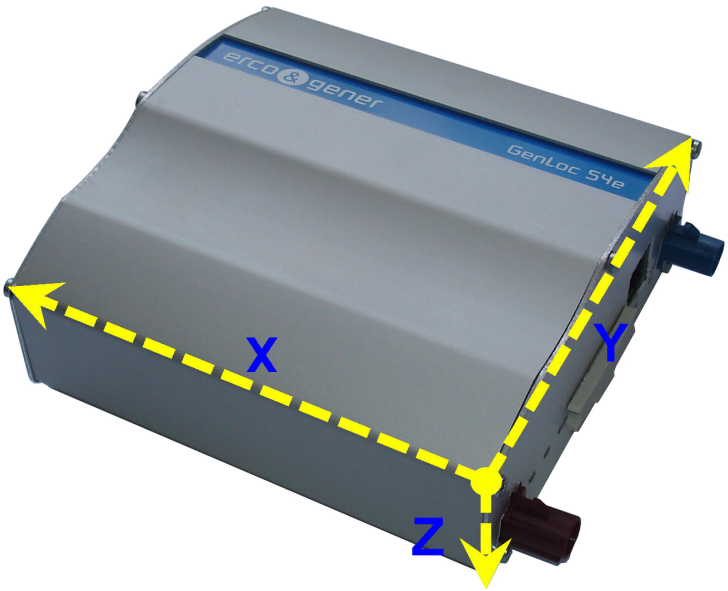

7.12 Internal processor

7.12.1 EGM presentation

The GenLoc 54e provides an ARM7 processor that allows to have an embedded application developed from the EGM libraries and based on eCos.

The EGM libraries supplied by ERCO &GENER contain the following elements:

- EGM software library,
- eCos software library,
- A set of header files (.h) defining the EGM API functions,
- Source code samples.

7.12.2 EGM architecture

The software architecture is described below.

Figure 27 : Software architecture

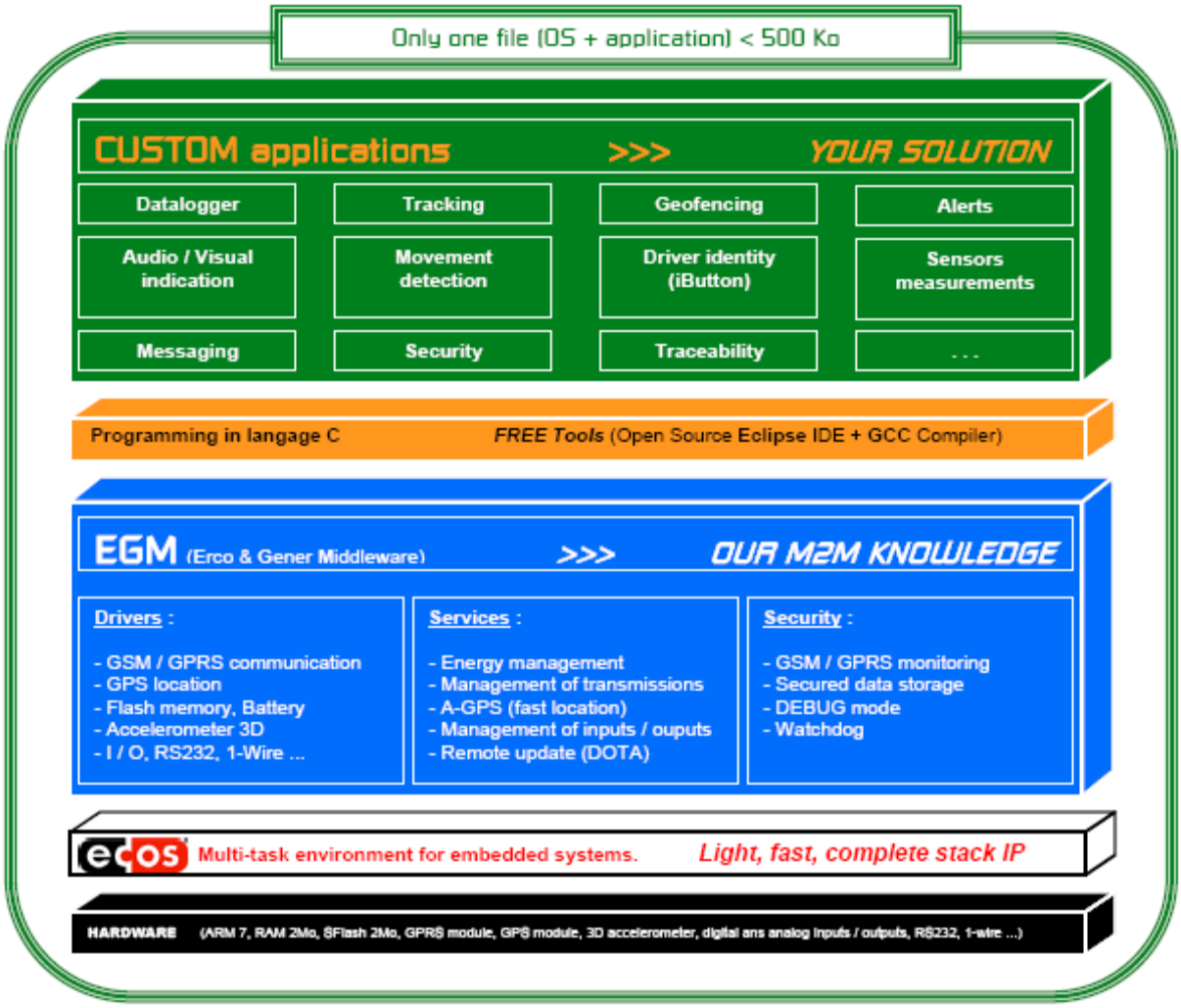

For more information about EGM, see the documents of ERCO & GENER for a description of the different functionalities.

8 Technical characteristics

8.1 Mechanical characteristics

Table 37 : Mechanical characteristics

Dimensions	95 x 92 x 40 mm (excluding connectors)
Complete dimensions	104 x 92 x 40 mm
Weight	≈ 206 grams (modem only) < 618 grams (modem + brackets + cables)
Volume	≈ 382 cm³
Casing	Aluminium Profile
Waterproof level	IP31

The illustration below shows the dimensions of the modem including the clearances necessary for the installation of the modem.

Figure 28 : Dimensions

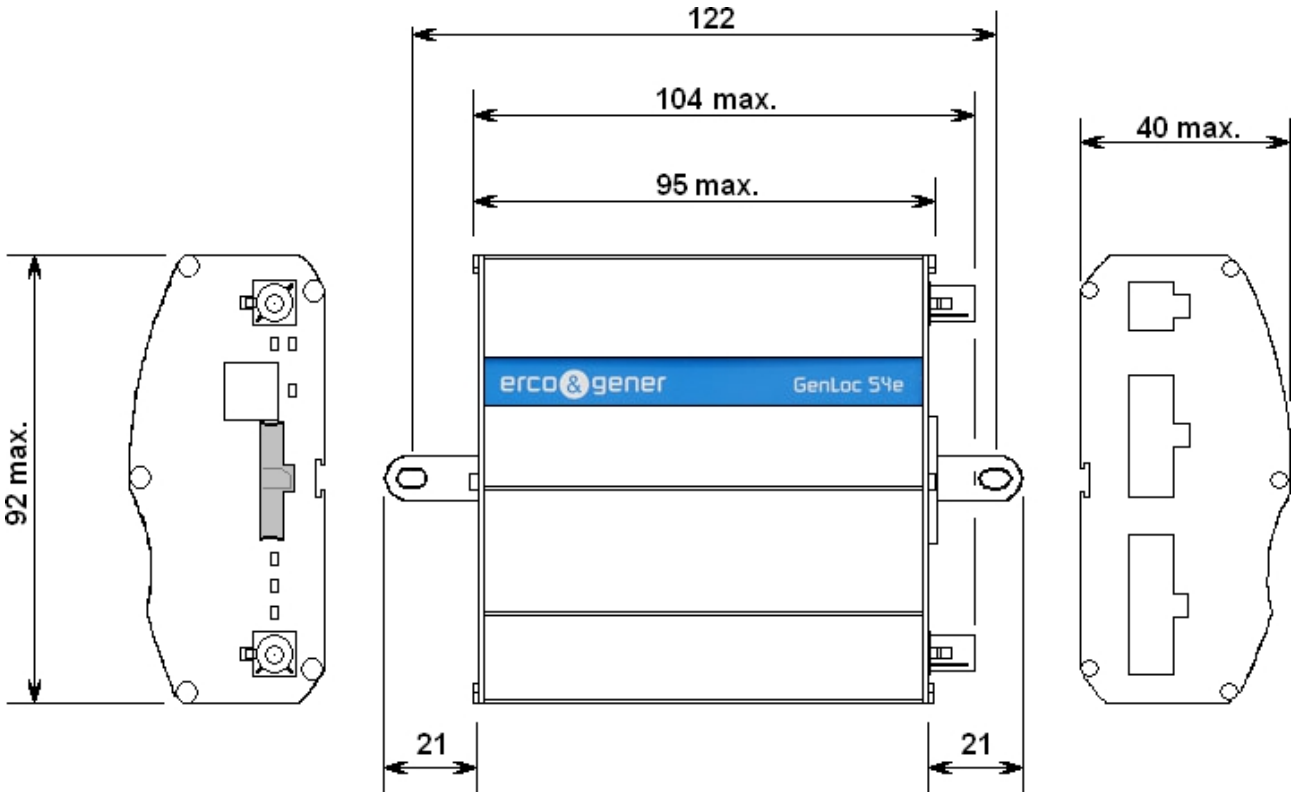

8.2 Electrical characteristics

8.2.1 Power supply

Table 38 : Electrical characteristics

Power supply range		7.2V to 32V DC
Average consumption	**Conditions**	
	Battery charged **GSM OFF** **GPS OFF**	41 mA @ 12V
	Battery in charge **GSM OFF** **GPS OFF**	149 mA @ 12V
	Battery charged **GSM ON** **GPS OFF**	- 900 MHz.....: 184 mA @ 12V in communication - 1800 MHz.....: 160 mA @ 12V in communication - Idle mode .....: mA @ 12V
	Battery charged **GSM OFF** **GPS ON** **Passive antenna**	- in searching of position .... : 63 mA @ 12V - in tracking..... : 59 mA @ 12 V

Once the power supply is connected, the modem is permanently consuming.

If the battery is present, prepare the modem for storage or transport conditions, in order to limit high discharges of the battery. For that, see § 5.10 Turning OFF the modem

The following table describes the consequences of over-voltage or insufficient voltage on the modem.

Table 39 : Effects of power supply defect

	Then:
▪ Voltage falls below 7.2V	▪ The functioning and the GSM and GPS communication are not guaranteed when the remaining capacity of the battery is not sufficient.
▪ Voltage above 32V (Punctual peaks)	▪ The modem guarantees its own protection.
▪ Voltage above 32V (Continuous over-voltage)	▪ The modem is protected by the fuse mounted on the power supply cable.

The modem does not have any internal protection. For that, you must use the power supply cable provided with the modem which has this protection.

Descriptions and non-contractual illustrations in this document are given as an indication only.
ERCO & GENER reserves the right to make any modification.

8.2.2 Consumption

8.2.2.1 Motherboard @ 25 °C

Table 40 : Motherboard consumption @ 25 °C

Motherboard	Average I Nominal				Unit.
V_{IN}	7.2	12	24	32	V
	66	41	23	18	mA

8.2.2.2 Consumption of battery charge @ 25 °C

Table 41 : Consumption of battery charge @ 25 °C

Battery charge	Average I Nominal				Unit.
V_{IN}	7.2	12	24	32	V
	179	108	56	43	mA

When the battery is completely discharged, it takes around 3 hours to obtain a new complete charge.

8.2.2.3 Consumption of GSM module @ 25 °C

Table 42 : Consumption of GSM module @ 25 °C

GSM module	Band	Mode	Average I Nominal				Unit.
V_{IN}			7.2	12	24	32	V
Low consumption	Power Off Mode		0.1	0.1	0.1	0.1	mA
	GSM/GPRS Power Saving (Idle) (1)	@ DRX = 5	0.8	0.5	0.2	0.2	mA
		@ DRX = 9	1.3	0.8	0.4	0.3	mA
Peak current			3240	1360	620	500	mA
GSM (2)	850 / 900 MHz (P = 32.2 dBm typ.)		239	143	72	55	mA
	1800 / 1900 MHz (P = 29.2 dBm typ.)		198	119	60	46	mA
GPRS(2) 2 Tx + 3 Rx slots TBF	850 MHz (P = 30.5 dBm typ.)		330	196	98	75	mA
	900 MHz (P = 30.5 dBm typ.)		280	167	84	64	mA
	1800 MHz (P = 27.5 dBm typ.)		264	157	79	61	mA
	1900 MHz (P = 27.5 dBm typ.)		272	162	82	62	mA

(1) The module is attached to network
(2) The module transmits at its maximum power.

Descriptions and non-contractual illustrations in this document are given as an indication only.
ERCO & GENER reserves the right to make any modification.

8.2.2.4 Consumption of GPS module @ 25 °C

Table 43 : Consumption of GPS module @ 25 °C

GPS module	Mode	Average I Nominal				Unit.
V_{IN}		7.2	12	24	32	V
Acquisition (during TTFF)		37	22	11	8	mA
Tracking (1)	Max Performance	31	18	9	7	mA
	Eco Mode	29	17	8	6	mA
	Power Save mode	14	8	4	3	mA
Peak current		53	31	16	12	mA

8.2.2.5 Consumption of a GPS active antenna @ 25 °C

Table 44 : Consumption of a GPS active antenna GPS @ 25 °C

Active antenna	Average I Nominal				Unit.
V_{IN}	7.2	12	24	32	V
of 10 mA	8	5	2	2	mA
of 20 mA	16	9	5	4	mA

8.2.2.6 Consumption of motherboard on battery @ 25 °C

Table 45 : Consumption of motherboard on battery @ 25 °C

Motherboard	Average I Nominal	Unit.
V_{IN}	4.2	V
	83	mA

8.2.2.7 Consumption of GSM module on battery @ 25 °C

Table 46 : Consumption of GSM module on battery @ 25 °C

GSM module	Band	Mode	Average I Nominal	Unit.
$V_{battery}$			4.2	V
Low consumption	Power Off Mode		0.09	mA
	GSM/GPRS Power	@ DRX = 5	1.6	mA
	Saving (Idle) (1)	@ DRX = 9	1	mA
Peak current			2500	mA
GSM (2)	850 / 900 MHz (P = 32.2 dBm typ.)		300	mA
	1800 / 1900 MHz (P = 29.2 dBm typ.)		250	mA
GPRS(2)	850 MHz (P = 30.5 dBm typ.)		410	mA
	900 MHz (P = 30.5 dBm typ.)		350	mA
2 Tx + 3 Rx slots TBF	1800 MHz (P = 27.5 dBm typ.)		330	mA
	1900 MHz (P = 27.5 dBm typ.)		340	mA

(1) The module is attached to network
(2) The module transmits at its maximum power.

Descriptions and non-contractual illustrations in this document are given as an indication only.
ERCO & GENER reserves the right to make any modification.

8.2.2.8 Consumption of GPS module on battery @ 25 °C

Table 47 : Consumption of GPS module on battery @ 25 °C

GPS module	Mode	Average I Nominal	Unit.
$V_{battery}$		**4.2**	**V**
Acquisition (during TTFF)		47	mA
Tracking (1)	**Max Performance**	39	mA
	Eco Mode	37	mA
	Power Save mode	17.5	mA
Peak current		67	mA

(1) Typically: 12 mn after a coldstart
15 s after a Hot start

8.2.2.9 Consumption of a GPS active antenna on battery @ 25 °C

Table 48 : Consumption of a GPS active antenna on battery @ 25 °C

Active antenna	Average I Nominal	Unit.
$V_{battery}$	**4.2**	**V**
of 10 mA	10	mA
of 20 mA	20	mA

8.2.2.10 Max consumption

The graph below indicates the maximum peak current. The power supply must be able to supply this current during the GSM and GPS "Burts".

Figure 29 : Max consumption

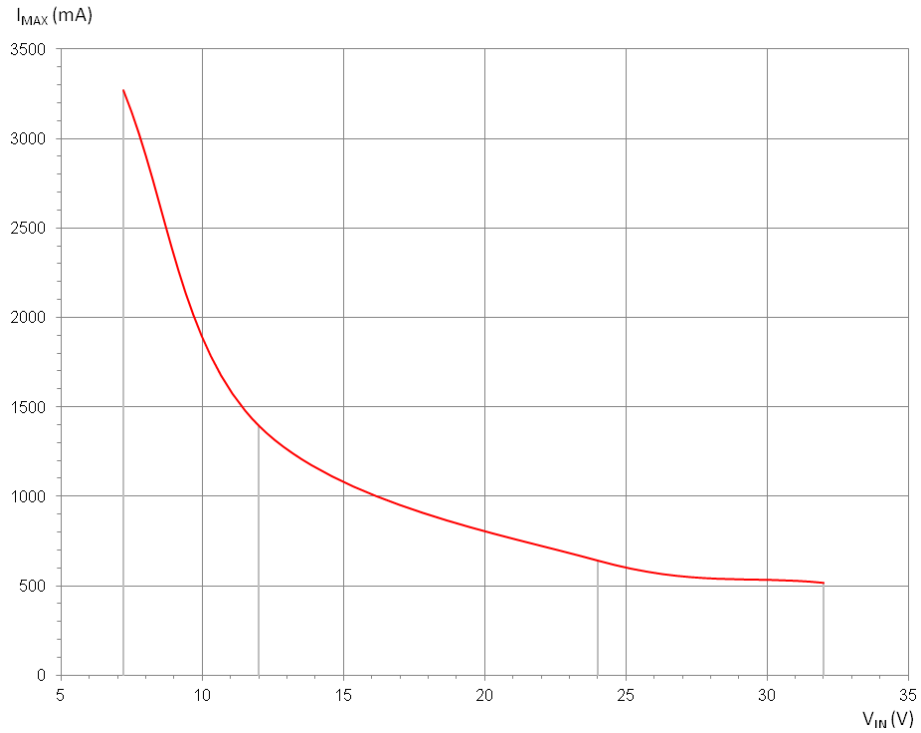

8.2.3 Audio interface

The audio interface is available via the RJ 9 4/4 connector, (see paragraph 7.9.1 Microphone Inputs, 7.9.2 Loudspeaker outputs (Speaker)) and the pin 14 of the 14-pin connector for the Buzzer (see paragraph 7.9.3 Buzzer outputs).

Main AT commands to control the audio string.

- AT+UHFP: Hand Free Parameters
- AT+UMGC: Microphone Gain Control
- AT+USGC: Speaker Gain Control
- AT+USTN: Sidetone
- AT+USPM: Audio Path mode setting
- AT+USTN: Sidetone

8.2.3.1 Microphone

The microphone input is designed for a direct connection of the electret condenser micro. (for more details, see command AT+USPM).

By default, the microphone input is active (pins MICP, MICN)

Table 49 : Polarization characteristics for a dynamic microphone

Micro Input	Parameter/Conditions	Min	Typ	Max	Units
Microphone supply open circuit voltage output	Provided by MICP with MICN.		2.2		V
Microphone supply current				2	mA
Microphone supply output resistance		2.85	3	3.15	kΩ
Microphone ground	MICN		0		V

Table 50 : Characteristics recommended for the dynamic microphone

Micro Input	Parameter/Conditions	Min	Typ	Max	Units
Maximum Input Level Range	Full scale single-ended voltage. Signal applied to MICP with MICN as reference.			1.03	V_{PP}
Input Impedance Mic(+) to Mic(-)	At 1 kHz. Impedance between MICP and MICN.		1.5		kΩ
Internal discrete high-pass -3dB cutoff frequency	Differential MIC		70		Hz

Descriptions and non-contractual illustrations in this document are given as an indication only.
ERCO & GENER reserves the right to make any modification.

Figure 30 : Micro interface

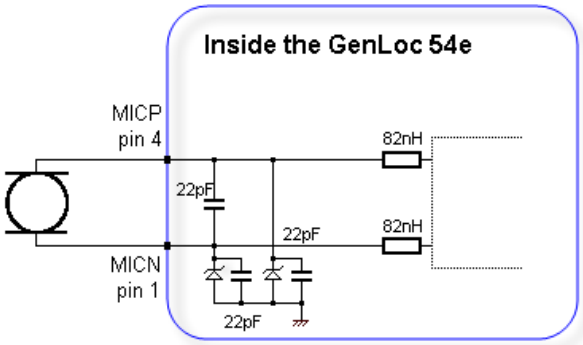

8.2.3.2 Loudspeaker

By default, the loudspeaker output is not active.
For more details, see the command AT+USPM. This output corresponds to SPK_P and SPK_N of the documentation.

Table 51 : Characteristics of Output for loudspeaker

Speaker Output	Parameter/Conditions	Min	Typ	Max	Units
Maximum differential output voltage	Overdrive Gain stage = +9 dB		7.8		V_{PP}
Common mode output voltage			1.6		V
Output load resistance			8		Ω
Single-ended output load capacitance				10	nF
Inductive load				400	µH
Signal to noise	Load = 16 Ω, Gain stage = +0 dB, Input signal = 0 dBFS, Code 0, A-weighted	70	80		dB
Signal to distortion (THD)	Load = 8 Ω, 350 mW	50			dB
Power supply rejection	1 kHz	60			dB

If not precised, the parameters are measured in the frequency band 20 Hz,...,20 kHz.

Figure 31 : Loudspeaker interface

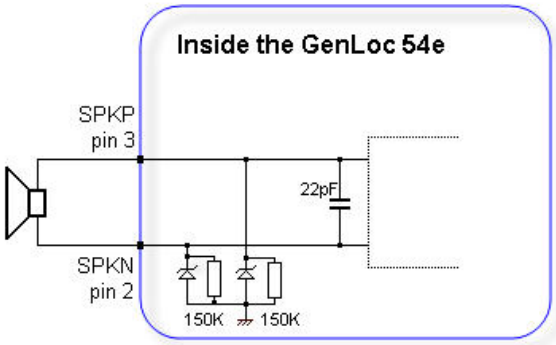

8.2.3.3 Buzzer

Table 52 : Characteristics of buzzer output

Characteristics	Symbols	Conditions	Min.	Typ.	Max.	Unit
collector-base voltage	V_{CB0}	Transmitter open			48	V_{DC}
collector-emitter voltage	V_{CE0}	Open base			40	V_{DC}
collector current (DC)	I_C				600	mA_{DC}
peak collector current	I_{CM}				800	mA_{DC}
Collector Cutoff Current	I_{CB0}	IE = 0; VCB = 60 V; Tj = 25 °C			10	nA_{DC}
		IE = 0; VCB = 60 V; Tj = 125 °C			10	μA_{DC}
collector-emitter saturation voltage	V_{CEsat}	IC = 150 mA; IB = 15 mA *			300	mV_{DC}
		IC = 500 mA; IB = 50 mA *			1	V_{DC}
transition frequency	f_T	IC = 20 mA; VCE = 20 V; f = 100 MHz			300	MHz
collector capacitance	C_C	$I_E = I_e = 0$; VCB = 10 V; f = 1 MHz			8	pF
total power dissipation	P_{Ttot}	$T_{amb} \leq 25$ °C			225	mW

* Pulse test: tp ≤ 300 µs; δ ≤ 0.02.

Table 53 : Example of transducer tested with the GenLoc 54e

Buzzer characteristics	Values
Type	Transducer AT-2720-T-R
Consumptions	1-30V peak/3.5mA max.
Resonance frequency	2.048Hz ±500HZ
Sound pressure level (SPL)	Min.88dBA @10cm

Figure 32 : Example of transducer tested with the GenLoc 54e

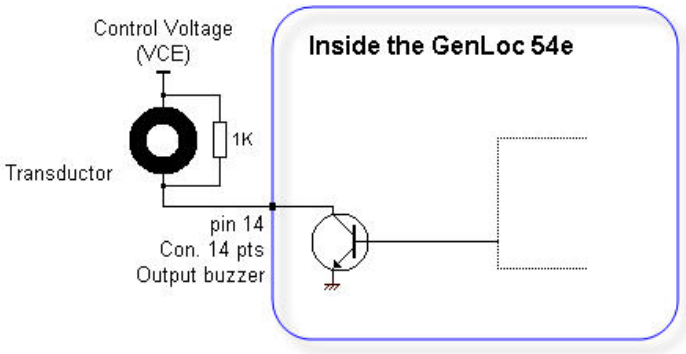

8.2.4 Inputs/Output

By default, the GenLoc 54e provides:

- 3 opto-coupled inputs (E1, E2 and E4)
- 2 opto-coupled inputs insulated (E3 and E5)
- 3 open collector outputs (S1 up to S3).
- 2 analog inputs (ANA1, ANA2).

8.2.4.1 Opto-coupled inputs

Table 54 : Characteristics of opto-coupled inputs

Characteristics	Symbols	Conditions	Min.	Typ.	Max.	Unit
Max.current	$I_{F\ (rms)}$				50	mA
Max.inverted voltage	V_R				5	V
Direct voltage	V_F	I_F = 10 mA	1.0	1.15	1.3	V
Inverted current	I_R	V_R = 5 V			10	µA
Capacity	C_T	V=0, f = 1 MHz	---	30	---	pF
Transfer Ratio	I_C / I_F	I_F = 5 mA, V_{CE} = 5 V	50	---	600	%
Saturation of transfer ratio	I_C / $I_{F\ (SAT)}$	I_F = 1 mA, V_{CE} = 0.4 V		60		%
Command voltage			3,5		35	V
Idle voltage					1	V

Figure 33 : Internal electric scheme of the inputs

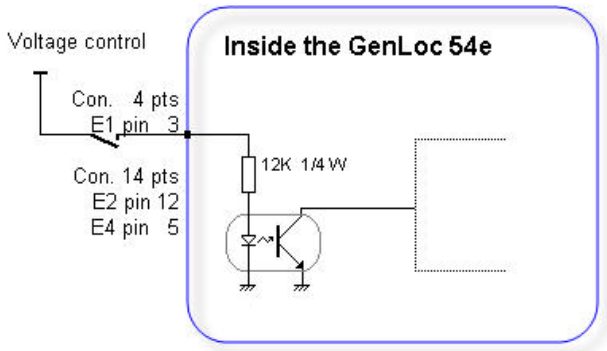

The minimum command voltage for the detection is: **3.5 V**

The maximum command voltage is: **35 V**

8.2.4.2 Opto-coupled inputs insulated

The Inputs E3 and E5 are insulated.

The electrical characteristics are the same as the ones in paragraph 8.2.4.1 Opto-coupled inputs .

Figure 34 : Internal electrical scheme of insulated inputs

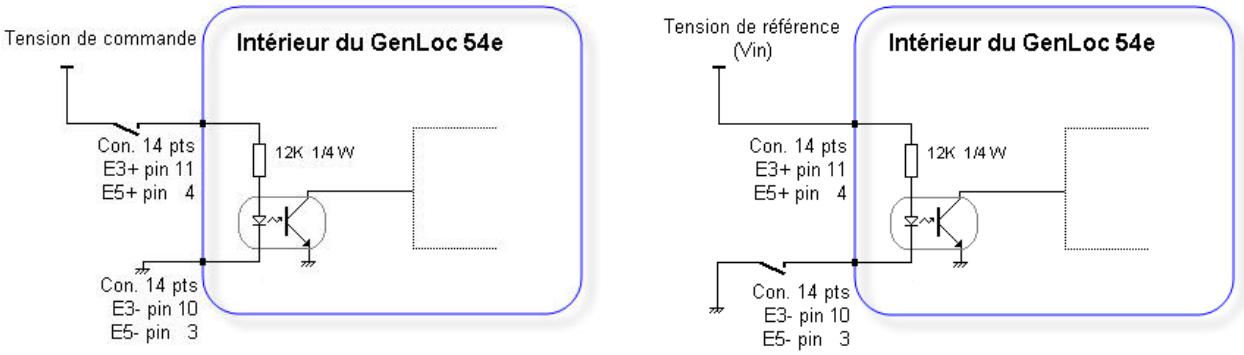

Control via the PLUS

Control by putting to the Ground

Table 55 : Pin out of insulated inputs

Input	E+	E-
	pins	pins
E3 insulated	11	10
E5 insulated	4	3

8.2.4.3 Outputs

Table 56 : Characteristics of open-collector output

Characteristics	Symbols	Conditions	Min.	Typ.	Max.	Unit
Max. voltage	V_{CE0}	Open transmitter			48	V_{DC}
Max. voltage	V_{CES}	V_{BE} = 0 V			48	V_{DC}
Collector current	I_C				0.5	A_{DC}
Saturation voltage	V_{CEsat}	I_C = 500 mA			1.3	V_{DC}
Dissipation	P_{Ttot}	$T_{amb} \leq 25$ °C, T_j = 110 °C			0.78	W

Figure 35 : Internal electric scheme of the output

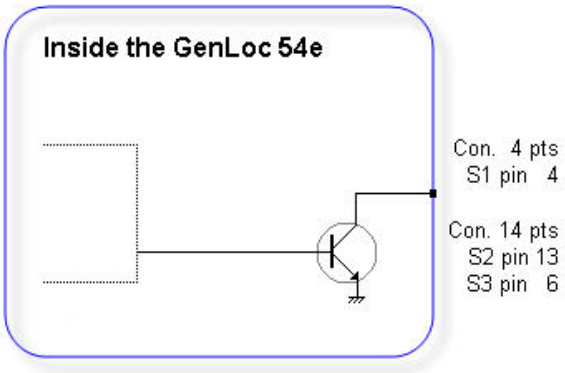

No protection is provided. The user must respect the values of the table above.

Figure 36 : Example of relay control

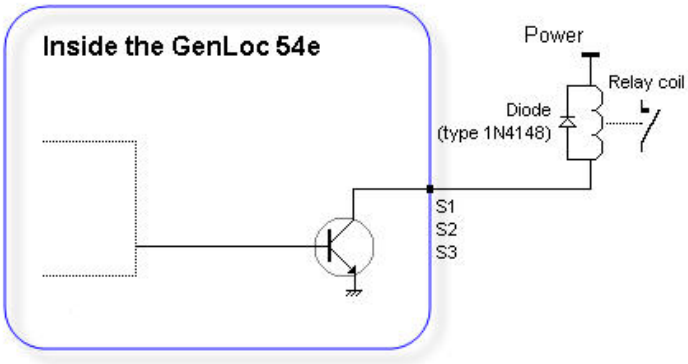

8.2.4.4 Analog inputs

Table 57 : Characteristics of analog inputs

Characteristics	Symbols	Conditions	Min.	Typ.	Max.	Unit
Analog input	ANA1 / 2		-0.3		128	V_{DC}
Conversion range			1.3 µ		10.33	V_{DC}
Polarization current		From 1.3 µV to 10.33 V	0.064		345	$µA_{DC}$
Resolution				10		bits

The integrator has the responsibility to protect the input from electrical perturbations and to respect the functioning parameters values.

Figure 37 : Internal electrical scheme of analog input

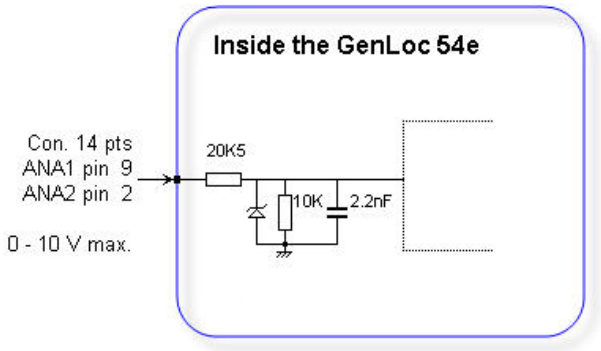

8.2.5 SIM interface

Table 58 : Characteristics of SIM card supply voltage

SIM card	3 V or 1.8 V

8.2.6 Option 2nd SIM interface

Contact us.

8.2.7 RESET signal

Table 59 : Conditions of use of RESET signal

Parameters	Conditions	Min.	Typ.	Max.	Unit
V_{IL}	Input Voltage – Low	-0.3		0.8	V_{DC}
V_{IH}	Input Voltage – High	2		3.3	V_{DC}
RIPU	Internal Pull-Up Resistor		5.38K		Ω

Figure 38 : Wiring scheme of RESET signal

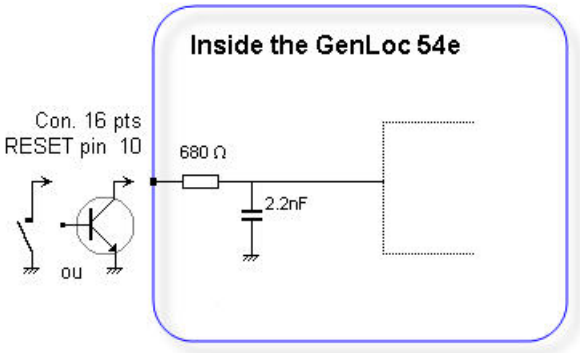

The use of the RESET signal must pass through a transistor assembly or a logic contact.

8.2.8 One Wire Bus

It is possible to have an Input Bus One Wire.

The management of the bus is done by the ARM.

Table 60 : One Wire Bus – Electrical characteristics of the ARM

Characteristics	Symbols	Conditions	Min.	Typ.	Max.	Unit
Input Voltage – Low	V_{IL}		-0.3		0.8	V_{DC}
Input Voltage – High	V_{IH}		2		3.5	V_{DC}
Hysteresis Voltage	V_{Hys}		0.4		0.7	V_{DC}
Input Leakage Current	I_{LEAK}		-4		38	μA_{DC}
Input capacitance	C_{IN}				14	pF
Output Low-level Voltage	V_{OL}				0.4	V_{DC}
Output High-level Voltage	V_{OH}		2.8			V_{DC}
Output Current	I_o				±16	mA_{DC}

Figure 39 : Internal electrical scheme of the One Wire bus

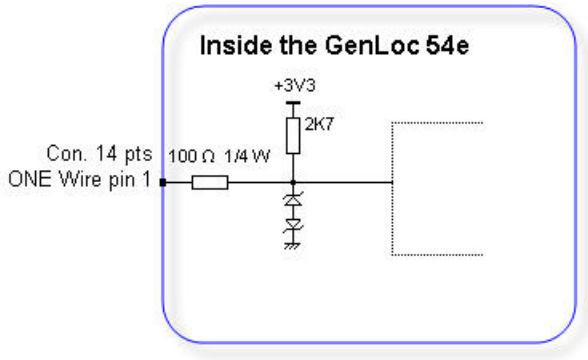

This Input is directly connected on the ARM. Port PA0.
The selection of direction (Input/Output) is done via software.

Assembly working with identification keys DS1990 i-button from the manufacturer MAXIM.

The integrator has the responsibility to protect the input from electrical perturbations and to respect the functioning parameters values

8.2.9 K_Line compatible input (ISO 91141-2)

The GenLoc 54e is designed to be connected to a chrono-tachograph. (Connector D8 of the chrono-tachograph).
This signal is managed by the embedded ARM application.

Figure 40 : Scheme of connection of the K_Line input on a Chrono- tachograph

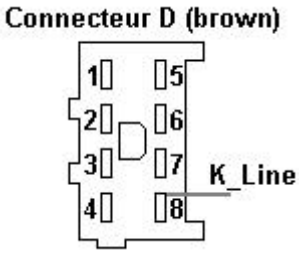

The supply voltage of the GenLoc 54e must be below $12V_{DC.}$
For superior voltages, contact us.
There is currently no software application to use this signal.

Table 61 : K_Line bus

Characteristics	Symbols	Conditions	Min.	Typ.	Max.	Unit
Input Voltage – Low	V_{IL}				3.1	V_{DC}
Input Voltage – High	V_{IH}		7.7		12	V_{DC}
Input Leakage Current	I_{LEAK}	@ V_{DC} = 12V	-1.8		22.1	mA_{DC}

Figure 41 : Internal electrical scheme of the K_Line bus

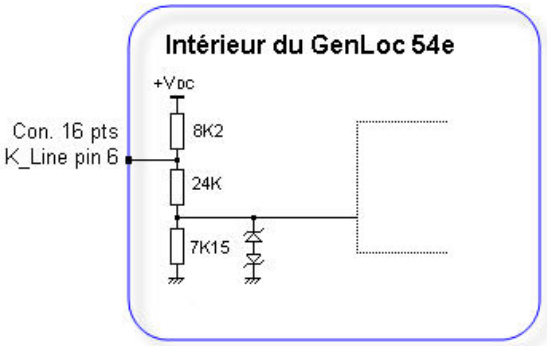

Figure 42 : Level of K_Line bus

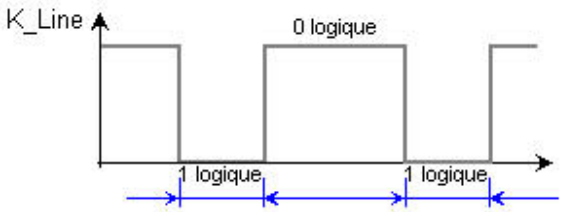

The integrator has the responsibility to protect the input from electrical perturbations and to respect the functioning parameters values.

8.2.10 Characteristics of the RS232 serial links

The characteristics are the same for the 2 serial links RS_232_0 and RS232_1

Table 62 : Characteristics of the UART

Characteristics	Symbols	Conditions	Min.	Typ.	Max.	Unit
Input Voltage – Range	V_{INPUT}	Input Voltage – Range	-25		+25	V_{DC}
Input Voltage – Low	V_{IL}	Input Voltage – Low	0.6	1.1		V_{DC}
Input Voltage – High	V_{IH}	Input Voltage – High		1.5	24	V_{DC}
Input Hysteresis	V_{Hys}	Input Hysteresis		0.5		V_{DC}
Input Resistance	R_{in}	Input Resistance	3	5	7	KΩ
Output Voltage	V_{OUT}	All transmitter outputs loaded with 3 kΩ to ground	±5	±5.4		V_{DC}
Transmitter Output Resistance	R_{OUT}		300	50k		Ω
RS-232 Output Short-Circuit Current	I_{CC}				±60	mA

8.2.11 RF GSM/DCS characteristics

The RF functioning complies with the ETSI GSM Standard recommendation.

The RF performances for the receiver and the transmitter are described below.

Table 63 : Parameters of the RF receiver and transmitter

Receiver	
Sensitivity in 850/900	- 110 dBm, GPRS Coding Scheme 1 (CS1)
Sensitivity in 1800/1900	- 109 dBm, GPRS Coding Scheme 1 (CS1)
Transmitter	
Maximum power (Power Class1 - 850/900) at room temperature	33 dBm +/- 2 dB @ antenna connection
Maximum power (Power Class4 - 1800/1900) at room temperature	30 dBm +/- 2 dB @ antenna connection

Descriptions and non-contractual illustrations in this document are given as an indication only.
ERCO & GENER reserves the right to make any modification.

8.2.11.1 GSM external antenna

The GSM external antenna is connected to the modem via the FAKRA-D connector.

The external antenna must have the characteristics described in the table below.

Table 64 : Characteristics of the GSM external antenna

Frequency band		
GSM 900	880..960 MHz	
GSM 1800	1710..1880 MHz	
GSM 850	824..894 MHz	
GSM 1900	1850..1990 MHz	
Impedance	50 Ohms nominal	
Input power	> 2 W peak	
Gain	< 3 dBi	
VSWR	< 2:1 recommended	< 3:1 acceptable
Return Loss	S_{11}<-10 dB recommended	S_{11}<-6 dB acceptable

See § 10 Recommended accessories , for the GSM antennas recommended by ERCO & GENER.

8.2.12 GPS characteristics

8.2.12.1 GPS functioning

The manufacturer GPS performances are given in the table below.

Table 65 : GPS parameters

Parameters	**Specifications**	
Kind of reception	Frequency L1 C/A Code – 50 channels	
Time To First Fix [1]	Cold Start (Autonomous)	27 s
	Warm Start (Autonomous)	27 s
	Hot Start (Autonomous)	< 1s
	Aided Starts[2]	< 3 s
Sensibility [3]	Tracking & Navigation	-161 dBm
	Reacquisition	-160 dBm
	Cold Start (Autonomous)	-147 dBm
Horizontal Position Accuracy [4]	Autonomous	< 2.5 m
	SBAS	< 2.0 m
Max Navigation Update Rate	5 Hz	
Velocity Accuracy [5]	0.1 m/s	
Heading Accuracy [5]	0.5 degrees	
Dynamics	≤ 4 g	
Operational Limits Velocity	500 m/s	

[1] All satellites at -130 dB
[2] Dependent on aiding data connection speed and latency
[3] Demonstrated with a good active antenna
[4] Under good GPS signal conditions
[5] Assuming Airborne <4g platform

Descriptions and non-contractual illustrations in this document are given as an indication only.
ERCO & GENER reserves the right to make any modification.

8.2.12.2 GPS external antenna

The GPS external antenna is connected to the modem via the FAKRA-C connector.

The external antenna must have the characteristics described in the table below.

Table 66 : Characteristics of the GPS external antenna

Rx frequency	1575.42 MHz +/-1.023 MHz
Impedance	50 Ohms nominal
Antenna gain	15 dB typ / 50 dB max
Maximum noise figure	1.5 dB
Supply voltage	3.2V
Supply current (max)	50mA

See § 10 Recommended accessories , for the GSM antennas recommended by ERCO & GENER.

8.2.12.3 Installation of the GPS external antenna

The quality of the GPS signal received depends on the quality of installation of the antenna. To obtain an optimal signal, some rules have to be respected:

- Place the antenna horizontally, dome towards the top and preferably outside the vehicle,
- Do not place the antenna under athermic windscreens,
- Do not place the antenna under metallic surfaces

Figure 43 : Recommended installation of GPS antenna

Figure 44 : Installation of GPS antenna not recommended

This installation does not prevent the functioning of the GPS but highly reduces its performances.

8.2.13 Characteristics of the accelerometer

Table 67 : Characteristics of the accelerometer

Dynamic	± 2g or ± 8g controlled by software
Interface (internal)	SPI with the ARM
Multiple Interruption	programmable
Up-going filter	programmable

8.2.14 Power supply 3.8 V

Table 68 : Conditions of use of the output power supply 3.8 V

Parameters	Condition	Min.	Typ.	Max.	Unit
V_{OUT}	Without power supply *	2.8		4.2	V_{DC}
	With power supply 7.2V - 32V	4.4		4.5	V_{DC}
I_{OUT}	Max.			100	mA_{DC}

* Le GenLoc 54e works only with the battery.

The min. 2.8 V is the auto-protection limit of the battery. From this moment, the battery puts itself under protection, and the Output voltage becomes null.

8.2.15 Power supply Power_Out

The modem contains the EGM standard library (see the documents "EG_EGM_CL_xxx_yy" of ERCO & GENER); in this case, the command ***AT+GPIOEXTSET=54,n*** allows the control of the power supply Power_Out.

AT+GPIOGET=54,<index>

<Index>

0 Cuts the power supply Power_Out

1 Launches the power supply Power_Out

For more information about this command, see the document EG_EGM_CL_xxx_yy of ERCO & GENER.

Figure 45 : Internal electrical scheme of the Power_Out

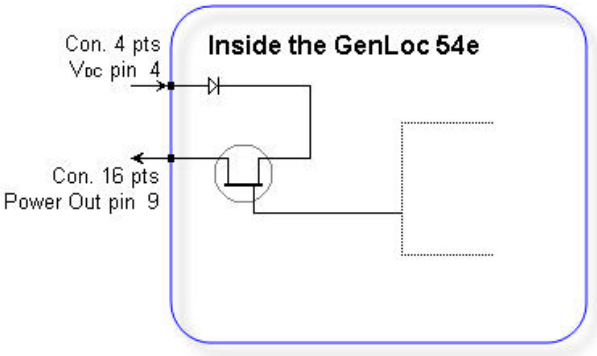

The maximum current is: **1 A**

Below the graph of voltage drop due to the serial diode and the transistor.

Figure 46 : Drop of voltage

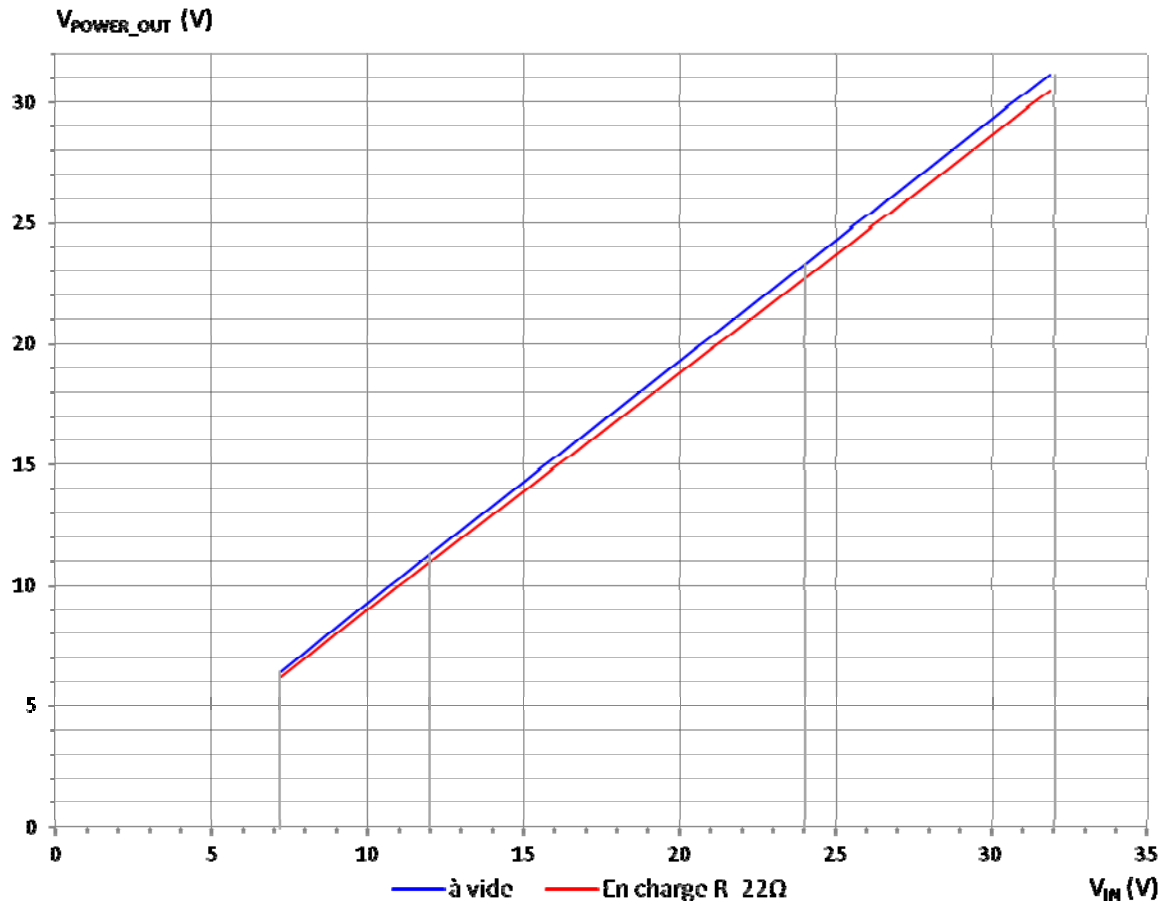

8.2.16 Option power supply 100V

Contact us.

8.3 Environmental characteristics

To ensure a correct functioning of the modem, the limits listed in the table below must be respected.

Table 69 : Environmental characteristics

Operating temperature range	
Battery charging	0 °C to +45 °C
Battery discharging	-20 °C to +45 °C
Storage temperature range	1 year of storage between -20°C to + 35°C 3 months of storage between -20°C to + 45°C 1 month of storage between -20°C à + 60°C
Relative humidity	65 ±20%

Above 45 °C inside the box, the protection of the battery management triggers. The battery will not be charged.

8.4 Standards/Conformities

The product complies with the essential requirements:

- R&TTE 1999/5/EC Directive,
- Regulations of standard ETSI EN 301 489-7 (02),
- ROHS Compliant : Directive 2002/95/CE,
- 2002/96/CE DEEE (crossed out wheelie bin).

The following marking appears under the device.

CE

Descriptions and non-contractual illustrations in this document are given as an indication only.
ERCO & GENER reserves the right to make any modification.

9 Security recommendations

9.1 General security

It is important to respect the specific regulations linked with the use of radio equipment, in particular with the possible risks of interference due to radio frequency (RF). Please respect carefully the following security advices.

Turn OFF your GSM modem:

- On an aircraft, the use of cellular telephone can endanger the plane operations; disturbing the cellular network is illegal. The non-observance of this instruction can lead to the suspension or the exclusion of the cellular phone services, or even to a trial, or both,
- At a refueling station,
- In any area with a potential explosive atmosphere that could cause an explosion or a fire,
- In hospitals and other places where medical equipment may be used.

Restrictions of use of radio equipments in:

- Fuel warehouses,
- Chemical factories,
- Places where destruction operations are in the running,
- Other places where signs indicate that the use of cellular phones is prohibited or dangerous.
- Other places where you should normally turn OFF the engine of your vehicle.

There can be a danger associated with the use of your GSM modem close to insufficiently protected medical equipments such as audio devices and pacemakers.

Consult the manufacturers of medical equipment to know if it is adequately protected.

Using your GSM modem close to other electronic equipments may also cause interferences if the equipment is insufficiently protected.

Pay attention to the warnings and the recommendations of the manufacturers.

The modem is designed to be used with "fixed" and "mobile" applications:

- “Fixed" application: The GSM modem is physically linked to a site and it is not possible to move it easily to another site.
- "Mobile" application: The GSM modem is designed to be used in various places (other than fixed) and is intended to be used in portable applications.
- The modem must be used at more than 20cm from the human body.

This equipment is supplied in Very Low Security Voltage and at non-dangerous energy level.

Descriptions and non-contractual illustrations in this document are given as an indication only.
ERCO & GENER reserves the right to make any modification.

9.2 Security in a vehicle

Do not use your Modem whilst driving, unless equipped with a correctly installed ear-piece/hands-free kit.

Respect the national regulations linked with the use of cellular telephones in vehicles. Road safety is always a priority.

An incorrect installation of the GSM modem in a vehicle could cause an incorrect functioning of the vehicle's electronics. To avoid such problems, make sure that the installation was made by a qualified person. During the installation, a verification of the electronic protection system of the vehicle must be done.

The use of a warning equipment that activates the headlights or the horn of a vehicle on public highway is not authorized.

9.3 Care and maintenance

The following suggestions will help you to preserve this product for many years.

Do not expose the modem to the extreme environments, to high temperature or high humidity.

Do not use or store the modem in dusty or dirty places, it could be damaged.

Do not try to disassemble the modem, at the risk of cancelation of the guarantee.

Do not expose the modem to water, rain or spilled beverage, it is not impermeable.

Avoid dropping, striking, or shaking the modem violently. The lack of care can damage it.

Do not place the modem next to computer disks, credit or travel cards or other magnetic supports. The information contained on disks or cards can be affected by the modem.

The use of other equipments or accessories not made or not authorized by ERCO & GENER can cancel the guarantee of the modem.

The battery is not under guarantee.

9.4 Your responsibility

This modem is under your responsibility. Treat it with care, it is not a toy. Keep it always in a secure place and out of the reach of children.

Try to remember your PIN and PUK codes. Familiarize yourself with the modem and use the security functions to lock it in case of non-authorized using or in case of theft.

Descriptions and non-contractual illustrations in this document are given as an indication only.
ERCO & GENER reserves the right to make any modification.

10 Recommended accessories

The accessories recommended by ERCO & GENER for the modem GenLoc 54e are described on our website in the section Products/Accessories. For more information, contact our sales department.

11 Client support

ERCO & GENER ensures the client support for all its modems sold. You will then have access to:

- The latest version of this document
- The datasheet of the product
- The latest versions of the OS user guides
- Certificates
- Application notes

The support for the EGM developments is proposed as an option (contact us).

Descriptions and non-contractual illustrations in this document are given as an indication only.
ERCO & GENER reserves the right to make any modification.

DECLARATION OF CONFORMITY

Manufacturer : **ERCO & GENER**

Address : Rue des Petites Granges
Z.I de Saint Lambert des Levées
B.P. 30163
49412 SAUMUR CEDEX – France

Website : http://www.ercogener.com

declares that the product :

Name : GenLoc 54e Type : Modem

Complies with :

- R&TTE 1999/5/EC Directive,
- EN301489-1:V1.8.1
- EN301489-7:V1.3.1
- Compliant with the requirements of the ECE R10 rev4
- EN 301 511 v9.0.2
- EN 60950-1:2006 + A11:2009
- ROHS Compliant : Directive 2002/95/CE.
- REACH N°1907/2006

CE

The corresponding markings appear under the appliance.

Saumur, January 22nd 2013

Charles CHAUSSONNIER
Managing Director