FM5300 User Manual
V3.59

Table of contents

1 INTRODUCTION 6

1.1 ATTENTION 6
1.2 INSTRUCTIONS OF SAFETY 7
1.3 LEGAL NOTICE 7
1.4 ABOUT DOCUMENT 7

2 BASIC DESCRIPTION 8

2.1 PACKAGE CONTENTS 8
2.2 BASIC CHARACTERISTICS 8
2.3 TECHNICAL INFORMATION ABOUT INTERNAL BATTERY! 11
2.4 FM5300 HARDWARE MODIFICATION FOR EXTERNAL BACKUP BATTERY. 11
2.5 ELECTRICAL CHARACTERISTICS 12
2.6 ABSOLUTE MAXIMUM RATINGS 14

3 CONNECTION AND PINOUT 14

3.1 SIM CARD INSERT SCHEME 14
3.2 INSTALLING FM5300 DRIVERS 16
3.3 NAVIGATE LED 17
3.4 STATUS LED 17
3.5 SOCKET 2×10 PINOUT 18
3.6 USB 19
3.7 ACCESSORIES 19

4 FIRMWARE 24

4.1 UPDATING FIRMWARE USING USB CABLE 24

5 OPERATIONAL BASICS 26

5.1 OPERATIONAL PRINCIPLES 26
5.2 OPERATIONAL MODES 26
5.3 ACCELEROMETER 26
5.4 VIRTUAL ODOMETER 27
5.5 VOICE FUNCTIONALITY 27
5.6 PROFILES 28
5.7 FEATURES 28
Scenarios 28
Trip 29
Geofencing 29
iButton list 29

6 CONFIGURATOR 29

6.1 STARTUP 29
6.2 CONFIGURATOR STRUCTURE 30
Buttons area 31
Information area 32
Profiles/global parameters selection area 32
6.3 PARAMETERS CONFIGURATION 33
Global parameters Settings 33
Settings and configurable parameters menu 35
6.3.1.1 System Settings 35
6.3.1.2 GSM Settings 36
6.3.1.2.1 GPRS 36
6.3.1.2.2 Data limits functionality 37
6.3.1.2.3 SMS 37
6.3.1.2.4 Operator List 39
6.3.1.3 Features 40
6.3.1.3.1 Mode 40
6.3.1.3.2 Scenarios 41

6.3.1.3.3 Trip ... 41
6.3.1.3.4 Geofencing ... 42
6.3.1.3.4.1 Geofencing settings ... 42
6.3.1.3.4.2 AutoGeofencing settings ... 43
6.3.1.3.5 iButton List ... 45
6.3.1.4 I/O ... 45
6.3.1.4.1 FM5300 available I/O list ... 45
6.3.1.4.2 I/O configuring ... 48
6.3.1.4.3 I/O properties ... 49
6.3.1.5 CAN ... 52
6.3.1.5.1 CAN interface parameters ... 52
6.3.1.6 Configurable parameter values and Global parameter values ... 53
6.3.1.6.1 Configurable parameters ... 53
6.3.1.6.2 Global parameters ... 57
6.3.1.7 Read Records* (* new functionality available with FM5300M version) ... 58

7 PROFILE SWITCHING ... 60

7.1 PROFILE SWITCHING DEPENDENCE ON GSM OPERATOR ... 60
7.2 PROFILE SWITCHING DEPENDENCE ON I/O EVENT ... 63
Example #1 ... 63
Example #2 ... 63

8 DATA ACQUISITION ... 64

8.1 GPS DATA ACQUISITION ... 64
Min. Period ... 65
Min. Distance ... 65
Min. Angle ... 65
8.2 I/O DATA ACQUISITION ... 66
Configuration ... 66
Event generation ... 66

9 SLEEP/DEEP SLEEP MODES ... 67

SLEEP MODE ... 67

DEEP SLEEP MODE ... 68

10 FEATURES AND SCENARIOS ... 69

10.1 ECO DRIVING/GREEN DRIVING SCENARIOS ... 69
Mounting Requirements ... 70
Configuration ... 72
Data output ... 72
10.2 OVERSPEEDING SCENARIO ... 73
Mounting Requirements and Working Conditions ... 73
Configuration ... 73
10.3 IMMOBILIZER SCENARIO ... 74
Configuration ... 74
10.4 AUTHORIZED DRIVING SCENARIO ... 74
Configuration ... 74
10.5 COM1 AND COM2 WORKING MODES ... 74
Silent Mode ... 74
FM Log Mode ... 75
LLS Mode ... 75
10.5.1.1 LLS Mode Configuration ... 75
10.5.1.2 LLS Polynoms Configuration ... 75
LCD Mode Configuration ... 76
RFID HID Mode Configuration ... 76
RFID MF7 Mode Configuration ... 76
Garmin Mode Configuration ... 77
10.5.1.3 Settings ... 77
10.5.1.4 Firmware Configuration ... 78

COM TCP Link Mode *78*
TCP Link Mode (Binary) *79*
NMEA Log Mode *79*

11 SMS COMMAND LIST 80

11.1 GETSTATUS 81
11.2 GETWEEKTIME 82
11.3 GETOPS 82
11.4 READOPS # 82
11.5 GETNMEAINFO 82
11.6 GETCFGTIME 83
11.7 GETGPS 83
11.8 LOADPROFILE# 83
11.9 CPURESET 83
11.10 RESETALLPROF 83
11.11 GETVER 83
11.12 GETIO 84
11.13 GETINFO 84
11.14 DELETERECORDS 85
11.15 READIO # 85
11.16 SETDIGOUT #### X Y Z W 85
11.17 GETPARAM #### 85
11.18 SETPARAM #### # 86
11.19 FLUSH #,#,#,#,#,#,# 86
11.20 GETGNSS 86
11.21 SN X 87
11.22 BANLIST 87
11.23 CRASHLOG 87
11.24 BRAMINFO 87
11.25 ODINFO 88
11.26 GETCONTSENS 88
11.27 SAVECONTSENS 88

12 CAN 89

12.1 GENERAL DESCRIPTION 89
12.2 CONFIGURATION 90
12.3 EXAMPLE 91
12.4 AUTOCAN DESCRIPTION 94
Configuration *95*
CAN monitoring *96*
Offline configuration *97*
AutoCAN ID list *97*
12.5 AUTOCAN CONFIGURATION OVER SMS 112
SMS command format: *112*
Parameter ID explanation: *112*
AutoCAN element Ids *112*
AutoCAN element parameters *113*
Example of AutoCAN parameter configuration over SMS: *113*
Parameter value reading *114*

RFID 114

13 GARMIN 115

13.1 SUPPORTED GARMIN FMI PROTOCOLS 116
Standard protocols *116*
Enhanced protocols *117*
13.2 SUPPORTED FEATURES ON TAVL CLIENT APPLICATION 117
13.3 TEXT MESSAGING 117

13.4 DESTINATION MESSAGE 118
13.5 ETA REQUEST MESSAGE 118
13.6 CONNECTION AND PINOUT 118

14 LLS SENSOR 119

14.1 SPECIFICATIONS 120
14.2 HARDWARE 120
14.3 CONNECTING LLS TO FM5300 120

15 GPRS COMMANDS 127

16 DEBUG MODE 130

17 FM5300 REMOTE LOG 130

18 MOUNTING RECOMMENDATIONS 135

18.1 CONNECTING WIRES 135
18.2 CONNECTING POWER SOURCE 135
18.3 CONNECTING IGNITION WIRE 135
18.4 CONNECTING GROUND WIRE 136
18.5 CONNECTING ANTENNAS 136
18.6 MODULE INSTALLATION 137

19 CHANGE LOG 138

1 INTRODUCTION

1.1 Attention

Do not disassemble the device. If the device is damaged, the power supply cables are not isolated or the isolation is damaged, before unplugging the power supply, do not touch the device.

All wireless data transferring devices produce interference that may affect other devices which are placed nearby.

The device must be connected only by qualified personnel.

The device must be firmly fastened in the predefined location.

The programming must be performed using a second class PC (with autonomic power supply).

The device is susceptible to water and humidity.

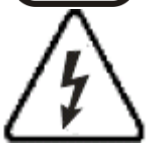

Any installation and/or handling during a lightning storm are prohibited.

FM5300 has USB interface;
Please use cables provided with FM5300 device.
Teltonika is not responsible for any harm caused by using wrong cables for PC <-> FM5300 connection.

This sign on the packaging means that the electric and electronic equipment to be utilized must be stored separately.

1.2 Instructions of safety

This chapter contains information on how to operate FM5300 safely. By following these requirements and recommendations, you will avoid dangerous situations. You must read these instructions carefully and follow them strictly before operating the device!

To avoid mechanical damage, it is advised to transport the FM5300 device in an impact-proof package. Before usage, the device should be placed so that its LED indicators are visible, which show the status of operation the device is in.

When connecting the connection (2x10) cables to the vehicle, the appropriate jumpers of the power supply of the vehicle should be disconnected.

Before dismounting the device from the vehicle, the 2x10 connection must be disconnected.

The device is designed to be mounted in a zone of limited access, which is inaccessible for the operator. All related devices must meet the requirements of standard EN 60950-1.

The device FM5300 is not designed as a navigational device for boats.

1.3 Legal Notice

Copyright © 2012 Teltonika. All rights reserved. Reproduction, transfer, distribution or storage of part or all of the contents in this document in any form without the prior written permission of Teltonika is prohibited.

Garmin and the Garmin logo are registered trademarks, all rights reserved.

Other products and company names mentioned here may be trademarks or trade names of their respective owners.

1.4 About document

This document contains information about the architecture, possibilities, mechanical characteristics, and configuration of the FM5300 device.

Acronyms and terms used in document:

PC – Personal Computer

GPRS – General Packet Radio Service

GPS – Global Positioning System

GSM – Global System for Mobile Communications

SMS – Short Message Service

AC/DC – Alternating Current/Direct Current

I/O – Input/Output.

Record – AVL data stored in FM5300 memory. AVL data contains GPS and I/O information

AVL packet - Data packet that is being sent to server during data transmission. AVL packet contains from 1 to 50 records.

Geofence – a virtual geographic area of interest that can be defined by a radius or polygon for the location. In this document term “Geofence” is often used as functionality, which generates an event when crossing a defined area.

2 BASIC DESCRIPTION

FM5300 is a terminal with GPS and GSM connectivity, which is able to determine the object's coordinates and transfer them via the GSM network. This device is perfectly suitable for applications, which need location acquirement of remote objects. It is important to mention that FM5300 has additional inputs and outputs, which let you control and monitor other devices on remote objects. FM5300 also has a USB port for device status log output and entering configurations.

2.1 Package contents[1]

Usually the FM5300 device sample is supplied to the customer in a cardboard box containing all the equipment that is necessary for operation. The package contains:

FM5300 device
Input and output power supply cable with 2x10 connection pins
4 screws for assembling device
GPS/GLONASS antenna
GSM antenna
USB cable
Port 1/2 cable
Port 3 cable
Card with link to drivers and configurator

2.2 Basic characteristics

GSM/GPRS features:

- Teltonika TM11Q quad band module (GSM 850 / 900 / 1800 / 1900 MHz);
- GPRS class 10;
- SMS (text, data).

GPS features:

- Fastrax IT600 32 channel GPS/GLONASS receiver;
- Protocol NMEA-0183: GGA, GGL, GSA, GSV, RMC, VTG;
- Up to -160 dBm sensitivity.

GLONASS features:

- NV08C-CSM 32 tracking channels;
- Protocol NMEA-0183: GGA, GGL, GSA, GSV, RMC, VTG;
- GPS/GALILEO/SBAS: L1 1575.42 MHz;
- GLONASS: L1 1597.5-1609.5 MHz;
- Up to -160 dBm sensitivity.

[1] Package content depends on Order Code, and can be customized by customer needs.

GNSS GGG303 Module features:

- Navigation Systems; GPS/GLONASS/GALILEO/QZSS;
- Protocol NMEA-0183: GGA, GGL, GSA, GSV, RMC, VTG;
- Up to -162 dBm sensitivity.

Hardware features:

- Cortex®-M3 processor;
- 16 MB internal Flash memory;
- Built-in accelerometer.
- Internal backup battery included

Interface features:

- Power supply: 10 ÷ 30V;
- USB port;
- 4 digital inputs;
- 4 analog inputs;
- 4 open collector digital outputs;
- 1Wire® temperature sensor;
- 1Wire® iButton;
- LEDs indicating device status;
- 2xRS232 ports;
- Audio interface;
- CAN messages 2.0 A, B Active support. Speed up to 1 Mbit/s.

Optional features (enable with FM5300M):

- The memory can save 47,615 records;
- Roaming enabling/disabling;
- Offline working mode;
- Records importing using USB;
- Remote logs reading via SMS/GPRS

Overvoltage protection (new devices with order code FM5300 **V**xxxxx):

Description	**Voltage**	**Duration**
Normal operation	10-30V	Unlimited
Protection turns on, device turns off.	34V	Unlimited
Maximum voltage	<70V	Unlimited
Maximum voltage impulse	90V	5 mili seconds

Mechanical features

Table 1 FM5300 physical interfaces and operation environment

Part name	Physical specification
Navigation LED	LED
Modem LED	LED
GNSS	Antenna connector SMA female outer shell, female inner pin
GSM	Antenna connector SMA male outer shell, male inner pin
Socket 2x10	Tyco Micro MATE-N-LOK™ or similar
USB	Mini USB socket
Port1	RS232 port channel 1 (RJ45 socket)
Port2	RS232 port channel 1 (RJ45 socket)
Audio port	RJ9

Operation environment
Operation temperature: -25°C … +55°C Storage temperature: -40°C … +70°C Storage relative humidity 5 … 95 % (non condensating)

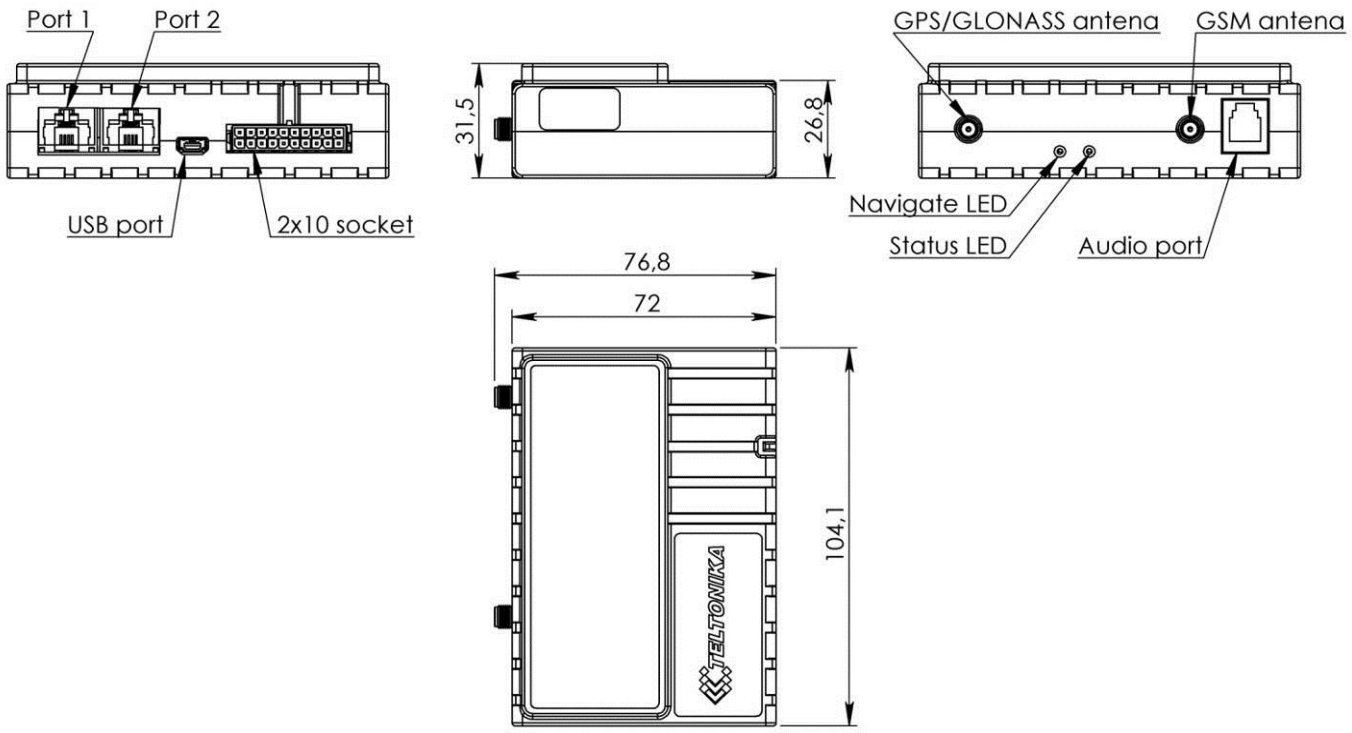

Figure 1 FM5300 view & dimensions in mm (tolerance ±2mm)

2.3 Technical Information about internal battery!

Ni-MH Rechargeable battery, 8.4V, 550 mA, 4,62 Wh.

FM5300 operating time with internal backup battery depends on temperature, data sending frequency (SMS and GPRS), and accumulator age, number of charge/discharge cycles.

For example:

- In sleep mode a new FM5300 device, operating time approximately 15 hours
- In deep sleep mode – 137 hours
- Operating time for a new FM5300 device, working in normal mode (records are being acquired every 10 sec. and sent in packets of 4 records every 60 sec.), is approximately 2 h 30 min.

2.4 FM5300 hardware modification for external backup battery.

Special version of FM5300 allows to connect additional external backup battery. Such FM5300 modification should be purchased by special order. Contact sales manager for details.

Operating from backup accumulator:
Uext > Ubat -> **Uext.**
Ubat > Uext -> **Ubat**

FM5300 should be connected only with 8 V Sealed lead rechargeable batteries (accumulators). Teltonika is not responsible for any harm caused by using wrong accumulator type.

Connect any capacity 8 V accumulator due to customer's needs of backup operation time. Time of charging the accumulator increases while using the accumulator with higher capacity.

Operation (discharge) temperature -40° C…+60° C (check with accumulator datasheet)
Operation (charge) temperature -20° C…+50° C (check with accumulator datasheet).
Operating time depends on temperature, data sending frequency (SMS and GPRS), and accumulator age, number of charge/discharge cycles.

2.5 Electrical characteristics

Table 2 Electrical characteristics

CHARACTERISTIC DESCRIPTION \ VALUE	Min.	Typ.	Max.	Unit
SUPPLY VOLTAGE				
Supply Voltage (Recommended Operating Conditions)	11.8	-	30	V
Supply Voltage (for internal rechargeable battery charging proper functioning)	11.8	-	30	V
POWER SUPPLY CURRENT (HARDWARE VERSION WITH INTERNAL BATTERY)				
Deep Sleep, average, Icc.ds	-	1.5	4	mA
Sleep, average, Icc.ds, Vcc=12V	-	35	-	mA
Sleep, average, Icc.ds, Vcc=24V	-	20	-	mA
Ucc=12.6V, all modules fully working, internal battery is charging, Icc1	-	-	315	mA
Ucc=12.6V, all modules fully working, internal battery is charged, Icc2	-	-	245	mA
Ucc=25.2V, all modules fully working, internal battery is charging, Icc3	-	-	158	mA
Ucc=25.2V, all modules fully working, internal battery is charged, Icc4	-	-	123	mA
SUPPLY CURRENT (HARDWARE VERSION WITH EXTERNAL BATTERY)				
Deep Sleep, average, Icc.ds	-	1.5	4	mA
Ucc=12.6V, all modules fully working, external battery is charging, Icc5	-	-	566	mA
Ucc=12.6V, all modules fully working, external battery is charged, Icc6	-	-	245	mA
Ucc=25.2V, all modules fully working, external battery is charging, Icc7	-	-	283	mA
Ucc=25.2V, all modules fully working, external battery is charged, Icc8	-	-	123	mA
DIGITAL OUTPUT (OPEN DRAIN GRADE)				
Drain current (Digital Output OFF)	-	-	120	uA
Drain current (Digital Output ON, Recommended Operating Conditions)	-	-	300	mA
Static Drain-Source resistance (Digital Output ON)	-	-	300	mOhm
DIGITAL INPUTS				

CHARACTERISTIC DESCRIPTION / VALUE	Min.	Typ.	Max.	Unit
Input resistance (DIN1, DIN2, DIN3)	15	-	-	kOhm
Input Voltage (Recommended Operating Conditions)	0	-	Supply voltage	V
Input Voltage threshold (DIN1)	-	7,5	-	V
Input Voltage threshold (DIN2, DIN3, DIN4)	-	2,5	-	V
ANALOG INPUTS				
Input Voltage (Recommended Operating Conditions), Range1	0	-	10	V
Input resistance, Range1	-	120	-	kOhm
Input Voltage (Recommended Operating Conditions) Range2	0	-	30	V
Input resistance, Range2	-	147	-	kOhm
OUTPUT SUPPLY VOLTAGE 1-WIRE[2]				
Supply Voltage	3,3	-	3,9	V
Output inner resistance	-	7	-	Ohm
Output current (U_{out} > 3.0V)	-	30	-	mA
Short circuit current (U_{out} = 0)	-	130	-	mA
CAN INTERFACE				
Internal terminal resistors CAN bus	-	No	-	Ohm
Differential input resistance	19	30	52	kOhm
Recessive output voltage	2	2.5	3	V
Differential receiver threshold Voltage	0.5	0.7	0.9	V
Common mode input voltage	-30	-	30	V

When connecting a COM port to an active external device keep in mind that the first power supply must be connected to FM5300, and then the external device should be powered. Connecting external devices when FM5300 is powered off is not recommended.

[2-] 1-wire Supply voltage PIN is dedicated for 1-wire devices ONLY, do not use it for any other purpose.

2.6 Absolute Maximum Ratings

Table 3 Absolute maximum ratings

CHARACTERISTIC DESCRIPTION / VALUE	Min.	Typ.	Max.	Unit
Supply Voltage (Absolute Maximum Ratings)	-32		32	V
Digital output clamp threshold voltage (Absolute Maximum Ratings), (I_{drain} = 2mA)	36			V
Digital Input Voltage (Absolute Maximum Ratings)	-32		32	V
Analog Input Voltage (Absolute Maximum Ratings)	-32		32	V
Voltage on Supply Voltage 1-Wire (Absolute Maximum Ratings)	0		10	V
Voltage on Data Input/Output 1-Wire (Absolute Maximum Ratings)	0		10	V
Voltage on CANH, CANL (Absolute Maximum Ratings)	-58		58	V

3 CONNECTION AND PINOUT

3.1 SIM card insert scheme

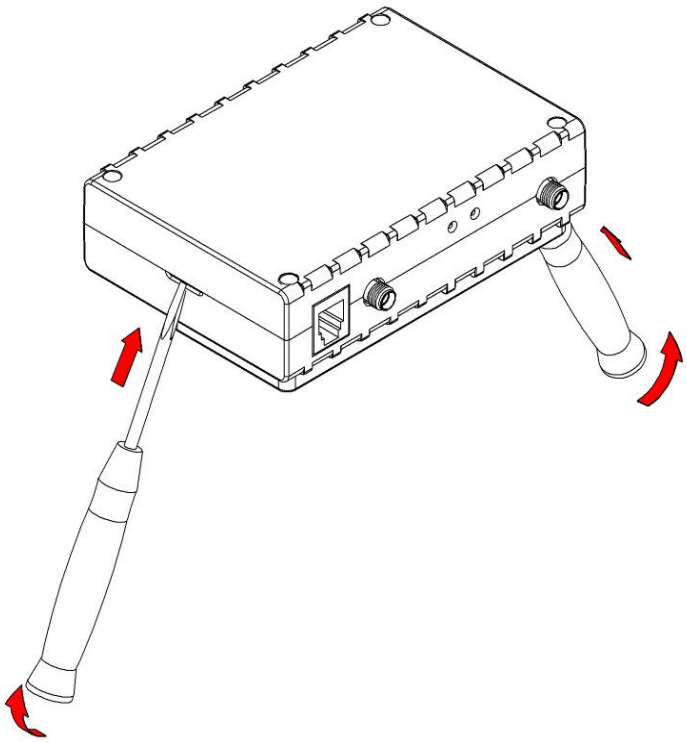

①

Gently open FM5300 case using screwdrivers

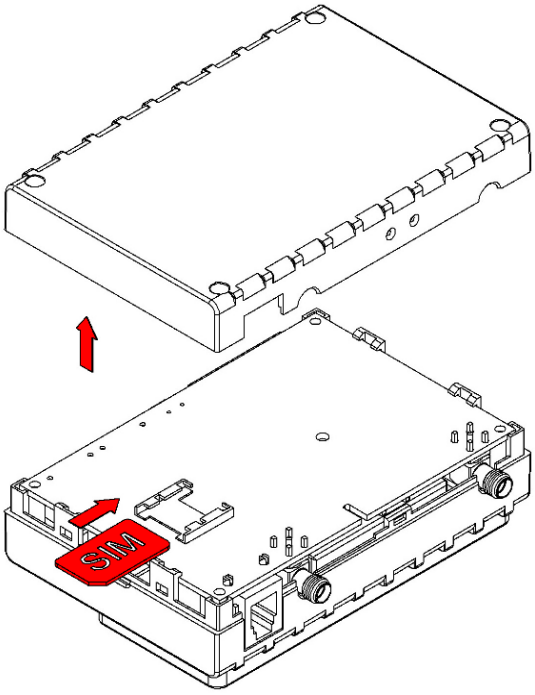

②

Take off FM5300 case and insert SIM card as shown

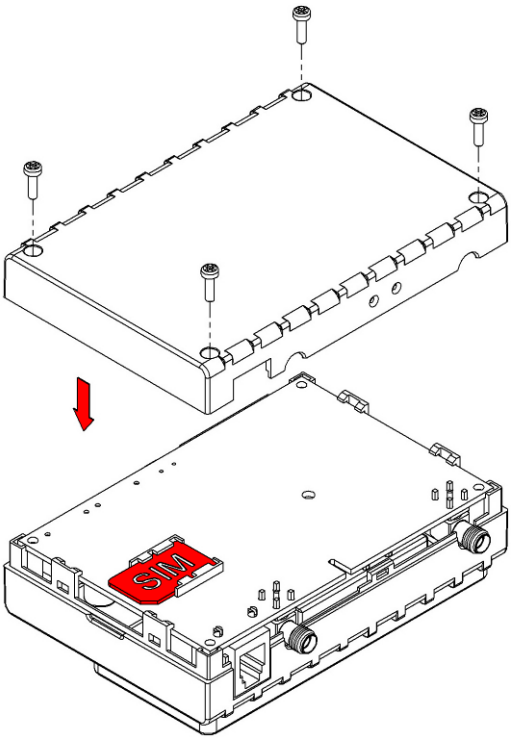

③

Assemble device as shown and put screws into the holes

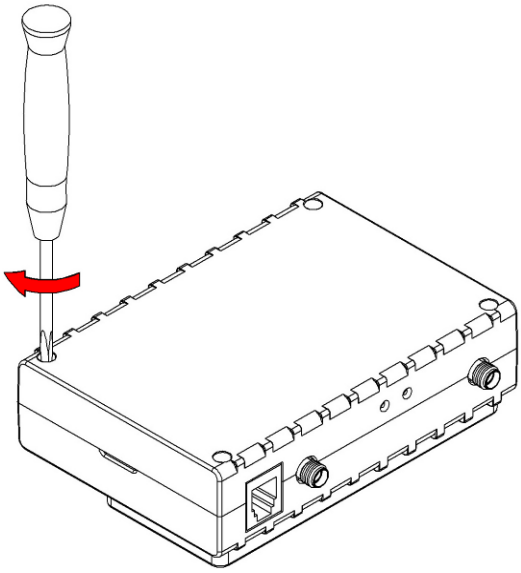

④

Screw all 4 screws

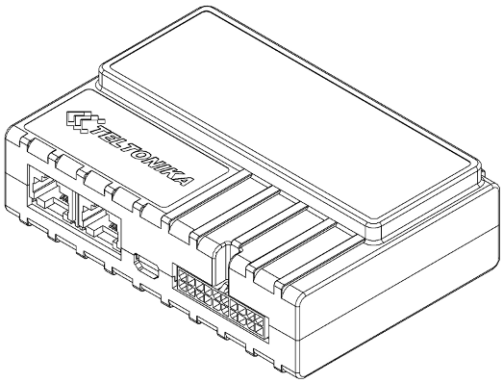

⑤

Device is ready

3.2 Installing FM5300 drivers

Software requirements

- Operating system 32-bit and 64-bit: Windows XP with SP3 or later, Windows Vista, Windows 7.
- MS .NET Framework V3.5 or later (http://www.microsoft.com).

Drivers

Please download Virtual COM Port drivers from Teltonika website: http://avl1.teltonika.lt/downloads/FM53/vcpdriver_v1.3.1_setup.zip

Installing drivers

Extract and run VCPDriver_V1.3.1_Setup.exe. This driver is used to detect FM5300 device connected to the computer. Click 'Next' in driver installation window (figures below):

Figure 2 Driver installation window

This will launch the device driver installation wizard. In the following window click 'Next' button again:

Figure 3 Driver installation window

Setup will continue installing drivers and will display a window about successful process in the end. Click 'Finish' to complete setup:

Figure 4 Driver installation window

You have now installed drivers for FM5300 device successfully.

3.3 Navigate LED

Table 4 Navigate LED operation

Behaviour	Meaning
Permanently switched on	GPS signal is not received
Blinking every second	Normal mode, GPS is working
Off	GPS is turned off because: • Deep sleep mode Or • GPS antenna short circuited

3.4 Status LED

Table 5 Status LED Operation

Behaviour	Meaning
Blinking every second	Normal mode
Blinking every 2 seconds	Deep sleep mode
Blinking fast for a short time	Modem activity
Blinking fast constantly	Boot mode
Off	• Device is not working Or • Device firmware being flashed

3.5 Socket 2×10 pinout

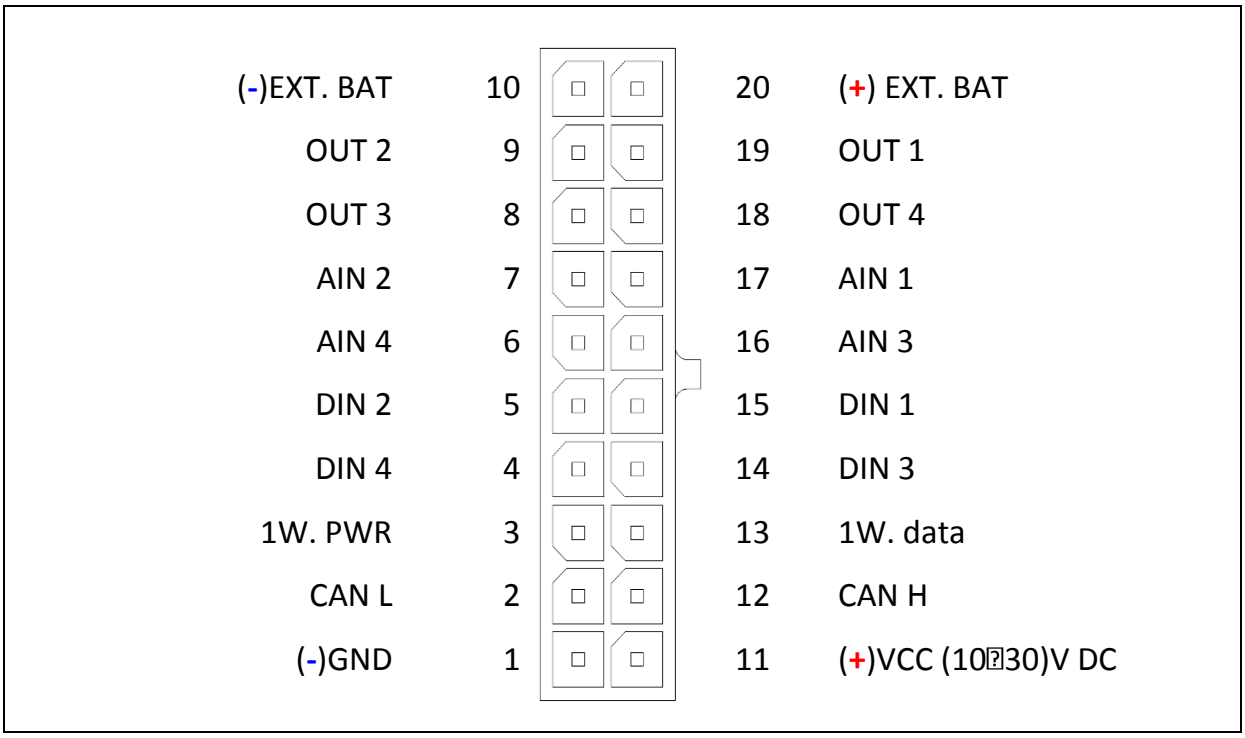

Figure 5 2x10 socket pinout

Table 6 2x10 SOCKET PINOUT DESCRIPTION

Pin Nr.	Pin Name	Description
1	(-)GND	(-) Ground pin. (10…30) V DC*
2	CAN L	SAE J1939 CAN interface Low channel
3	1W. PWR	Power supply pin for Dallas 1-Wire® devices
4	DIN 4	Digital input. Channel 4
5	DIN 2	Digital input. Channel 2
6	AIN 4	Analog input, channel 4. Input range: 0 – 30V/ 0 – 10V DC
7	AIN 2	Analog input, channel 2. Input range: 0 – 30V/ 0 – 10V DC
8	OUT 3	Digital output. Channel 3. Open collector output
9	OUT 2	Digital output. Channel 2. Open collector output
10	Ext. Battery (—)	This pin is used connected with pin 20 (Ext. Battery (+)). The function of these pins is to disconnect the internal accumulator during shipment or storage. When pin 10 and pin 20 are connected, the internal accumulator is on, while disconnected – the internal accumulator is off.
11	(+)VCC (10...30) V DC	Power supply pin
12	CAN H	SAE J1939 CAN interface High channel
13	1W. data	Data channel for Dallas 1-Wire® devices
14	DIN 3	Digital input, channel 3
15	DIN 1	Digital input, channel 1 (RESERVED FOR IGNITION LINE)
16	AIN 3	Analog input, channel 3. Input range: 0 – 30V/ 0 – 10V DC

Pin Nr.	Pin Name	Description
17	AIN 1	Analog input, channel 1. Input range: 0 – 30V/ 0 – 10V DC
18	OUT 4	Digital output. Channel 4. Open collector output
19	OUT 1	Digital output. Channel 1. Open collector output
20	Ext. Battery (+)	This pin is used connected with pin 10 (Ext. Battery (—)). The function of these pins is to disconnect the internal accumulator during shipment or storage. When pin 10 and pin 20 are connected, the internal accumulator is on, while disconnected – the internal accumulator is off.

3.6 USB

When FM5300 is connected to a PC it creates a STM Virtual COM Port, which can be used as a system port (to flash firmware and configure the device).

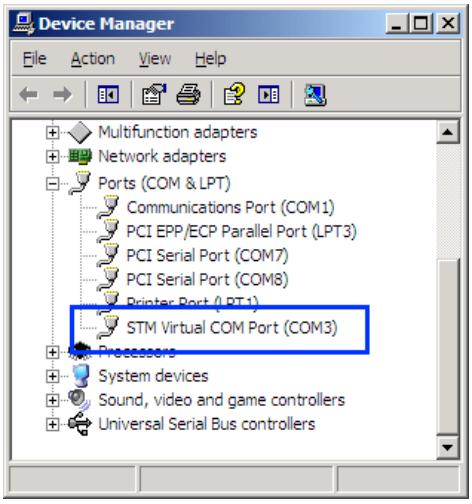

Figure 6 COM-Ports

3.7 Accessories

Note: Teltonika does not provide any additional equipment like panic buttons, door sensors or other, except of 1 – wire devices: TTJ-101 thermo sensor and I-Button. These devices are not included in FM5300 package and can be offered by special order only.

1 – Wire devices

One of the FM5300 features is realized 1-Wire data protocol, which enables connection of up to three thermometers (DS1820, DS18S20 and DS18B20) and I-Button DS1990A see Figure 7 Digital thermometer DS1820 and TTJ 100 connection scheme. Figure 8 show FM5300 and 1-wire devices connection schemes.

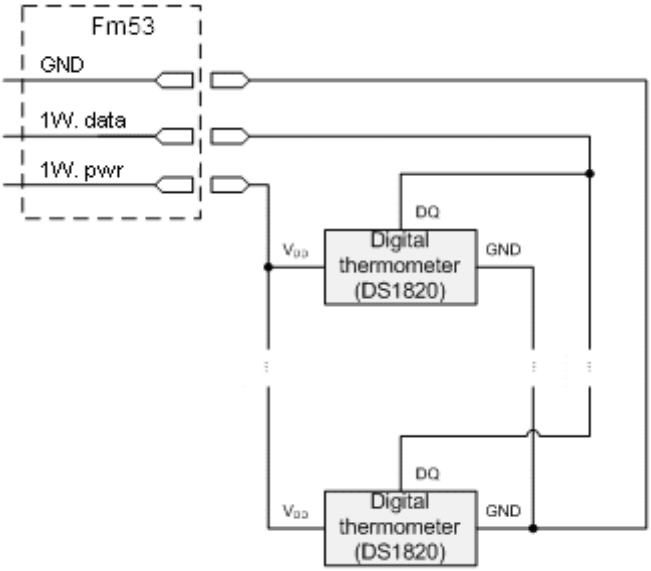

Left row of pins

1W. PWR (FM5300 – pin3)	
1W. Data (FM5300 – pin13)	
GND (FM5300 – pin1)	
Digital Input	

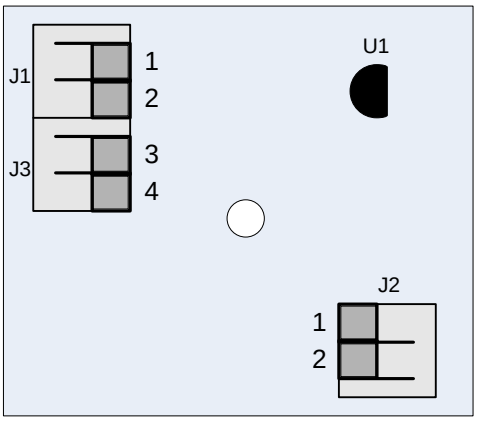

Right row of pins

	Vpp (+5 Volts DC) – power source for external digital sensor
	Output from external digital sensor

Figure 7 Digital thermometer DS1820 and TTJ 100 connection scheme

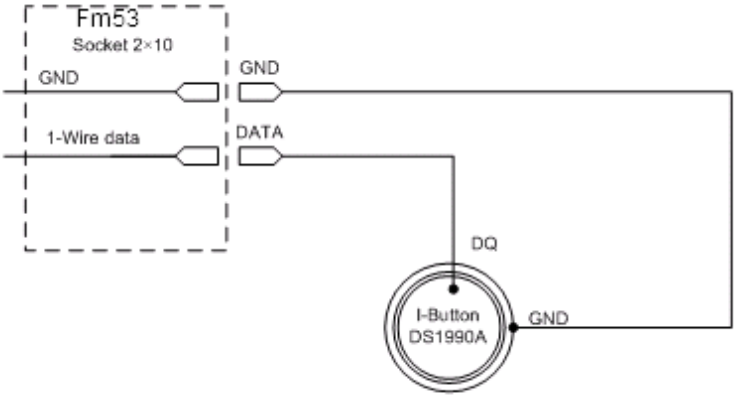

Figure 8 Digital key "I-Button" DS1990A connection scheme

Fuel Tank sensors

A fuel tank level sensor exists in most of the cars, which shows the approximate fuel level in the driver's indicator panel. It is possible to connect FM5300 Analog input (if sensor returns analogue signal proportional to fuel level). Figure describes the connection scheme to the FM5300 and fuel tank sensor. After the connection to the tank fuel level sensor, calibration is needed. Calibrations needed due of the fact that most fuel tank sensors are not linear. Calibration is being performing by measuring voltage dependence on volume of fuel in tank.

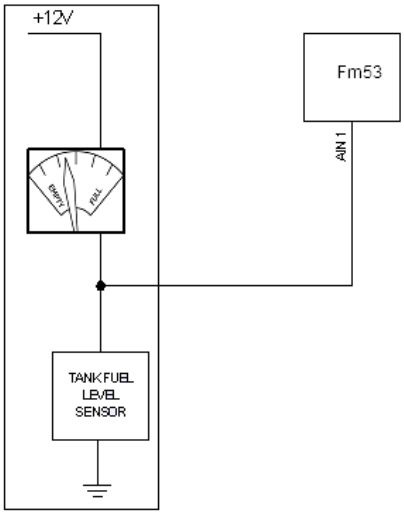

Figure 9 Fuel sensor scheme

Impulse counters

Figure describes the connection scheme to the FM5300. Here two pulse meters are used, where one is mounted on the direct flow valve and the other on the return flow valve. Data from both meters is sent to the FM5300. Then FM5300 calculates DIN3-DIN4. Resulting difference equals to fuel consumption. Filter should be used on the direct flow pipe to prevent any damage caused by impurities in the liquid. The filter mounted in the meter inlet is only a safety filter and it is too small to act as a strainer.

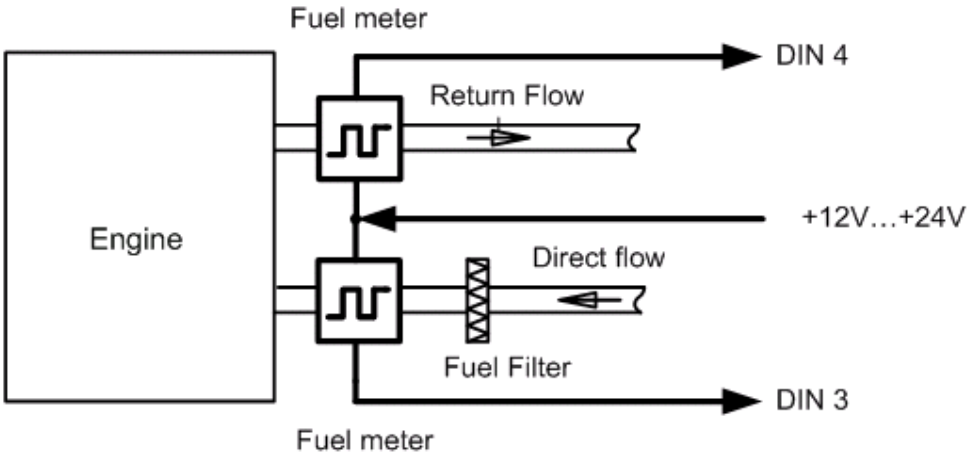

Figure 10 Pulse fuel meters connection scheme

Alarm buttons, door sensors, etc

Alarm buttons, door sensors, ignition, etc return two states: high or low voltage. Digital inputs should be used to read this information. Figure below shows how to connect alarm button, door sensor, etc.

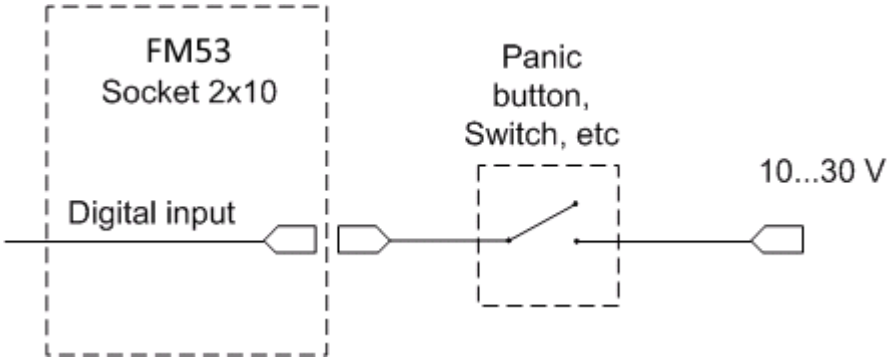

Figure 11 Panic button connection

In cases when sensor output signal is negative an additional relay has to be installed to convert negative signal to positive.

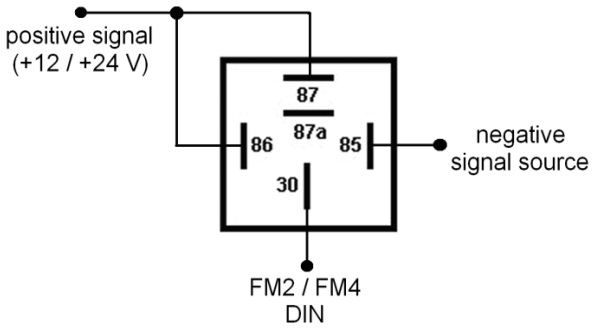

Figure 12 Inverting relay connection

Immobilizer relay

When connected a shown below, FM5300 disables engine starter when output is ON. More details about relays can be found below.

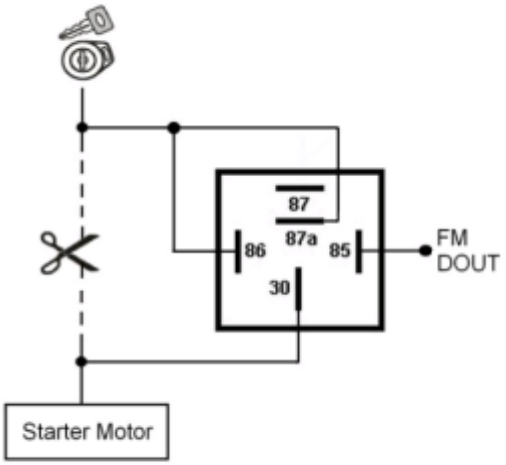

Figure 13 Immobilizer relay connection

Relays

A simple automotive relays is used to invert input signal or to immobilize engine starter. Note, that they are available as 12 or 24 Volt.

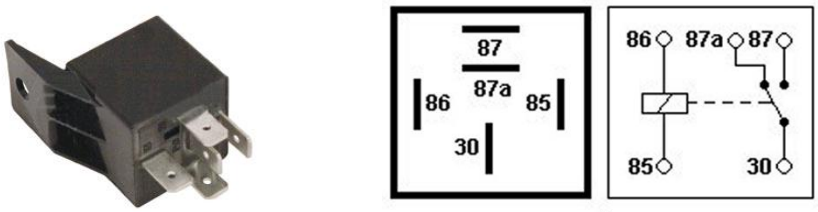

Figure 14 Relay pinout

4 FIRMWARE

4.1 Updating firmware using USB cable

FM5300 functionality is always improving, new firmware versions are developed. Current module firmware version can be retrieved from Configurator.

Connect FM5300 to PC with the USB cable. Launch “Firmware Updater”, select COM port to which device is connected, click connect, and when IMEI and Firmware version fields are filled, start the update. Device needs some time to send IMEI and Firmware version, so do not be afraid if IMEI will not show up immediately, disconnect and after 1-2 minutes try to connect again. When starting update device will open link with updater. With link open device downloads firmware and starts installing. Wait thru all these screens as in Figure 16 for firmware to update. Update process may take up to several minutes.

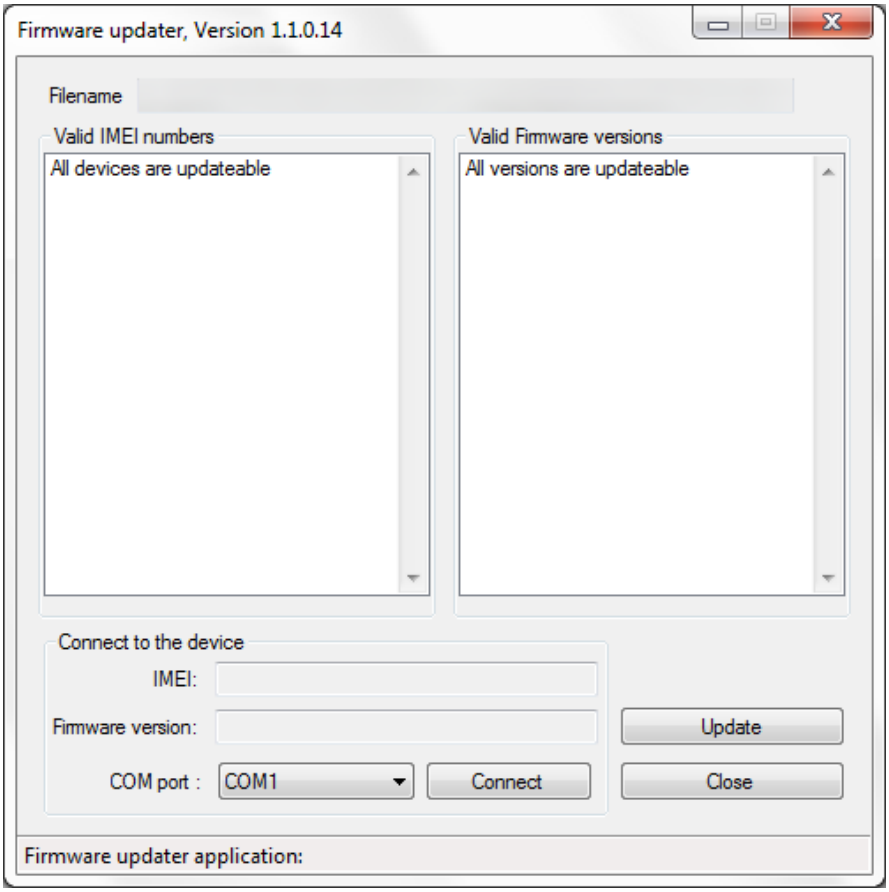

Figure 15 FM5300 firmware updater screen

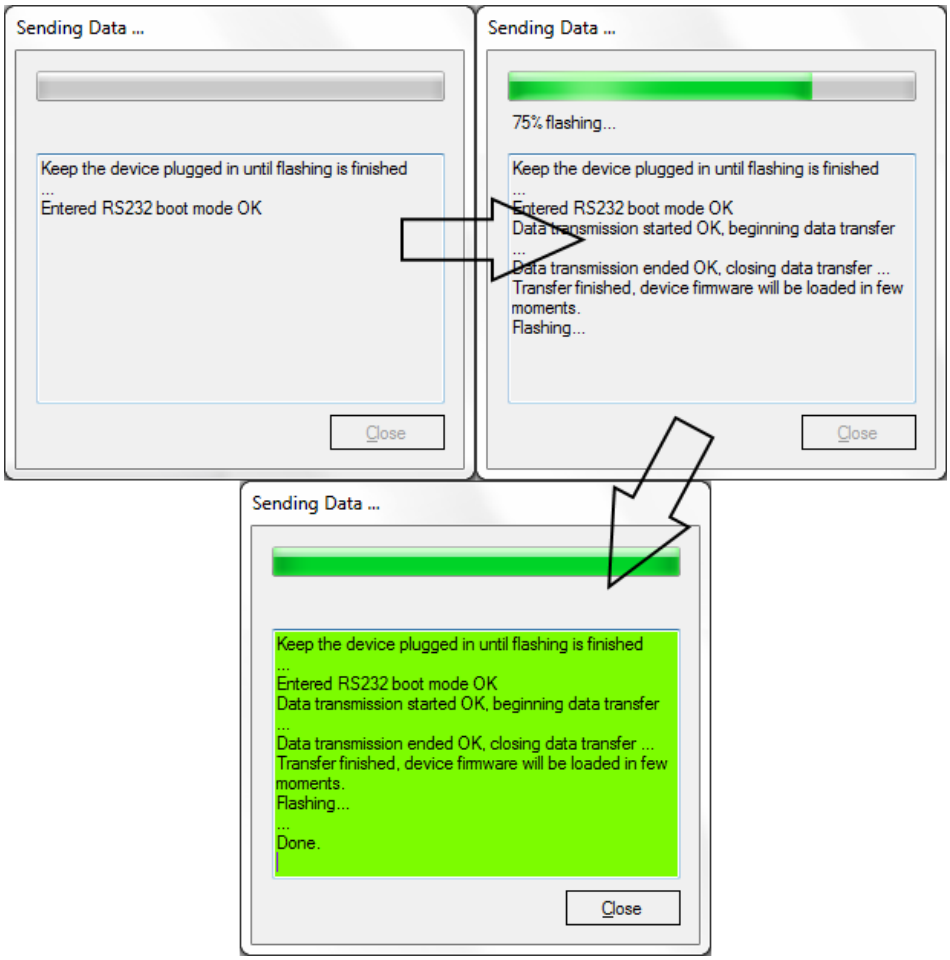

Figure 16 Firmware updating processes

When you see a green table like in **Figure 16**, it means that the firmware is flashed to FM5300 successfully. You may now close the update window and start using your FM5300 device.

5 OPERATIONAL BASICS

5.1 Operational principles

FM5300 module is designed to acquire records and send them to server. Records contain GPS and I/O information. Module uses GPS receiver to acquire GPS data and is powered with 3 data acquire methods: time-based, distance-based and angle-based. Method's details are described in Data Acquisition chapter 8. All data is stored in flash memory and later can be sent via GPRS or SMS channels. GPRS mode is the most preferred data sending mode. SMS mode is mostly used in areas without GPRS coverage or when GPRS usage is too expensive.

GPRS and SMS settings are described in chapters 6.3.1.2.1 and 6.3.1.2.3. FM5300 communicates with server using special data protocol. Data protocol is described in device protocols documentation. Please contact Teltonika sale manager to find out more about protocols documentation purchase.

FM5300 can be managed by SMS commands (SMS Command list is described in SMS Command List section) and GPRS commands (GPRS Command list is described in GPRS Command List section). Module configuration can be performed over TCP or via SMS. Configuration parameters and modes are described in device protocols documentation.

5.2 Operational Modes

FM5300 is designed to operate in two different modes: Normal Mode and Deep Sleep Mode (Standby mode). Normal Mode means that FM5300 is fully functional and performs all the functionality mentioned above in Operational principals section.

Deep Sleep Mode is designed to dramatically reduce power consumption. It is a separate mode and certain conditions must be fulfilled to switch from Normal operation and enter this mode. Detailed information about how FM5300 enters/exits Deep Sleep Mode and what functions does FM5300 perform while in this mode can be found in chapter 9.

5.3 Accelerometer

FM5300 has a built in 3 axis accelerometer which allows the device to indicate if vehicle is moving or not, as well as measure acceleration. Accelerometer sensitivity can be configured – it has 2 configurable global parameters: start and stop timeouts that define time intervals in seconds. To indicate that a vehicle is moving, FM5300 constantly (in frequency of 10 Hz) checks for g force change on X, Y and Z axes. If measured g force keeps exceeding the set limit (it is not configurable) for defined time interval in "Movement Filter Start" field (Figure 10), then the vehicle is considered as moving. Same settings for idle indication apply – if g force change is less than the set limit for time interval defined in "Movement Filter Stop" field then the vehicle is considered as idle (not moving).

Example for default parameters: Movement Filter Start = 1 and Movement Filter Stop = 30 means that movement will be detected after 1 second and stop will be detected after 30 seconds of inactivity.

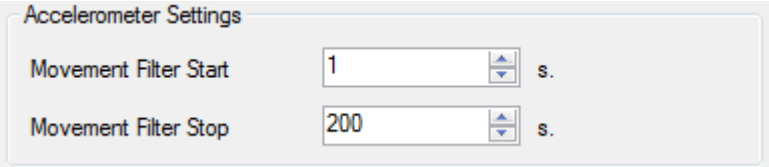

Figure 17 Accelerometer settings

5.4 Virtual Odometer

Virtual odometer is used to calculate travelled distance in FM5300 as a separate I/O element. When FM5300 detects movement, it starts counting distance using GPS signal: every second it checks current location and calculates distance between current and previous point. It keeps adding these intervals until it is time to make a record, then FM5300 records its location and adds odometer value, which is equal to the sum of all distances, measured every second. When record is made, odometer resets to zero and distance calculation starts all over again.

Virtual odometer as an I/O element can be also used with Trip feature, read chapter 6.3.1.3.3.

5.5 Voice Functionality

FM5300 has functionality to receive and make voice calls. To enable this functionality a telephone handset with electret microphone and RJ-9 connector must be connected to “Audio” port.

In “Global Parameters”, “Call Settings” section (Figure 18) there are four parameters: “Call number”, “Call trigger”, “Ringtone”, and “Auto answer”. To initiate a call an appropriate digital input has to be selected as a “Call Trigger”. To trigger the call selected input has to be connected to the Ext. Battery (+). When DIN disconnected from Ext. Battery (+)the call is triggered, FM5300 dials the number which is defined in “Call Number” field. To initiate a call to FM5300 dial a number of the SIM card that is inserted in FM5300. When FM5300 has an incoming call it can play a selected tone from the “Ringtone” list. FM5300 will auto answer the call after number of rings defined in “Auto answer” field.

When FM5300 receives incoming call it triggers DOUT4, if you answer the call or fold, DOUT4 is turned off. Be sure no associated external equipment is connected to this output. DOUT4 can be used for buzzer, to hear an incoming call.

“Voice Settings” (Figure 18) section includes settings for “Microphone level” to regulate microphone sensitivity and “Speaker level” to define how loud will be the speaker.

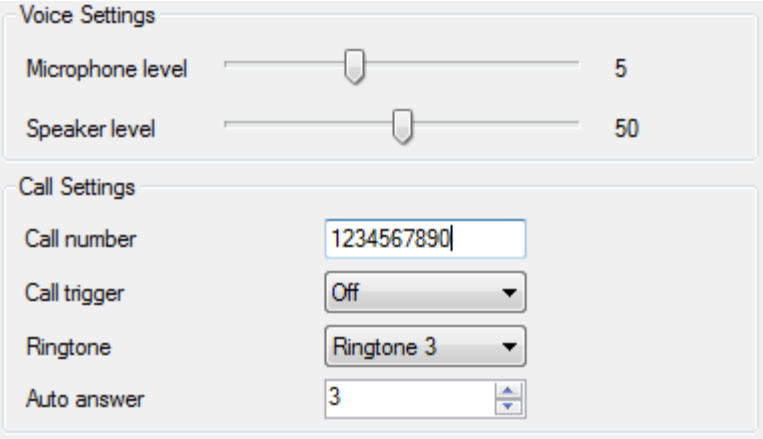

Figure 18 Voice and Call Settings

5.6 Profiles

FM5300 has 4 profiles saved in Flash memory of the module. Every profile has a list of parameters, which enables FM5300 to operate in different modes while using different profiles. The easiest way to understand what is a profile is to compare it to a list of instructions that are written for different cases. You are allowed to setup up to 4 different module behaviours. Global parameters contain settings that are common for all 4 profiles. This means that if FM5300 is set to call to predefined number, you will be able to call it while using any profile.

Profile 3 is default profile for FM5300. It is always loaded on the very first start-up and further profile switching is proceeded after operator scan or I/O element changes.

Switching between profiles (changing behaviour) can be performed by GSM Operator (mostly used for roaming applications), or by Profile switching depending on I/O Event (on I/O value changing). More information about Profile switching functionalities can be found in chapters 7.1 (Switching by GSM Operator) and 7.2 (Switching by I/O Element).

5.7 Features

Using available features can greatly increase FM5300 usability options.

Scenarios

Four scenarios are available on FM53 device:

a. Digital Output No.1 is used by scenarios – ECO driving/Green driving **and/or** Over Speeding;
b. Digital Output No.2 is used by scenarios – Authorized Driving **or** Immobilizer.

ECO driving/Green driving Scenario. Gives the ability to periodically monitor driving characteristics and warn the driver against over accelerating, braking or cornering. More about ECO driving/Green driving read in chapter 10.1

Over Speeding Scenario. Helps to prevent from exceeding fixed speed and inspects driver if needed. DOUT1 is controlled by scenario for user needs, to manage buzzer, LED etc.

Authorized Driving Scenario. Gives ability to use vehicle only for 50 specific iButton owners (specified in iButton list). DOUT2 is controlled by scenario for user needs, to manage buzzer, LED etc.

Immobilizer Scenario. Vehicle can be used only if iButton is connected. In this scenario iButton list is not used – connect any iButton to pass Immobilizer security. DOUT2 is controlled by scenario for user needs. DOUT2 is continuously OFF. Dout2 turns ON if Ignition turns ON (Din1=1). After iButton ID is read (any iButton is attached), DOUT2turns OFF. After iButton identification DIN1 (ignition) can be turned OFF (Din1=0) for no longer than 30 seconds, otherwise immobilizer must be repeated.

Note: It is possible to use both ECO driving/Green driving and Over Speeding scenarios at the same time, while Authorized Driving and Immobilizer are not – one of these has to be chosen.

Trip

Trip customizable feature enables user extended monitoring of performed trips (from engine start at present location to engine stop at arrived location), log their start and stop points, view driven total distance. Event will be **generated (included into send records) only** when trip starts and finishes.

Geofencing

Geofencing is another feature which is highly customizable and can detect wherever a car enters or leaves customized areas. More about Geofencing can be read in chapter 6.3.1.3.4 .

Auto Geofencing feature, if enabled, is activated automatically by turning off car ignition. Next time before driving user has to disable Auto Geofencing with iButton or by turning on car ignition. In case of theft, the car leaves Auto Geofencing zone without authorization and FM5300 device automatically sends high priority record to AVL application.

iButton list

Ibutton list is used to enter authorized iButton ID codes, which are used to authenticate driver in Authorized driving and Auto Geofencing options.

6 CONFIGURATOR

6.1 STARTUP

FM5300 configuration is performed via FM5300 Configurator program. FM5300 Configurator can be downloaded from http://avl1.teltonika.lt/downloads/FM53/. Contact sales manager to get the latest FM5300 Configurator version. FM5300 configurator operates on Microsoft Windows OS and uses MS .Net Framework 3.5 or higher. Please ensure that MS .Net Framework 3.5 or later is installed on your PC before starting configurator. Latest MS .Net Framework version can be downloaded from official Microsoft web page.

Module configuration is performed over USB cable or COM1. Configuration process starts from starting FM5300 Configurator program and then connecting to FM5300 device via “Connect” button located on the top left corner of configurator. If one of the communication sources (USB cable or COM1) is connected to the device, the configurator will detect it automatically and if connected successfully IMEI, Version fields, which were empty, now are filled with certain numbers depending on Modem IMEI and firmware version of your device (Figure 19).

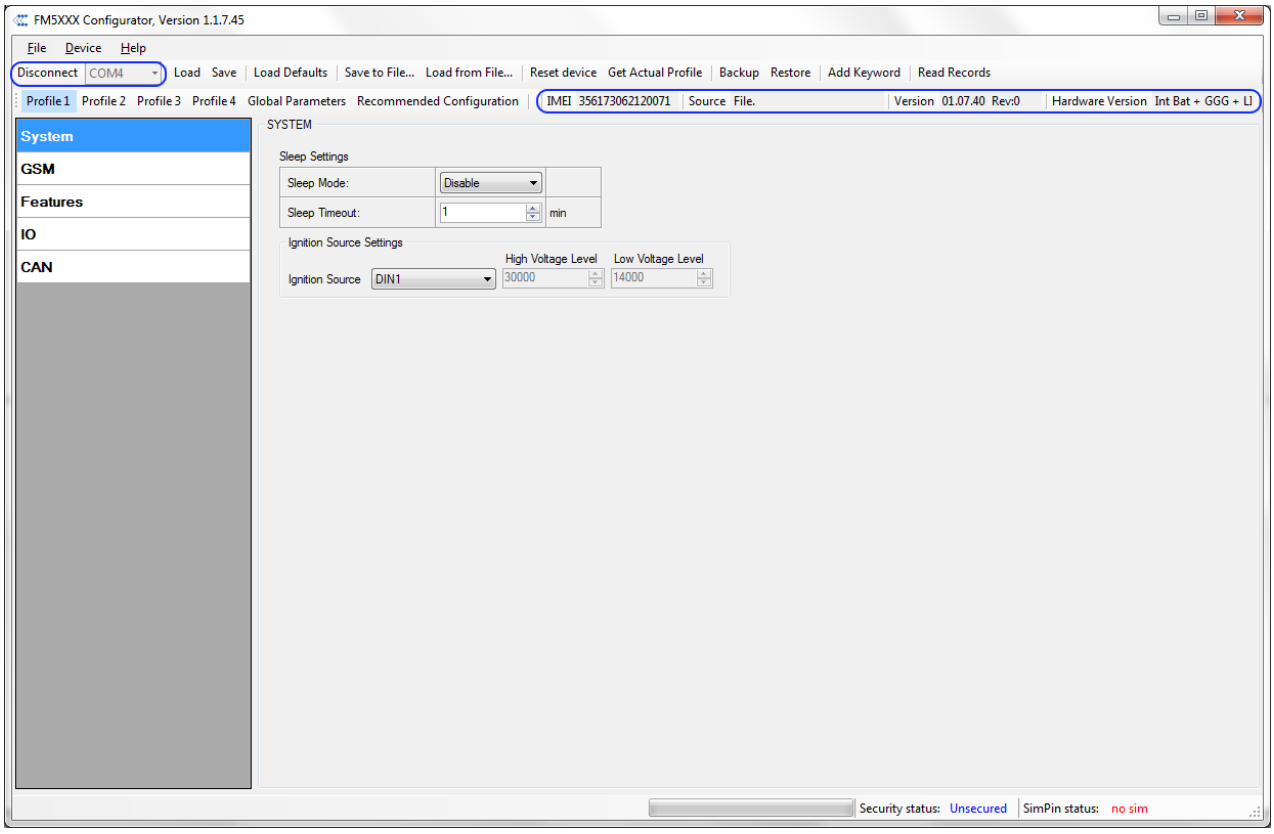

Figure 19 FM5300 Configurator window

6.2 Configurator structure

FM5300 has four user editable profiles, which can be both loaded and saved to the device. User can also revert to default settings, by pressing Load Defaults button. After any modification of configuration settings it has to be saved to FM5300 device, otherwise it will not be written to device flash memory.

FM5300 Configurator is divided into 5 main areas (Figure 20):

- Buttons area;
- Information area;
- Profiles or global parameters selection area;
- Settings menu;
- Configurable parameters and values menu.

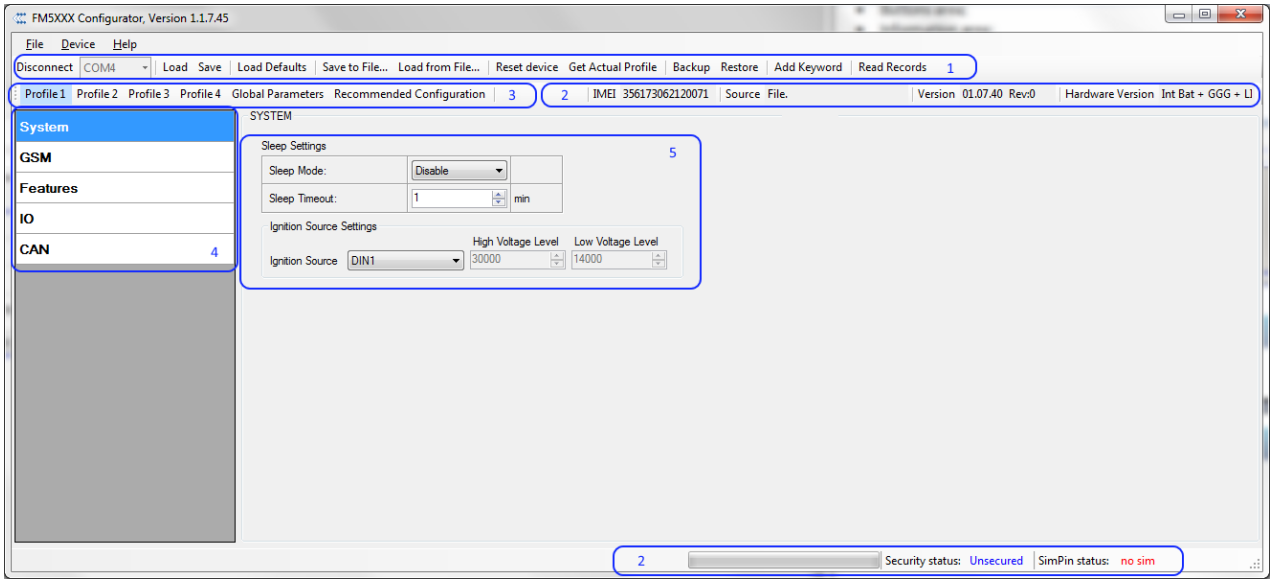

Figure 20 FM5300 Configurator window structure

Buttons area

Table 7 Configurator buttons area description

Main Buttons	
Button	**Description**
Connect	connects the device
Load	reads configuration parameters from FM5300 Flash memory
Save	saves configuration parameters to FM5300 Flash memory
Load Defaults	loads default FM5300 settings that later can be modified
Save to File…	allows user to save currently entered settings to .XML file for later usage
Load from File…	allows user to load configuration saved in .XML extension file
Reset device	reboots FM5300 and displays processor firmware version
Additional Buttons	
Button	**Description**
SIM PIN	allows to enter PIN code if inserted SIM card has activated PIN code security
Add Keyword[3] */ Change Keyword / Switch Security Off*	buttons are used to protect configurator from unauthorized access to configuration

[3] Keyword is of 4 - 10 symbol length (Latin text and/or numbers). If a keyword is set, every time user reconnects FM5300 to USB or COM1 port he will be asked to enter a valid keyword when connecting FM5300 to configurator. User is given 5 attempts to enter a valid keyword before blocking the configurator.

Information area

FM5300 information area is divided into 2 parts located on the top right and bottom of the configurator. When configurator is connected to the device via USB or COM1 port all necessary information about the device is shown here:

- IMEI – unique number for every FM5300 and usually servers recognize different devices by this number;
- SOURCE – configuration source (device or file);
- VERSION – firmware version of the device;
- HARDWARE VERSION – hardware version of the device;
- STATUS – status bar;
- SECURITY STATUS – status of the configurator security;
- SIM PIN STATUS – status of SIM card in the device;

Profiles/global parameters selection area

FM5300 has 4 user editable profiles stored in Flash no. 1-4 memories and one extra profile stored in Flash no. 0 which cannot be edited by user. Profile from Flash no. 0 is used by system and cannot be selected as active, while profiles from Flash no. 1-4 are fully editable and can be selected as active.

Reading profiles and Global parameters from Flash memory is a very simple procedure. By pressing "Load" button all 4 profiles and Global parameters are loaded to the configurator (Figure 21). To configure 3rd profile choose the TAB named "Profile 3" and all configurable parameters of this profile will be available to change.

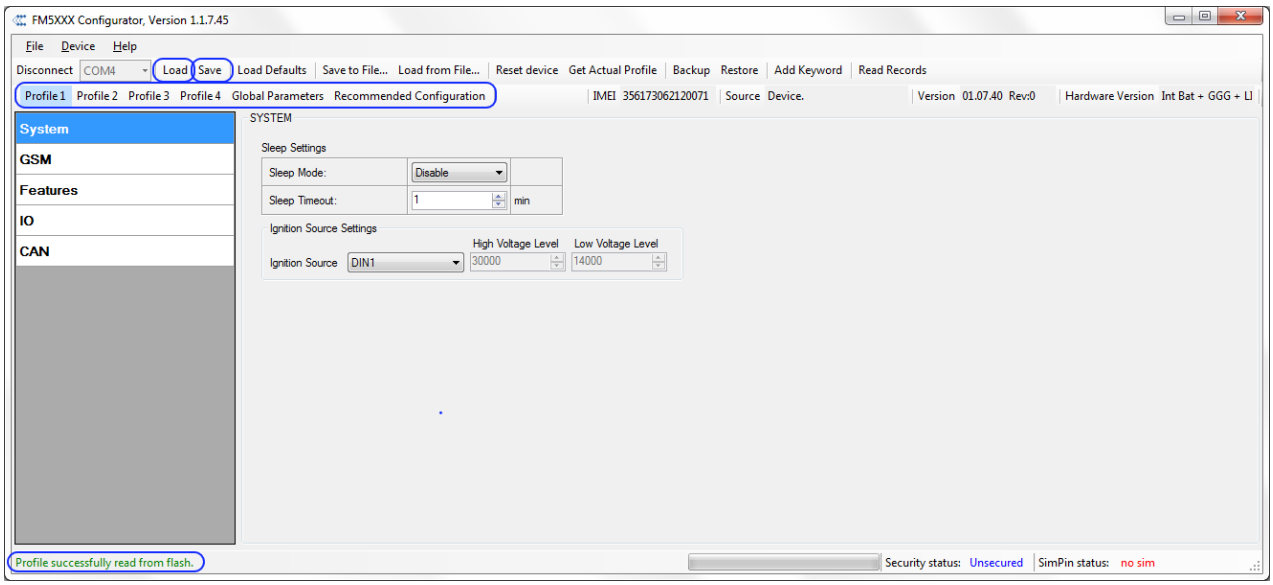

Figure 21 FM5300 Configurator profiles loading window

After changing profile and global parameters, changes can be saved to FM5300 Flash. By pressing "Save" button all 4 profiles and Global parameters are saved to the Flash (Figure 22).

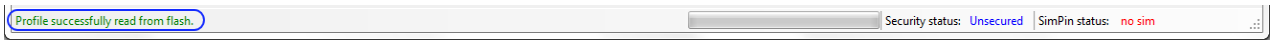

Figure 22 FM5300 Configurator profiles saving information

6.3 Parameters Configuration

Global parameters Settings

Global parameters do not depend on selected profile; they are common for all profiles. To configure these parameters choose the TAB named “Global Parameters” and make all necessary changes (Figure 23)

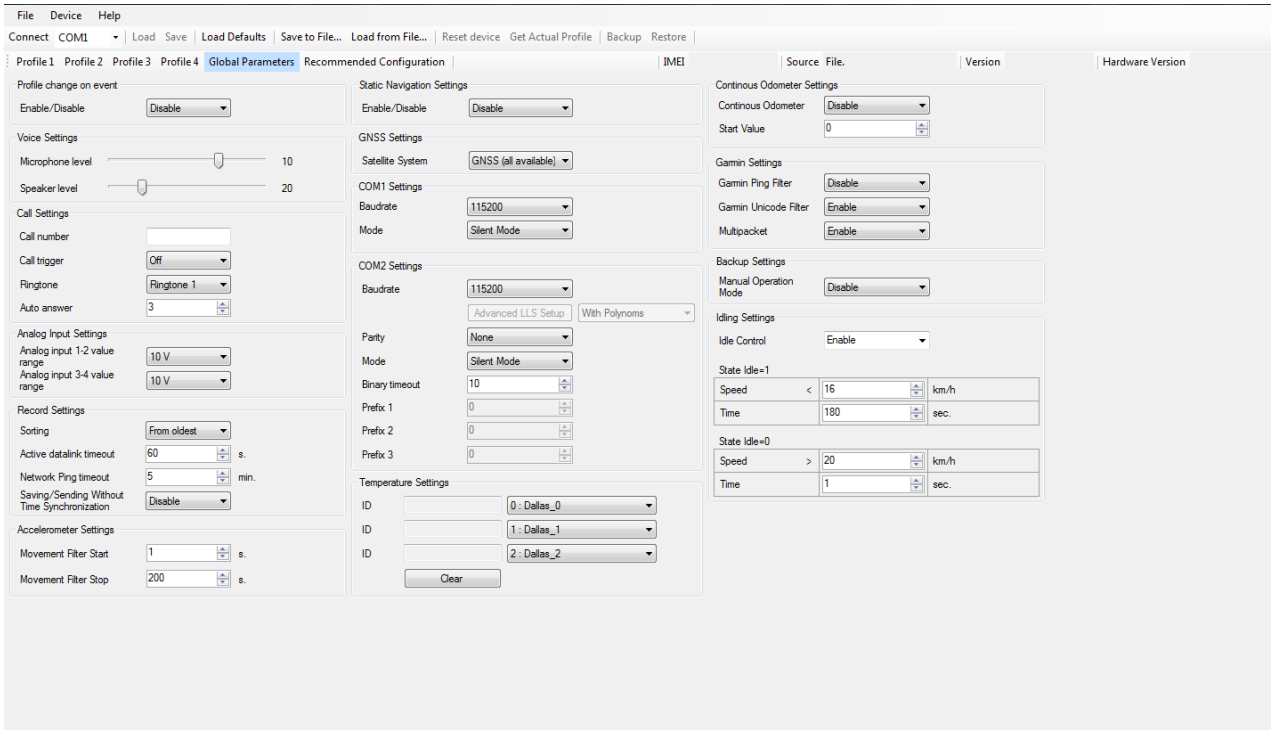

Figure 23 FM5300 Global parameters

Table 8 Global parameters description

Parameter Name	Parameter description
Profile change on event	Allows selecting profile switching method. When ‘Profile change on event’ is disabled – FM5300 switches profiles depending on GSM operator code method. Otherwise it switches profiles depending on I/O events (see details in chapter 7.2).
Voice settings	Allows to setup microphone sensitivity and speaker loudness level.
Call Settings	Allows entering one number to which FM5300 will be able to call to. Call trigger defines input, which will be used to receive or make a call. Usually to that input a button is connected (“Digital Input 1” is not allowed, because this input is dedicated for ignition).
Record Settings	Are used to switch between two data sending modes: starting from newest records or starting from oldest record. Active data link timeout defines how many seconds should FM5300 keep connection to the server before disconnecting after successful data transfer. Note that even if it disconnects from server, it always keep active GPRS session.
Analog input	Defines maximum input voltage on analog input. Possible cases are: all

Parameter Name	Parameter description
settings	inputs 0-30V, 0-10V, two inputs 0-10V while other two 0-30V maximum input range has impact on precision – values on 0-10V input are measured more precisely than 0-30V (higher resolution).
Accelerometer settings	Defines accelerometer sensitivity range (0.5g, 1g, 1.5, 2g), how many seconds should movement be detected by accelerometer in order to set movement for FM5300 application and how many seconds after movement is not detected by accelerometer FM5300 application should treat like movement is still there.
Static Navigation settings	Allows enabling or disabling functionality.
GNSS Settings	Allows choosing compatibility mode and satellite System.
COM1 Settings	Allows configuring COM1 baud rate, parity and flowing control.
COM2 Settings	Allows configuring COM2 baud rate, parity mode, end line, binary timeout and 3 prefixes.
Temperature Settings	When two or three temperature sensors are connected to FM5300 it is necessary to define sensor ID to certain property separately. This way FM5300 will know which temperature sensor is which property. FM5300 automatically updates ID's field if any sensors are connected while configuring device via configurator.
Continuous Odometer settings	Allows enabling or disabling functionality and start value setting.
Garmin settings	Allows enabling or disabling functionality and Unicode.
Dual LLS mode	In effect only if LLS mode is selected on both COM1 and COM2 Possible values: 0- Use of polynoms DISABLED. (default). To server will be send raw LLS values. 1- Use of polynoms ENABLED. Polygonoms will be applied on LSS1 and LLS2 values. Note: Sanity check of polynoms values are still in effect, so if polynoms are invalid then sending will default to RAW LLS values sending.
Backup Mode	It was working automatically by default. With 01.06.00 version this behavior is configurable. It is useful to have more manual control. It also allows with single SMS to go back to older working configuration.
Idling Settings	Allows enabling or disabling functionality. By default Idling detection functionality is enabled. Vehicle is considered to be in idling state, if detected speed is less than configured speed (from State Idle=1 table section) for configured time duration (from State Idle=1 table section). Vehicle is considered to be in moving state, if detected speed is more than configured speed (from State Idle=0 table section) for configured time duration (from State Idle=0 table section). Device gets speed value

Parameter Name	Parameter description
	from GPS data (NMEA strings). If there is no GPS fix, then speed is zero. If such situation will happen, then Ignition will be monitored instead of speed: •If Ignition is off for configured time duration (from State Idle=1 table section), then vehicle is considered to be in idling state; •If Ignition is on for configured time duration (from State Idle=0 table section), then vehicle is considered to be in moving state

Settings and configurable parameters menu

Every FM53 profile has four main groups of parameters:

1. System – main parameters for all device;
2. GSM has 3 subgroups
    a. GPRS
    b. SMS
    c. OPERATOR LIST
3. Features
4. I/O

6.3.1.1 System Settings

System settings have 2 configurable parameter (Figure 24):

- Sleep settings, where user can disable sleep, turn on or deep sleep.
- Ignition source settings, for choosing which ignition source prefer to use DIN1 or External Voltage. While using External Voltage must to set levels.

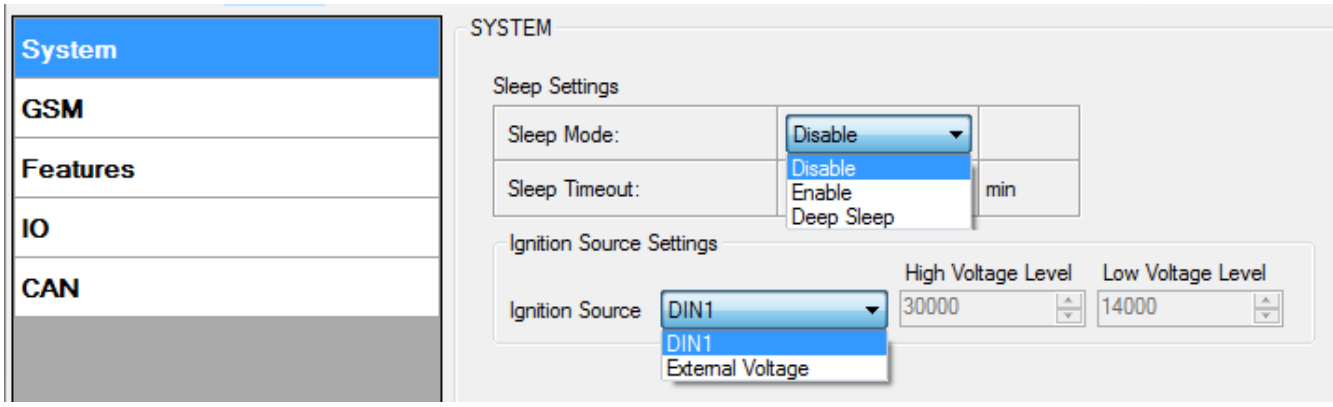

Figure 24 System Settings Configuration

When Vehicle Generator is working supply voltage is usually 2V – 4V volts higher than when it not.

Ignition from power voltage cannot be used for:

- Immobilizer Scenario
- Authorized Driving Scenario

While generator is working, it is to late block engine.

If ignition from power voltage is selected, DIN1 value will be ignored for these functionalities:

- Sleep
- Deep Sleep
- Trip
- Autogeofence
- Odometer
- Eco Driving
- Green Driving
- Static Navigation

Ignition is 1, when power voltage is within high and low levels

Example:

High Level: 15000
Low Level: 13000

If External Voltage 14V, then ignition is ON.
If External Voltage 12V, then ignition is OFF.
If External Voltage 16V, then ignition is OFF.

6.3.1.2 GSM Settings

6.3.1.2.1 GPRS

'GPRS' defines main parameters for FM5300: GSM operator APN and GPRS username and password (optional – depending on operator), destination server Domain (can be entered either IP or domain name) and port. Also both TCP and UDP protocols are supported.

Some operators use specific authentication for GPRS session – CHAP or PAP. If any of these is used, APN should be entered as 'chap:<APN>' or 'pap:<APN>'. I.e. if operator is using APN 'internet' with CHAP authentication, it should be entered as 'chap:internet'. Information about APN and authentication type should be provided by your GSM operator.

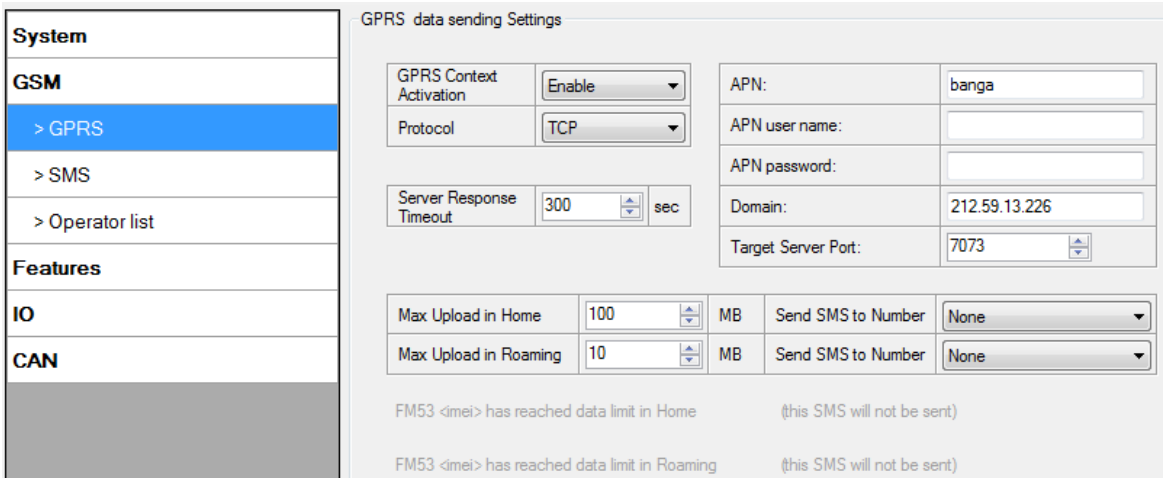

Figure 25 GSM->GPRS Settings Configuration

6.3.1.2.2 Data limits functionality

Data limit can be configured for Home ("Max Upload in Home") and Roaming ("Max Upload in Roaming") Separately. Currently Min Settings for Home and Roaming are 10MB. User can choose to get SMS notification if Data limit has been reached. SMS is send only one time.
User can get current status of datalimits using SMS: **'getlimits'**.
User can reset data limits using SMS: **'resetlimits'**.
These SMS can be GPRS commands too. When data limit will be hit following scenario will be executed:

In TCP mode:

Open GPRS only if there is high or panic Priority. Send only high or panic priority. Low priority records sending will recover on month 1 day.

In UDP mode:

Open GPRS only if there is high or panic Priority. Send only high or panic priority. Low priority records sending will recover on month 1 day.

6.3.1.2.3 SMS

Essential fields in 'SMS' part is 'Login' and 'Password' (Figure 26). This login and password is used with every SMS sent to FM5300. If login and password are not set, every SMS sent to FM5300 device has to include two spaces before command (<space><space><command>).

Command structure: *<login><space><password><space><command>.*

Examples:

1. SMS login and password are set – "asd 123 getgps"
2. SMS login and password are not set – " getgps"

Phone numbers have to be written in international standard, without using "+" or "00" signs in prefix. If no numbers are entered in configuration then commands SMS are allowed to be sent from all GSM numbers.

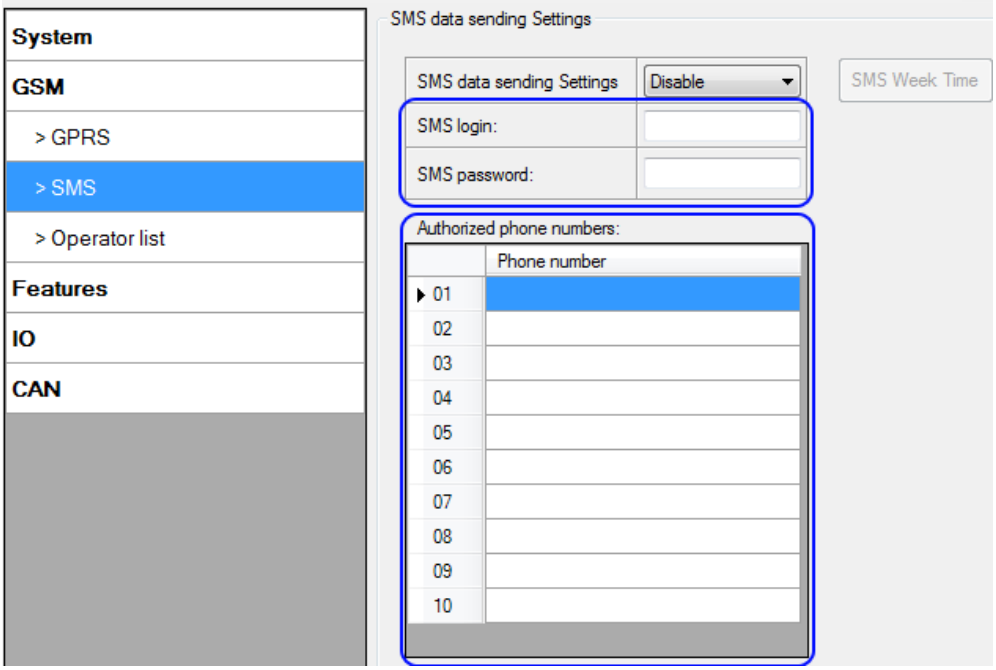

Figure 26 GSM->SMS Settings Configuration (1)

SMS data sending Settings enables or disables **periodic** data and event SMS sending to server (Figure 27). Configuration is divided into 3 main parts:

1. Enable/Disable functionality;
2. SMS Week Time button (can be pressed only if functionality is Enabled);
3. Server Phone Number (has to be written in first position of Authorized phone numbers);

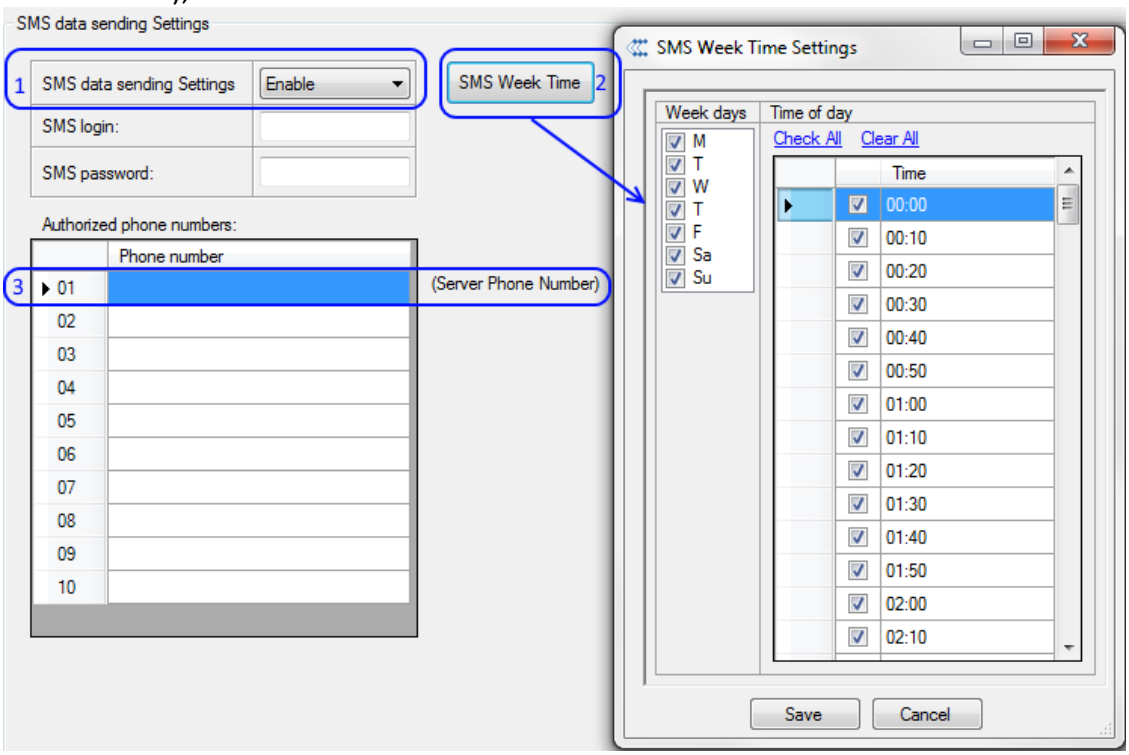

Figure 27 GSM->SMS Settings Configuration (2)

Using these settings FM5300 can send SMS with 24-coordinates in one SMS; it is used in areas where no GPRS coverage is available. Module collects data and sends to server binary SMS containing information about last 24 collected points. SMS sending schedule is set in SMS Week Time tab. 24-Coordinates SMS decoding is described in device documentation document. Please contact Teltonika sale manager to find out more about protocols documentation purchase.

6.3.1.2.4 Operator List

FM5300 is able to use GPRS with all operators but if at least one operator is entered in the list, FM5300 is allowed to connect to GPRS only while operating in listed operator's network. Also operator list has influence on profile switching (see details in chapter 7.1) if Global parameter "Profile switching on event" is disabled.

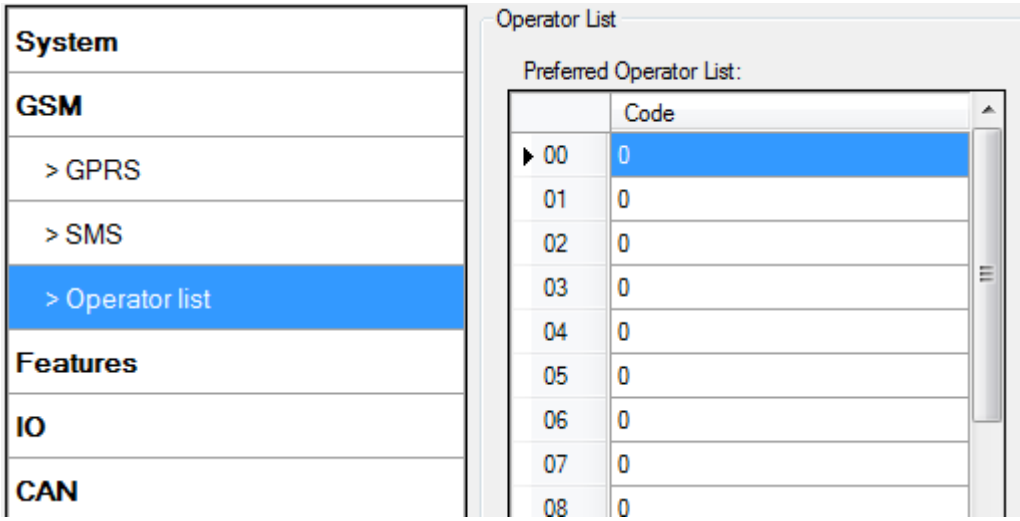

Figure 28 FM53 Operator List Configuration

6.3.1.3 Features

6.3.1.3.1 Mode

FM5300 is able to collect records using three methods at the same time: time, distance and angle based data acquisition (chapter 8). Send and Save Parameters configuration is available in Features->Mode category (Figure 29):

- Min Period – time period change that initializes record save.
- Min Angle – angle change that initializes record save (only if vehicle is moving).
- Min Distance – distance change that initializes record save (only if vehicle is moving).
- Send period – GPRS data sending to server period. Module makes attempts to send collected data to server every defined period. If it does not have enough records (depends on parameter Min. Saved Records described above), it tries again after defined time interval.
- GPRS Context Week Time tab – most GSM billing systems charge number of bytes (kilobytes) transmitted per session. During the session FM5300 makes connection and transmits data to a server. FM5300 tries to control the session as much as possible. Session can last hours, days, weeks or session can be closed after every connection in certain GSM networks – this depends on GSM network provider. GPRS Context Week Time defines session re-establishing schedule if session was closed by network. New GPRS context is opened if 10 minutes are left till time checked in table. Therefore if all boxes are checked, FM5300 is able to open new connection anytime. At scheduled time match FM5300 checks for GPRS session activity. If GPRS session is alive, FM5300 sends data to server according to Send period parameter. If it is not, FM53 checks if it is able to re-establish the session.

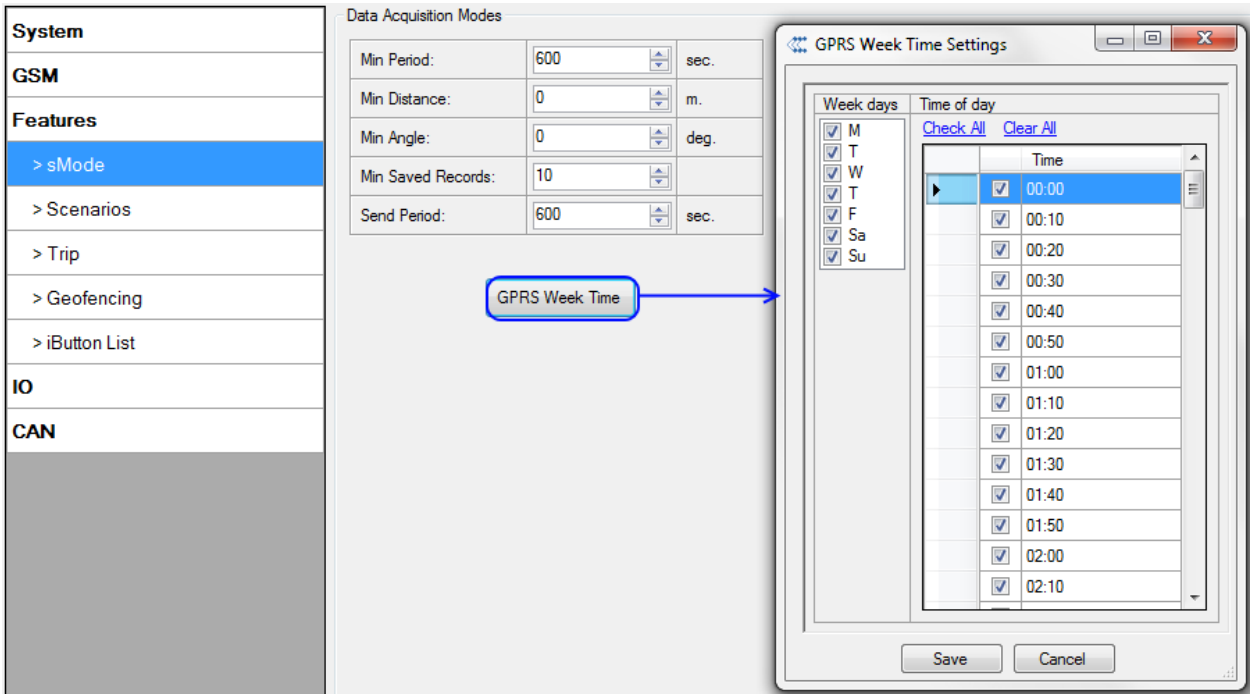

Figure 29 FM53 Features->Mode Configuration

6.3.1.3.2 Scenarios

In Scenarios window four different scenarios are available, two per each Digital Output (DOUT). Only one per digital output can be active at a same time, e.g. DOUT1 can have either ECO driving/Green driving/Green driving or Over Speeding enabled, DOUT2 can have either Authorized Driving or Immobilizer enabled.

Scenarios configurable parameters are shown in Figure 30. All values of these parameters are described in chapter 10.

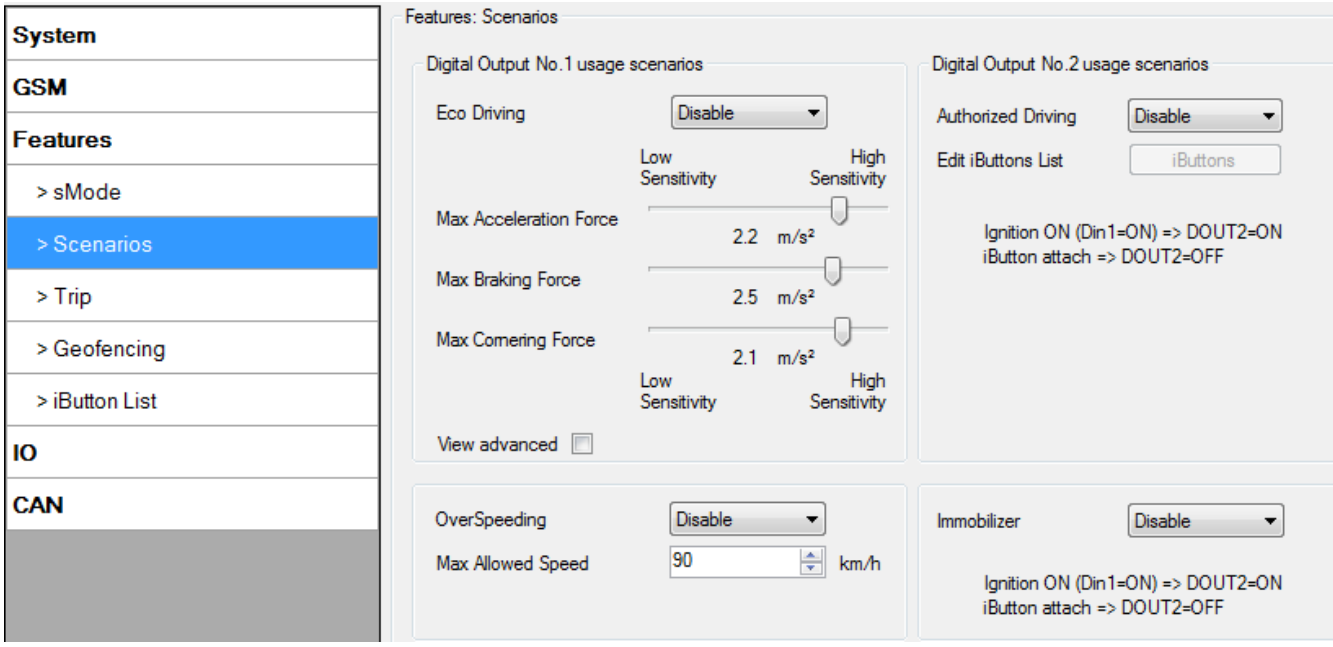

Figure 30 FM53 Features->Scenarios Configuration

6.3.1.3.3 Trip

Trip window offers user to configure Trip feature. If Trip is enabled configuration of parameters is available:

- Start Speed – speed, which is detected as minimum speed to indicate Trip start.
- Ignition Off Timeout – timeout to wait if ignition was off, to detect Trip stop.
- Continuous distance counting – Not or Continuous can be chosen. For this feature I/O Odometer must be enabled.

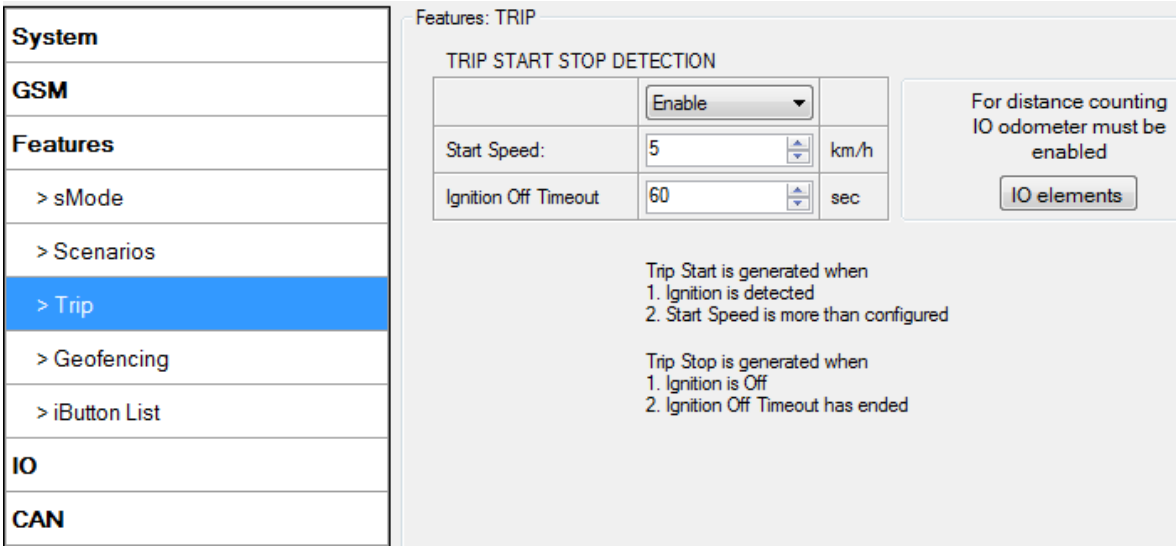

Figure 31 FM53 Features->Trip Configuration

If I/O Odometer is enabled and Continuous distance counting variable is set to Continuous, Trip distance is going to be counted continuously (from Trip start to Trip stop). This value is written to I/O Odometer value field. When Trip is over and next Trip begins, Odometer value is not reset to zero, it is counted continuously again.

If I/O Odometer is enabled and Continuous Distance Counting variable is set to Not, then distance is going to be counted only between every record made. This value is written to I/O Odometer value field and reset to zero every new record until Trip stops. If later all Odometer values are summed up manually user gets distance driven over the whole Trip period.

6.3.1.3.4 Geofencing

6.3.1.3.4.1 Geofencing settings

FM5300 has 20 configurable Geofence zones and it can generate event when defined Geofence zone border has been crossed.

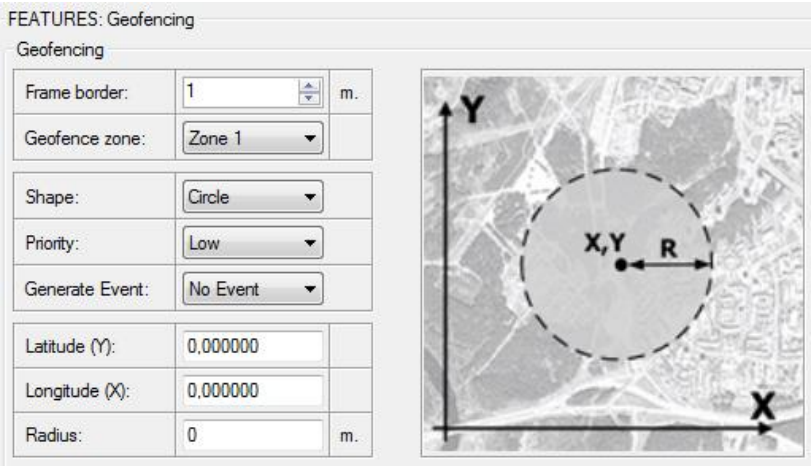

Figure 32 FM53 Features->Geofencing Configuration (1)

Configuration of the parameters is available in Features->Geofencing (Figure 32)

- Frame border – frame border is an additional border around Geofence zone. It is additional area around defined zone used to prevent false event recording when object stops on the border of the area and because of GPS errors some records are made inside area and some – outside. Event is generated only when both borders are crossed. See figure for details: track 1 is considered to enter the area while track 2 does not.

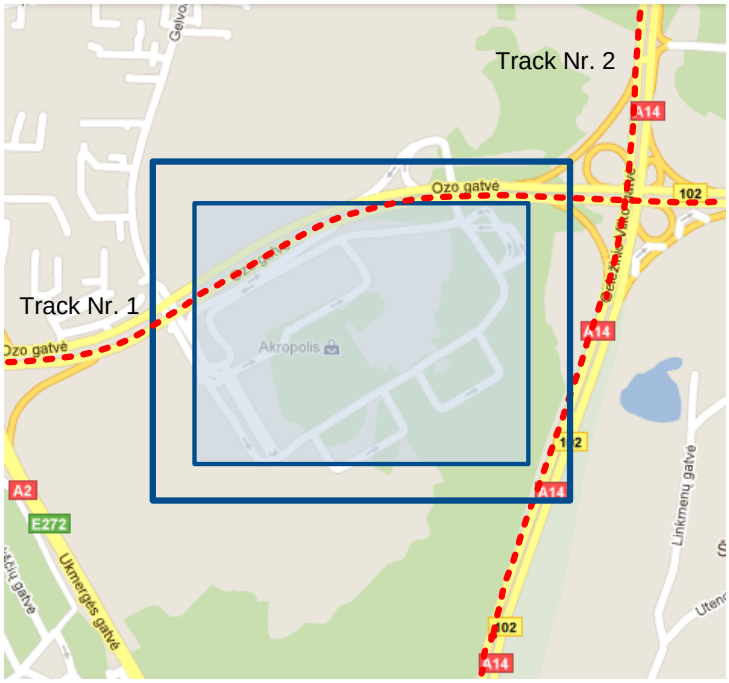

Figure 33 Geofence border

- Shape – can be rectangular or circle
- Priority – priority of Geofence event: low, high or panic, SW21, SW22, SW23, SW24. These levels define priority of event information sending to server. See I/O element description for more details about priorities.
- Generate event (On entrance, On exit, On both) – choose when record will be generated (or no event);
- X1 – geofence zone left bottom corner X coordinate;
- Y1 – geofence zone left bottom corner Y coordinate;
- X2 or R – geofence zone upper right corner X coordinate (radius of circle when Circular zone used);
- Y2 – geofence zone upper right corner Y coordinate;

6.3.1.3.4.2 AutoGeofencing settings

AutoGeofence – the last known position after movement = off. If your car is being taken away – you can be notified. The shape and size of the geofence zones are configurable. When object will leave geofence zone device will trigger an asynchronous message.

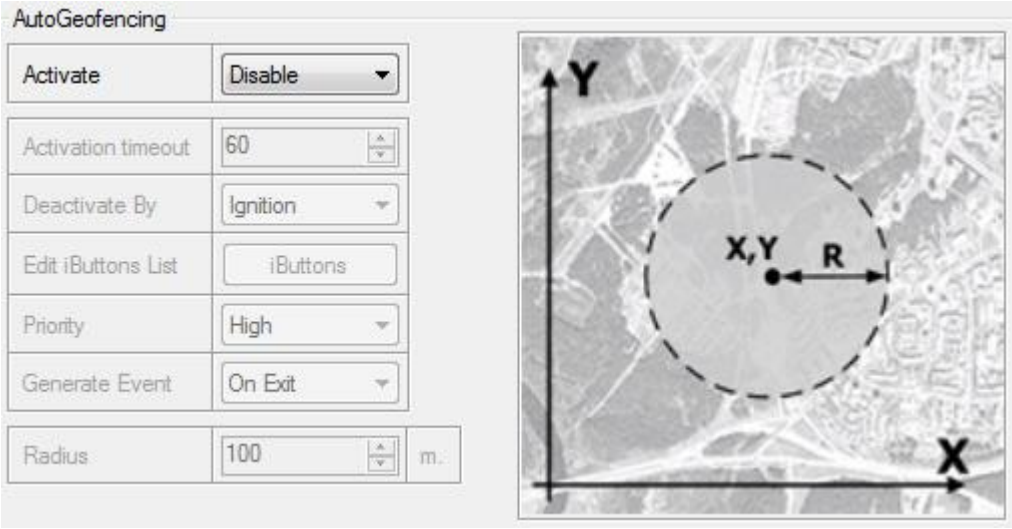

Figure 34 FM53 Features->Autogeofencing Configuration

- AutoGeofencing option can be configured by following parameters visible in Figure 34 below.
- Activate – Enable or Disable AutoGeofence functionality.
- Activation TMO – Time period before Geofence is activated after vehicle stops.
- Deactivate By:
- Ignition – If ignition becomes high it will disable AutoGeofenze Zone.
- iButton – if iButton is attached it will disable AutoGeofence Zone.
- Edit iButton List – if list is not empty, attached iButton is tested against an iButton list, if match is found AutoGeofence zone is disabled.
- Priority – Priority of generated event, which will be applied to saved record.
- Exit Event – Event generation on Geofence exit.
- On Both – Event generation on Geofence exit.
- generation on Geofence entrance or exit.
- No Event

Auto Geofencing does not require entering coordinates, instead it requires GPS visibility. If vehicle stopped and activation timeout is reached, Auto Geofence will be created around the vehicles last position by set Radius value. Auto Geofence event generation works the same as Geofencing mentioned above.

6.3.1.3.5 iButton List

iButton list is used to enter authorized iButton ID codes, which are used to authenticate driver in Authorized driving and Auto Geofencing options.

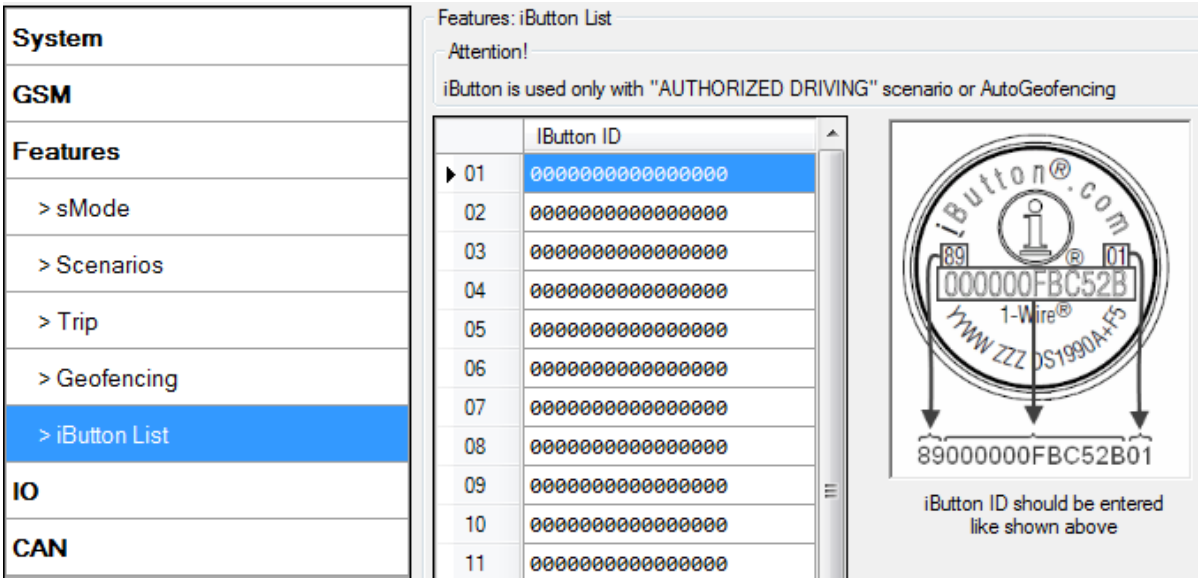

Figure 35 Features->iButton Configuration

iButton value must be entered as it is written on it.

6.3.1.4 I/O

If all I/O elements are disabled AVL packet comes with GPS information only. After enabling I/O element(s) AVL packet in couple with GPS information contains current value(s) of enabled I/O element.

6.3.1.4.1 FM5300 available I/O list

Table 9 PERMANENT I/O elements list description

Permanent I/O elements (are always sent (with every record) to server if enabled)			
Nr.	Property Name	Bytes	Description
1	Digital Input Status 1	1	Logic: 0 / 1
2	Digital Input Status 2	1	Logic: 0 / 1
3	Digital Input Status 3	1	Logic: 0 / 1
4	Digital Input Status 4	1	Logic: 0 / 1
5	Analog Input 1	2	Voltage: mV, 0 – 30 V
6	Analog Input 2	2	Voltage: mV, 0 – 30 V
7	Analog Input 3	2	Voltage: mV, 0 – 30 V
8	Analog Input 4	2	Voltage: mV, 0 – 30 V
9	GSM signal level	1	Value in scale 1 – 5
10	Actual profile	1	Value in scale 1 – 4
11	Speedometer	2	Value in km/h, 0 – xxx km/h
12	External Power Voltage	2	Voltage: mV, 0 – 30 V
13	Internal Battery Voltage	2	Voltage: mV

Permanent I/O elements (are always sent (with every record) to server if enabled)			
Nr.	Property Name	Bytes	Description
14	Internal Battery Current	2	Voltage: mA
15	PCB Temperature	4	10 * Degrees (°C)
16	GNSS status	1	0-off/ 1-no antenna (only when using NAVYS)/ 2- no fix/ 3-got fix/ 4-sleep/ 5-over current
17	Dallas Temperature 1	4	10 * Degrees (°C), -55 - +115, if 3000 – Dallas error
18	Dallas Temperature 2	4	10 * Degrees (°C), -55 - +115, if 3000 – Dallas error
19	Dallas Temperature 3	4	10 * Degrees (°C), -55 - +115, if 3000 – Dallas error
20	Fuel Counter	4	Difference of generated impulses on two signal lines
21	iButton ID	8	iButton ID number
22	GPS PDOP	2	Probability * 10; 0-500
23	GPS HDOP	2	Probability * 10; 0-500
24	Odometer	4	Distance between two records: m
25	Deep Sleep	1	0 – not deep sleep mode, 1 – deep sleep mode
26	Cell ID	2	GSM base station ID
27	Area Code	2	Location Area code (LAC), it depends on GSM operator. It provides unique number which assigned to a set of base GSM stations. Max value: 65536
28	Movement	1	0 – not moving, 1 – moving.
29	Current Operator Code	4	Currently used GSM Operator code
30	Fuel level meter 1	2	Fuel level, measured by LLS sensor on COM1, in kvants or liters.
31	Fuel temperature 1	1	Fuel temperature, measured by LLS sensor on COM1, in degrees Celsius.
32	Fuel level meter 2	2	Fuel level, measured by LLS sensor on COM2, in kvants or liters.
33	Fuel temperature 2	1	Fuel temperature, measured by LLS sensor on COM2, in degrees Celsius.
34	RFID ID	8	Read RFID value, depending on RFID mode, values can be: for RFID mode in hexadecimal format, RFID M7 mode in decimal format.

Table 10 EVENTUAL I/O elements list description

Eventual IO elements (generated and sent record to server only if appropriate conditions are met)			
Nr.	Property Name	Bytes	Description
39	CAN 0	Varying[4]	ID Specific data
40	CAN 1	Varying	ID Specific data
41	CAN 2	Varying	ID Specific data
42	CAN 3	Varying	ID Specific data
43	CAN 4	Varying	ID Specific data
44	CAN 5	Varying	ID Specific data
45	CAN 6	Varying	ID Specific data

[4] CAN property length can vary depending on filter settings. Data can be sent as 1, 2, 4 or 8 byte property.

Eventual IO elements (generated and sent record to server only if appropriate conditions are met)			
Nr.	Property Name	Bytes	Description
46	CAN 7	Varying	ID Specific data
47	CAN 8	Varying	ID Specific data
48	CAN 9	Varying	ID Specific data
49	Geofence zone 01	1	Event: 0 – target left zone, 1 – target entered zone
50	Geofence zone 02	1	Event: 0 – target left zone, 1 – target entered zone
51	Geofence zone 03	1	Event: 0 – target left zone, 1 – target entered zone
52	Geofence zone 04	1	Event: 0 – target left zone, 1 – target entered zone
53	Geofence zone 05	1	Event: 0 – target left zone, 1 – target entered zone
54	Geofence zone 06	1	Event: 0 – target left zone, 1 – target entered zone
55	Geofence zone 07	1	Event: 0 – target left zone, 1 – target entered zone
56	Geofence zone 08	1	Event: 0 – target left zone, 1 – target entered zone
57	Geofence zone 09	1	Event: 0 – target left zone, 1 – target entered zone
58	Geofence zone 10	1	Event: 0 – target left zone, 1 – target entered zone
59	Geofence zone 11	1	Event: 0 – target left zone, 1 – target entered zone
60	Geofence zone 12	1	Event: 0 – target left zone, 1 – target entered zone
61	Geofence zone 13	1	Event: 0 – target left zone, 1 – target entered zone
62	Geofence zone 14	1	Event: 0 – target left zone, 1 – target entered zone
63	Geofence zone 15	1	Event: 0 – target left zone, 1 – target entered zone
64	Geofence zone 16	1	Event: 0 – target left zone, 1 – target entered zone
65	Geofence zone 17	1	Event: 0 – target left zone, 1 – target entered zone
66	Geofence zone 18	1	Event: 0 – target left zone, 1 – target entered zone
67	Geofence zone 19	1	Event: 0 – target left zone, 1 – target entered zone
68	Geofence zone 20	1	Event: 0 – target left zone, 1 – target entered zone
69	Auto Geofence	1	Event: 0 – target left zone, 1 – target entered zone
70	Trip	1	1 – trip start, 0 – trip stop
71	Immobilizer	1	1 – iButton connected
72	Authorized driving	1	1 – authorized iButton connected
73	ECO driving/Green driving type	1	1 – harsh acceleration, 2 – harsh braking, 3 – harsh cornering
74	ECO driving/Green driving value	1	Depending on ECO driving/Green driving type: if harsh acceleration, braking and cornering – g*10 m/s^2
75	Over Speeding	1	At over speeding start km/h, at over speeding end km/h

There are two types of operations with Permanent I/O elements: simple monitoring and event generating. Monitoring method is used when current I/O information needed with regular GPS coordinates. Event generating method is used when additional AVL packet is needed when current value of I/O exceeds predefined High and Low levels. I/O settings allow defining I/O event criteria.

6.3.1.4.2 I/O configuring

I/O configuration has 8 main parts (Figure 36):

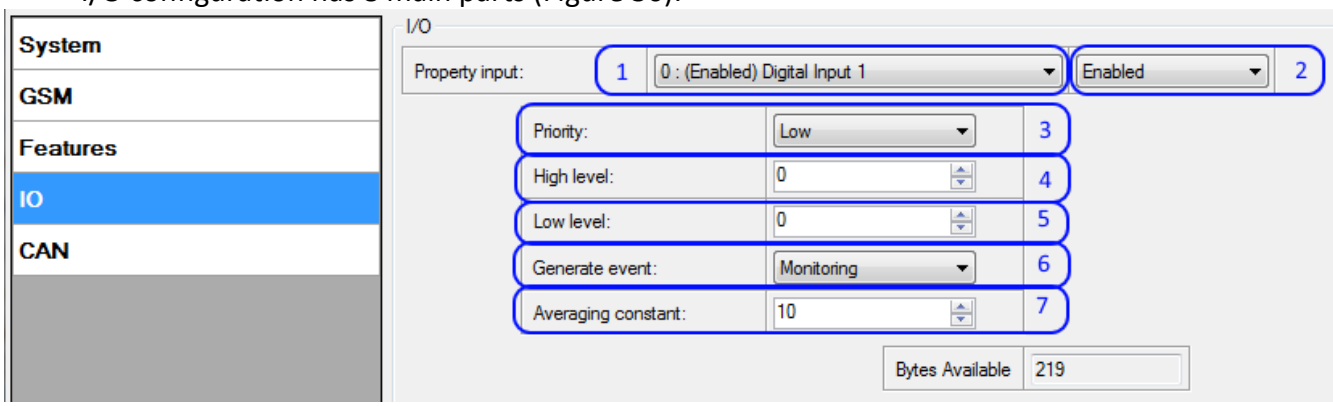

Figure 36 FM53 I/O Configuration (1)

Table 11 I/O Configuration window description

Pos. Nr.	DESCRIPTION
1.	Property inputs list
2.	Enable/Disable chosen property input – allows enabling I/O element so it is added to the data packet and is sent to the server. By default, all I/O elements are disabled and FM5300 records only GPS information. It is also possible to set CAN message instead of any I/O element – this way CAN element will be sent to the server instead of chosen element. See CAN description below for more details (see chapter 11.26).
3.	Priority – AVL packet priority. There are Low, High, Panic, SW21, SW22, SW23 and SW24 priorities. Regular packets are sent as Low priority records. When low priority event is triggered, FM5300 makes additional record with indication that the reason for that was I/O element change. When High priority is selected, module makes additional record with high priority flag and sends event packet immediately to the server. First it tries to send it using GPRS. If GPRS fails, it doesn't send AVL packet using SMS mode, if SMS is enabled in SMS settings. Panic priority event forces module to send AVL packet to server via GPRS and if GPRS fails, it sends AVL packet using SMS mode, if SMS is enabled in SMS settings. Then it switches its operating profile to Profile 4 (for details see chapter 7.2). SW2X priorities switch profiles on event (SW21 – Profile 1, SW22 – Profile 2 and so on).
4.	High Level – define I/O value range. If I/O value enters or exits this range, FM5300 generates event.
5.	Low Level – define I/O value range. If I/O value enters or exits this range, FM5300 generates event.
6.	Generate event – defines when to generate event. When value enters defined range, exits it or both enters and exits.
7.	Averaging Constant – it is an I/O event delay parameter. In some applications there is no need to generate events on every I/O range enter/exit immediately. Sometimes it is necessary to wait some time interval before event generating to be ensuring that current event is not a short time event. Averaging constant allows setting I/O event delay (averaging). If I/O value is entering or leaving predefined range, it must have same

Pos. Nr.	DESCRIPTION
	value for Averaging constant time. One unit of averaging constant value equals 20 milliseconds. Selected data source value input averaging constant are calculated by following formula: $$VAL^{Mean} = \frac{VAL^{Mean-1} \times (CONST - 1) + REALVAL}{CONST}$$ Where: VAL^{Mean} – Value calculated during actual cycle[5]; VAL^{Mean-1} – Value calculated during previous cycle; CONST – Averaging constant; REALVAL – Real value detected on digital input.

6.3.1.4.3 I/O properties

I/O properties are additional data sources, which are recorded along with usual GPS data.
I/O#0 property parameter (ID=300)
Parameter defines I/O property value. Possible values are given below.

Table 12 I/O Parameter Values

0	1
Disabled	Enabled

If value is 'CAN', then CAN data is automatically added to this property.

Table 13 I/O Property Parameter Values

Minimum value	Maximum value	Recommended value	Goes with (depends on) parameters	Value type
0	11	-	I/O#0 priority (ID=301) I/O#0 High level (ID=302) I/O#0 Low level (ID=303) I/O#0 logic operand (ID=304) I/O#0 averaging constant (ID=305)	S8

I/O#0 priority (ID=301)
Parameter defines I/O property type of priority: 0 is low, 1 – high, 2 – panic, 3 – empty, 4 – SW21, 5 – SW22, 6 – SW23, 7 –SW24.

Table 14 I/O Type of Priority

Minimum value	Maximum value	Recommended value	Goes with (depends on) parameters	Value type
0	7 (exl. 3)	0	I/O#0 High level (ID=302)	S8

[5] One cycle equal to 20 ms.

			I/O#0 Low level (ID=303) I/O#0 logic operand (ID=304) I/O#0 averaging constant (ID=305)	

I/O#0 High level (ID=302)

Parameter defines high value of triggered I/O property. This parameter is used to set thresholds for I/O properties to generate events.

Table 15 I/O High Value

Minimum value	Maximum value	Recommended value	Goes with (depends on) parameters	Value type
-2147483647	2147483647	1	I/O#0 priority (ID=301) I/O#0 Low level (ID=303) I/O#0 logic operand (ID=304) I/O#0 averaging constant (ID=305)	S32

I/O#0 Low level (ID=303)

Parameter defines low value of triggered I/O property. This parameter is used to set thresholds for I/O properties to generate events.

Table 16 I/O Low Value

Minimum value	Maximum value	Recommended value	Goes with (depends on) parameters	Value type
-2147483647	2147483647	0	I/O#0 priority (ID=301) I/O#0 High level (ID=302) I/O#0 logic operand (ID=304) I/O#0 averaging constant (ID=305)	S32

I/O#0 logic operand (ID=304)

Parameter defines when event is sent: 0 is event on exit, 1 – on entrance, 2 – on both, 3 – monitoring, 4 – hysteresis, 5 – on change.

Table 17 I/O Logic Operand

Minimal value	Maximum value	Recommended value	Goes with (depends on) parameters	Value type
0	5	2	I/O#0 priority (ID=301) I/O#0 High level (ID=302) I/O#0 Low level (ID=303) I/O#0 averaging constant (ID=305) I/O#0 property parameter (ID=300)	S8

I/O#0 averaging constant (ID=305)

Parameter defines I/O property sample length to average. If no averaging needed default value is 1.

Table 18 I/O Averaging constant

Minimum value	Maximum value	Recommended value	Goes with (depends on) parameters	Value type
1	2147483647	1	I/O#0 property parameter (ID=300) I/O#0 priority (ID=301) I/O#0 High level (ID=302) I/O#0 Low level (ID=303) I/O#0 logic operand (ID=304)	S32

Other I/O property elements can be configured in the same logic. All I/O element parameters are listed below.

Table 19 I/O Elements

I/O Element Number	I/O element parameters	I/O Element Number	I/O element parameters
I/O#0 – Digital input 1	300 – 305	I/O#17 – Ext. Voltage	470 – 475
I/O#1 – Digital input 2	310 – 315	I/O#18 – GNSS Status	480 – 485
I/O#2 – Digital input 3	320 – 325	I/O#19 – Movement	490 – 495
I/O#3 – Digital input 4	330 – 335	I/O#20 – Odometer	500 – 505
I/O#4 – Analog input 1	340 – 345	I/O#21 – GSM Operator	510 – 515
I/O#5 – Analog input 2	350 – 355	I/O#22 – Speedometer	520 – 525
I/O#6 – Analog input 3	360 – 365	I/O#23 – iButton ID	530 – 535
I/O#7 – Analog input 4	370 – 375	I/O#24 – GSM Signal	540 – 545
I/O#8 – Current Profile	380 – 385	I/O#25 – Deep Sleep	550 – 555
I/O#9 – Battery voltage	390 – 395	I/O#26 – Cell ID	560 – 565
I/O#10 – Battery Current	400 – 405	I/O#27 – Area Code	570 – 575
I/O#11 – Fuel level meter 1	410 – 415	I/O#28 – PCB Temp.	580 – 585
I/O#12 – Fuel temperature 1	420 – 425	I/O#29 – Dallas Temp. 1	590 – 595
I/O#13 – Fuel level meter 2	430 – 435	I/O#30 – Dallas Temp. 2	600 – 605
I/O#14 – Fuel temperature 2	440 – 445	I/O#31 – Dallas Temp. 3	610 – 615
I/O#15 – GPS PDOP	450 – 455	I/O#32 – Fuel Counter	620 – 625
I/O#16 – GPS HDOP	460 – 465	I/O#33 – RFID ID	630 – 635

6.3.1.5 CAN

CAN – Controller Area Network (CAN or CAN-bus) is a computer network protocol and bus standard designed to allow microcontrollers and devices to communicate with each other and without a host computer (see chapter 12).

6.3.1.5.1 CAN interface parameters

CAN Baud Rate (ID=760)

Parameter defines CAN bus baud rate. For Auto Baud rate ID=760 value is 0. Available baud rates are 50, 100, 125, 250, 500 and 1000 kbps.

Table 20 CAN Baud Rate

Minimum value	Maximum value	Recommended value	Goes with (depends on) parameters	Value type
0	1000	125	CAN#0 CAN Type ID (ID=770) CAN#0 Output data mask (ID=771) CAN#0 CAN ID (ID=772) CAN#0 Enable\Disable (ID=773)	U32

CAN#0 CAN Type ID (ID=770)

Parameter defines CAN element ID length. CAN element ID could be 11 or 29 bits length. For 11 bits ID parameter value is 0, for 29 bits ID – 1.

Table 21 CAN Type ID

Minimum value	Maximum value	Recommended value	Goes with (depends on) parameters	Value type
0	1	1	CAN#0 Output data mask (ID=771) CAN#0 CAN ID (ID=772)	U8

CAN#0 Output data mask (ID=771)

Parameter defines CAN data mask. This parameter is 8 bit length and indicates which data bytes of CAN message are sent for calculation and which are ignored. Bit value 1 means that CAN data byte will be preceded ant sent to server.

Example: 00110011 is 51 integer.

Table 22 Output data mask

Minimum value	Maximum value	Recommended value	Goes with (depends on) parameters	Value type
0	FF	-	CAN#0 CAN Type ID (ID=770) CAN#0 CAN ID (ID=772)	U8

CAN#0 CAN ID (ID=772)

Parameter defines CAN identifier. ID can be 11 or 29 bits length.

Example: 18FEE925 (total fuel used)

Table 23 CAN ID

Minimum value	Maximum value	Recommended value	Goes with (depends on) parameters	Value type
0	FFFFFFFF	-	CAN#0 CAN Type ID (ID=770) CAN#0 Output data mask (ID=771)	U32

The rest CAN elements are configured in the same sequence. CAN elements and parameters ID's are listed below.

Table 24 CAN elements and parameters

CAN Element Number	CAN Element parameters
CAN#0	770 – 773
CAN#1	780 – 783
CAN#2	790 – 793
CAN#3	800 – 803
CAN#4	810 – 813
CAN#5	820-823
CAN#6	830-833
CAN#7	840-843
CAN#8	850-853
CAN#8	860-863

There are only 14 I/O parameters that could use Averaging Constant:
Digital Inputs (1-4); Analog Inputs (1-4); Battery Voltage; Battery Current; External Voltage; PDOP; HDOP; Speedometer.
I/O parameters: "Current Profile", "Fuel level meter" (1-2), "Fuel temperature" (1-2), "GNSS Status", "Movement", "Active GSM Operator", "iButton ID", "Odometer", "GSM Signal", "Deep Sleep", "Cell ID", "Area Code", "PCB Temperature", "Dallas temperature Sensor 0..2", "Fuel Counter" and "RFID ID" cannot use Averaging constant functionality.

6.3.1.6 Configurable parameter values and Global parameter values

6.3.1.6.1 Configurable parameters

Table 25 Configurable parameter values

Parameter	ID	Parameter value				Value type
		MIN	MAX	Default	Recommended	
System parameters (chapter 6.3.1.1)						
Sleep Mode (0 –	000	0	2	0	-	U8

disable, 1 – enable, 2 – Deep Sleep)						
Sleep Timeout	001	0	9000	1	-	U16
Data Acquisition parameters (chapter 8)						
Min Period (in seconds)	011	0	9999999	600	-	U32
Min Distance (in meters)	012	0	65535	0	-	U32
Min Angle (in degrees)	013	0	180	0	-	U16
Min Saved Records	014	1	25	10	1	U8
Min Send Period (in seconds)	015	0	9999999	600	-	U32
GPRS Week Time	016	-	-	-	-	-
Geofencing parameters (chapter 6.3.1.3.4.1)						
Frame Border (in meters)	020	0	9999999	1	1000	U32
Zone #1 Shape	030	0 (Circle)	1 (Rectangle)	0	-	U32
Zone #1 Priority (0 – Low, 1 – High, 2 – Panic, 4, 5, 6, 7 – SW21, SW22, SW23, SW24)	031	0	7 (exl. 3)	0	-	U8
Zone #1 Generate Event (0 – no event, 1 – on enter, 2 – on exit, 3 – on both)	032	0	3	0	-	U8
Zone #1 Longitude X1 (Rectangle) / X (Circle)	033	-180	180	0	-	Float
		-180	180	0	-	Float
Zone #1 Latitude Y1 (Rectangle) / Y (Circle)	034	-90	90	0	-	Float
		-90	90	0	-	Float
Zone #1 Longitude X2 (Rectangle) / R (Circle)	035	-180	180	0	-	Float
		0	180 / 9999999.99	0	0	Float
Zone #1 Latitude Y2 (Rectangle) / None (Circle)	036	-90	90	0	-	Float
		-	-	-	-	-
AutoGeofencing parameters (chapter 6.3.1.3.4.2)						
Deactivate By	290	0 (Ignition)	1 (iButton)	0	-	U8
Enable/Disable	291	0 (Disable)	1 (Enable)	0	1	U8
Activation Timeout (in seconds)	292	0	65535	60	60	U16
Priority (0 – Low, 1 – High, 2 – Panic, 4, 5, 6, 7 – SW21, SW22,	293	0	7 (exl. 3)	1	1	U8

SW23, SW24)						
Event Generating (0 – no event, 1 – on enter, 2 – on exit, 3 – on both)	294	0	3	0	2	U8
Radius (in meters)	295	0	9999999	100	100	U32
iButton List (chapter 6.3.1.3.5)						
Authorized iButtons	710-759	0	FFFFFFFF FFFFFFFF		-	U64
Features parameters (chapter 5.7)						
Ignition source	900	0	1	0	-	U8
High Level (for Ignition)	901	0	30000	0	-	U16
Low Level (for Ignition)	902	0	30000	0	-	U16
Digital Output No.1 Usage Scenarios (0 – disable, 1 – ECO driving, 2 – Green driving)	910	0	2	0	-	U8
Max Allowed Speed	911	0	350	90	-	U16
Max Acceleration Force	912	0	255	22	25	Float
Max Braking Force	913	0	255	25	35	Float
Max Cornering Force	914	0	255	21	-	Float
Acceleration Active Output Duration	918	0	10	1	-	-
Breaking Active Output Duration	919	0	10	1	-	-
Cornering Active Output Duration	920	0	10	1	-	-
Digital Output No.2 usage scenarios	921	0	2	0	-	U8
OverSpeeding (0 – disable, 1 – enable)	922	0	1	0	-	U8
Trip Start/Stop Detection (0 – disable, 1 – enable)	280	0	1	1	-	U8
Start Speed	281	0	255	5	-	U8
Ignition Off Timeout	282	0	65536	60	-	U16
Trip Continuous Distance Counting (0 – not, 1 – continuous)	283	0	1	0	-	U8
Manual CAN						
Can Baud rate	760	50	1000	0	Autobaud(0)	-
CAN mode	761	0	1	0	-	-

CAN						
Type (0 – standard ID, 1 – extended ID)	770 - 860	0	1	1	-	-
Output mask	771-861	1	255	0	-	-
CAN ID	772 - 862	4 byte hexadecimal number	4 byte hexadecimal number	0	-	-
CAN Enable/Disable	773 - 863	0	1	0	-	-
Auto CAN						
Enable/Disable Auto CAN	20990	0	1	0	-	-
GSM parameters (chapter 6.3.1.2)						
Server Response Timeout	230	5	300	5	-	U16
GPRS Content Activation (0 – disable, 1 – enable)	240	0	1	0	-	S8
APN Name	242	Empty	32 char	Empty	-	S8[32]
APN username	243	Empty	30 char	Empty	-	S8[30]
APN Password	244	Empty	30 char	Empty	-	S8[30]
Domain	245	Empty	56 char	Empty	-	-
Target Server Port	246	0	65535	0	-	U16
Protocol (0 – TCP, 1 – UDP)	247	0	1	0	-	U8
Max Upload in Home	236	10	10000	100	-	-
Home - Send SMS to number	238	0	10	0	-	-
Max Upload in Roaming	237	10	1000	10	-	-
Roaming - Send SMS to number	239	0	10	0	-	-
SMS data sending settings (0 – disable, 1 – enable)	250	0	1	0	-	S8
SMS Login	252	Empty	5 char	Empty	-	S8[5]
SMS Password	253	Empty	5 char	Empty	-	S8[5]
Authorized phone numbers	260-269	Empty	16 char	Empty	-	S8[17]
Operator Code	271	0	99999999	0	-	U32
SMS Data send week time schedule	273	Binary decoding	Binary decoding	-	-	20 byte array

6.3.1.6.2 Global parameters

Table 26 Global parameters values

Parameter	ID	Possible Parameter Value	Default Value
Profile Change On Event	100	0/1 (0 – disable, 1 – enable)	0
Microphone Level	101	0 – 14 (14 – highest)	10
Speaker Level	102	0 – 100 (100 – highest)	20
Call Number	103	Up To 17 Char	Empty
Call Trigger	104	0/2/3/4 (0 – disabled, 2,3,4 – DIN2, DIN3, DIN4)	0
Analog Input 1-2 Type	105	0/1 (0 – 10 V, 1 – 30 V)	10
Analog Input 3-4 Type	106	0/1 (0 – 10 V, 1 – 30 V)	10
Static Navigation On/Off	107	0/1 (0 – disable, 1 – enable)	0
Records Sorting	108	0/1 (0 – from newest, 1 – from oldest)	0
Active Data Link Timeout	109	0 – 259200 (time in seconds)	5
Ringtone Parameter	110	1 – 10 (number = corresponding ringtone)	1
Accelerometer Filter Start Value	112	1 – 10 (time in seconds)	1
Accelerometer Filter Stop Value	113	1 – 255 (time in seconds)	200
Continious Odometer	114	0/1 (0 – disable, 1 – enable)	0
Odometer Start Value	115	1 – 4294967295	0
GNSS Satellite System	116	0/1/2/3/4 (0 – all available, 1 – GPS, 2 – GLONASS, 3 – GNSS (all available) + SBAS, 4 – GPS + SBAS)	0
Garmin Ping	117	0/1 (0 – disable, 1 – enable)	0
Garmin Unicode	118	0/1 (0 – disable, 1 – enable)	1
COM1 Baudrate	119	9600 – 256000	115200
COM1 Mode	120	1 – 255 (5 – Silent, 13 – FM Log, 97 – LLS, 98 – LCD, 99 – RFID, 100 – RFID M7, 101 – Garmin, 161 – COM TCP Link, 177 – COM TCP Link (binary), 200-203 – Reserved 1-4)	5
DUAL LLS mode selection	121	0/1 (0 – disable, 1 – enable)	1
COM2 Baudrate	122	0 – 115200	115200
COM2 Parity	123	0/1/2 (0 – none, 1 – even, 2 – odd)	0
COM2 Mode	124	0 – 255 (5 – Silent, 13 – FM Log, 15 – NMEA, 97 – LLS, 98 – LCD, 99 – RFID, 100 – RFID M7, 101 – Garmin, 161 – COM TCP Link, 177 – COM TCP Link (binary), 200-203 – Reserved 1-4)	5
Backup Mode	125	0/1 (0 – disable, 1 – enable)	0
COM2 Binary TMO	126	1 – 255	10
COM2 Prefix1	127	0 – 255	0

COM2 Prefix2	128	0 – 255	0
COM2 Prefix3	129	0 – 255	0
Auto Answer	130	1 – 10 (number of rings)	3
Idling control	131	0/1 (0 – disable, 1 – enable)	1
State idle=1 speed	132	0 – 90 (Speed km/h)	16
State idle=1 time	133	180 – 900 (time in seconds)	180
State idle=0 speed	134	1 – 300 (Speed km/h)	20
State idle=0 time	135	1 – 900 (time in seconds)	1
Dallas temp Sensor 0 ID	140	Up To 16 Char (FW)	0
Dallas temp Sensor 1 ID	141	Up To 16 Char (FW)	0
Dallas temp Sensor 2 ID	142	Up To 16 Char (FW)	0
lls1_poly_a0	143	all float range	0.0
lls1_poly_a1	144	all float range	1.0
lls1_poly_a2	145	all float range	0.0
lls1_poly_a3	146	all float range	0.0
lls1_poly_a4	147	all float range	0.0
lls1_poly_a5	148	all float range	0.0
lls2_poly_a0	149	all float range	0.0
lls2_poly_a1	150	all float range	1.0
lls2_poly_a2	151	all float range	0.0
lls2_poly_a3	152	all float range	0.0
lls2_poly_a4	153	all float range	0.0
lls2_poly_a5	154	all float range	0.0
Network Ping Timeout	155	0 – 30 (time in minutes)	5*
Data saving without time synchronization	157	0/1 (0 – disable, 1 – enable)	0

* From firmware version 01.07.60.Rev:01, network ping timeout default value – 0

6.3.1.7 Read Records* (* new functionality available with FM5300M version)

When the FM5300M is working in offline mode, it can save over 45,000 records. Since these records are not sent to the server, they can be downloaded directly to computer using USB connection. When FM5300 connected to configurator appears additional option “Read Records” (Figure 30).

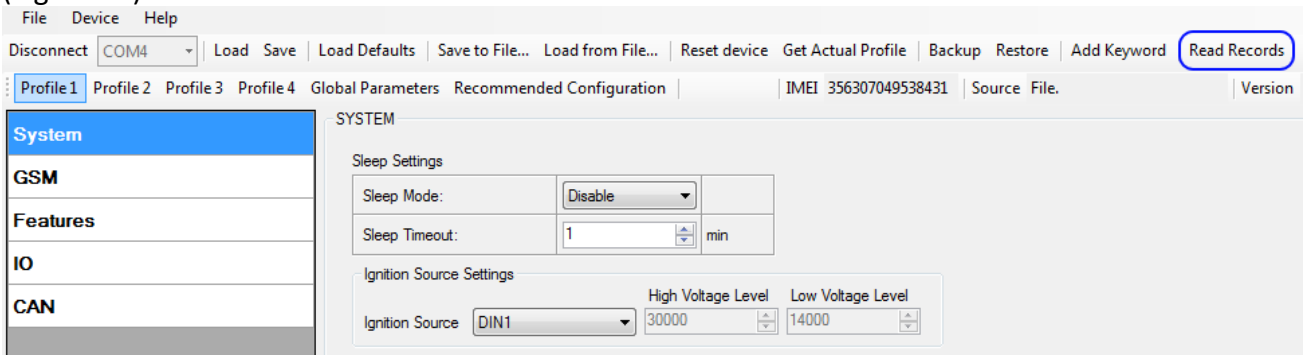

Figure 37 FM53XX Configurator window with FM53M connected

After device is switched on, you have to wait 3 minutes for device to startup. Only then it is possible to download records. If the memory is fully filled, reading may take several minutes. All records are deleted from device's memory after reading. Data is stored in a binary file on PC. Records could be uploaded from file to TAVL server and access all the data from TAVL application.

ATTENTION! New functionality is available only with FM53M version. Check for correct version on your FM53M sticker as it is shown below (Figure 38). In the lower right corner has to be M symbol indicating FM53M version.

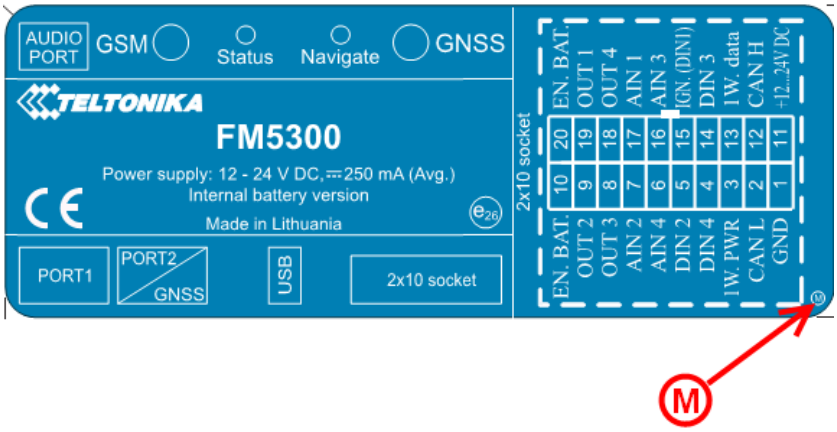

Figure 38 FM53M sticker

TAVL client application lets user to use the following features:

- Import data file saved from the device to the TAVL;
- Preview track of the imported data;
- Generate reports based on imported data.

More details on how to use TAVL application please refer to "TAVL manual v1.5" documentation or its latest versions.

FM53M version can be still used as a standard FM53. It can be configured to acquire and send data to server. It will be possible to store up to 47,615 data records if GSM is not available at the moment. It will send data later when GPRS is available again. Note that FM53M can have memory full of records. In such a case it will start deleting oldest records in order to save new ones. Sending all the data records to server may take some time.

7 PROFILE SWITCHING

FM5300 has 4 profiles saved in Flash memory of the module. Every profile has a list of parameters, which enables FM5300 to operate in different modes while using different profiles. The easiest way to understand what is a profile is to compare it to a list of instructions that are written for different cases. You are allowed to setup up to 4 different module behaviours. Global parameters contain settings that are common for all 4 profiles. This means that if you set FM5300 to call to a predefined number, you will be able to call it while using any profile. Basic scheme of Global parameters and profiles is shown below. According to the scheme, every profile has a list of parameters. Global parameters are common for all profiles. (Figure 39)

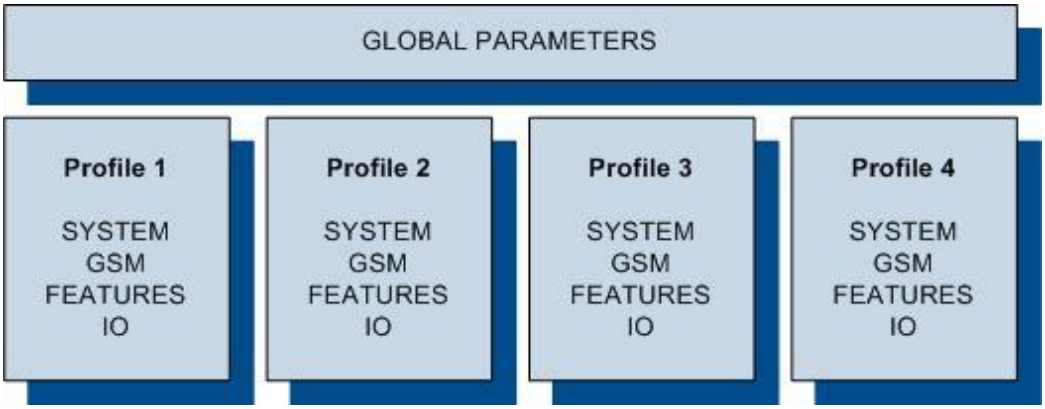

Figure 39 FM5300 profile structure

Switching between profiles (changing behaviour) can be performed by Profile switch depending on GSM operator code (mostly used for roaming applications), or by Profile switch depending on I/O event (on I/O value changing).

Profile 3 is default profile for FM5300. It is always loaded on the very first start-up and further profile switching is proceeded after operator scan or I/O element changes (although device remembers which profile it used after that).

7.1 Profile Switching dependence on GSM Operator

GSM Operator code profile switching is mostly used in roaming applications, when the purpose is to have information from module both from Home and Roaming operator network for a reasonable price. This method allows you to define different module behaviour in Home network, Roaming network and unknown operator areas. See figure below for details.

Profile 1 is configured for home network. Data acquisition and send intervals are quite frequent here. To make profile use effective, it is wise to set more optimized parameters in roaming profile (Profile 2) – this usually includes larger coordinate recording intervals, packets with greater number of coordinates sending, and in some cases GPRS context available only for a certain time interval. Profile 3 can either contain operator codes (rarely used) or have an empty

list. Profile 4 is not used (profile 4 can only be used when FM5300 encounters a ‘panic’ priority event (see 7.2 chapter)).

In the example (Figure 40) FM5300 connects to operator with code 24702. It checks profile 1 operator list, but there is only one operator code entered which does not mach. Then it checks profile 2 operators list. This code is entered there, so FM5300 switches to profile 2.

If there are no operator codes entered in all profiles after operator search task FM5300 will check all 3 profiles and won’t find any operators in any list. In such a case, FM5300 will switch to profile 3. Note that before switching to profile 3, the device closes the GPRS session.

Operator search is performed every 15 minutes. If no operators are entered in any profile it can have influence on GPRS sessions. IF GPRS sessions are attaching/detaching every 15 minutes it means configuration of FM5300 is performed incorrectly.

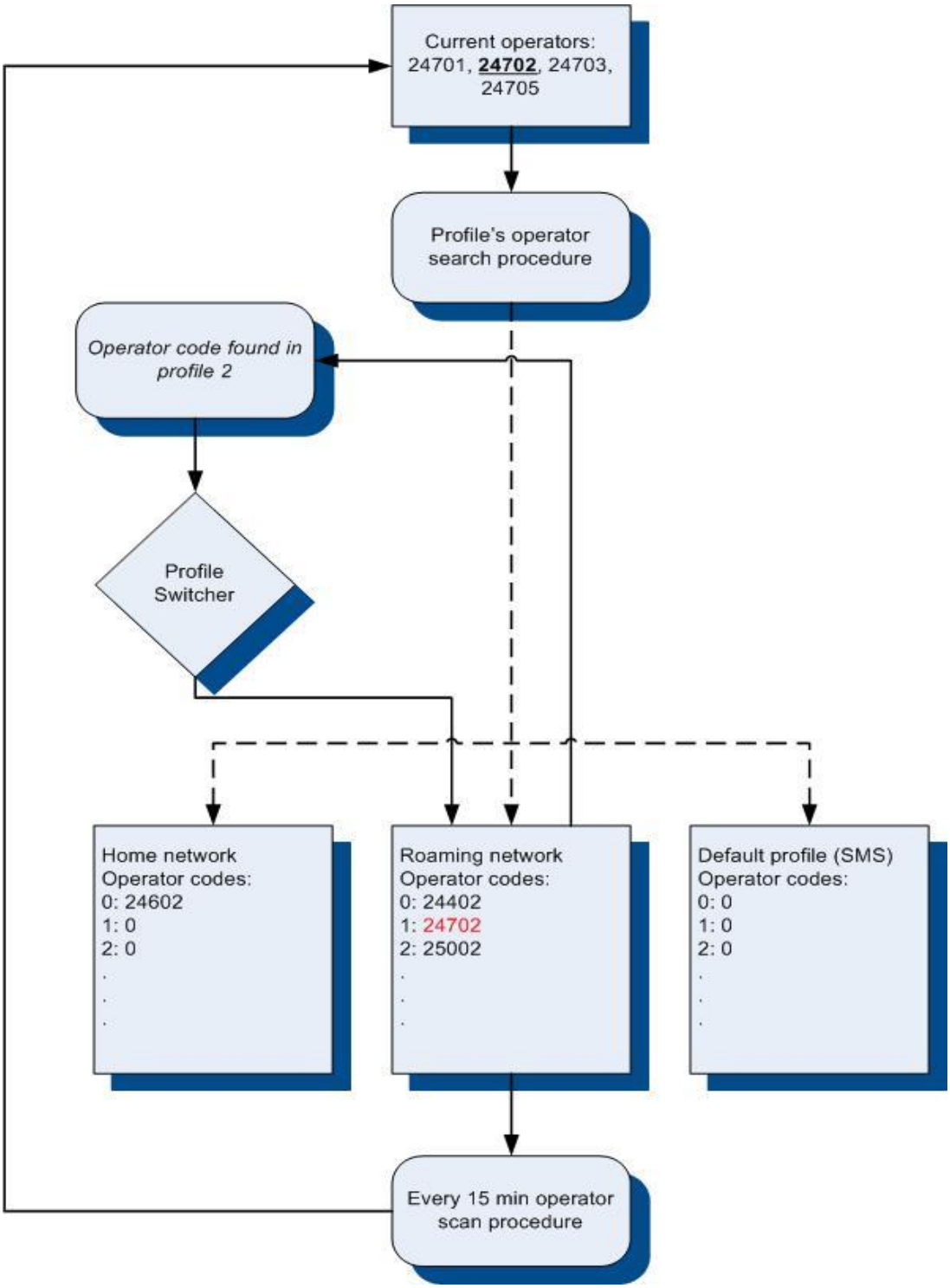

Figure 40 GSM Operator code profile switching (…)

7.2 Profile switching dependence on I/O event

Another profile switch method is based on I/O event. Events happen when the value of enabled I/O intersects thresholds (enter, exit, on both, hysteresis) predefined by High and Low level thresholds. SW21, SW22, SW23, SW24 stands for “Switch to profile No. X”. After an event happens, FM5300 switches to a defined profile. Using profile switching you can create smart applications. SW2X actions can be performed only if “Profile change on event” is enabled in Global parameters. Pictures below illustrate profile switching depending on digital events:

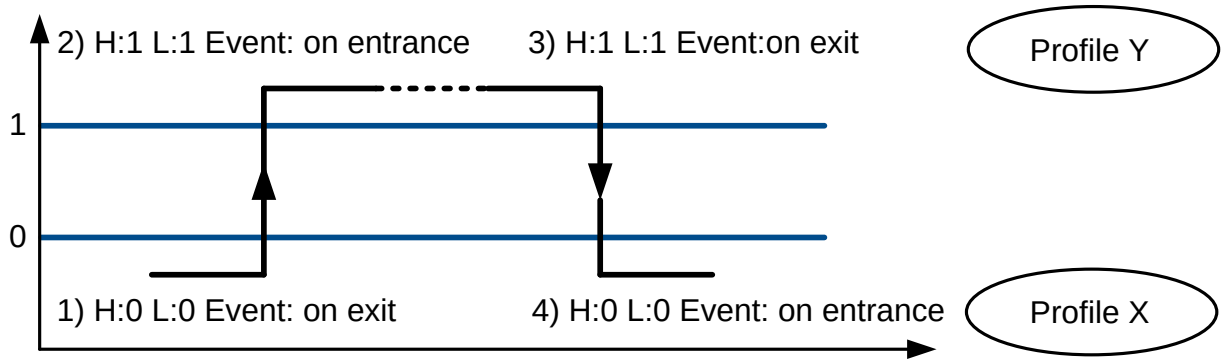

Figure 41 Digital input event criteria

Example #1

Configuration of Profile1 to switch to Profile2 on DIN1 value change from 0 to 1:

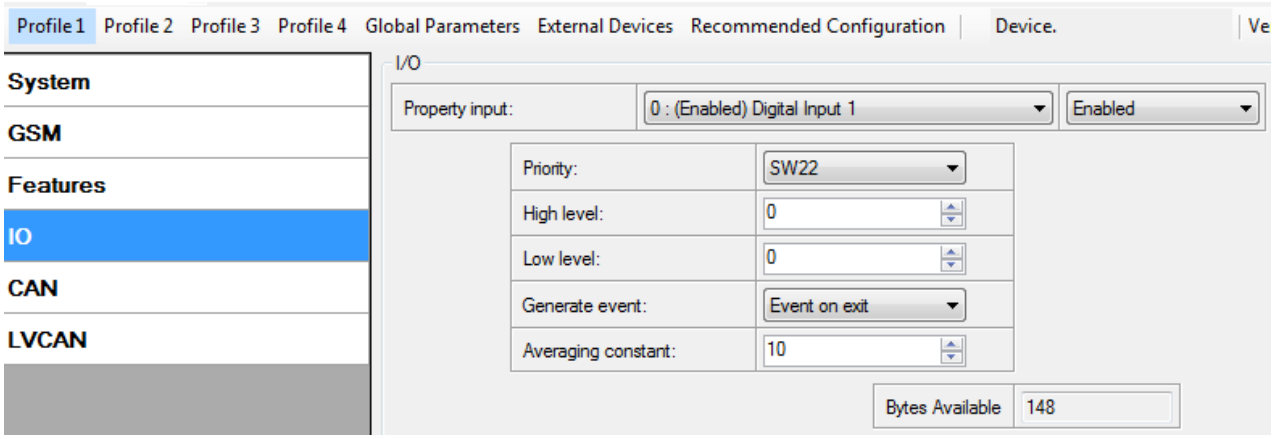

Figure 42 Switch to profile on event (1)

Example #2

Configuration of Profile2 to switch to Profile1 on DIN1 value change from 1 to 0:

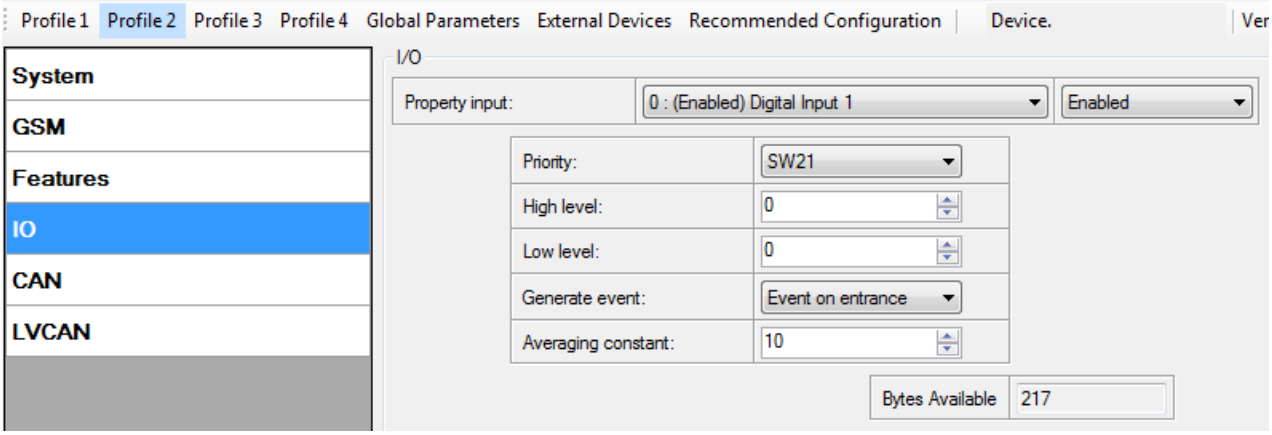

Figure 43 Switch to profile on event (2)

8 DATA ACQUISITION

Data can be acquired using GPS or I/O elements. GPS data is for basic vehicle tracking, data acquisition by I/O elements gives more specific information.

8.1 GPS data acquisition

There are three ways of GPS data acquisition which are configured in *Features > sMode* menu (Figure 44).

Device checks angle, distance and time differences with last saved record. If differences are greater than configured a record is generated. Checking sequence: first angle is checked then distance and last – time differences.

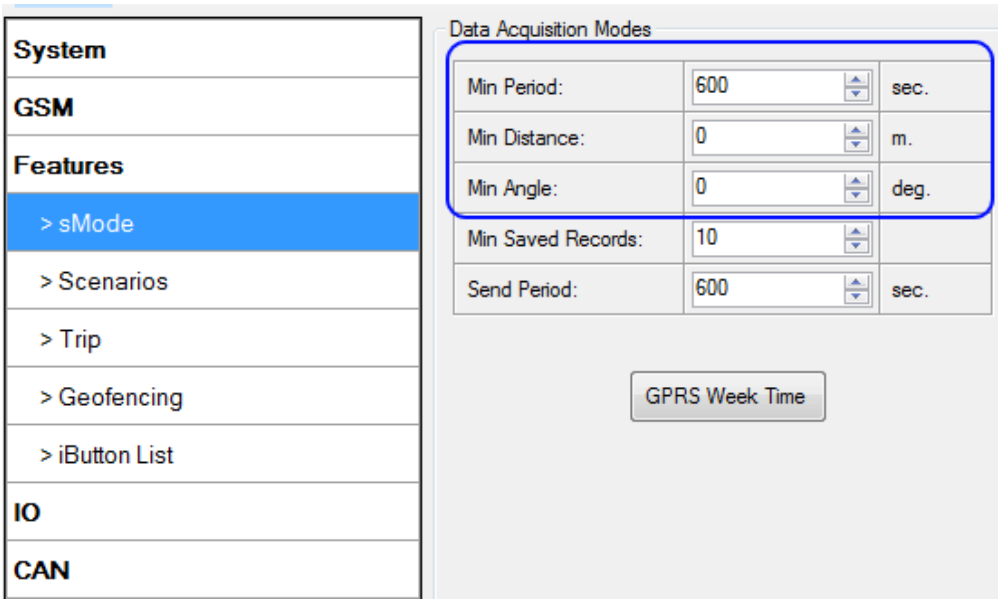

Figure 44 GPS acquisition configuration window

Actual configuration parameters are marked in blue.

Min. Period

Time based data acquiring (Figure Figure **45**) – records are being acquired every time when defined interval of time passes. Entering zero means that data will not be recorded according to time. This method is suitable best for basic position update.

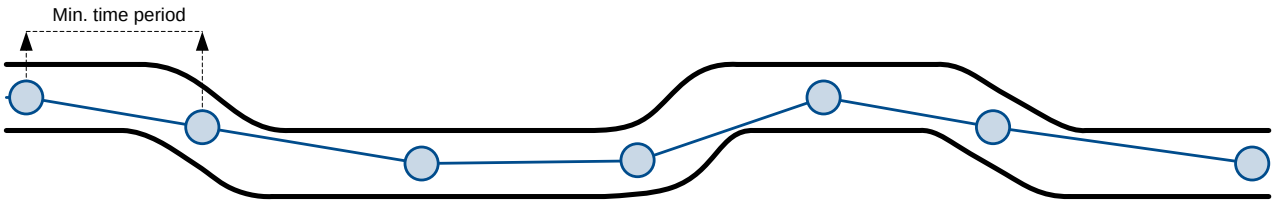

Figure 45 Time based tracking

Min. Distance

Distance based data acquiring (Figure **Figure 46**) – records are being acquired when the distance between previous coordinate and current position is greater than defined parameter value. Entering zero means that data won't be recorded. This method is suitable for non-urban territories where moving trajectory is straight.

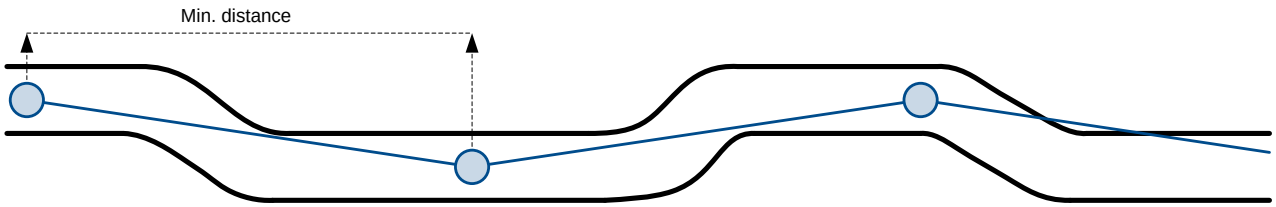

Figure 46 Distance based tracking

Min. Angle

Angle based data acquiring (FigureFigure **47**) – records are being acquired when angle difference between last recorded coordinate and current position is greater than the defined value. Entering zero disables data acquisition depending on angle. This method is suitable for urban territories. Note that record generation by angle is performed if vehicle is moving at least 6 km/h.

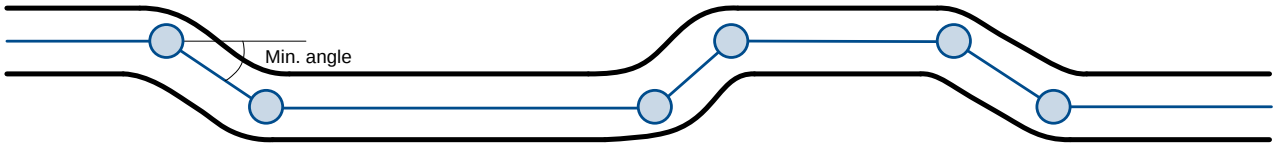

Figure 47 Angle based tracking

8.2 I/O data acquisition

Data also can be acquired using input output elements (it's change). All base elements are declared in Table 9 PERMANENT I/O elements list description and in Table 10 EVENTUAL I/O elements list description

Configuration

Data acquisition by I/O elements can be configured selecting I/O menu in configurator (refer to chapter 6.3.1.4.2).

Priority: Low – as a regular data; High – generated record are sent immediately to server; Panic – generated record are sent immediately to server and simultaneously the same record as SMS message;

High Level: High range of value input;

Low Level: Low Range of value input;

Averaging constant: (see detailed description in chapter 6.3.1.4.2)

Event generation

There are five record event generation type examples (I/O speed is taken as I/O value example), please refer to Figures below.

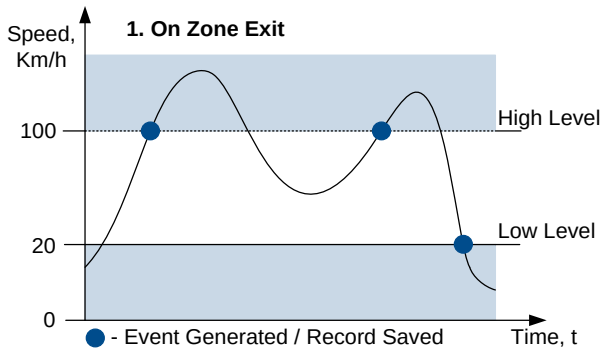

Figure 48 Event On Zone exit

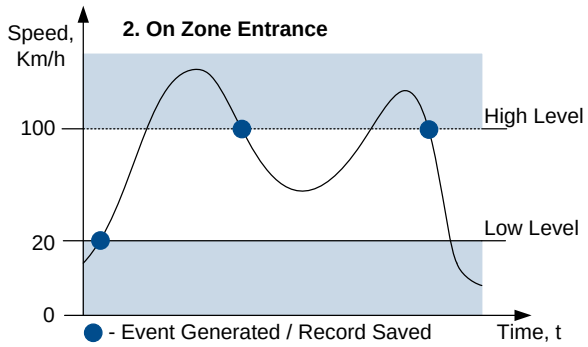

Figure 49 Event On Zone entrance

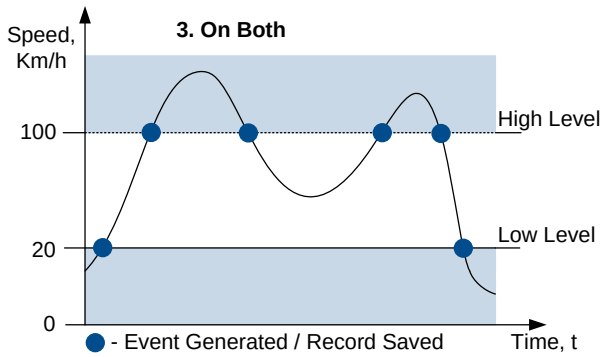

Figure 50 Event On both

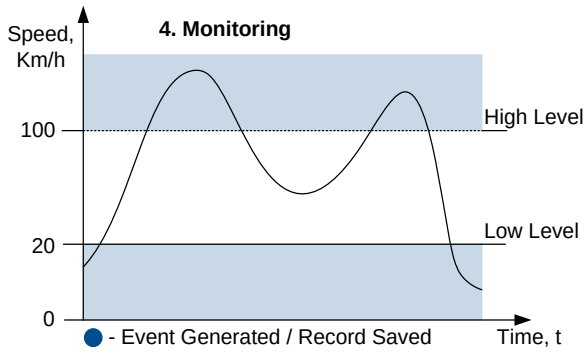

Figure 51 Monitoring

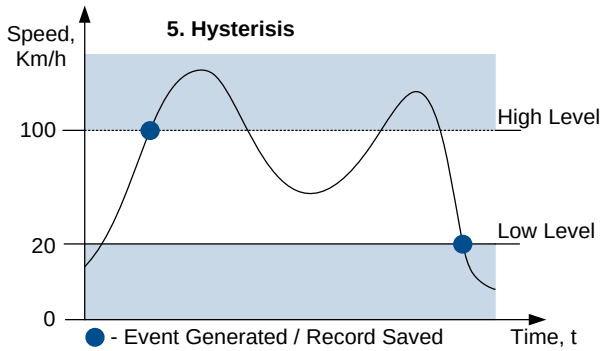

Figure 52 Event on Hysteresis

Event on Zone Entrance: record is generated when actual source value input is between High and Low level ranges which are set in configuration;

Event on Zone Exit: record is generated when actual source value input increases and becomes higher than High level and Low level values;

Event on Both: record is generated when actual source value input increases/decreases and becomes higher/lower than high and low level declared values;

Monitoring: no event at all; I/O values are recorded only when other trigger have worked (GPS acquisition or other I/O trigger)

Hysteresis: record is generated when actual source value input becomes higher than High level value, and decreasing becomes less than Low level value

Event on Change: record is generated on every source value change.

9 SLEEP/DEEP SLEEP MODES

SLEEP MODE

FM5300 is able to go to sleep mode after configurable Sleep timeout. This timeout (defined period) starts counting when device is in STOP mode. After timeout is reached and all conditions for sleep mode are met, device goes to sleep mode. While in **sleep mode**, FM5300 turns GNSS module off (it is possible to communicate with device through SMS). Therefore records with last good coordinate are being saved and sent to AVL server if configured. Depending on two configurable parameters, send period and min period*. Also event records are being recorded with last known coordinate and sent to AVL server. As a result power usage decreases allowing saving vehicle battery.

FM5300 can enter sleep mode if **ALL** of these conditions are met:

- FM5300 has to be configured to work in Sleep mode and Sleep timeout is reached;
- Device must be synchronized time with GNSS satellites;
- No movement by accelerometer is detected;
- Ignition (DIN1) is off;

FM5300 exits sleep mode when if **ONE** of following conditions are true:

- Movement by accelerometer is detected;

- Ignition (DIN1) is turned on;

While being in sleep mode FM5300:

- can save periodical or eventual records;
- send data to server;

* From firmware version 01.07.45.Rev.00

DEEP SLEEP MODE

While in **deep sleep mode**, FM5300 works the same way like in Sleep mode, device saves records with last good coordinates and sends them to AVL server if configured. Depending on two configurable parameters, send period and min period. The difference is that device turns off both GPS and GSM modules (it is not possible to wake up device via SMS or communicate with it). When there is a record, GSM/GPRS module is turned on to send data and after successful data send, device immediately returns to deep sleep mode.

FM5300 can enter deep sleep mode (standby mode) if **ALL** of these conditions are met:

- FM5300 has to be configured to work in Deep Sleep mode;
- Start-up timeout has elapsed (5 minutes after every restart of the device);
- No movement by accelerometer is detected;
- Ignition (DIN1) is off (driven logic low);
- Send period is more than 60 seconds (Data Acquisition Mode settings);
- USB cable is not connected.

FM5300 exits deep sleep mode if **ONE** of the following conditions are true:

- Movement by accelerometer is detected (depends on accelerometer start settings);
- Ignition (DIN1) is turned on (driven logic high);
- USB cable is connected;
- HIGH or PANIC priority eventual record is detected;

While being in deep sleep mode FM5300:

- can save periodical or eventual records;
- send data to server;

Note: If there is no need to save or send periodical data FM5300 has to be configured to switch to another profile on Deep Sleep Event where Min Period and Send Period parameters are 0 or big enough.

Note: In order to save GPRS traffic records saved in deep sleep mode contain below listed I/O elements information:
Digital Inputs (1-4), Analog Inputs (1-4), Battery Voltage, Battery Current, Digital Outputs (1-4), External Voltage, Movement Sensor, Deep Sleep.
Also, Deep Sleep I/O is always LOW PRIORITY!
In sleep timeout bar you need to set after what time your device goes back to sleep/ deep sleep modes.

10 FEATURES AND SCENARIOS

10.1 ECO driving/Green driving Scenarios

Four scenarios are available on FM5300 device.

Digital Output No.1 is used by scenarios – ECO driving/Green driving **and/or** Over Speeding;

Digital Output No.2 is used by scenarios – Authorized Driving **or** Immobilizer.

ECO driving/Green driving Scenarios. Helps to prevent and inspect driver about harsh driving. Eco driving scenario continuously monitors: accelerating, braking and cornering forces depending on build in accelerometer or Green driving depending on GPS. The device inspects driver if needed. Monitoring sensitivity is configurable.

DOUT1 is controlled by scenario for user needs, buzzer or LED for example. Output activation time after harsh event is also configurable.

To save GPRS traffic ECO driving/Green driving event will be **generated (included into records) only** when FM5300 measured values are higher than those set in configuration, without additional I/O settings.

To prevent generating false events, harsh acceleration and harsh braking is monitored only when following conditions are fulfilled:

- Ignition is ON (DIN1 = 1)
- Vehicle speed is equal or higher than 10km/h **(only when using Green driving)**

Harsh cornering is monitored only when following conditions are fulfilled:

- Ignition is ON (DIN1 = 1)
- Vehicle speed is equal or higher than 30km/h **(only when using Green driving)**

ECO driving or Green driving Scenario? Eco driving is based on accelerometer value and Green driving based on GPS position.

PLEASE NOTE that Eco Driving functionality generally is dependent on accelerometer. Device must be on plain/horizontal surface to calibrate itself correctly. It calibrates once it is powered up.

Mounting Requirements

PLEASE PAY ATTENTION, that ECO driving functionality will operate correctly only if device is mounted into the vehicle in a proper position.

ECO driving functionality operation is based on accelerometer. It is important to mount FM5300 device correctly to avoid functionality malfunctions (first condition). In the picture below (Figure 53) mounting recommendations are displayed. Please **note** that beside those recommendations

1. You can choose how FM5300 is deployed. It means that that there is no effect to measurements if FM5300 top/bottom side points up or down.
2. Device can be deployed at any place in the car.

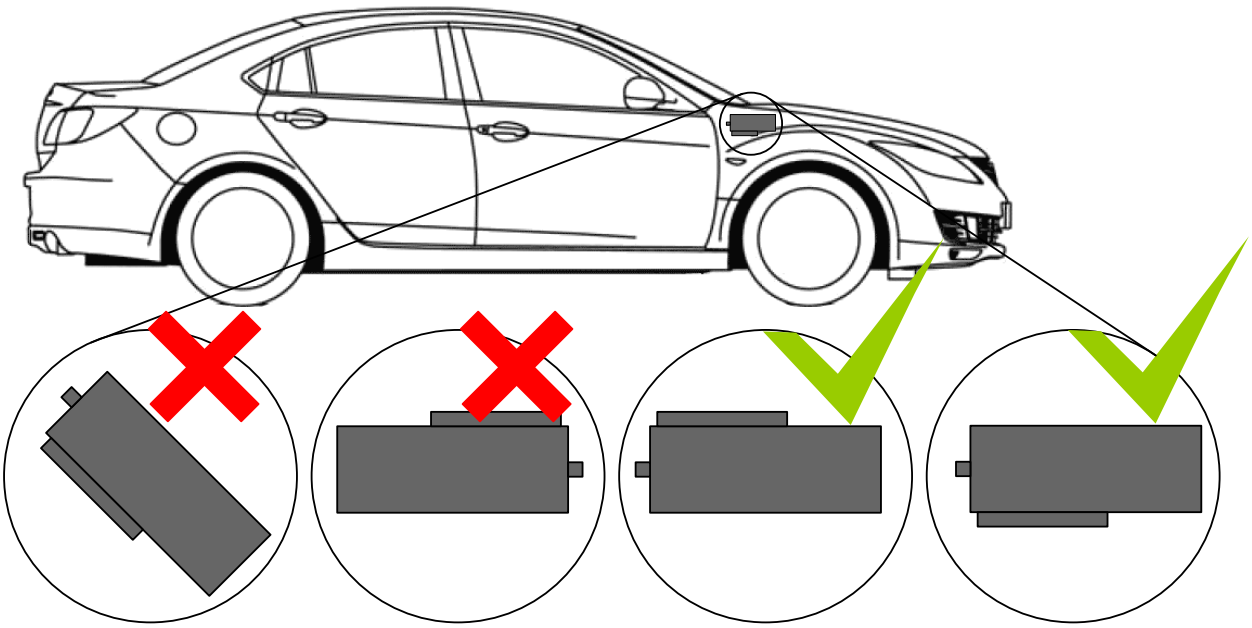

Figure 53 Correct mounting position of the FM5300 in the vehicle

For ECO driving to work properly, device connection pins socket must point towards the vehicles front side. Deviations of +/- 2° are allowed. But it should be as straight as possible.

Deviations of maximum +/- 15° are allowed (Figure 54).

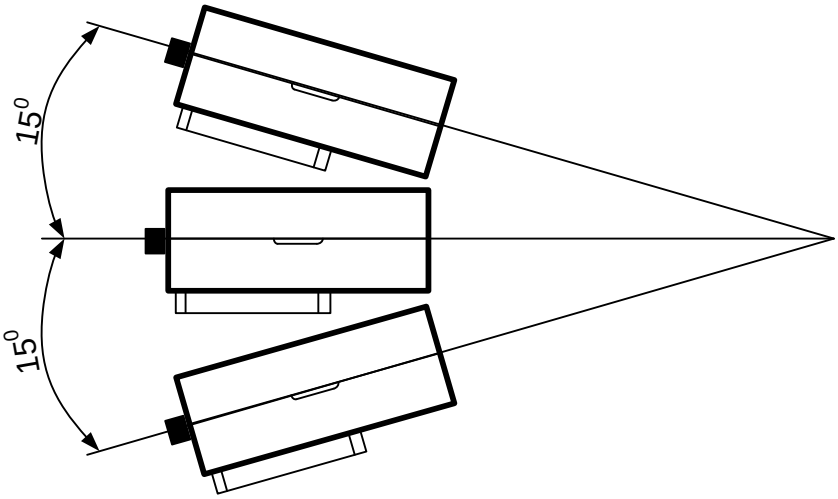

Figure 54 MAX deviation from horizontal plane of FM5300 mounting

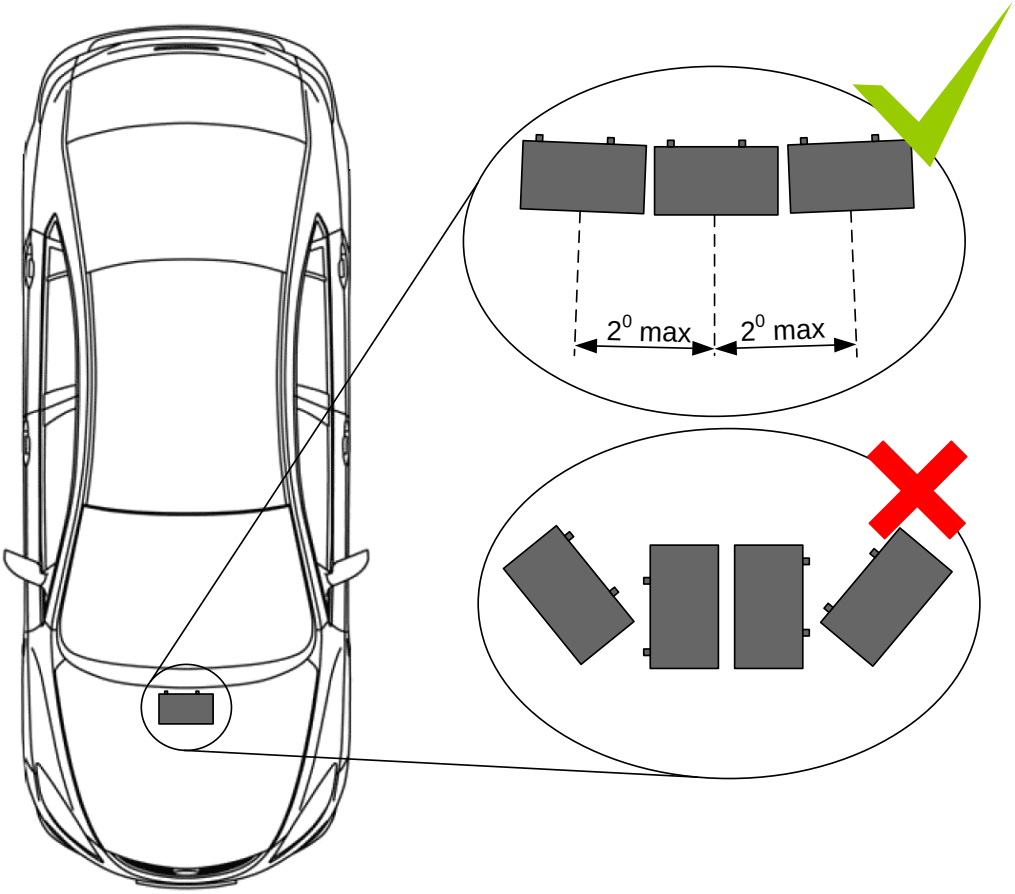

Figure 55 Horizontal position MAX deviation of FM5300 mounting

Horizontal position must be as flat as possible – parallel with vehicle plain.

Configuration

Parameters used with ECO driving/Green driving functionality.

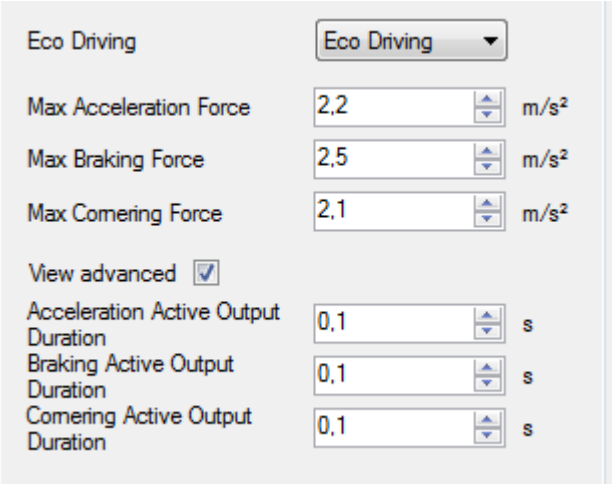

Figure 56 ECO driving/Green driving configuration parameters

Table 27 ECO driving/Green driving parameters description

ECO driving/Green driving configuration parameter name	Description
ECO driving/Green driving	Enable/Disable ECO driving/Green driving functionality
Max Acceleration Force	Value which can be reached while accelerating without triggering harsh acceleration event.
Max Braking Force	Value which can be reached while braking without triggering harsh braking event.
Max Cornering Force	Value which can be reached while cornering without triggering harsh cornering event.
Acceleration Active Output Duration	Set active output duration after harsh acceleration event detected
Braking Active Output Duration	Set active output duration after harsh braking event detected
Cornering Active Output Duration	Set active output duration after harsh cornering event detected

Data output

ECO driving/Green driving functionality generates events on three cases. If vehicles:

- Acceleration exceeds defined parameter value
- Deceleration (braking) exceeds defined value
- Cornering force exceeds defined value

Program continously monitors and process data from accelerometer than decides whether harsh event is detected or not. If any of three cases are satisfied event is generated. Record is saved and sent to server (FM5300 must be configured properly). Event value is multiplied by 10 before sending/saving record to get more precision when displaying **data***.

Digital output No.1 is activated for a period of time to warn driver. Output on-time should/can be configured separately for each case.

***Example.** If acceleration harsh event of 3.55 m/s2 detected. Record with value 3.55*10 = 35.5 ≈ 36 will be saved ant sent to server.

10.2 Overspeeding Scenario

Overspeeding. Helps to prevent from exceeding fixed speed and inspects driver if needed. DOUT1 is controlled by scenario for user needs, to manage buzzer, LED etc. During overspeeding event DOUT1 will be turning ON and OFF until speed is lower than configured Max Allowed Speed.

Mounting Requirements and Working Conditions

1. If user enables Green Driving and overspeeding scenarios simultaneously on DOUT1, digital output will be controlled by scenario which happens first. So the driver will be not aware of the second event, however both events data will be sent to server.
2. Scenarios on Digital Output No.1 and Digital Output No.2 can be used simultaneously.
3. DIN1 must be connected to Ignition.
4. Device module mounting position doesn't have any influence for correct scenario operation.

Configuration

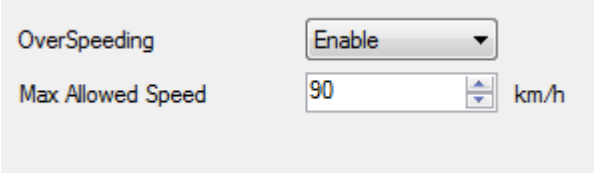

Figure 57 Overspeeding configuration parameters

Overspeeding. Enable/Disable Overspeeding.
Max Allowed Speed. Set speed limit to reach without triggering Overspeeding event.

10.3 Immobilizer Scenario

Immobilizer. Vehicle can be used only if iButton is connected. In this scenario iButton list is not used; connect any iButton to pass Immobilizer security. DOUT2 is controlled by scenario for user needs.

Configuration

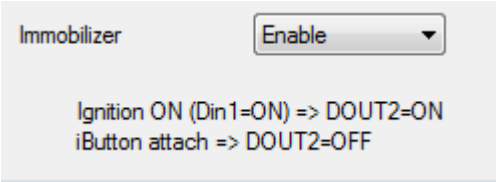

Figure 58 Immobilizer configuration parameters

Immobilizer. Enable/Disable Immobilizer Scenario.

10.4 Authorized Driving Scenario

Authorized Driving. Gives ability to use vehicle only for 50 specific iButton owners (specified in iButton list). DOUT2 is controlled by scenario for user needs, to manage buzzer, LED etc.

Configuration

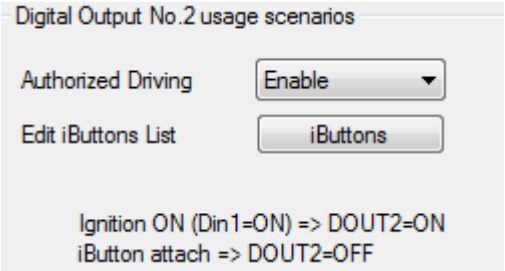

Figure 59 Authorized driving configuration parameters

Authorized Driving. Enable/Disable Authrized Driving.
Edit iButtons List. Enter authorized iButtons

10.5 COM1 and COM2 Working Modes

Silent Mode

FM5300 doesn't do any activity in silent mode. Logs aren't saved and any data isn't sent.

FM Log Mode

This is default mode of the FM5300. It is suitable for debugging.

LLS Mode

10.5.1.1 LLS Mode Configuration

1. Globals->COM1 Settings->Baudrate = 19200
2. Globals->COM1 Settings->Mode = LLS
3. Globals->COM2 Settings->Baudrate = 19200
4. Globals->COM2 Settings->Mode = LLS

Note

On COM1: Level will be with ID:201 Temperature will be with ID:202 On COM2: Level will be with ID:203 Temperature will be with ID:204.

On Valid data Receive Status LED will blink.

10.5.1.2 LLS Polynoms Configuration

If additional accuracy is required, LLS fuel sensors can be configured. For polynoms configuration to work both LLS on COM1 and COM2 must be selected. As that is done "Advanced LLS setup" can be clicked. (Figure 60)

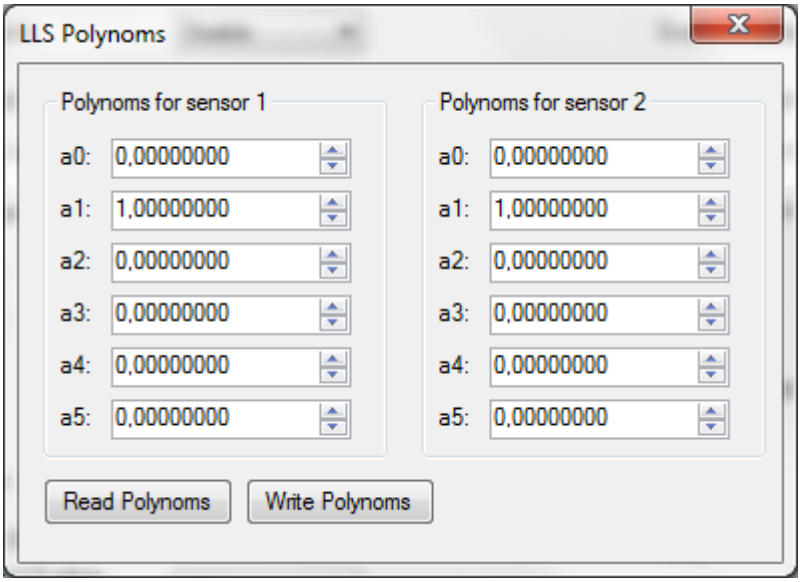

Figure 60 ILS Polynoms configuration

LCD Mode Configuration

1. Globals->COM1 Settings->Baudrate = 57600
2. Globals->COM1 Settings->Mode = LCD

or

1. Globals->COM2 Settings->Baudrate = 57600
2. Globals->COM2 Settings->Mode = LCD

How to use:

* From Terminal need send command “WT^W your text here”
* From Hercules (server) Send “#DO DAT=you text here” (in special packet)

Notes:
#DO DAT= command prints only to COM2
in addition these commands were added:
#DO DAT_1= to print to COM1 #DO DAT_2= to print to COM2
Link between FM and server has to be established for this functionality to work
On Valid data Receive Status LED will blink.

RFID HID Mode Configuration

1. Globals->COM1 Settings->Baudrate = 57600
2. Globals->COM1 Settings->Mode = RFID

or

1. Globals->COM2 Settings->Baudrate = 57600
2. Globals->COM2 Settings->Mode = RFID
3. Globals->COM2 Settings->Parity = Even

RFID MF7 Mode Configuration

1. Globals->COM1 Settings->Baudrate = 9600
2. Globals->COM1 Settings->Mode = RFID MF7

or

1. Globals->COM2 Settings->Baudrate = 9600
2. Globals->COM2 Settings->Mode = RFID MF7
3. Globals->COM2 Settings->Parity = None

Garmin Mode Configuration

10.5.1.3 Settings

1. Globals->COM1 Settings->Baudrate = 9600
2. Globals->COM1 Settings->Mode = Garmin

or

1. Globals->COM2 Settings->Baudrate = 9600
2. Globals->COM2 Settings->Mode = Garmin
3. Globals->COM2 Settings->Parity = None

<u>Ping Filter Enable Parameter:</u>

0 – [DISABLED] = Ping packet will not blocked.
1 – [ENABLED] = Ping packet will be blocked.

<u>Unicode Support Packet Enable Parameter:</u>

0 – [DISABLED] = Unicode Packet will be send to server.
1 – [ENABLED] = Unicode Support Packet will not be send to server.

Note:
If the Garmin is selected on com1 and com2 the com1 will be preferred.

These parameters are automatically configured when Garmin mode is selected:

* if DeepSleep enabled change to Sleep
* Send Period = 1
* Record refresh timeout 90900900 sec.
* ignores weektime, timesync, and records

10.5.1.4 Firmware Configuration

Supported Garmin protocols: A***

(http://developer.garmin.com/lbs/fleet-management/fmi-protocol-support-matrix/)

Blocked Garmin ID's:

- Command 0A
- Date/Time Data 0E
- Unit ID/ESN 26
- Pvt Data 33
- Legacy Stop Message 87
- Legacy Text Message 88
- Ping 0260
- Ping response 0261
- Product ID Request 0001
- Product ID Data 0002

FM send ACK the these packets, ant these packets are not sent to server to reduce traffic.

Allowed Garmin ID's:

- ACK 06
- NAK 15
- Fleet Management Packet A1

Note:

If packet are not listed here packet ID will be ignored.

COM TCP Link Mode

In this mode link with external device using text messages can be established.

Any string of data coming to COM will be routed to server. (if link is currently active) First message will be packet to special packet[6].

If you want to send message to COM, you need to pack in special packet.

1. Globals->COM2 Settings->Baudrate = any of available baudrates
2. Globals->COM2 Settings->Mode = TCP Link Mode
3. Globals->COM2 Settings->Parity = any setting

These parameters are 78utomatically configured when TCP Link mode is selected:

* Record refresh timeout 9999999 sec.
* ignores weektime, timesync, and records

[6] For additional information of special packet, please contact to your local sales representative

TCP Link Mode (Binary)

This mode is the same as above but binary message will be accepted to/from COM port. This mode also have some advanced filtering capabilities.

1. Globals->COM2 Settings->Baudrate = any of available baudrates
2. Globals->COM2 Settings->Mode = TCP Link Mode
3. Globals->COM2 Settings->Parity = any setting
4. Globals->COM2 Settings->Timeout = any setting (x10 msec.)
   (How much time to wait before detecting end of packet)
5. Globals->COM2 Settings->Parity = any setting
6. Globals->COM2 Settings->Prifix1 = any setting
   (incoming 1 byte must match to Prefix1 to be accepted)
7. Globals->COM2 Settings->Prifix2 = any setting
   (incoming 2 byte must match to Prefix2 to be accepted)
8. Globals->COM2 Settings->Prifix3 = any setting
   (incoming 3 byte must match to Prefix3 to be accepted)
   (0 and 255 don’t care)

NMEA Log Mode

In this mode NMEA logs are sent via COM1 and COM2 ports.

11 SMS COMMAND LIST

SMS commands are used to identify FM5300 current state, possible configuration errors, perform reset, set parameters, switch on/off outputs, etc.

SMS commands should be sent along with module login and password and sender number must be entered in the authorized number list (if at least one other number is entered). Please see SMS settings in chapter 6.3.2.2.2 for more details.

SMS structure is as follows:
<login><space><password><space><command>
Example:
opa opa getgps

Table 28 SMS command list and description

Command	Description	Response
getstatus	Modem Status information	Yes
getweektime	Current device time, Day of Week and amount of minutes passed since start of week	Yes
getops	List of currently used and available GSM operators	Yes
readops #	Emergency gsm operator readout from active profile # - 1,2,3 1 – operators [1-20] 2 – operators [21-40] 3 – operators [41-50]	Yes
getnmeainfo	Nmea error debug sms	Yes
getcfgtime	Date and Time of last successful configuration	Yes
getgps	Current GPS data and time	Yes
loadprofile #	Load specified profile into RAM Engine Profile. # - number of profile to load	Yes
cpureset	Reset CPU	No
resetallprof	Reset all FLASH profiles to default profile	Yes
getver	Device / Modem / Code version information	Yes
getinfo	Device runtime system information	Yes
deleterecords	Delete all records saved on FLASH	No
getio	Readout digital inputs and outputs, analog inputs	Yes
readio #	Readout input value according entered ID, # - ID value	Yes
setdigout XXXX Y1 Y2 Y3 Y4	Set digital outputs 0 – OFF, 1 – ON Y1 – timeout for DO1 Y2 – timeout for DO2 Y3 – timeout for DO3 Y4 – timeout for DO4	Yes
getparam #	Readout parameter value according entered ID. # - ID value.	Yes

setparam # #	Set parameter value according entered ID and Value. 1.# - ID value. 2.# - New Parameter Value	Yes
flush #,#,#,#,#,#,#	Initiates all data sending to specified target server 1.# - IMEI 2.# - APN 3.# - LOGIN 4.# - PASS 5.# - IP 6.# - PORT 7.# - MODE (0-TCP/1-UDP)	Yes
sn x [x=0;1]	Enable/disable static navigation	Yes
banlist	Banlist information	Yes
crashlog	Crash log information	Yes
delete_all_sms	Delete all read SMS	No
getgnss	Current GNSS information	Yes
odinfo	Current odometer information	Yes
prof2backup	Saves configuration to backup	Yes
backup2prof	Recovers saved profile	Yes
getcontsens	Dallas temp Sensors ID order	Yes
savecontsens	Save Dallas temp Sensors ID order as it written in „getcontsens”	Yes

11.1 getstatus

Table 29 getstatus

Response details	Description
Data Link	Indicate module connection to server at the moment: 0 – Not connected, 1 – connected
GPRS	Indicate if GPRS is available at the moment
Phone	Voice Call status: 0 – ready, 1 – unavailable, 2 – unknown, 3 – ringing, 4 – call in progress, 5 – asleep
SIM	SIM Status: 0-ready, 1-pin, 2-puk, 3-pin2, 4-puk2
OP	Connected to GSM Operator: Numerical id of operator
Signal	GSM Signal Quality [0-5]
NewSMS	Indicate if new message received
Roaming	0 – Home Network, 1 – roaming
SMSFull	SMS storage is full? 0 – ok, 1 – SMS storage full
LAC	Location Area Code
Celll ID	Cell ID

Answer Example: Data Link: 0 GPRS: 1 Phone: 0 SIM: 0 OP: 24602 Signal: 5 NewSMS: 0 Roaming: 0 SMSFull: 0 LAC: 0 Cell ID: 0

11.2 getweektime

Table 30 getweektime

Response details	Description
Clock Sync	Indicates system clock synchronization status. 0 – System is not synchronized, 1 – System synchronized
DOW	Day Of Week – indicates current day of week starting from 1 – Monday, 2 – Tuesday, etc.
Time	Indicates current GMT time
WeekTime	Indicates time in minutes starting from Monday 00:00 GMT

Answer Example: Clock Sync: 1 DOW: 4 Time 12:58 Weektime: 6538

11.3 getops

Table 31 getops

Response details	Description
LIST	Returns list of current available allowed operators.

Answer Example: (2,"LT BITE GSM","BITE","24602"),(3,"TELE2","TELE2","24603")

11.4 readops

Table 32 readops #

Response details	Description
LIST	Returns acknowledgment of operators in active profile configuration.

11.5 getnmeainfo

Table 33 getnmeainfo

Response details	Description
BchSum	Nmea packets with bad checksum counter.
Hact	Actual HDOP
BT	Nmea packets with bad timestamp counter
Blat	Nmea packets with bad latitude counter
Blon	Nmea packets with bad longitude counter
BSpd	Nmea packets with bad speed counter
Bang	Nmea packets with bad angle counter
GJC	Nmea packets with GPS jumps counter
Rjc	Rejected Nmea packets counter

Answer Example: BChSum: 0 HAct: 0.9 BT: 0 BLat: 0 BLon: 0 BSpd: 0 BAng: 0 GJC: 0 , Rjc: 11, Flt: 975, V: 1

11.6 getcfgtime

Table 34 getcfgtime

Response details	Description
Date/Time	Returns last performed configuration date and time.

Answer Example: Last Configuration was performed on: 2010.4.15 5:45:19

11.7 getgps

Table 35 getgps

Response details	Description
GPS	Indicates valid (1) or invalid (0) GPS data
Sat	Satellites in use
Lat	Latitude (Last good Latitude)
Long	Longitude (Last good Longitude)
Alt	Altitude, m
Speed	Ground speed, km/h
Dir	Ground direction, degrees
Date	Current date
Time	Current GMT time

Answer Example: GPS:1 Sat:7 Lat:54.71473 Long:25.30304 Alt:147 Speed:0 Dir:77 Date: 2007/8/24 Time: 13:4:36

11.8 loadprofile#

Returns acknowledgment of successful profile changing from currently used to preferred.
Example: Profile Nr.1 successfully changed to Profile Nr.3

11.9 cpureset

Resets cpu – does not send a response back to the sender.

11.10 resetallprof

Resets all FLASH profiles to default profile.
Answer Example: All Profiles Reseted.

11.11 getver

Table 36 getver

Response details	Description
Code Ver	Firmware version

Device IMEI	IMEI
Device ID	Device ID is used to detect which type of configuration to load
BL Ver	Bootloader Version
Modem App Ver	Version of modem application
Hw	Hardware type

Answer Example: Code Ver:01.02.12 Rev:1 Device IMEI:353976010139156 Device ID:000007 BL Ver:05.16 Modem Ver:TM11Q_R_01.03.04.00_004 Hw:Int Bat + GGG + LIS3DH

11.12 getio

Table 37 getio

Response details	Description
DI#	Digital Input state
DO#	Digital Output state
AI#	Analog Input state

Answer Example: DI1:0 DI2:0 DI3:0 DI4:0 AI1:0 AI2:0 AI3:0 AI4:0 DO1:0 DO2:0 DO3:0 DO4:0

11.13 getinfo

Table 38 getinfo

Response details	Description
INI	Device Initialization Time
RTC	RTC Time
RST	Restart Counter
ERR	Error Counter
SR	Number of Sent Records
BR	Number of broken records
CF	Profile CRC Fail counter
FG	Failed GPRS counter
FL	Failed link counter
UT	UPD Timeout counter
P#	Current profile
#;#;#;#;#	# - how many times appropriate profile (Profile0; Profile1; Profile2; Profile3; Profile4) was loaded
SMS	Sent SMS Counter
NOGPS	No GPS Timer
GPS	GPS receiver state. 0 – OFF, 1 – restarting, 2 – ON but no fix, 3 – ON and operational, 4 – sleep mode
SAT	Average satellites
RS	Reset Source Identification
RF	Number of records found on FLASH

Answer Example: INI:2007/8/24 10:15 RTC:2007/8/24 12:43 RST:2 ERR:11 SR:182 BR:0 CF:0 FG:0 FL:0 UT: P:1;0;1;0;0;0 SMS:2 NOGPS:0:0 GPS:3 SAT:7 RS:7 RF:11

11.14 deleterecords

Deletes all saved records from device memory. Device does not send a response back to the sender.

11.15 readio

Table 39 readio #

Response details	Description
ID	IO element ID
Value	IO Element value

Answer Example: IO ID:3 Value:0

11.16 setdigout #### X Y Z W

Sets digital outputs to ON or OFF state (for some time if needed). Value is written as a row for OUT1, OUT2, OUT3, OUT4 values.

Example: 'setdigout 0010 0 0 5 0' will set OUT3 to high level for 5 seconds, while OUT1, OUT3 and OUT4 to low level.

Ans. Example: "DOUTS are set to:0010 TMOs are: 0 0 5 0. Out1 Scenario: Enabled Out2 Scenario: Disabled"

To ignore digital outputs values and make ON/OFF state only to one digital output any character except 0 and 1 can be used.

Example: 'setdigout ?1??' will set OUT2 to high level for indefinite period of time while OUT1, OUT3 and OUT4 remain as they were set before

11.17 getparam

Read parameter value. ID consists of 4 digits – first digit identifies profile, second, third and fourth identifies parameter ID as described in Parameters Configuration chapter.

Table 40 getparam ####

Response details	Description
ID	Profile number and parameter ID
Value	Parameter value

Example: 'getparam 1245' command will request server IP address in profile1.

11.18 setparam ####

Sets new value for parameter. ID consists of 4 digits – first digit identifies profile, second, third and fourth identifies parameter ID as described in Parameters Configuration chapter. In value field a new parameter value is entered.

Example: 'setparam 1245 127.0.0.1' will change configured IP address in profile1 with new value

11.19 flush #,#,#,#,#,#,#

Initiates all data sending by GPRS to specified target server. Comma separated parameters go as numbered:

1.# - IMEI
2.# - APN
3.# - GPRS LOGIN
4.# - GPRS PASSWORD
5.# - IP
6.# - PORT
7.# - MODE (0-TCP/1-UDP)

Parameters are separated by comma (no spaces needed). In case you do not need to enter parameter (Login/Pass) – do not put space, simply put comma and write next parameter.

Example: opa opa flush 353976012555151,banga,,,212.47.99.62,12050,0

Table 41 flush

Response details	Description
FLUSH SMS Accepted	FLUSH SMS Accepted
# records found on FLASH	Number of records found on FLASH
Minimum Records to Send: #	Number of minimum saved records to send
GPRS Enabled: #	State of the GPRS connection, 0 – disabled; 1 – enabled
Time Sync: #	Indicates time synchronization on the device, 0 – not synchronized; 1 – synchronized

Answer Example: FLUSH SMS Accepted. 11 records found on FLASH. Minimum Records to Send: 1. GPRS Enabled: 1. Time Sync: 1.

11.20 getgnss

Table 42 getgnss

Response details	Description

FIX	GPS fix
SAT GL	Glonass sattelites in view
GP	Gps sattelites in view

Answer Example: FIX:1 SAT GL:5 GP:10

11.21 sn x

Returns state of static navigation and previous state: Static Nav is Disabled. Was:X or Static Nav is Enabled. Was:X (1 – enabled, 0 – disabled). If sent X is not 0 or 1, then response is: WARNING: Undefined SN parameter: X.

11.22 banlist

Returns a list of possible banned operators. If device returns zeroes, there are no banned operators saved. Format: A.Bs.C.D

Table 43 banlist

Response details	Description
A	Banned operator code
Bs	Time left
C	Reason (1 – can't connect to operator; 2 – can't open GPRS connection; 3 – operator closed connection itself; 4 – connection to operator was successful, but after that device was disconnected from GSM network.)
D	Counter (how many times this operator code was already banned)

11.23 crashlog

Returns list of possible device crashes.

11.24 braminfo

Table 44 braminfo

Response details	Description
Boot	Bootloader parameter
Uptime	Device uptime
RST	Device reset counter
IWDF_RST	Independent watchdog reset counter
BadRec	Bad record counter
AD	Authorized driving state
GD	ECO driving/Green driving state
IM	Immobilizer state

Answer Example: Boot:55aai Uptime:0 RST:3 IWDG_RST:0 WWDG:1 SoftR:0 Lpwr:0 BadRec:0 AD:0 GC:2783 IM:0

11.25 odinfo

Odometer Debug

Field Name	Full Name	Posible values
E	Odoemter Enable	0-Disable 1-Enabled
V	Odometer Value	0-UINT32_MAX
M:	Mode	0- Differential 1- Continuous
Mv:	Movement	0- Not moving 1- moving
GPS:	GPS Module Status	0-OFF 1-Restarting 2-Ready no FIX 3-Working FIX 4-Sleep
FIX:	GPS FIX	0- No FIX 1- FIX
Valid:	Valid Nmea data	0- Not Valid 1- Valid
Sp:	GPS Speed	[0-350]
Ns:	Nmea Stable Flag	0 – Not Stable 1 –Stable
Jl:	Jump Lock	0- Lock ON 2- Lock OFF
Along:	Current Longitude	
Alat:	Current Latitude	
Olong:	Odometer Longitude	
Olat:	Odometer Latitude	

Answer Example: E:1 V:300 M:1 Mv:1, GPS:2 FIX:0 Valid:1 Sp:0 Ns:0 Jl:1 Along:0.000000 Alat:0.000000 Olong:0.000000 Olat: 0.000000

11.26 getcontsens

Returns a list of connected Dallas temp Sensors ID

Answer Example: „3 Tsensors IDs saved to Flash: 28CE03F9030000DA, 28F718F9030000AD, 28FFE7F80300004A“

11.27 savecontsens

Save Dallas temp Sensors ID order as it written in „getcontsens”

Answer Example: „3 Tsensors IDs saved to Flash: 28CE03F9030000DA, 28F718F9030000AD, 28FFE7F80300004A“

12 CAN

Controller Area Network (CAN or CAN-bus) is a computer network protocol and bus standard designed to allow microcontrollers and devices to communicate with each other and without a host computer. It was designed specifically for automotive applications but is now also used in other areas.

SAE J1939 is the vehicle bus standard used for communication and diagnostics among vehicle components. Based on the same architecture FMS protocol dedicated to telematics systems is available. It has certain standardized parameters available, such as fuel consumption, engine work-hours, etc. Please visit http://www.fms-standard.com/ for more information and message structure.

The FMS-interface is an optional interface of different truck manufacturers. Supported information is dependent upon vehicle equipment. For the full information set, additional Electronic Control Units (ECU) may be required. Please contact the manufacturer or your dealer for more details.

Vehicle brands supported:

- Mercedes Benz
- Volvo
- MAN
- DAF
- Iveco
- Scania
- Renault

Available parameters:

- Total Fuel
- Total Distance
- Status of brake pedal *
- Engine Torque *
- Actual fuel
- Accelerator pedal position *
- Status engine brake
- Speed *
- RPM
- Engine hours
- Vehicle Weight *
- Fuel level
- Tachograph data *

12.1 General description

- CAN works if no USB cable is inserted and isn't in deep sleep mode;
- Uses six different speeds: 50 kbps, 100 kbps, 125 kbps, 250 kbps, 500 kbps;
- Auto Baud rate detection;
- Filtering messages (StId, ExtId) according to configuration;

- Using mask, filters required bytes;
- Different CAN configurations.

12.2 Configuration

Manual CAN data can be configured using “Manual CAN” in CAN tab, figure below (Figure 61 CAN configuration window).

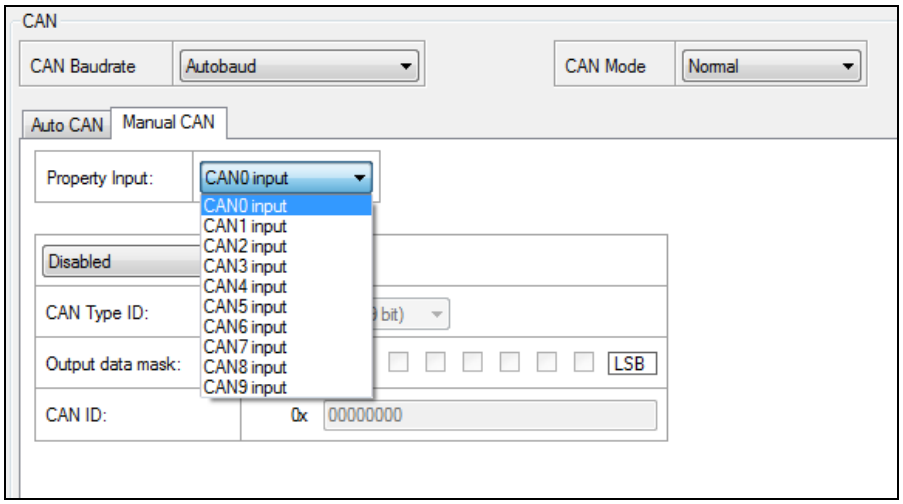

Figure 61 CAN configuration window

CAN baud rate configuration: speed depends on operating CAN network speed, if that speed is unknown “Autobaud” mode is recommended (Figure 62 CAN baud rate configuration window);

3. Availability of parameter depends on vehicle’s model and configuration of FMS interface of the truck.

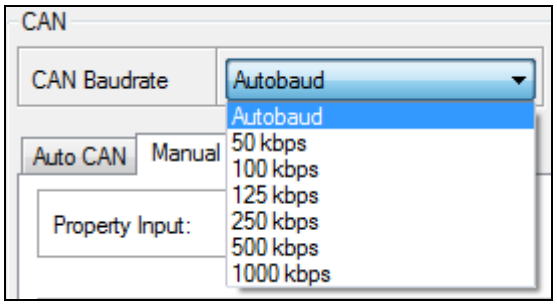

Figure 62 CAN baud rate configuration window

Note that If FM5300 is set to “Autobaud” mode it will always check for CAN network even if device isn’t connected to any of it.

CAN message ID type: Message ID type (Figure 63 CAN message ID types6) two types according to SAEJ1939 standard: Standard ID (value: 0 to 0x7FFh) and Extended ID (value: 0 to 0x1FFFFFFFh).

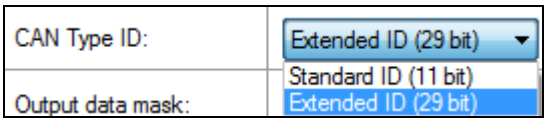

Figure 63 CAN message ID types

Message ID value is entered in hex format. This parameter is used to configure hardware message filter (Figure 64). All messages contain 8 bytes of data, to select particular data/bytes "Output Data Mask" is used, it's done by ticking required bytes, only selected bytes are sent to server.

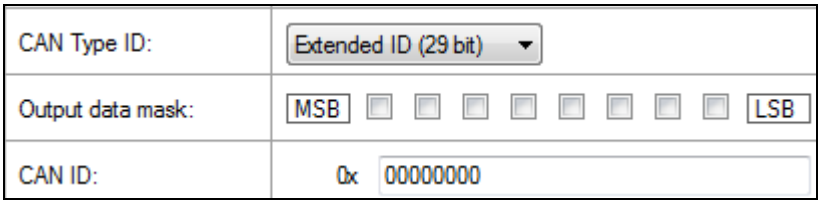

Figure 64 CAN message filter configuration

12.3 Example

A sample CAN message has the following structure: X18FEE9018FFFFFFFF23840300, where essential parts are 'FEE9' – identifier and 'FFFFFFFF23840300' – data bytes.

CAN messages are configured like any other I/O parameters. They consist of 4 identifier bytes and 8 data bytes. Below you will find a sample configuration for fuel consumption parameter:

ID type – is always 29 bits.

Output data mask – defines which data bytes are sent to the server (sometimes not all data bytes are necessary).

CAN ID – this is 4 byte identifier. Messages use 4 bytes, but the first and last bytes may differ in different vehicle models while the middle four bytes are the same for all vehicles. The first and last bytes may have any value. Because of this reason it is recommended to write FF in the first byte and the same in the last byte.

This information is provided only as an example and Teltonika takes no responsibility for information accuracy or damage that may be done to the vehicle or FM5300 module while integrating it.

Example:

All Mercedes Benz Actros 2 models with Vehicle Identification Number (VIN) starting with WDB93 have a possibility to connect FM5300 module to CAN bus. This can be done by connecting to special PSM module (which may or may not be included in the truck) or ground module of the vehicle. For CAN signal to be available, parameter 520 must be enabled in "kommunikationsschnittstelle" in the vehicle with Mercedes Stardiagnose.

CAN wires can be found on X5 connector located in the fuse box (Figure 65):

Pin 5: CAN Low signal (yellow wire)

Pin 2: CAN High signal (blue wire)

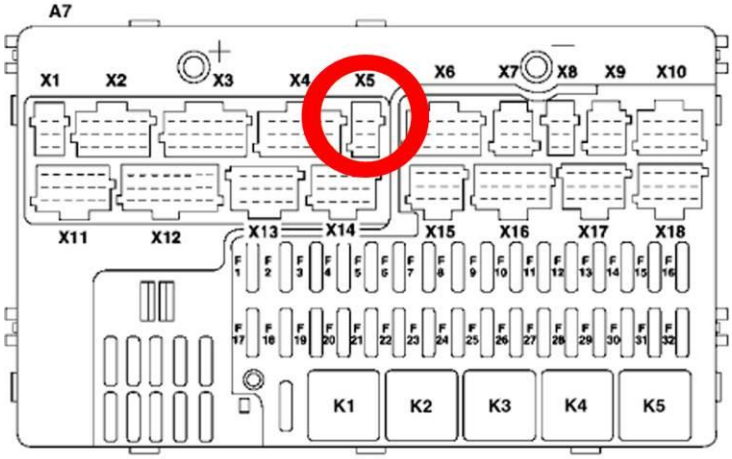

Figure 65 X5 plug on Mercedes Benz

In the example FM5300 will filter all CAN messages with identifier FFFEE9FF (fuel consumption) (Figure 66).

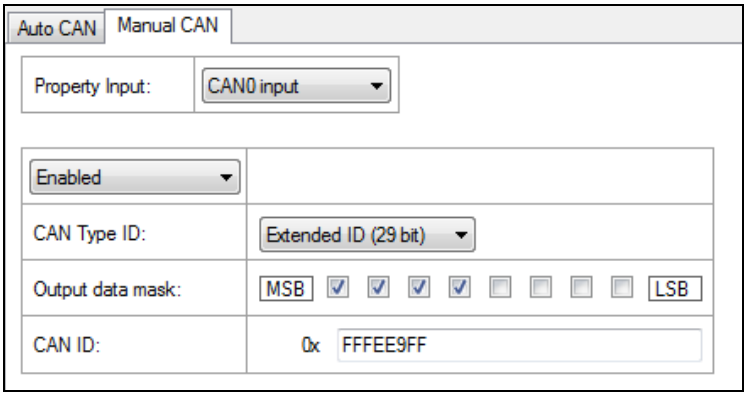

Figure 66 CAN parameter configuration example

Note: Averaging constant cannot be used with CAN data, because this information comes in digital format. So in order to prevent data loss, set Averaging constant parameter to 1.

Most parameters have certain resolution. FEE9 parameter has 0.5L/bit gain, so value that is sent to server has to be multiplied by 0.5.

Data parsing is preceded by selecting correct message from all available on CAN bus. FMS standard interface description indicates that fuel consumption is parameter with ID FEE9:

Table 45 FMS standard – fuel consumption

00FEE9								PGN Hex
65,257								PGN
1000 ms								Rep. Rate
Data Byte 1	**Data Byte 2**	**Data Byte 3**	**Data Byte 4**	**Data Byte 5**	**Data Byte 6**	**Data Byte 7**	**Data Byte 8**	Byte No.
Not used for FMS-Standard	Not used for FMS-Standard	Not used for FMS-Standard	Not used for FMS-Standard	Total fuel used 0,5 L/Bit gain 0 L offset 5.2.5.66 SPN 250	Total fuel used 0,5 L/Bit gain 0 L offset 5.2.5.66 SPN 250	Total fuel used 0,5 L/Bit gain 0 L offset 5.2.5.66 SPN 250	Total fuel used 0,5 L/Bit gain 0 L offset 5.2.5.66 SPN 250	Name Values Values Values SAE ref SPN

The example indicates how fuel consumption message is selected and how configuration impacts this selection (Figure 67).

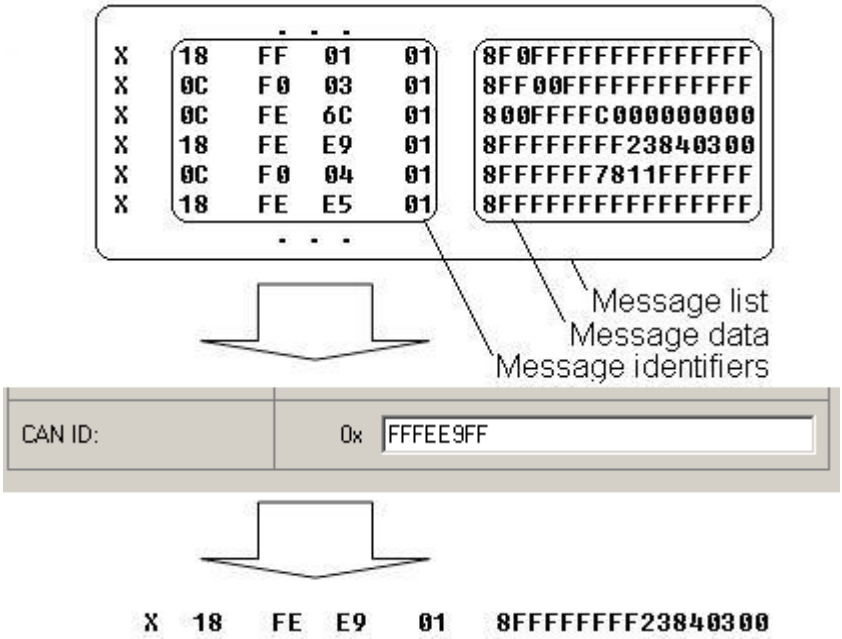

Figure 67 Example

When certain message is filtered, FM5300 checks which data bytes should be sent to server. Document indicates that 5-8 bytes are used in FMS standard.

Table 46 FMS standard – fuel consumption (5-8 bytes)

Data Byte 5								Data Byte 6								Data Byte 7								Data Byte 8								Byte No.
8	7	6	5	4	3	2	1	8	7	6	5	4	3	2	1	8	7	6	5	4	3	2	1	8	7	6	5	4	3	2	1	Bit no
Total fuel used 0,5 L/Bit gain 0 L offset 5.2.5.66 SPN 250								Total fuel used 0,5 L/Bit gain 0 L offset 5.2.5.66 SPN 250								Total fuel used 0,5 L/Bit gain 0 L offset 5.2.5.66 SPN 250								Total fuel used 0,5 L/Bit gain 0 L offset 5.2.5.66 SPN 250								Name Values Values Values SAE ref SPN

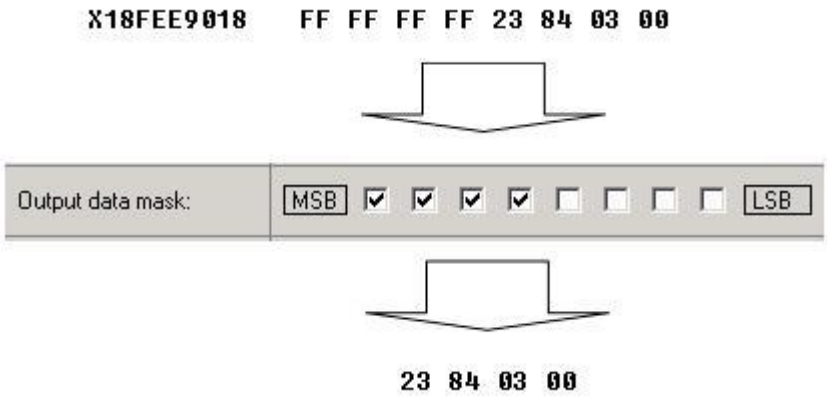

Figure 68

Data bytes are filtered by selecting the checkboxes in Output data mask. Note, that configurator has them listed starting with MSB.

After message is filtered it is attached to the data packet and sent to the server. Values are returned in HEX. 00 03 84 23(HEX) = 230435(DEC). Notice, that data resolution is 0.5L/bit gain – value has to be multiplied by 0.5, therefore vehicle used total of 115217,5 liters of fuel since it

12.4 AutoCAN description

AutoCAN function allows user to automatically scan for available messages on CAN bus and configure CAN data sending to server. In order to configure AutoCAN connect FM5300 to computer with Port ½ cable. Launch FM53xx configurator version 1.1.1.7 or higher. Push "Connect" button, then „CAN" button (Figure 69). CAN configuration menu will be opened (Figure 70).

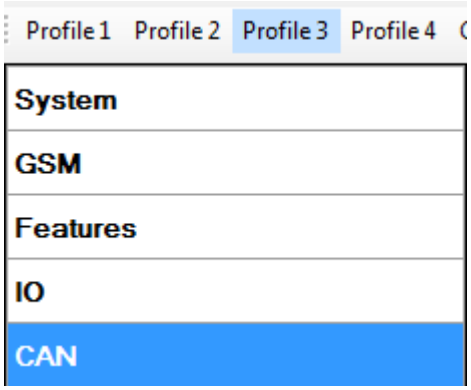

Figure 69 Entering CAN configuration

- SCAN scans once for available messages on CAN bus;
- Monitoring – toggles scanning of messages on CAN bus every 3 seconds;
- Offline Configuration – enables CAN configuration when FM53xx is not connected to CAN bus;
- Auto CAN tab – configure CAN by selecting available messages from CAN bus;
- Manual CAN tab – Configure CAN by manually entering CAN message ID and data mask;

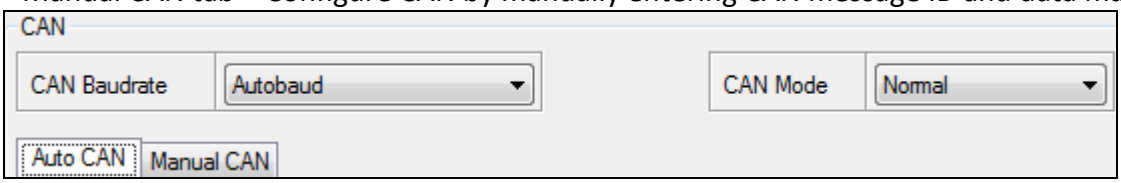

Figure 70 CAN configuration menu

Configuration

To start CAN configuration push "SCAN" button. A table of all available CAN messages will appear (Fig. 63). Description of columns:

- Category – shows CAN message;
- Parameter – shows configurable parameter name;
- Value – shows scanned value of parameter;
- Send data to server – allows to choose the type of data when it's generated:
  - Disabled – Data will not be collected
  - On low priority – records will be generated as low priority events;
  - On high priority – records will be generated as high priority events and immediately sent to server via GPRS (if GPRS is available);
  - On panic – records will be generated as panic priority events and immediately sent to server via GPRS, if GPRS is not available records will be sent via SMS messages;
- Data acquisition type – allows to choose when records are generated:
  - Monitoring – monitors data;
  - On change – record is generated when parameter value is changed;
  - Hysteresis – record is generated when increasing parameter value becomes higher than High value, and decreasing becomes less than Low value

- Event on exit – record is generated when parameter value becomes higher than High value or lower than Low value;
- Event on entrance – record is generated when parameter value becomes between High and Low values;
- Event on both – record is generated when parameter value crosses High or Low values;

- Low – allows to choose low value for Data acquisition;
- High – allows to choose High level for Data acquisition;

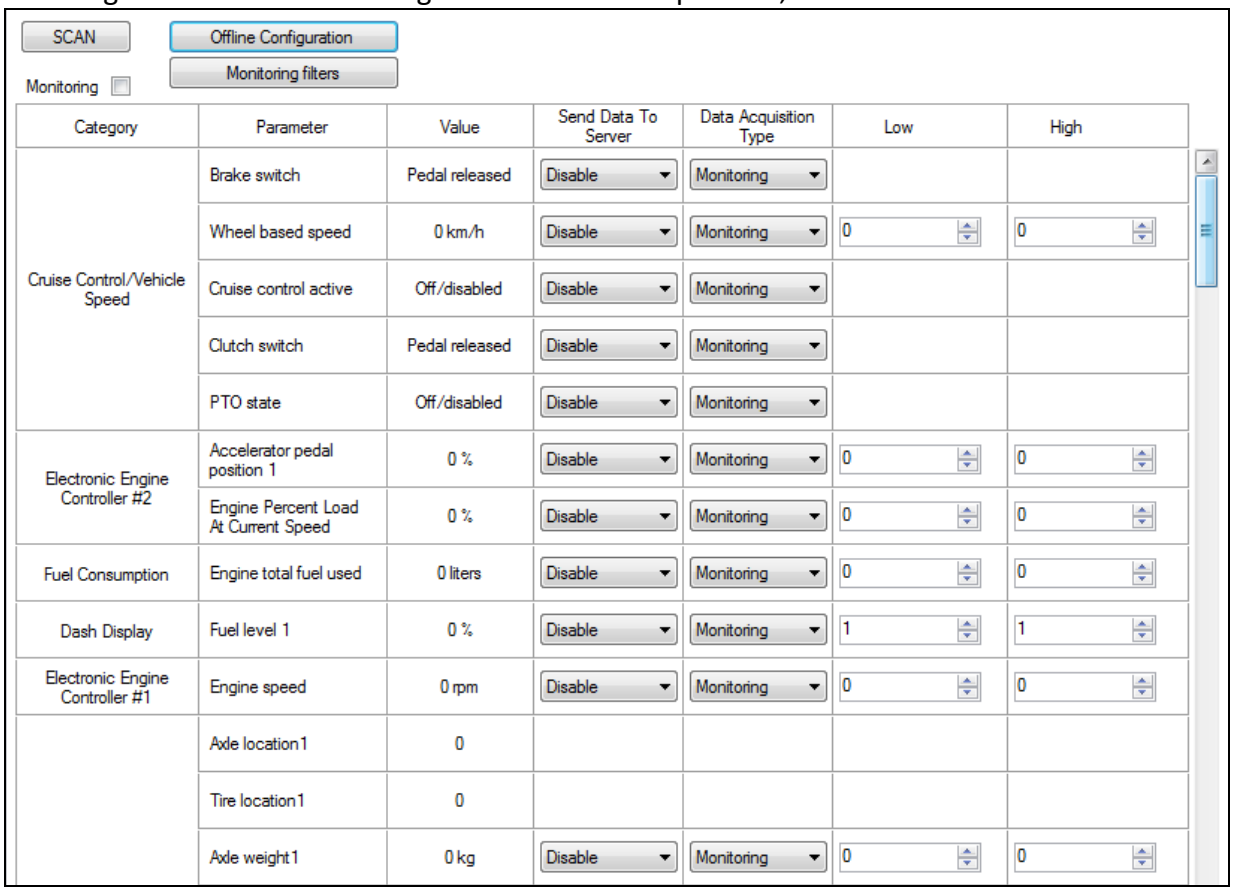

Category	Parameter	Value	Send Data To Server	Data Acquisition Type	Low	High
Cruise Control/Vehicle Speed	Brake switch	Pedal released	Disable	Monitoring		
	Wheel based speed	0 km/h	Disable	Monitoring	0	0
	Cruise control active	Off/disabled	Disable	Monitoring		
	Clutch switch	Pedal released	Disable	Monitoring		
	PTO state	Off/disabled	Disable	Monitoring		
Electronic Engine Controller #2	Accelerator pedal position 1	0 %	Disable	Monitoring	0	0
	Engine Percent Load At Current Speed	0 %	Disable	Monitoring	0	0
Fuel Consumption	Engine total fuel used	0 liters	Disable	Monitoring	0	0
Dash Display	Fuel level 1	0 %	Disable	Monitoring	1	1
Electronic Engine Controller #1	Engine speed	0 rpm	Disable	Monitoring	0	0
	Axle location1	0				
	Tire location1	0				
	Axle weight1	0 kg	Disable	Monitoring	0	0

Figure 71 CAN data table

CAN monitoring

To start CAN bus monitoring mark Monitoring check box. Table of available CAN messages will appear (Figure 71). Data from CAN bus will be updated every 3 seconds. In order to see only desired data open "Monitoring filters" menu (Figure 72**Error! Reference source not found.**).

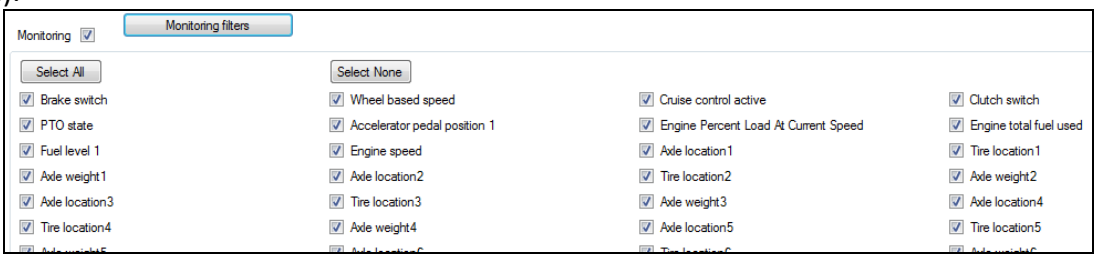

Figure 72 Monitoring filters

Monitoring filters menu allows choosing which data will be shown in configuration menu. To enable/disable particular data monitoring use checkbox next to data name. To enable all data monitoring push “Select all” button, to disable all data monitoring push “Select none” button.

Note: CAN monitoring is FM5300 configurator function; it does not enable data sending to server. In order to configure data sending to server refer to Configuration section.

Offline configuration

When FM5300 device is not connected to CAN bus you can configure CAN data sending by pushing “Offline configuration” button. When offline configuration is enabled a configuration table of all FMS standard CAN data is shown.

AutoCAN ID list

Table 47 AutoCAN ID list

Category	Par Nr in P:FMS:	Par Nr. In P:FMSDAT:	Name	Size, B	Value type	Param IO ID	Value range	SAE-J1939 /71, SPN
65265 – Cruise Control/Vehicle Speed	1	1	Brake switch	1	U8	79	[0-1]. More info.	597
	2	2	Wheel based speed	4	U32	80	[0-256] km/h). More info.	84
	3	3	Cruise control active	1	U8	81	[0-1]. More info.	595
	4	4	Clutch switch	1	U8	82	[0-1]. More info.	598
	5	5	PTO state	1	U8	83	[0-31]. More info.	976
61443 – Electronic Engine Controller #2	6	6	Accelerator pedal position 1	4	U32	84	[0-102] (%). More info.	91
	7	7	Engine Percent Load At Current Speed	1	U8	85	[0-125] (%). More info.	92
65257 – Fuel Consumption	8	8	Engine total fuel used	4	U32	86	[0 – 2105540607] (Liters). More info.	250
65276 – Dash Display	9	9	Fuel level 1	4	U32	87	[0-102] (%). More info.	96
61444 – Electronic Engine Controller #1	10	10	Engine speed	4	U32	88	[0 –8031] (rpm). More info.	190
65258 – Vehicle Weight	[11-25] (Tire No 1–15)	11	Axle location	1	U8	-	1-15	928
			Tire location	1	U8	-	1-15	928
			Axle weight	4	U32	[89–103]	[0-32766] (kg). More info.	582
65253 – Engine Hours, Revolutions: HOURS	26	12	Engine total hours of	4	U32	104	[0–214748364]	247

			Operation				(Hours) More info.	
65260 – Vehicle Identification	27	13	Vehicle identification number	Max 24	U8[24]	[105-107]	Max 24 ASCII bytes. More info.	237
64977 – FMS Standard interface	28	14	SW-version supported	4	U8[4]	109	4 ASCII bytes. More info.	2806
	29	15	Diagnostics supported	1	U8	110	[0-3]. More info.	2804
	30	16	Requests supported	1	U8	111	[0-3]. More info.	2805
65217 – High Resolution Vehicle Distance	31	17	High resolution total vehicle distance	4	U32	112	[0–4294967295] (m). More info.	917
65216 – Service Information	32	18	Service distance	4	I32	113	[-160635–167040] (km). More info.	914
65132 – Tachograph	33	19	Vehicle motion	1	U8	114	[0-3]. More info.	1611
	34	20	Driver 2 working state	1	U8	115	[0-7]. More info.	1613
	35	21	Driver 1 working state	1	U8	116	[0-7]. More info.	1612
	36	22	Vehicle overspeed	1	U8	117	[0-3]. More info.	1614
	37	23	Driver 1 time rel. States	1	U8	118	[0-15]. More info.	1617
	38	24	Driver 2 time rel. States	1	U8	119	[0-15]. More info.	1618
	39	25	Driver 1 card	1	U8	120	[0-3]. More info.	1615
	40	26	Driver 2 card X	1	U8	121	[0-3]. More info.	1616
	41	27	Direction indicator	1	U8	122	[0-3]. More info.	1619
	42	28	Tachograph performance	1	U8	123	[0-3]. More info.	1620
	43	29	Handling information	1	U8	124	[0-3]. More info.	1621
	44	30	System event	1	U8	125	[0-3]. More info.	1622
	45	31	Tachograph vehicle speed	2	U16	126	[0-256] (km/h). More info.	1624
65262 – Engine Temperature 1	46	32	Engine coolant temperature	1	I8	127	[-40 –210] °C. More info.	110
65269 – Ambient Conditions	47	33	Ambient AirTemperature	2	I16	128	[-273 –751] °C. More info.	171
65131 – Driver's Identification	48	34	Driver 1 Identification	32	U8[24]	129,130, 113	Max 24 ASCII Bytes . More info.	1625
65131 – Driver's Identification	49		Driver 2 Identification	32	U8[24]	132,133, 134	Max 24 ASCII Bytes. More info.	1626
65266 – Fuel Economy	50	35	Fuel rate	4	U32	135	[0 –3212] (liters/h). More info.	183
	51	36	Instantaneous	4	U32	136	[0 –125]	184

			Fuel Economy				(km/liter). More info.	
64932 – PTO Drive Engagement	52	37	At least one PTO engaged	1	U8	137	[0-3]. More info.	3948
64777 – High Resolution Fuel Consumption (Liquid)	53	38	High resolution engine total fuel used	4	U32	138	[0–4211081] (liter). More info.	5054

Brake switch:
Switch signal which indicates that the driver operated brake foot pedal is being pressed. This brake foot pedal is controlling the vehicles' service brake (total vehicle braking application, not park brakes). It is necessary for safe drivetrain behavior that the switch activates before the physical braking components are activated (i.e. Disengage the cruise control function prior to the activation of friction brakes).
00 – Brake pedal released
01 – Brake pedal pressed
10 – Error
11 – Not Available
Data Length: 2 bits
Resolution: 4 states/2 bit, 0 offset
Data Range: 0 to 3 Operational Range: same as data range
Type: Measured
Supporting information:
PGN 65265
Note: Firmware captures only [0,1] values. [2,3] – are ignored.

Wheel based speed:
Speed of the vehicle as calculated from wheel or tailshaft speed.
Data Length: 2 bytes
Resolution: 1/256 km/h per bit, 0 offset
Data Range: 0 to 250.996 km/h Operational Range: same as data range
Type: Measured
Supporting information:
PGN 65265
Note: Firmware sends data as U32, so value after floating point is ignored. Also value sent to server is already adjusted with bitgain.

Cruise control active:
Cruise control is switched on. It is not ensured that the engine is controlled by cruise control, as in the case of a large driver's demand the engine is controlled by the driver while cruise control is active(maximum selection of cruise control and driver's demand). The cruise control is set to 0 if a switch off condition occurs.
00 – Cruise control switched off
01 – Cruise control switched on
10 – Error
11 – Not available

Data Length: 2 bits
Resolution: 4 states/2 bit, 0 offset
Data Range: 0 to 3 Operational Range: same as data range
Type: Measured
Supporting information:
PGN 65265
Note: Firmware captures only [0,1] values. [2,3] – are ignored.

Clutch switch:
Switch signal which indicates that the clutch pedal is being pressed. It is necessary for a safe drivetrain behavior that the clutch switch is set before the clutch is opened (cruise control function).
00 – Clutch pedal released
01 – Clutch pedal pressed
10 – Error
11 – Not available
Data Length: 2 bits
Resolution: 4 states/2 bit, 0 offset
Data Range: 0 to 3 Operational Range: same as data range
Type: Measured
Supporting information:
PGN 65265
Note: Firmware captures only [0,1] values. [2,3] – are ignored.

PTO state information:
This parameter is used to indicate the current state or mode of operation by the power takeoff (PTO) governor. In lieu of support for PTO Drive Engagement parameters, this parameter may represent the status of a PTO drive. The broadcasting device must ensure that each achieved state is conveyed in at least one message broadcast before a transition to another state is allowed.
00000 Off/Disabled
00001 Hold
00010 Remote Hold
00011 Standby
00100 Remote Standby
00101 Set
00110 Decelerate/Coast
00111 Resume
01000 Accelerate
01001 Accelerator Override
01010 Preprogrammed set speed 1
01011 Preprogrammed set speed 2
01100 Preprogrammed set speed 3
01101 Preprogrammed set speed 4
01110 Preprogrammed set speed 5

01111 Preprogrammed set speed 6
10000 Preprogrammed set speed 7
10001 Preprogrammed set speed 8
10010 PTO set speed memory 1
10011 PTO set speed memory 2
10100-11110 not defined
11111 Not available
Off/Disabled 00000b — Used to indicate that the PTO governor enable switch is in the off position.
Hold 00001b — used to indicate that the PTO governor is active and currently maintaining a captured operating speed.
Remote Hold 00010b — used to indicate that the remote PTO governor is active and the PTO governor is currently maintaining a captured operating speed.
Standby 00011b — used to indicate that the PTO governor device enable switch is in the ON position and it is possible to manage the PTO governor.
Remote Standby 00100b — used to indicate that the remote PTO governor device enable switch is in the ON position and it is possible to manage the PTO governor.

Set 00101b — Used to indicate that the PTO governor is establishing current speed as the operating speed (captured value).
Decelerate/Coast 00110b — Used to indicate that the PTO governor is in the process of ramping down, or coasting, from the current operating speed.
Resume 00111b — Used to indicate that the PTO governor is in the process of resuming the operating speed to a previously captured value.
Accelerate 01000b — Used to indicate that the PTO governor is in the process of ramping up the operating speed.
Accelerator Override 01001b—used to indicate that the PTO governor is active but for the present time the engine is controlled by a large driver's demand.
Preprogrammed PTO Governor Set Speed 1 01010b—used to indicate that the PTO device is establishing a first preprogrammed PTO governor set speed (user programmable) as the current operating speed.
Preprogrammed PTO Governor Set Speed 2 01011b—used to indicate that the PTO device is establishing a second preprogrammed PTO governor set speed (user programmable) as the current operating speed.
Preprogrammed PTO Governor Set Speed 3 01100b —used to indicate that the remote PTO device is establishing a third preprogrammed PTO governor set speed (user programmable) as the current operating speed.
Preprogrammed PTO Governor Set Speed 4 01101b —used to indicate that the remote PTO device is establishing a fourth preprogrammed PTO governor set speed (user programmable) as the current operating speed.
Preprogrammed PTO Governor Set Speed 5 01110b —used to indicate that the remote PTO device is establishing a fifth preprogrammed PTO governor set speed (user programmable) as the current operating speed.

Preprogrammed PTO Governor Set Speed 6 01111b—used to indicate that the remote PTO device is establishing a sixth preprogrammed PTO governor set speed (user programmable) as the current operating speed.
Preprogrammed PTO Governor Set Speed 7 10000b —used to indicate that the remote PTO device is establishing a seventh preprogrammed PTO governor set speed (user programmable) as the current operating speed.
Preprogrammed PTO Governor Set Speed 8 10001b —used to indicate that the remote PTO device is establishing a eighth preprogrammed PTO governor set speed (user programmable) as the current operating speed.
PTO set speed memory 1 10010b —Used to indicate that PTO set speed memory one set state is active.
PTO set speed memory 2 10011b — Used to indicate that PTO set speed memory two set state is active.
Data Length: 5 bits
Resolution: 32 states/5 bit, 0 offset
Data Range: 0 to 31 Operational Range: same as data range
Type: Status
Supporting information:
PGN 65265
Note: Firmware captures full data range [0x00..0x1F]. All states.

Accelerator pedal position 1:
The ratio of actual position of the analog engine speed/torque request input device (such as an accelerator pedal or throttle lever) to the maximum position of the input device. This parameter is intended for the primary accelerator control in an application. If an application has only one accelerator control, use SPN 91.
For on-highway vehicles, this will typically be the operator's accelerator pedal. Although it is used as an input to determine powertrain demand, it also provides anticipatory information to transmission and ASR algorithms about driver actions.
In marine applications, this will typically be the operator's throttle lever.
If a low idle validation switch is used in conjunction with accelerator pedal position 1, use Accelerator Pedal Low Idle Switch 1, SPN 558.
Data Length: 1 byte
Resolution: 0.4 %/bit, 0 offset
Data Range: 0 to 100 % Operational Range: same as data range
Type: Measured
Supporting information:
PGN 61443
Note: Firmware sends data as U32 (although it would be enough to send as 1B), so value after floating point is ignored. Also value sent to server is already adjusted with bitgain.

Engine percent load at current speed:
The ratio of actual engine percent torque (indicated) to maximum indicated torque available at the current engine speed, clipped to zero torque during engine braking.
Data Length: 1 byte

Resolution: 1 %/bit, 0 offset
Data Range: 0 to 250 % Operational Range: 0 to 125%
Type: Status
Supporting information:
PGN 61443
Note: Since bitgain is 1%/bit – raw data is sent to server. But, data is limited to max 125 (0x7D). If captured data is higher than 125 (decimal) – data is truncated to 125.

Engine total fuel used:
Accumulated amount of fuel used during vehicle operation.
Data Length: 4 bytes
Resolution: 0.5 L/bit, 0 offset
Data Range: 0 to 2,105,540,607.5 L Operational Range: same as data range
Type: Measured
Supporting information:
PGN 65257
Note: Value sent to server is already adjusted with bitgain. Since data is sent as U32, value after floating point is ignored.

Fuel level 1:
Ratio of volume of fuel to the total volume of fuel storage container.
When Fuel Level 2 (SPN 38) is not used, Fuel Level 1 represents the total fuel in all fuel storage containers. When Fuel
Level 2 is used; Fuel Level 1 represents the fuel level in the primary or left-side fuel storage container.
Data Length: 1 byte
Resolution: 0.4 %/bit, 0 offset
Data Range: 0 to 100 % Operational Range: same as data range
Type: Measured
Supporting information:
PGN 65276
Note: Value sent to server is already adjusted with bitgain. Since data is sent as U32, value after floating point is ignored.

Engine speed:
Actual engine speed which is calculated over a minimum crankshaft angle of 720 degrees divided by the number of cylinders.
Data Length: 2 bytes
Resolution: 0.125 rpm/bit, 0 offset
Data Range: 0 to 8,031.875 rpm Operational Range: same as data range
Type: Measured
Supporting information:
PGN 61444
Note: Value sent to server is already adjusted with bitgain. Since data as sent as U32, value after floating point is ignored.

Axle weight:
Total mass imposed by the tires on the road surface at the specified axle.
Data Length: 2 bytes
Resolution: 0.5 kg/bit, 0 offset
Data Range: 0 to 32,127.5 kg Operational Range: same as data range
Type: Measured
Supporting information:
PGN 65258
Note: Value sent to server is already adjusted with bitgain. Data sent to server is a sum of all weights per tire per specific axle [1-15]. I.e. axle[1].total_weight, axle[2].total_weight etc. Since data is sent as U32, value after floating point is ignored.

Engine total hours of operation:
Accumulated time of operation of engine.
Data Length: 4 bytes
Resolution: 0.05 hour/bit, 0 offset
Data Range: 0 to 210,554,060.75 hour. Operational Range: same as data range
Type: Measured
Supporting information:
PGN 65253
Note: Value sent to server is already adjusted with bitgain. Since data as sent as U32, value after floating point is ignored.

Vehicle identification number:
Vehicle Identification Number (VIN) as assigned by the vehicle manufacturer.
NOTE The ASCII character "*" is reserved as a delimiter.
Data Length: Variable – up to 200 characters ("*" delimited)
Resolution: ASCII, 0 offset
Data Range: 0 to 255 per byte Operational Range: same as data range
Type: Measured
Supporting information:
PGN 65260
Note: Firmware expects VIN to fit into 24 bytes. According to captured VIN length either 1/2/3 IO ID's will be sent to server (8 Bytes each). I.e. if VIN length <= 8, only one IO ID (105) will be sent to server, if VIN length >9 and <= 16, then two IO ID's will be sent to server (105,106), and if VIN length > 16 and <= 24 then three IO ID's will be sent to server (105,106,107).

FMS-standard SW version supported:
Information that identifies which issue level of the FMS-standard document the software included in the FMS gateway
supports. Four bytes, representing xx.yy type revision level identification.
Information to be ASCII equivalent of the numeric revision level of the FMS document, 00.01 to 99.99. The first released version will be 01.00.
Note:

Byte 2 and byte 3 represents the SW version supported for trucks. Version number in the format ab.cd where Byte 2 represents “a” ASCII and Byte 3 represents “b” ASCII.
Byte 4 and byte 5 represents the SW version supported for bus and coaches; version number in the format ab.cd where
Byte 4 represents “c” ASCII and Byte 5 represents “d” ASCII.
Data Length: 4 bytes
Resolution: ASCII, 0 offset
Data Range: 0 to 255 per byte Operational Range: same as data range
Type: Measured
Supporting information:
PGN 64977
Note: Firmware sends 4 bytes, which should be interpreted as xx.yy.

FMS-standard diagnostics supported:
Status signal which indicates if the FMS Vehicle Interface (FMS Gateway) supports the handling of diagnostic messages from the vehicle network onto the FMS network.
The FMS gateway does NOT support the re-broadcast of diagnostics messages present on the vehicle network.
If this ‘FMS-standard Diagnostics Supported’ feature is supported by the FMS Gateway, the FMS Gateway will support the requests for diagnostics information (from the FMS device) onto the vehicle network and pass the responses onto the FMS network.
Note: This feature of the FMS Gateway is independent of the ‘FMS-standard Requests Supported’. The FMS Gateway may support diagnostics without supporting the ‘FMS-standard Requests Supported’ function, or visa-versa.

00 Diagnostics Is Not Supported
01 Diagnostics Is Supported
10 Reserved
11 Don’t care
Data Length: 2 bits
Resolution: 4 states/2 bit, 0 offset
Data Range: 0 to 3 Operational Range: same as data range
Type: Status
Supporting information:
PGN 64977

Note: Firmware captures all values [0x00-0x03].

FMS-standard requests supported:
Status signal which indicates if the FMS Vehicle Interface (FMS Gateway) will respond to requests from the FMS device for the PGNs listed in the FMS Interface Specification.
This mode is to support FMS gateway devices that only operate in a ‘Request’ mode.
The FMS PGNs may also be broadcast periodically in this mode.
The FMS Gateway will NOT support the requests for information not included in the FMS Interface Specification onto the vehicle network.”
00 On request mode is not supported
01 On request mode is supported

10 Reserved
11 Don't care
Data Length: 2 bits
Resolution: 4 states/2 bit, 0 offset
Data Range: 0 to 3 Operational Range: same as data range
Type: Status
Supporting information:
PGN 64977
Note: Firmware captures all values [0x00-0x03].

High resolution total vehicle distance:
Accumulated distance traveled by the vehicle during its operation.
NOTE – See SPN 245 for alternate resolution.
Data Length: 4 bytes
Resolution: 5 m/bit, 0 offset
Data Range: 0 to 21,055,406 km Operational Range: same as data range
Type: Measured
Supporting information:
PGN 65217
Note: Value sent to server is already adjusted with bitgain.

Service distance:
The distance which can be traveled by the vehicle before the next service inspection is required. A negative distance is transmitted if the service inspection has been passed. The component that requires service is identified by the service component identification (see SPN 911-913, 1379, and 1584).
Data Length: 2 bytes
Resolution: 5 km/bit, -160,635 km offset
Data Range: -160,635 to 160,640 km Operational Range: same as data range
Type: Measured
Supporting information:
PGN 65216
Note: Value sent to server is already adjusted with bitgain.

Vehicle motion:
Indicates whether motion of the vehicle is detected or not.
00 Vehicle motion not detected
01 Vehicle motion detected
10 – Error
11 – Not available
Data Length: 2 bits
Resolution: 4 states/2 bit, 0 offset
Data Range: 0 to 3 Operational Range: same as data range
Type: Measured
Supporting information:

PGN 65132
Note: Firmware captures all values [0x00-0x03].

Driver 1/2 working state:
State of work of the driver.
000 Rest – sleeping
001 Driver available – short break
010 Work – loading, unloading, working in an office
011 Drive – behind wheel
100-101 Reserved
110 Error
111 Not available
Data Length: 3 bits
Resolution: 8 states/3 bit, 0 offset
Data Range: 0 to 7 Operational Range: same as data range
Type: Status
Supporting information:
PGN 65132
Note: Firmware captures all values [0x00-0x07].

Vehicle overspeed:
Indicates whether the vehicle is exceeding the legal speed limit set in the tachograph.
00 No overspeed
01 Overspeed
10 Error
11 Not available
Data Length: 2 bits
Resolution: 4 states/2 bit, 0 offset
Data Range: 0 to 3 Operational Range: same as data range
Type: Measured
Supporting information:
PGN 65132
Note: Firmware captures all values [0x00-0x03].

Driver 1/2 time related states:
Indicates if the driver approaches or exceeds working time limits (or other limits).
0000 Normal/No limits reached
0001 Limit #1 – 15 min before 4 ½ h
0010 Limit #2 – 4 ½ h reached
0011 Limit #3 – 15 min before 9 h
0100 Limit #4 – 9 h reached
0101 Limit #5 – 15 min before 16 h (not having 8h rest during the last 24h)
0110 Limit #6 – 16 h reached
0111-1100 Reserved
1101 Other

1110 Error
1111 Not available
Data Length: 4 bits
Resolution: 16 states/4 bit, 0 offset
Data Range: 0 to 15 Operational Range: same as data range
Type: Measured
Supporting information:
PGN 65132
Note: Firmware captures all values [0x00-0x0F].

Driver card, driver 1/2:
Indicates the presence of a driver card
00 – Driver card not present
01 – Driver card present
10 – Error
11 – Not available
Data Length: 2 bits
Resolution: 4 states/2 bit, 0 offset
Data Range: 0 to 3 Operational Range: same as data range
Type: Measured
Supporting information:
PGN 65132
Note: Firmware captures all values [0x00-0x03].
[0x00-0x03] range is valid for all FM5300 FW and FM5302 until and including 01.02.10.Rev.00. Since FM5302.01.02.10.Rev.01 only these values are taken [0x00-x02]. I.e. not available state is ignored.

Direction indicator:
Indicates the direction of the vehicle.
00 – Forward
01 – Reverse
10 – Error
11 – Not available
Data Length: 2 bits
Resolution: 4 states/2 bit, 0 offset
Data Range: 0 to 3 Operational Range: same as data range
Type: Measured
Supporting information:
PGN 65132
Note: Firmware captures all values [0x00-0x03].

Tachograph performance:
Indicates the tachograph performance; including electronic or mechanical analysis, instrument analysis, speed sensor analysis, mass storage analysis, and printer analysis.
00 – Normal performance

01 – Performance analysis
10 – Error
11 – Not available
Data Length: 2 bits
Resolution: 4 states/2 bit, 0 offset
Data Range: 0 to 3 Operational Range: same as data range
Type: Status
Supporting information:
PGN 65132
Note: Firmware captures all values [0x00-0x03].

Handling information:
Indicates that handling information is present. Information could include “no printer paper”, “no driver card”, etc.
00 – No handling information
01 – Handling information
10 – Error
11 – Not available
Data Length: 2 bits
Resolution: 4 states/2 bit, 0 offset
Data Range: 0 to 3 Operational Range: same as data range
Type: Status
Supporting information:
PGN 65132
Note: Firmware captures all values [0x00-0x03].

System event:
Indicates that a tachograph event has occurred. This may include power supply interruption, interruption of the speed sensor, incorrect data on the driver card, driving without a driver card, illegal removal of a driver card, insertion of a driver card during driving, and time adjustment.
00 – No tachograph event
01 – Tachograph event
10 – Error
11 – Not available
Data Length: 2 bits
Resolution: 4 states/2 bit, 0 offset
Data Range: 0 to 3 Operational Range: same as data range
Type: Status
Supporting information:
PGN 65132
Note: Firmware captures all values [0x00-0x03].

Tachograph vehicle speed:
Speed of the vehicle registered by the tachograph.
Data Length: 2 bytes

Resolution: 1/256 km/h per bit, 0 offset
Data Range: 0 to 250.996 km/h Operational Range: same as data range
Type: Measured
Supporting information:
PGN 65132
Note: Since FM FW sends this parameter as U16 (2 Bytes), value after floating point is discarded. So data limit becomes [0-250]. This parameter could be send as 1Byte IO (as [0-250] fits into 1B, but it is sent as 2B).
Firmware sends value which is already adjusted with bitgain.

Engine coolant temperature:
Temperature of liquid found in engine cooling system.
Data Length: 1 byte
Resolution: 1 deg C/bit, -40 deg C offset
Data Range: -40 to 210 deg C Operational Range: same as data range
Note: This parameter is to be interpreted as either a uint8_t or a int8_t, depending on the binary value. Values from 0x00 up to and including 0xD2 are of the type uint8_t (unsigned integer). Values from 0xD3 up to and including 0xFF are of the type int8_t (signed integer, two's complement). The value sent to the server has already been adjusted for the bitgain and offset.

Ambient air temperature:
Temperature of air surrounding vehicle.
Data Length: 2 bytes
Resolution: 0.03125 deg C/bit, -273 deg C offset
Data Range: -273 to 1735 deg C Operational Range: same as data range
Type: Measured
Supporting information:
PGN 65269
Note: Firmware sends value which is already adjusted with bitgain.

Driver 1/2 identification:
Used to obtain the driver identity.
Data Length: Variable ("*" delimited)
Resolution: ASCII, 0 offset
Data Range: 0 to 255 per byte Operational Range: same as data range
Type: Measured
Supporting information:
PGN 65131
Note: Firmware expects driver identification to fit into 24 bytes. According to captured driver ID length either 1/2/3 IO ID's will be sent to server (8 Bytes each). I.e. if driver ID length <= 8, only one IO ID (129) will be sent to server, if VIN length >9 and <= 16, then two IO ID's will be sent to server (129,130), and if driver ID length > 16 and <= 24 then three IO ID's will be sent to server (129,130,131).

Engine fuel rate:

Amount of fuel consumed by engine per unit of time.
Data Length: 2 bytes
Resolution: 0.05 L/h per bit, 0 offset
Data Range: 0 to 3,212.75 L/h Operational Range: same as data range
Type: Measured
Supporting information:
PGN 65266
Note: Since FW sends this parameter as U32, value after floating point is discarded. Data limit becomes [0-3,212]. Firmware sends value which is already adjusted with bitgain.

Engine instantaneous fuel economy:
Current fuel economy at current vehicle velocity.
Data Length: 2 bytes
Resolution: 1/512 km/L per bit, 0 offset
Data Range: 0 to 125.5 km/L Operational Range: same as data range
Type: Measured
Supporting information:
PGN 65266
Note: FW sends this parameter as U32, value after floating point is discarded. Data limit becomes [0-125]. This could have been 1 B IO element, but it is 4 B. Firmware sends value which is already adjusted with bitgain.

At least one PTO engaged:
Indicates that at least one PTO is engaged
00 No PTO drive is engaged
01 At least one PTO drive is engaged
10 Error
11 Not available
Note: This parameter should only be sent by the controller that has knowledge of all PTO drives on the vehicle (e.g, the FMS gateway). Individual PTO drive controllers should broadcast this parameter as “not available”.
Data Length: 2 bits
Resolution: 4 states/2 bit, 0 offset
Data Range: 0 to 3 Operational Range: same as data range
Type: Status
Supporting information:
PGN 64932
Note: Firmware captures all values [0x00-0x03].

High resolution engine total fuel used:
Note: Firmware sends value which is already adjusted with bitgain.

12.5 AutoCAN Configuration over SMS

SMS command format:

"<login><space><password><space>setparam<space><Parameter ID><space><value>"

if there is no login and password configured in FM configuration, 2 spaces must be used before command :

<space><space><command>.

Parameter ID explanation:

20090

1st digit represents Profile number.

2nd digit is not used.

3rd and 4th digits represents AutoCAN element ID.

5th digit represent AutoCAN element parameter.

AutoCAN element Ids

Category name	Element ID	Element name
65265 – Cruise Control/Vehicle Speed	00	Brake switch
	01	wheel based speed
	02	cruise control active
	03	clutch switch
	04	PTO state
61443 – Electronic Engine Controller #2	05	Accelerator pedal position 1 X
	06	Engine Percent Load At Current Speed X
65257 – Fuel Consumption	07	Engine total fuel used
65276 – Dash Display	08	fuel level 1 X
61444 – Electronic Engine Controller #1	09	Engine speed X
65258 – Vehicle Weight **	10-24	Axle location
		Tire location
		Axle weight
65253 – Engine Hours, Revolutions: HOURS	25	Engine total hours of Operation X
65260 – Vehicle Identification	26	vehicle identification number X
64977 – FMS Standard interface	27	SW-version supported X
	28	Diagnostics supported X
	29	Requests supported X
65217 – High Resolution Vehicle Distance	30	High resolution total vehicle distance X
65216 – Service Information	31	Service distance
65132 – Tachograph	32	Vehicle motion X
	33	driver 2 working state X
	34	driver 1 working state X

	35	Vehicle overspeed
	36	Driver 1 time rel. states
	37	Driver 2 time rel. states
	38	Driver 1 card X
	39	Driver 2 card X
	40	Direction indicator
	41	Tachograph performance X
	42	Handling information X
	43	System event X
	44	Tachograph vehicle speed X
65262 – Engine Temperature 1	45	engine coolant temperature X
65269 – Ambient Conditions	46	Ambient Air Temperature X
65131 – Driver's Identification	47	Driver 1 Identification
65131 – Driver's Identification	48	Driver 2 Identification X
65266 – Fuel Economy	49	Fuel rate X
	50	Instantaneous Fuel Economy X
64932 – PTO Drive Engagement	51	At least one PTO engaged
64777 – High Resolution Fuel Consumption (Liquid)	52	High resolution engine total fuel used

AutoCAN element parameters

AutoCAN Element parameter ID	Description	Parameter Value
XXXX0	Sets "Send Data to Server" parameter	0 – Disable
		1 – On Low Priority
		2 – On High Priority
		3 – On Panic
XXXX1	Unused	
XXXX2	"High Level" parameter	Range [0 – 2147483647]
XXXX3	"Low Level" parameter	Range [0 – 2147483647]
XXXX4	"Data cquisition Type" parameter	0 – Monitoring
		1 – On Change
		2 – Hysteresis
		3 – Event on Exit
		4 – Event On Entrance
		5 – Event On Both

Example of AutoCAN parameter configuration over SMS:

Configuration of AutoCAN element "**Engine Speed",** [Element ID = 09]

Example SMS:

[login] [pass] setparam 20090 2 – Set “High Priority Event”
[login] [pass] setparam 20092 500 – Set “High Level” to 500
[login] [pass] setparam 20093 200 – Set “Low Level” to 200
[login] [pass] setparam 20094 3 – Set “Event On Exit”

Parameter value reading

AutoCAN parameter has the same ranges when reading. Example:
[login] [pass] getparam 20090 [login] [pass] getparam 20092
[login] [pass] getparam 20093 [login] [pass] getparam 20094

RFID

Radio-frequency identification (RFID) is the use of a wireless non-contact system that uses radio-frequency electromagnetic fields to transfer data from a tag attached to an object, for the purposes of automatic identification and tracking. FM5300 can be configured in a way to use with an RFID reader. When an RFID of some sorts (typically a plastic card with a magnetic line) is used with an RFID reader which is connected to FM5300, the device creates a record with the data that the RFID reader has read and can be sent to a server with all other information. RFID ID is activated like an I/O parameter (Figure 73).

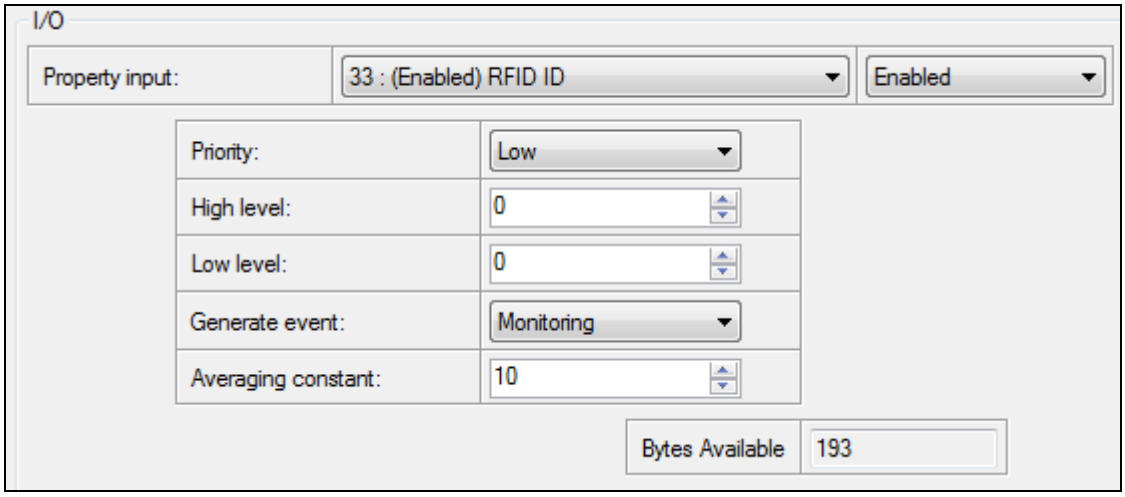

Figure 73 RFID I/O parameter

To set up FM5300 so it can be connected to an RFID reader, Global parameters have to be set up. Go to Global parameters and set up COM1 or COM2 settings to RFID Mode or RFID MF7 Mode (the used mode depends on the mode that the RFID reader works). See Figure 74. The Baudrates for each mode are:

RFID Mode – 57600
RFID MF7 Mode – 9600

You cannot set RFID modes for both COM ports – one has to be chosen – either COM1 or COM2.

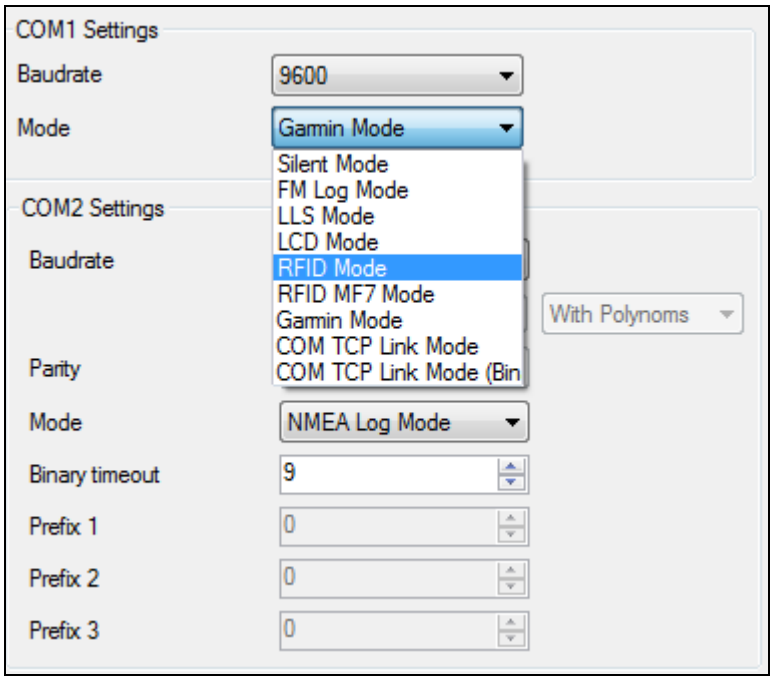

Figure 74 RFID Global parameter settings

The difference between RFID Mode and RFID MF7 Mode is that in RFID Mode FM5300 understands RFID messages that are in hexadecimal format and RFID MF7 Mode understands messages that are in decimal format. For example:

RFID Mode message – *"aa02$03$04$17$89$00$01"*

RFID MF7 Mode message – *"1213141519"*

The chosen mode has to correspond to the RFID reader's mode. What type of RFID is sent to FM5300 depends on the reader.

For more information about RFID ID's and devices, please contact to your local sales representative.

13 GARMIN

Garmin provides a Fleet Management Interface Tool Kit which connected to FM5300 enables the driver to have a „screen" in their vehicle for real-time navigation, messaging, and job dispatch capabilities to help them be more efficient.

FM5300 and Garmin operational scheme is shown in Figure 75 below:

Figure 75 FM53+Garmin operational scheme

13.1 Supported Garmin FMI Protocols

The following is a list of protocols supported and the corresponding feature/benefit. FM5300 can fully support Fleet Management Interface (FMI) versions up to 2.7. Other or higher versions may be supported, but Teltonika is not responsible for the changes made by Garmin, which may affect the work of FM5300 and Garmin products. For more information about Garmin products and FMI versions, please go to http://www8.garmin.com/solutions/pnd/supportedproducts.jsp. Notice that some Garmin products use different connection cables than others.

Standard protocols

Text Message Protocol:

• Allows text messages sent to device to be displayed in “inbox” on unit.

• Garmin can provide confirmation that message was read.

• Garmin can also provide a yes/no box below the text of the message to enable a simple quick response.

• Messages can be up to 199 characters in length.

• Messages can also be generated from device and sent to dispatch/office.

• Messages received will be notified to driver through a pop-up alert on Garmin screen.

• Garmin provides a “virtual keyboard” on device through a touch-screen format for all text communication.

Stop (Destination) Protocol:

• Garmin can display a list of Stops/Jobs reported to the device in a separate icon called “My Stops”.

• Driver has ability to navigate directly to Stop from list.

• Garmin can provide status on current Stop in progress.

• Is driver stopped at location?

• How far has Driver progressed through the list of Stops?

• Garmin can also provide confirmation that driver has received a particular Stop, read the details, or deleted it from list.
• Can provide confirmation that a Stop has been completed.

Estimated Time of Arrival Protocol:
• Dispatcher/office can request the ETA of the current stop/job in progress.
• Garmin will notify the actual time of arrival as well as distance remaining to stop.

Auto-Arrival at Stop Protocol:
• This feature is used to tell the Garmin PND to automatically detect that it has arrived at a Stop and then to prompt the driver if they would like to mark the stop as done and begin navigating to next Stop on the list.
• Auto-arrival can be determined by how long the unit is stopped close to the destination (in the event driver has to park and walk) or by how close the unit needs to be to the destination before the Auto-arrival feature is activated.

Data Deletion Protocol:
• Dispatch/office has the ability to wipe clean the data on the Garmin PND.
• Clean up messages in inbox/remove stops.

Enhanced protocols

Canned Responses/Messages:
• Fleet managers can communicate by sending up to 200 “canned” responses from server to be stored directly on Garmin devices.
• Up to 50 of these canned responses can be utilized for any given scenarios.
• Drivers can store up to 120 canned messages, eliminating the need to type while driving.

Status Protocol:
• Up-to-the-minute communications that allow drivers to automatically send status updates.
• Driver’s units can store up to sixteen status indicators such as start/stop shift, on/off break, etc.

13.2 Supported features on Tavl client application

Tavl client application lets user to use the following features of GARMIN FMI:
1. Text messaging.
2. Destination message.
3. ETA request.

13.3 Text messaging

Text messaging feature lets user to communicate with driver (user that uses Garmin device) by sending text messages via GPRS.

13.4 Destination message

Destination message is used to inform a driver of a new destination. When Garmin device receives a destination message from server it displays it as “Stop” to the driver and also gives the driver ability to start navigating to the “Stop” location. New destination in Tavl client is represented as Geozone so new Geozone (as destination) has to be created first.

13.5 ETA request message

ETA (Estimated Time of Arrival) request message is used when user wants to know expected arrival time to currently active destination and distance (in meters) from current object location to currently active destination.

13.6 Connection and pinout

FM5300 RJ-45 (Female)

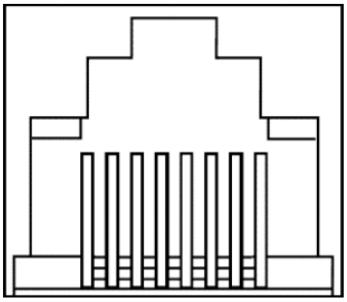

Pin Nr.	Description
1	
2	
3	
4	GND (Black wire)
5	Tx (Yellow wire)
6	Rx (White wire)
7	
8	

Figure 76 RJ45 Pinouts

In order to connect Garmin PND to FM5300, Garmin mode has to be set in Global parameter settings (Figure 77). Simply choose Garmin mode in either COM1 or COM2 settings mode, but you cannot activate Garmin mode in both ports at the same time.

FM5300 is able to filter out some of Garmin FMI packets that are not used in some applications (including Tavl system) and generates additional data transfer at the same time increasing bills of GSM services. In order to enable Garmin FMI Ping Packet Filtering set this feature from Global parameters at the bottom – enable Garmin Ping setting (see Figure 77).

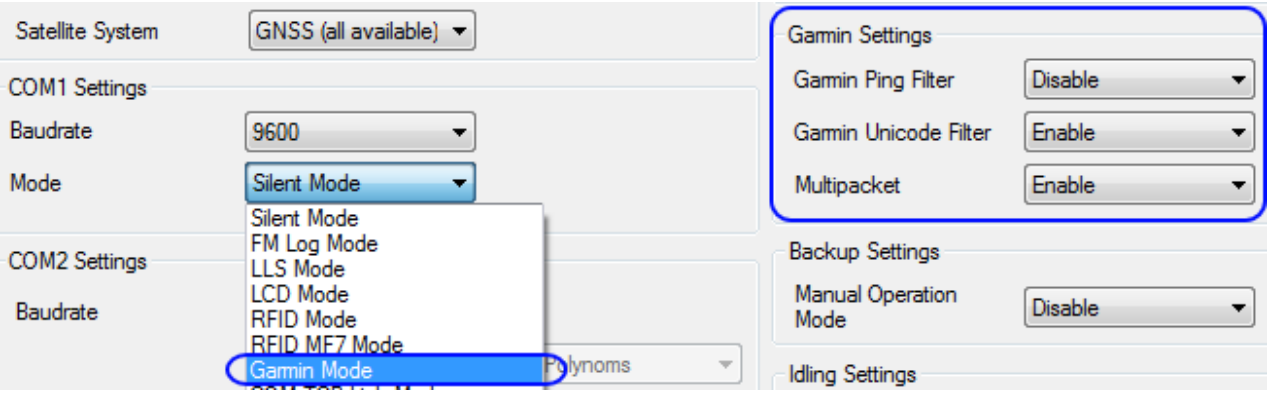

Figure 77 Configuration of Garmin in Global parameter settings

NOTE: Garmin FMI protocols are supported only in TCP data transfer mode.

Garmin Fleet management Interface documentation can be downloaded from Official Garmin web page: http://developer.garmin.com/download/FMI_v2-5.zip.
Software version updates: http://www8.garmin.com/support/download.jsp.

For more information about Garmin PND device connectivity to FM5300 and additional information, please contact to your local sales representative.

14 LLS SENSOR

LLS sensor series liquid level sensors are solid-state capacitive devices with no moving parts. The sensors use capacitive technology to produce accurate liquid level measurements of standard factory grade DIESEL OIL and PURE GASOLINE (BENZINE) carbon fuels.

The LLS sensor liquid level sensors are strictly prohibited to use in any liquids which are not the factory grade carbon fuels or contain: BIOFUEL, METHANOL, ETHANOL, UREA and similar aggressive components in pure form or as additives for factory grade carbon fuels for use in INTERNAL COMBUSTION ENGINES. Operating media – Diesel fuel (oil), pure gasoline (benzene).

IMPORTANT!
The power supply is 10-50 VDC stabilized. The wrong polarity (-) or (+) connection of power supply will damage or destroy the device. Prohibited for test or use in water and any other liquids, which are not factory grade carbon fuels. Fit the plastic insulation cap on the end of the central rod after installation accordingly to installation guide. To be installed, calibrated, tested only by qualified authorized person (installer, technician, mechatronic).

14.1 Specifications

Supply voltage, DC V	10...50*
Current consumption, mA (for 12/24 V)	25/50
Operation temperature, Celsius degrees	-40...+85
Working mode	continuous
Weight, kg	< 2.0
Working pressure	atmospheric

14.2 Hardware

- Operation principle: capacitive.
- Output: RS-232.
- Standard probe lengths: 700, 1000, 1500 mm.
- Optocoupler isolation on both power and signal circuits.

14.3 Connecting LLS to FM5300

In order to use LLS fuel counter the newest firmware version is needed which can be obtained from Teltonika or a representative. Firmware is updated over GPRS or using cable update method (see chapter 4 for more information).

The LLS fuel sensor must be connected to the FM5300 device. The FM5300-LLS fuel sensor schemes are shown below Figure 78.

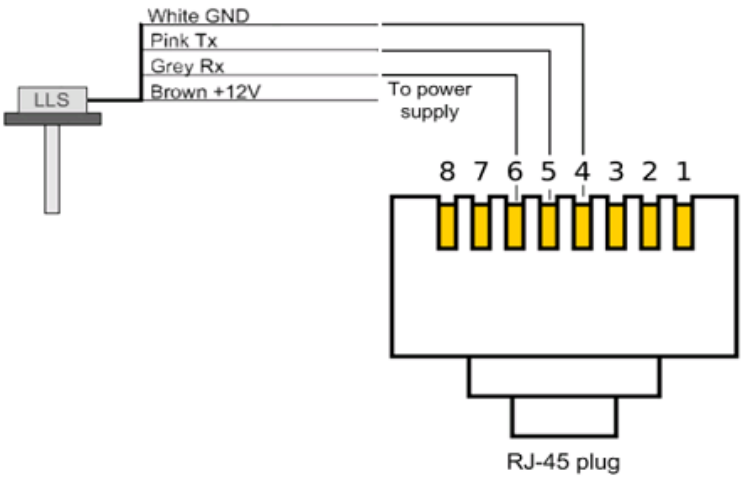

Figure 78 FM5300-LLS fuel sensor connection scheme RJ-45 male plug

*Teltonika is not responsible for any changes made by the manufacturer, which is not declared in fuel level sensor documentation.

Then FM5300 must be configured. Both fuel level and fuel temperature has to be set up by configurator's I/O menu (see Figure 79):

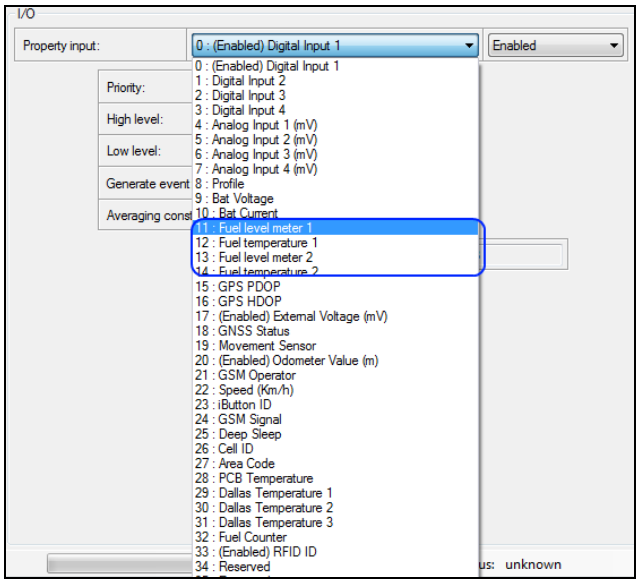

Figure 79 FM5300 I/O Configuration

Enable ID11 and ID12, or ID13 and ID14, or all four I/O elements (Figure 79) at the same time because two LLS sensors can be connected to FM5300 at the same time (for example if a vehicle has two fuel tanks).

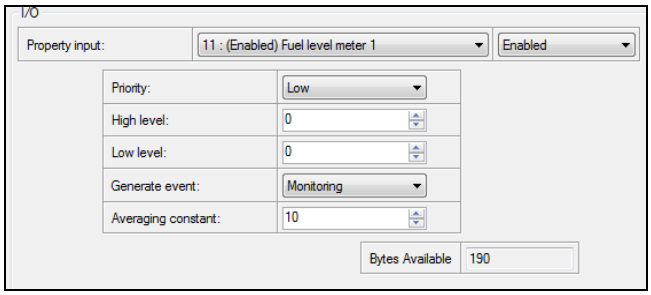

Figure 80 I/O Configuration

Note: FM5300 has the possibility to connect to two LLS sensor devices at the same time, using both COM ports.

When only one LLS sensor is connected FM5300 sends the data in kvants and additional server configuration is required. To get correct data on the server, it has to calculate the values using polynomial calculation. When two LLS sensors are connected the same is applied, but it is possible to enter the polynomials into the configuration of FM5300 and it sends the sum of both LLS sensors, but the data sent is already in liters so no additional calculations have to be made on the server.

No. of LLS sensors	Where polynomials have to be entered
1 (COM1)	On the server (FM5300 sends values from LLS in kvants)
2 (COM1 and COM2)	On the server (FM5300 sends values from LLS in kvants) OR in FM5300 configuration (the device sends the sum of both LLS sensors converted to liters)

Here is an example of how to calibrate LLS sensor and obtain polynomials:

LLS sensor must be put in the intended fuel tank and then configured, using polynomial calculation. The first step is to firmly place the LLS sensor in the fuel tank and calibrate it. The tank should be empty or at least almost empty for the calibration to be successful (or at least as accurate as possible).

IMPORTANT!
Before calibration and calculation of polynomials, make sure that FM5300 polynomial configuration is default. That is all polynomials are 0, except for a1, which is 1. Otherwise, the calculations will be incorrect.

To acquire the correct polynomials a known amount of petrol has to be poured into the fuel tank and the value which is read should be written down. Then another amount should be poured and the next value written down and so on. This should be done till the tank is full. Then the calculation of polynomials has to be made. Here is an example of how to do this, with the values already written down, for example a tank of 150 liters and using an editor program like Microsoft Excel:

The values of the LLS sensor when pouring a known amount of liters into an empty fuel tank are:

Value (kvants, N)	Liters
0	0
90	24
220	42
300	61
400	72
550	84
610	97
690	114
850	138
920	145
1023	150

Note: for more accurate calibration and configuration, the poured liters should not be a high amount (for example three times by 50 liters). Pour a known small amount in order to get the most accurate calculations.

Then, enter these values in Excel and calculate another value N+, according to the formula:

$$N += \frac{N}{100} + 1$$

FM5300 converts the read data using this formula, so we need to have the converted values also. Next, enter the new values in Excel and create a scatter chart, like in Figure 81.

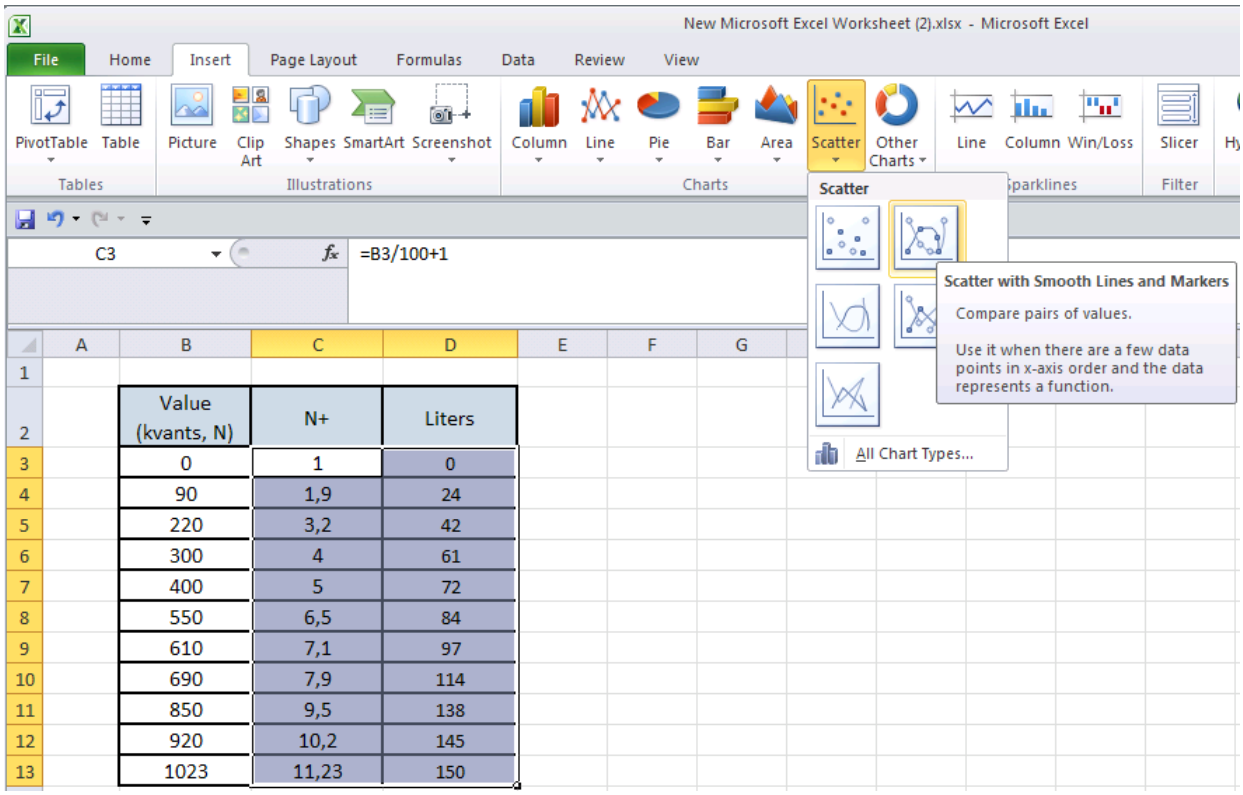

Figure 81 Scatter chart creation

Then right-click on the chart line and select “Add Trendline” (Figure 82).

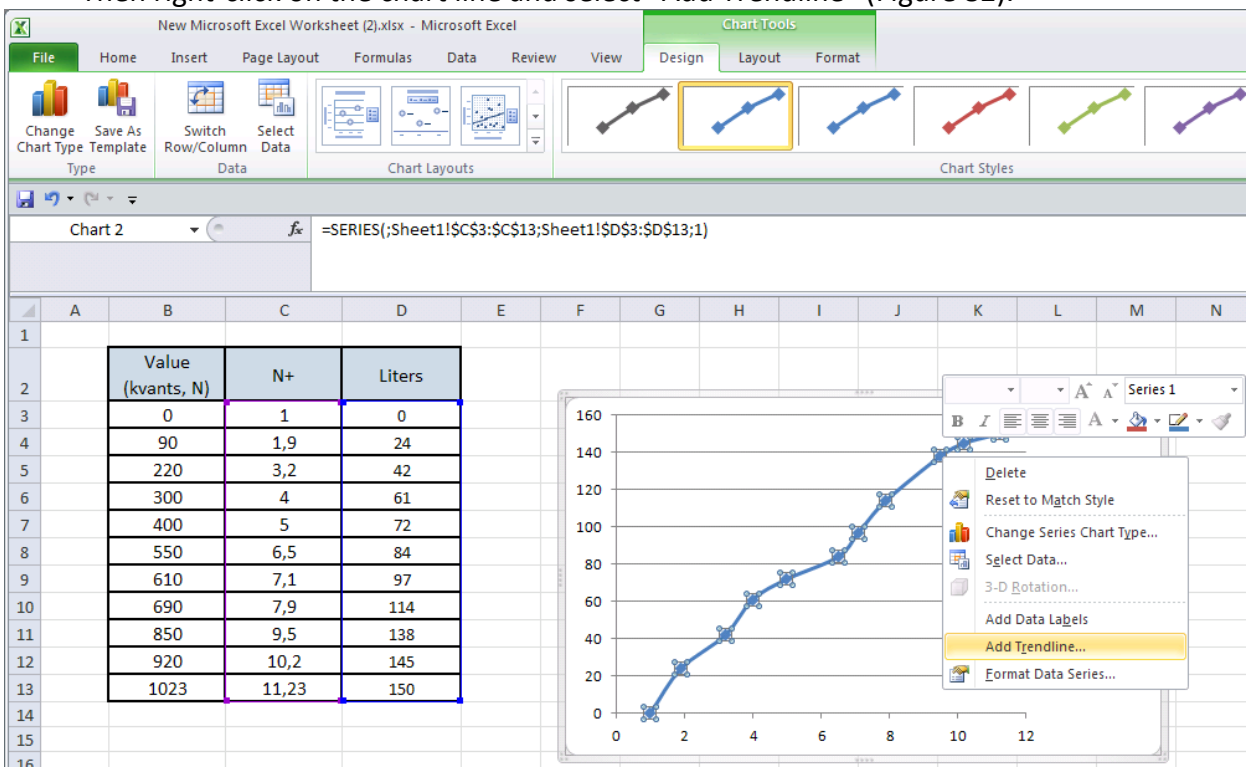

Figure 82 Adding a trendline

Select a polynomial type of 5th order trendline. Also select “Display equation on chart” checkbox (Figure 83).

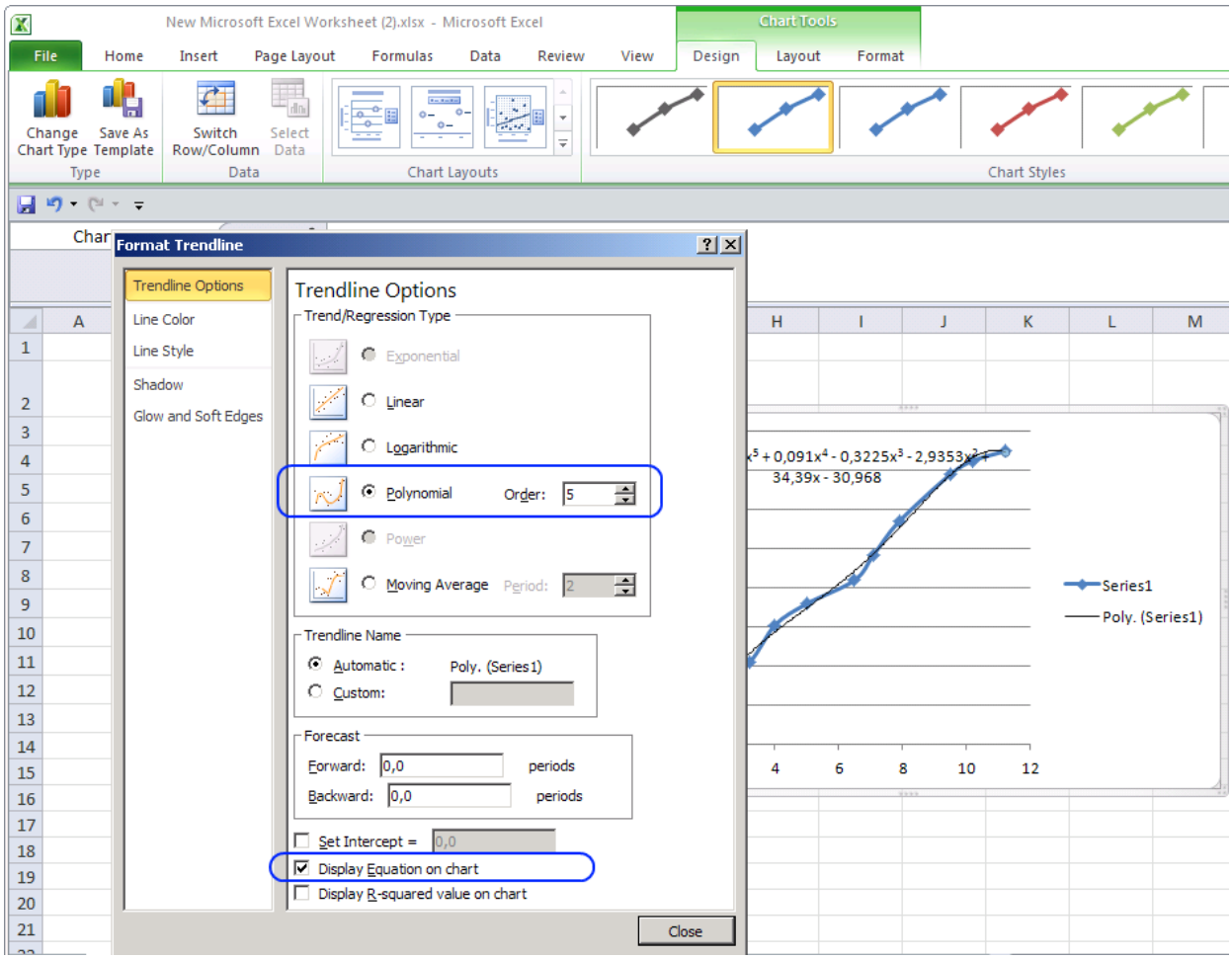

Figure 83 Selecting polynomial order

A new line appears alongside the created one, as well as a formula for that new line (Figure 84).

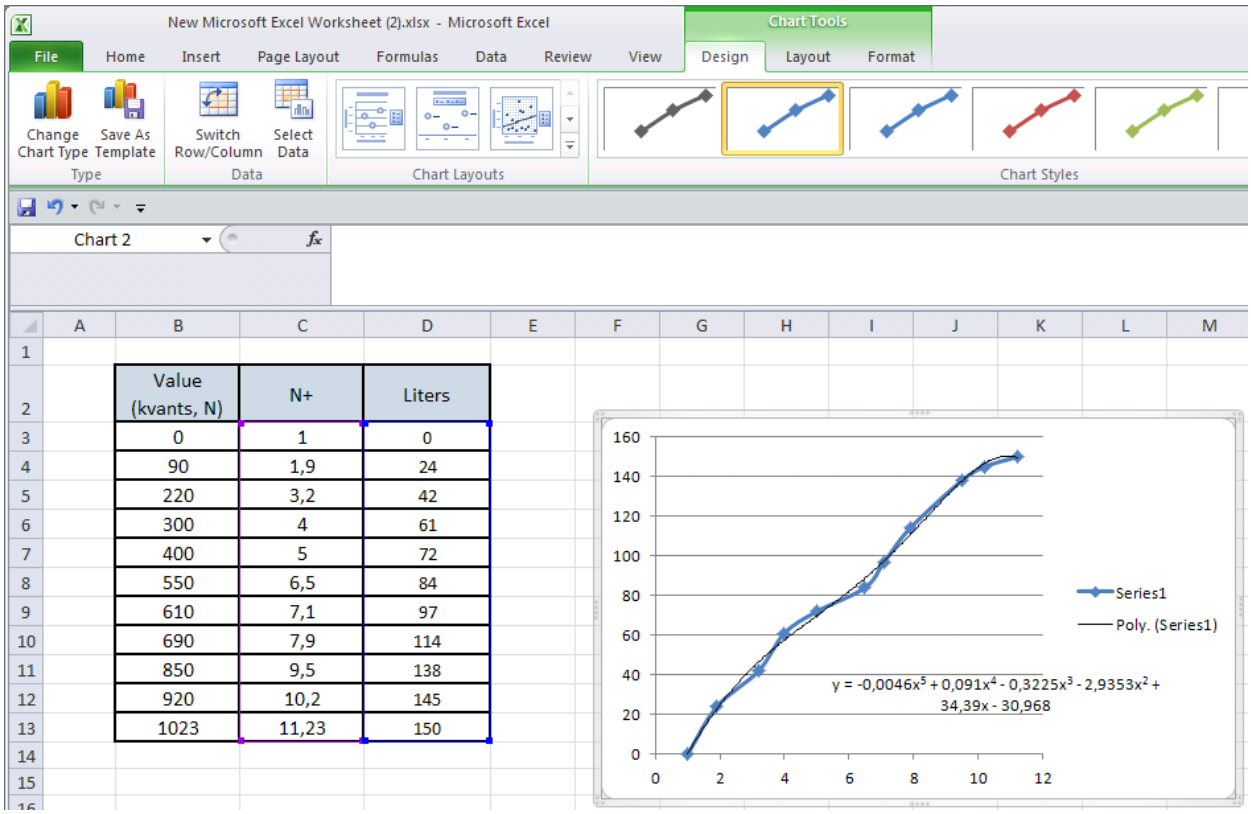

Figure 84 Calculated polynomial line and calculation formula

Final view of the formula should be:

$y = -0{,}0046x^5 + 0{,}091x^4 – 0{,}3225x^3 – 2{,}9353x^2 + 34{,}39x – 30{,}968$

Where

a0= -30,968

a1= 34,39

a2= -2,9353

a3= -0,3225

a4= 0,091

a5= -0,0046

Here, the polynomials a0…a5 have to be written in the polynomial calculation on the server. If it is required for FM5300 to send the data in liters, these polynomials can be written in the configuration of the device. To do this, go to global settings, and choose both ports to work in LLS mode (Figure 85). Also repeat the steps for the second LLS sensor if it is needed.

Note, that depending on fuel tank shape polynomial line can be with negative values.

REMEMBER!

Polynomials can only be written in the configuration when using two LLS sensors at once – if one is used, then the polynomial calculation must be done on the server side.

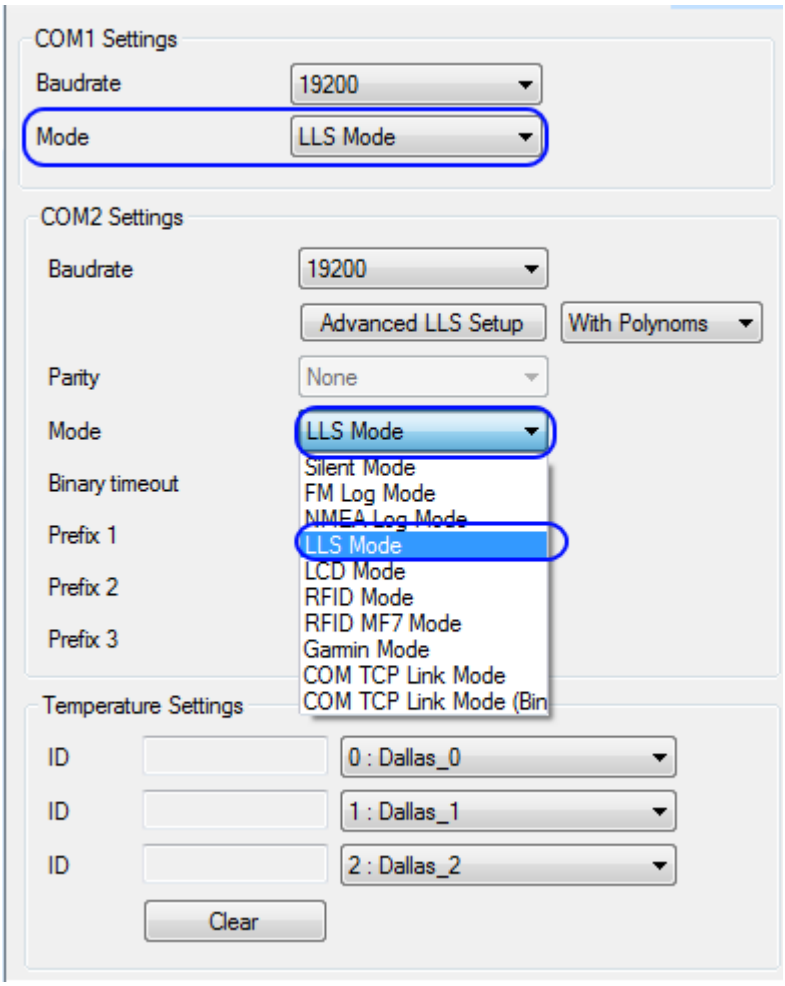

Figure 85 LLS mode settings in Global parameters

Then click "Advanced LLS Setup" in COM2 settings. At the pop upped window (Figure 86) enter the obtained values of a0…a5 in the appropriate places and click "Write Polynoms":

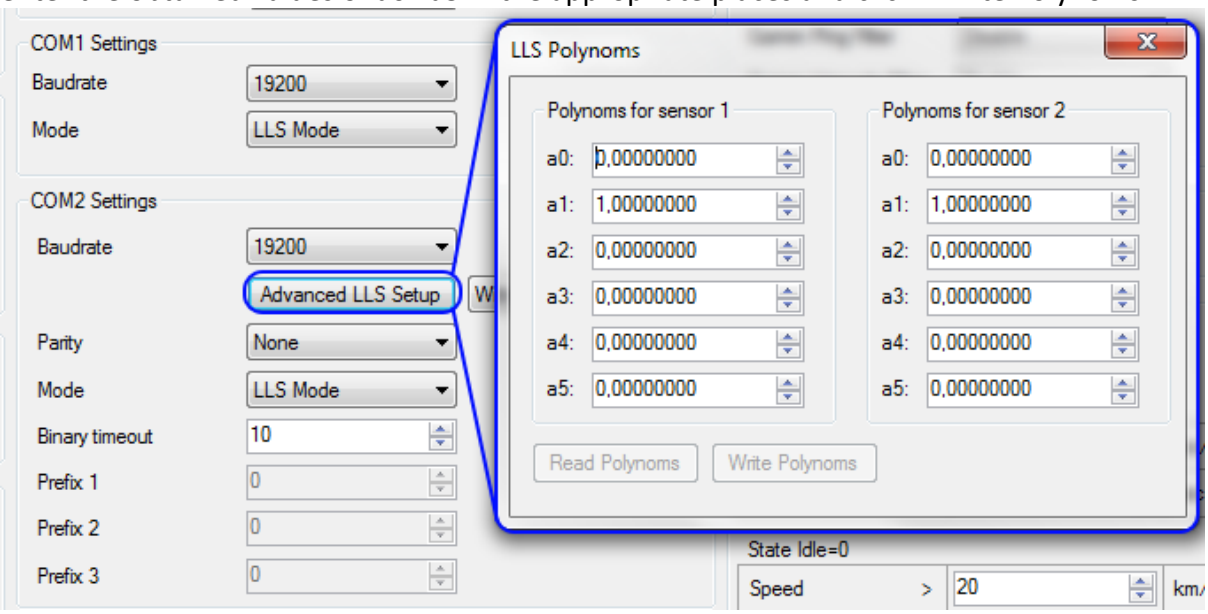

Figure 86 LLS sensor advanced (polynomial) setup

After the configuration is saved successfully FM5300 is ready to send measured fuel level.

For additional information about LLS sensors, their configuration and connectivity to FM5300, please contact us to your local sales representative.

Duel LLS mode works only if LLS mode is selected on both COM1 and COM2.

Possible values:

3. Use of polynoms DISABLED. (**default**)

To server will be send raw LLS values. With ID's 201 and 203.

4. Use of polynoms ENABLED

Polygonoms will be applied on LLS1 and LLS2 values. To server will be send single value with ID 203.

ValueToServer = ApllyPolynom1(LLS1_RAW_VAL) + ApllyPolynom2(LLS2_RAW_VAL);

Note:

Sanity check of polynoms values are still in effect, so if polynoms are invalid then sending will default to RAW LLS values sending.

This solution is working only on FW version 01.07.16 and higher.

ATTENTION!

Some common COM modes can't be activated in the same time with different COM ports. Device connection through COM port to Configurator can be established only in Silent mode and FM log mode regimes. Change COM mode with which device is connected to Configurator can end with failures. COM mode changes can be done only from Silent mode to FM log mode or backwards.

15 GPRS COMMANDS

It is possible to send commands to FM5300 using GPRS. When FM5300 sends records periodically to a server, a message could be sent from the server and FM5300 will reply to it. FM5300 has to be connected to the server in order to receive commands.

Command	Description
#GET DATAORDER	Get info about records sorting parameter
#SET DATAORDERX=Y	Set records sorting parameter, Y – value (0/1).
#GET RECTO	Get info about records refresh timeout parameter
#SET RECTO=X	Set records refresh parameter, X = records refresh timeout
#GET VERSION	Receive firmware version
#GET NETWORK	Get GSM operator to which device is connected
#GET IMSI	Get IMSI of the device
#GET OUT	Get DOUT values
#DO REPORT	Save a record

#DO RESET=XXX	Reset FM5300 or GPS module, XXX – FM5X or GPS
#GET ROAMINGX=Y	Get operator from the list of a certain profile, X – profile, Y – operator number in a list
#SET ROAMINGX=Y,Z	Set operator to the list of a certain profile, X – profile, Y – operator number in a list, Z – operator code (must be written in quotes, example "12345")
#GET REMIPX	Get IP and port number from the configuration of a certain profile, X – profile
#SET REMIPX=Y:Z	Set IP and port number to the configuration of a certain profile, X – profile no, Y – IP or domain, Z – port number
#GET AUPX	Get APN, user login and password from the configuration of a certain profile, X – profile
#SET AUPX=Y,Z,W	Set APN, user login and password to the configuration of a certain profile, X – profile, Y – APN, Z –, user login W – password
#GET REPRTX	Get MinPeriod from the configuration of a certain profile, X – profile
#SET REPRTX=Y	Set MinPeriod to the configuration of a certain profile, X – profile, Y – MinPeriod value
#GET REPDISTX	Get MinDistance from the configuration of a certain profile, X – profile
#SET REPDISTX=Y	Set MinDistance to the configuration of a certain profile, X – profile, Y – MinDistance value
#GET REPANGX	Get MinAngle from the configuration of a certain profile, X – profile
#SET REPANGX=Y	Set MinAngle to the configuration of a certain profile, X – profile, Y – MinAngle value
#GET SENDPERIODX	Get SendPeriod from the configuration of a certain profile, X – profile
#SET SENDPERIODX=Y	Set SendPeriod to the configuration of a certain profile, X – profile, Y – SendPeriod value
#GET REPMRX	Get MinRecords from the configuration of a certain profile, X – profile
#SET REPMRX=Y	Set MinRecords to the configuration of a certain profile, X – profile, Y – MinRecords value
#GET IBTNX=Y	Get iButton value from the configuration of a certain profile, X – profile, Y – number on the list
#SET IBTNX=Y,Z	Set iButton value to the configuration of a certain profile, X – profile, Y – number on the list, Z – iButton value
#GET EXTERR	Get extended errors value
#SET EXTERR=X	Set extended errors value, X – 0/1

There is also a possibility to send the same messages as in SMS command list (chapter 11). The device sends a response to every command received.

Command	Description
getstatus	Modem Status information
getweektime	Current device time, Day of Week and amount of minutes passed since start of week
getops	List of currently used and available GSM operators

readops#	Emergency gsm operator readout from active profile # - 1,2,3 1 – operators [1-20] 2 – operators [21-40] 3 – operators [41-50]
getnmeainfo	Nmea error debug sms
getcfgtime	Date and Time of last successful configuration
getgps	Current GPS data and time
loadprofile#	Load specified profile into RAM Engine Profile. # - number of profile to load
cpureset	Reset CPU
resetallprof	Reset all FLASH profiles to default profile
getver	Device / Modem / Code version information
getinfo	Device runtime system information
deleterecords	Delete all records saved on FLASH
getio	Readout digital inputs and outputs, analog inputs
readio #	Readout input value according entered ID, # - ID value
setdigout XXXX Y1 Y2 Y3 Y4	Set digital outputs 0 – OFF, 1 – ON Y1 – timeout for DO1 Y2 – timeout for DO2 Y3 – timeout for DO3 Y4 – timeout for DO4
getparam #	Readout parameter value according entered ID. # - ID value.
Setparam # #	Set parameter value according entered ID and Value. 1.# - ID value. 2.# - New Parameter Value
flush #,#,#,#,#,#,#	Initiates all data sending to specified target server 1.# - IMEI 2.# - APN 3.# - LOGIN 4.# - PASS 5.# - IP 6.# - PORT 7.# - MODE (0-TCP/1-UDP)
sn x [x=0;1]	Enable/disable static navigation
banlist	Banlist information
crashlog	Crash log information
delete_all_sms	Delete all read SMS
braminfo	BatRam info
getgnss	Current GNSS information
resetlimits	Resets data counters

ATTENTION!
In order to send these commands, they have to be converted to special format. How to convert to this format and for additional information on how to send GPRS commands, please contact to your local sales representative.

16 DEBUG MODE

FM5300 is able to transmit its current state when connected to PC using PORT1/2 cable. It is used to detect errors and provide information to possible solutions when operating as unexpected. Contact our sales manager to get Terminal. After launching it choose baud rate 115200 and hardware control – none. Click on 'Start Log' button and save a new file. Then click 'Connect' to start receiving messages from FM5300 (see Figure 87).

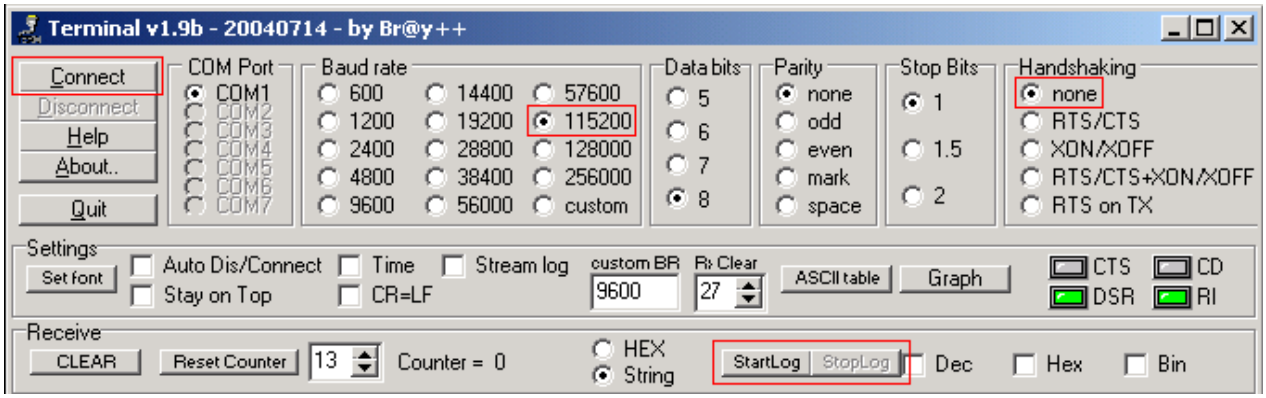

Figure 87 Terminal Window

To debug NMEA GPS data, change baud rate value to 9600 and click connect.

17 FM5300 REMOTE LOG

LOG BOOK

Two types of log book: online, offline.

Online log book is initiated using command *log2srv* and set right configuration. Device establish *GPRS* connection and activates link to server, log started to stream to server until set time is elapsed. To stop streaming immediately *log2srvstop* is used.

Offline log book is initiated using command *log2srv* and set right configuration. Device start log writing to flash, this action is performed until set time is elapsed.

To read offline log *log2srvstart* command is used. It sends log to earlier preconfigured server (*log2srv*). Offline log sending also can be terminated using *log2srvstop* command.

COMMANDS

- *"SMSlogin<space>SMSpassword<space>**log2srv**<space><enable>,<mode>,<APN>,<username>,<password>,<IP>,<port>,<TMO>,<Log mode>"*
  - *<enable> - enable (**1**), disable(**0**);*
  - *<mode> -*
    - *silent (**0**) – connect to server and send "Hello" message (all "Terminal" commands can be used)*
    - *echo_time (**1**) – send log with lines, where is TIME "for example: -[2013.1.23 14:49:45]-[PERIODIC.BAN.LIST.INFO]:"*
    - *echo (**2**) – send log with lines where is no TIME "for example: [DIN1.FUNC]->Waiting for DIN1 to be ON"*
    - *echo/echo_time (**3**) – send full log*
    - *modem (**4**) – send just AT commands*
    - *NMEA (**5**) – send NMEA log.*
  - *<APN> - operators' APN which will be used for data sending;*
  - *<username> - operators' username;*
  - *<password> - operators' password;*
  - *<IP> - servers' IP address to which offline/online log will be send after request ("log2srvstart");*
  - *<port> - servers' port;*
  - *<TMO> - indicates time of offline log writing to flash or online log sending to server;*
  - *<Log mode> - configuration for online mode (0), configuration for offline mode (1);*

- *"SMSlogin<space>SMSpassword<space>**log2srvstart**"*
- *"SMSlogin<space>SMSpassword<space>**log2srvstop**"*

Example: opa opa log2srv 1,3,banga,,,212.47.99.62,7092,300,0

Note: Up to 5 minutes delay could appear if wrong "*log2srv*" commands settings will be sent, during that time no SMS or GPRS command could be received. SMS will be hanging, after timeout, hanging SMS's will be proceeded.

Function have: FM53.Ver.01.02.XX

DOWNLOADING LOG USING "HERCULES"

1 STEP:

- set special chars – ASCII
- Set PORT and start listen (screen below)

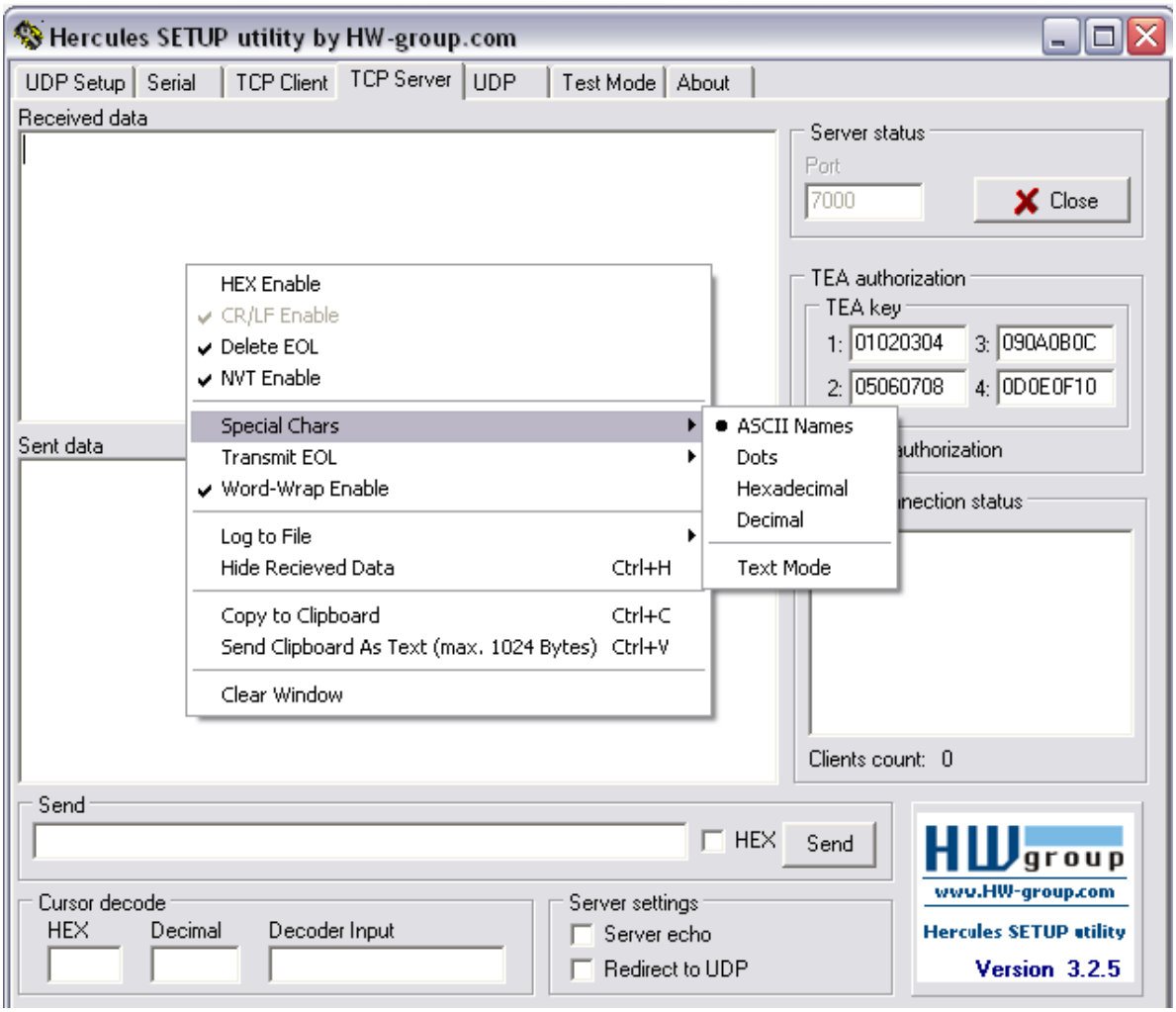

2 STEP

- Set directory for file download
- Enable “Log to file” as show below

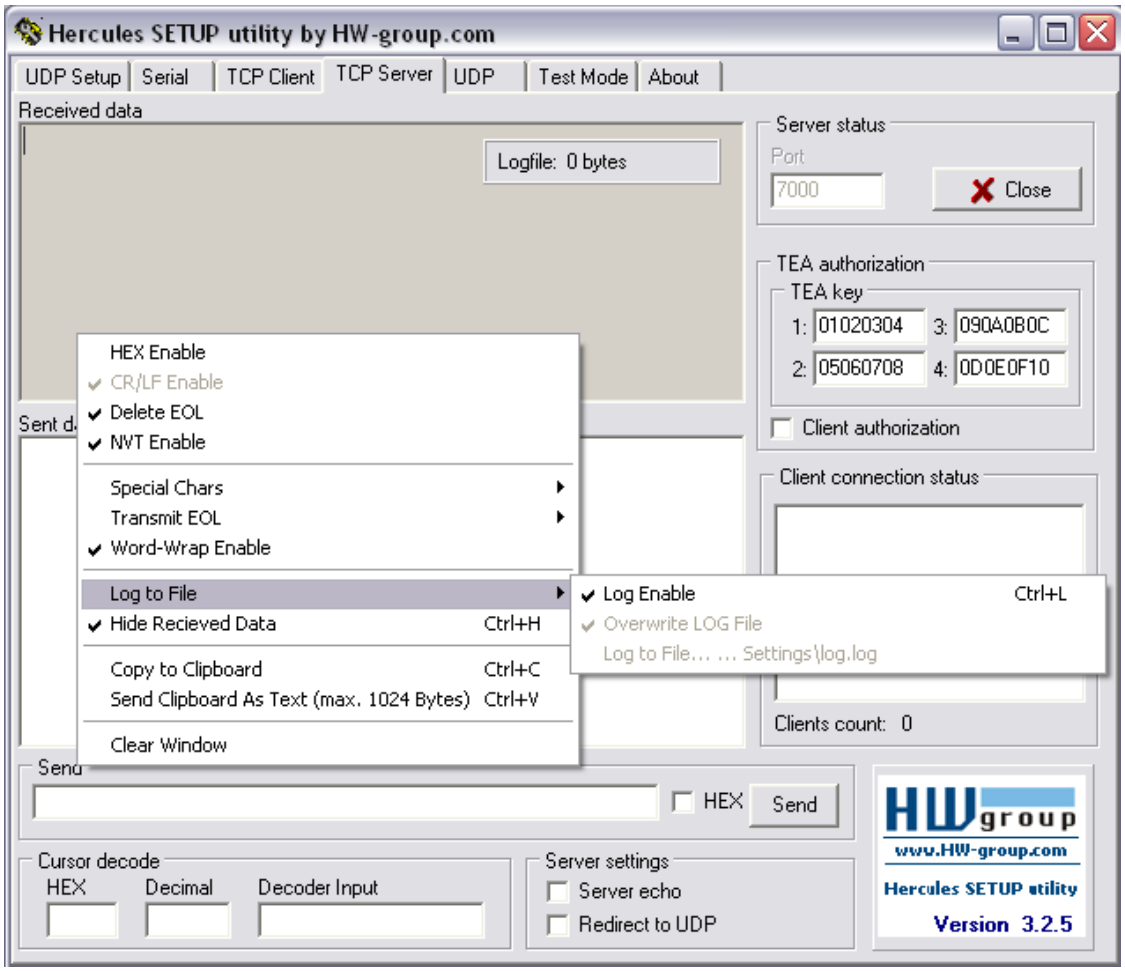

3 STEP

“Terminal” Command sending using Hercules

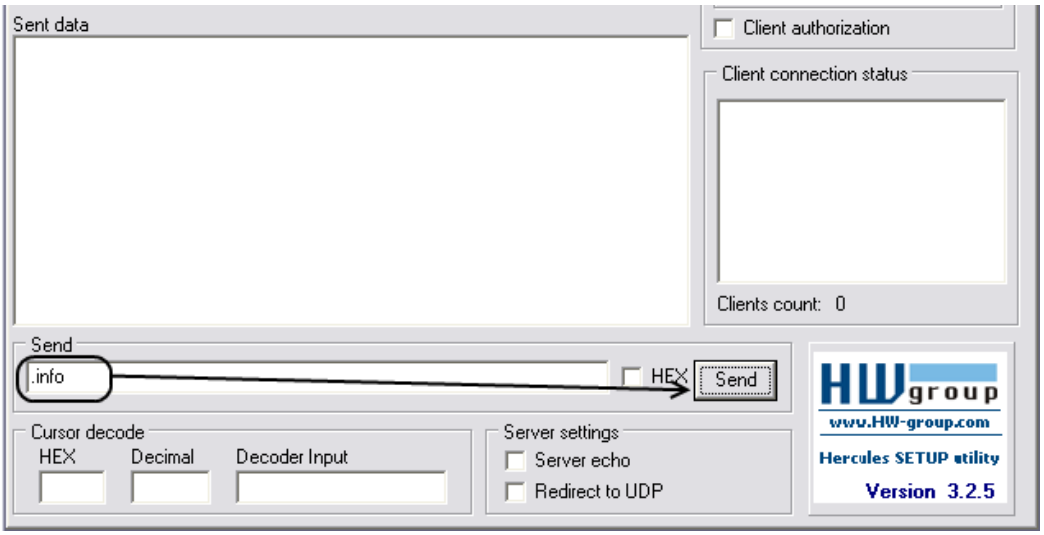

18 MOUNTING RECOMMENDATIONS

18.1 Connecting Wires

- Wires should be connected while module is not plugged in.
- Wires should be fastened to the other wires or non-moving parts. Try to avoid heat emitting and moving objects near the wires.
- The connections should not be seen very clearly. If factory isolation was removed while connecting wires, it should be applied again.
- If the wires are placed in the exterior or in places where they can be damaged or exposed to heat, humidity, dirt, etc., additional isolation should be applied.
- Wires cannot be connected to the board computers or control units.

18.2 Connecting Power Source

- Be sure that after the car computer falls asleep, power is still available on chosen wire. Depending on a car, this may happen in 5 to 30 minutes period.
- When module is connected, be sure to measure voltage again if it did not decrease.
- It is recommended to connect to the main power cable in the fuse box.

18.3 Connecting Ignition Wire

- Be sure to check if it is a real ignition wire – power does not disappear while starting the engine.
- Check if this is not an ACC wire (when key is in the first position, most electronics of the vehicle are available).

- Check if power is still available when you turn off any of vehicles devices.
- Ignition is connected to the ignition relay output. As alternative, any other relay, which has power output, when ignition is on may be chosen.

18.4 Connecting Ground Wire

- Ground wire is connected to the vehicle frame or metal parts that are fixed to the frame.
- If the wire is fixed with the bolt, the loop must be connected to the end of the wire.
- For better contact scrub paint from the place where loop is connected.

18.5 Connecting Antennas

- When placing antennas avoid easily reached places.
- Avoid GPS antenna placement under metal surfaces.
- GPS antenna must be placed so its state is as horizontal as possible (if antenna is leant more than 30 degrees, it is considered incorrect mounting).
- GPS antenna cable cannot be bent more than 80 degrees.
- GPS antenna must be placed sticker facing down

CORRECT

NOT CORRECT

It is recommended to place GPS antenna behind dashboard as close to the window as possible. A good example of GPS antenna placement is displayed in a picture below (area colored green).

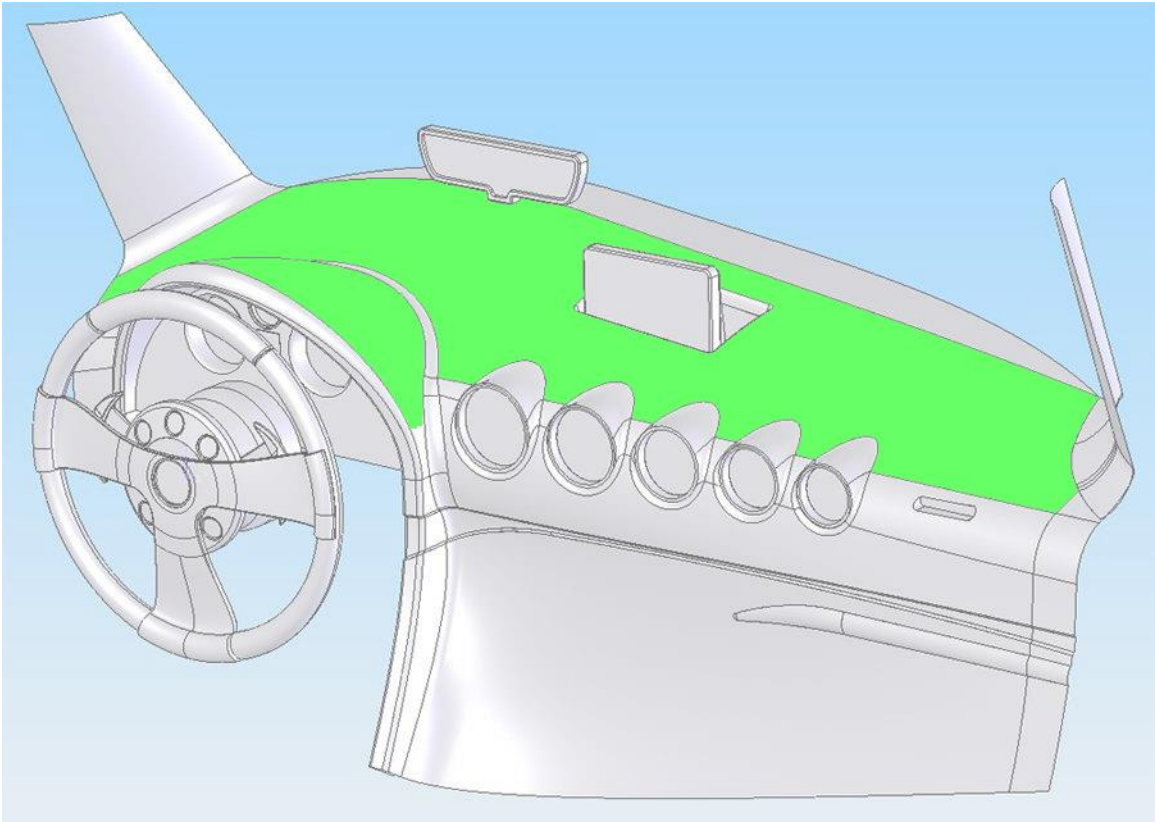

18.6 Module Installation

- Module should not be seen or easily reached.
- Module should be firmly fixed to the surface or cables.
- Module cannot be fixed to heat emitting or moving parts.
- SIM card should be inserted in the module while the connector is plugged off (while module has no power).

19 CHANGE LOG

Nr.	Date	Version	Comments
1	2011-11-19	1.0	Preliminary release draft
2	2011-11-20	1.1	Deleted chapters 9,10
3	2011-11-21	1.2	Added chapter 11 (SMS command list)
4	2011-12-29	1.3	Changed *setdigout* SMS command
5	2012-01-11	1.4	Updated ECO driving/Green driving calibration information
6	2012-01-12	1.5	Description and table changes, removed SMS command "exec"
7	2012-02-17	1.6	Corrected Eventual I/O element description list table (Table 10)
8	2012-02-20	1.7	Added chapters 6.3.1.4.3 I/O properties and 6.3.1.5.1 CAN interface parameters.
9	2012-02-23	1.8	Changes in 6.3.1.6 Configurable parameter values and Global parameter values tables 25 and 26.
10	2012-03-02	1.9	Changed several screenshot pictures; minor description changes.
11	2012-04-03	2.0	Added notice in Electrical characteristics (Chapter 2.4). Expanded CAN (Chapter 13) description.
12	2012-06-05	2.1	Changed some parameter values, updated screenshots, added descriptions of RFID, Garmin, LLS and GPRS commands (Chapters 13, 14, 15, 16), removed out dated information.
13	2012-07-23	2.2	Debug mode added
14	2012-09-28	2.3	Added about internal battery life time
15	2012-11-16	2.4	Added 10.5 COM1 and COM2 working modes, 12.4 AutoCAN description, Table 2 added with sleep average current, changed Tables 9, 10, 12, 24 I/O elements, changed figures with FM Configurators new version screens
16	2012-11-27	2.5	CAN ID correction
17	2012-11-30	2.6	FM5300M support added
18	2013-03-27	2.7	Revised calculations of LLS polynomial
19	2013-05-22	2.9	Added FM5300 Remote log and Data limit functionality descriptions.
20	2013-06-05	3.0	Corrected default values of global parameters, added Garmin multipacket parameter.
21	2013-07-18	3.1	Updated I/O settings
22	2013-08-16	3.2	Fixed CAN configuration output data mask pictures
23	2013-10-01	3.3	Removed unused RILS system description
24	2013-10-02	3.4	Fixed Autogeofencing Activation Timeout max value
25	2013-11-21	3.5	Added new parameters description
26	2013-12-01	3.6	Fixed Garmin connection and pinout scheme
27	2013-12-01	3.7	Ignition source parameters added
28	2013-12-27	3.8	New version functions description added. Green Driving, Ignition Source, Dual LLS mode, Backup Mode. Also new SMS commands added: odinfo, prof2backup, backup2prof, backupinfo.
29	2014-01-15	3.9	Table 25, table 26 parameter values correction
30	2014.01.16	3.10	Minor changes in scheme
31	2014.01.29	3.11	Minor changes on command getweektime description.
32	2014.02.27	3.12	Server Response Timeout SMS configuration ID description added; Minor changes is chapter 4.1
33	2014.03.10	3.13	Protocols information corrected
34	2014.03.21	3.14	LLS polynomial paramters added
35	2014.03.24	3.15	Edited Supported Garmin protocols description
36	2014.04.11	3.16	Added new SMS parameters IDs.
37	2014.04.18	3.17	5.7 Features chapter -> Immobilizer Scenario updated
38	2014.05.20	3.18	Manual CAN configuration minor changes

39	2014.06.03	3.19	Manual CAN 5-9 addition to IO elements list
40	2014.06.17	3.20	Data send parameters ID added
41	2014.06.27	3.21	Replaced temp sensor name to Dallas temp sensor in PERMANENT I/O elements list description.
42	2014.07.25	3.22	Added new section 3.7 Accessories, updated all figure numbers, in text included.
43	2014.08.05	3.23	Updated Autogeofencing information.
44	2014.08.20	3.24	Updated Overspeeding scenario information
45	2014.08.20	3.25	Updated Green driving, Eco driving, Overspeeding ID values.
46	2014.09.01	3.26	Getcontsens, savecontsens parameters added
47	2014.09.02	3.27	Manual CAN configuration minor changes
48	2014.09.24	3.28	Added Mounting recommendations and fixed flash memory.
49	2014.09.30	3.29	Audio port RJ-11 changed to RJ-9, call description changed
50	2014.10.01	3.30	GNSS and GPS antennas connectors changes
51	2014.10.31	3.31	Edited 'banlist' debug SMS answer description
52	2014.11.03	3.32	Added Global parameter ID: Data saving without time synchronization
53	2014.11.10	3.33	Added AutoCAN SMS configuration description Edited SMS commands example answers: getops; readops; getnmeainfo; braninfo Edited min/max parameters values for: ID 302; ID 303; ID 305; ID 013; ID 918; ID 919; ID 920; ID 109
54	2014.12.16	3.34	LLS ID 201 was changed to ID 203. Page 113. This solution is working only on FW version 01.07.16 and higher.
55	2015.01.12	3.33	Deleted acceleration detection sensitivity description. Deleted breaking detection sensitivity description. Deleted cornering detection sensitivity description. Changed acceleration, breaking and cornering active output duration max values from 100 to 10. Added sleep timeout functionality 66p. Changed SET ROAMING gprs command description. Changed SET DATAORDER gprs command description.
56	2015.02.24	3.36	Overvoltage description added
57	2015.03.02	3.37	External battery information added, continuous odometer start value changed
58	2015.03.25	3.38	AutoCAN ID list ID115 and ID116 value range changed
59	2015.04.17	3.39	Table 47 AutoCAN ID list modified; AutoCAN parameters descriptions added.
60	2015.05.05	3.40	Sleep mode description added 67p.
61	2015.06.23	3.41	backupinfo command removed
62	2015.08.27	3.42	Manual CAN configuration minor changes
63	2015.10.07	3.43	Clutch switch description changed
64	2015.10.07	3.44	Break switch description changed
65	2016.01.20	3.45	Deleted acceleration detection sensitivity configurable parameter values Deleted breaking detection sensitivity configurable parameter values Deleted cornering detection sensitivity configurable parameter values

66	2016.04.06	3.46	Updated units in Table 47 AutoCAN ID list
67	2016.05.05	3.47	Added information about internal battery Watt-hour (Wh)
68	2016.05.10	3.48	GPS sleep change: Whole GPS sleep functionality is same except periodic data saving and sending. From ***01.07.45.Rev.00*** version FM always saves and sends periodic records.
69	2016.05.13	3.49	Corrected GPS sleep/deep sleep description.
70	2016.06.07	3.50	Firmware update instruction updated. Idling functionality description added. Figures and figures numbering updated. Other minor changes
71	2016.06.08	3.51	Minor changes Figure 11 corrected
72	2016.06.17	3.52	Added SMS ID's for "Send SMS to number" when Home/Roaming reached max upload.
73	2016.08.22	3.53	Removed CAN sniff and CAN accelerometer functions from COM port 2 configuration description.
74	2016-08-22	3.54	Corrected Virtual COM Port driver download link
75	2016-09-27	3.55	Minor changes
76	2017-02-06	3.56	"Setdigout" command description updated
77	2017-02-22	3.57	Minor changes "Voice Functionality" descriptions.
78	2017-02-27	3.58	Minor changes "Overspeeding Scenario" descriptions and network ping timeout.
79	2017-04-05	3.59	Minor changes