RADIO TEST REPORT

For

CONCEPT AUDIO CORPORATION

Bone Conduction Headphonesw/ Swappable Drivers

Test Model: PB1-COM

Additional Model No.: Please Refer to Page 6

Prepared for	:	CONCEPT AUDIO CORPORATION
Address	:	115-0041.38-23, Iwabuchi-machi, Kita-ku, Tokyo Japan
Prepared by	:	Guangzhou LCS Compliance Testing Laboratory Ltd.
Address	:	No.44-1, Qianfeng North Road, Shiqi, Panyu District, Guangzhou, Guangdong, China
Tel	:	(+86) 020-39166689
Fax	:	(+86) 020-39166619
Web	:	www.LCS-cert.com
Mail	:	webmaster@LCS-cert.com
Date of receipt of test sample	:	February 26, 2026
Number of tested samples	:	2
Sample number	:	A260210005-1, A260210005-2
Serial number	:	Prototype
Date of Test	:	February 26, 2026 ~ March 19, 2026
Date of Report	:	March 19, 2026

RADIO TEST REPORT
MIC Notice No.88 Appendix No. 43
Second-Generation Low-Power Data Communication System/Wireless LAN System

Report Reference No.	:	**LCSC02106005EB**
Date of Issue.....	:	March 19, 2026
Testing Laboratory Name.....	:	**Guangzhou LCS Compliance Testing Laboratory Ltd.**
Address.....	:	No.44-1, Qianfeng North Road, Shiqi, Panyu District, Guangzhou, Guangdong, China
Testing Location/ Procedure....	:	Full application of Harmonised standards ■ Partial application of Harmonised standards □ Other standard testing method □
Applicant's Name.....	:	**CONCEPT AUDIO CORPORATION**
Address.....	:	115-0041.38-23, Iwabuchi-machi, Kita-ku, Tokyo Japan
Test Specification		
Standard.....	:	MIC Notice No.88 Appendix No.43
Test Report Form No.....	:	TRF-4-E-113 A/0
TRF Originator.....	:	Guangzhou LCS Compliance Testing Laboratory Ltd.
Master TRF.....	:	Dated 2011-03

Guangzhou LCS Compliance Testing Laboratory Ltd. All rights reserved.
This publication may be reproduced in whole or in part for non-commercial purposes as long as the Guangzhou LCS Compliance Testing Laboratory Ltd. is acknowledged as copyright owner and source of the material. Guangzhou LCS Compliance Testing Laboratory Ltd. takes no responsibility for and will not assume liability for damages resulting from the reader's interpretation of the reproduced material due to its placement and context.

Test Item Description.....	:	**Bone Conduction Headphonesw/ Swappable Drivers**
Trade Mark.....	:	N/A
Test Model.....	:	PB1-COM
Ratings.....	:	Please Refer to Page 6
Result	:	**PASS**

Compiled by:	**Supervised by:**	**Approved by:**
Lifeng Le/ Administrators	Justin Zhu/ Technique Director	Gavin Liang/ Manager

RADIO -- TEST REPORT

Test Report No. : LCSC02106005EB	March 19, 2026 Date of issue

Test Model.....	: PB1-COM
EUT.....	: Bone Conduction Headphonesw/ Swappable Drivers
Applicant.....	**: CONCEPT AUDIO CORPORATION**
Address.....	: 115-0041.38-23, Iwabuchi-machi, Kita-ku, Tokyo Japan
Telephone.....	: /
Fax.....	: /
Manufacturer.....	**: Zhong shan J seng Technology Co.,Ltd**
Address.....	: No.122-1 South Shenwan MainRoad,ShenWan Town,Zhongshan,Guang Dong China
Telephone.....	: /
Fax.....	: /
Factory.....	**: Zhong shan J seng Technology Co.,Ltd**
Address.....	: No.122-1 South Shenwan MainRoad,ShenWan Town,Zhongshan,Guang Dong China
Telephone.....	: /
Fax.....	: /

Test Result	**PASS**

The test report merely corresponds to the test sample.

It is not permitted to copy extracts of these test result without the written permission of the test laboratory.

Revision History

Report Version	Issue Date	Revision Content	Revised By
000	March 19, 2026	Initial Issue	---

複製禁止

TABLE OF CONTENTS

1. GENERAL INFORMATION 6
1.1. DESCRIPTION OF DEVICE (EUT) 6
1.2. SUPPORT EQUIPMENT LIST 7
1.3. EXTERNAL I/O CABLE 7
1.4. DESCRIPTION OF TEST FACILITY 7
1.5. TEST CONDITIONS 7
1.6. FREQUENCY OF CHANNELS 7
2. TEST METHODOLOGY 8
2.1. EUT EXERCISE 8
2.2. MEASUREMENT UNCERTAINTY 8
2.3. TABLE FOR PARAMETERS OF TEST SOFTWARE SETTING 8
2.4. DESCRIPTION OF TEST MODES 8
2.5. TEST VOLTAGE 9
3. SYSTEM TEST CONFIGURATION 10
3.1. JUSTIFICATION 10
3.2. EUT EXERCISE SOFTWARE 10
3.3. SPECIAL ACCESSORIES 10
3.4. BLOCK DIAGRAM/SCHEMATICS 10
3.5. EQUIPMENT MODIFICATIONS 10
4. SUMMARY OF TEST RESULTS 11
5. TEST RESULT 12
5.1. FREQUENCY TOLERANCE 12
5.2. ANTENNA POWER 13
5.3. OCCUPIED FREQUENCY BANDWIDTH 14
5.4. SPREAD BANDWIDTH 15
5.5. TRANSMITTER SPURIOUS EMISSIONS (CONDUCTED) 16
5.6. CARRIER SENSING FUNCTION 17
5.7. INTERFERENCE PREVENTION FUNCTION 18
5.8. SECONDARY RADIATED EMISSIONS 19
6. PHOTOGRAPHS OF TEST SETUP 20
7. EXTERNAL PHOTOGRAPHS OF THE EUT 20
8. INTERNAL PHOTOGRAPHS OF THE EUT 20
9. LIST OF MEASURING EQUIPMENTS 20

1. GENERAL INFORMATION

1.1. Description of Device (EUT)

EUT	: Bone Conduction Headphonesw/ Swappable Drivers
Test Model	: PB1-COM
Additional Model No.	: K19 PR,K19 PR BP,K19 PRO,K19 PRO BP,K20 PR,K20 PR BP,K20 PRO,K20 PRO BP,K21 PR,K21 PR BP,K21 PRO,K22 PR, K22 PR BP,K22 PRO,K22 PRO BP
Model Declaration	: PCB board, structure and internal of these model(s) are the same, The difference lies in the color of the appearance, the earpiece, and the earphone head. So no additional models were tested
Ratings	: Input: DC 5V, 500mA DC 3.7V by Rechargeable Li-ion Battery, 200mAh
Hardware Version	: K18-K20 MAIN V2
Software Version	: PiBo 1-12-15-1.ufw
Bluetooth	
Frequency Range	: 2402-2480MHz for Bluetooth (79 channels for Bluetooth V5.3(BDR/EDR) Channel Frequency=2402+(K-1), K=1, 2, 3 ……79 40 channels for Bluetooth V5.3(BT LE) Channel Frequency=2402+2(K-1), K=1, 2, 3 ……40
Declared Antenna Power	: Bluetooth V5.3(BDR/EDR): 0.05mW/MHz Bluetooth V5.3(BT LE/ BT 2LE): 1.5mW
Modulation Technology	: Bluetooth V5.3(BDR/EDR): GFSK, π/4-DQPSK Bluetooth V5.3(BT LE/ BT 2LE): GFSK
Data Rate	: Bluetooth V5.3(BDR/EDR): 1/2Mbps Bluetooth V5.3(BT LE/ BT 2LE): 1/2Mbps
Antenna Description	: Ceramic Antenna, 2.84dBi (Max.)

Note: For a more detailed antenna description, please refer to the antenna specifications or the antenna report provided by the customer.

1.2. Support Equipment List

Manufacturer	Description	Model	Serial Number	Certificate
---	---	---	---	---

1.3. External I/O Cable

I/O Port Description	Quantity	Cable
Power Port	1	N/A

1.4. Description of Test Facility

CNAS Registration Number is L11555
A2LA Certificate Number: 5099.01
FCC Designation Number is CN1379
Test Firm Registration Number: 729882

1.5. Test Conditions

Temperature Range	:	21-25℃
Humidity Range	**:**	45-85%
Pressure Range	**:**	86-106kPa

1.6. Frequency of Channels

Bluetooth V5.3 (BT LE/ BT 2LE))

Channel	Frequency(MHz)	Channel	Frequency(MHz)
1	2402	21	2442
2	2404	---	---
3	2406	---	---
---	---	38	2476
---	---	39	2478
19	2438	40	2480
20	2440		

2. TEST METHODOLOGY

2.1. EUT Exercise

The EUT was operated in the engineering mode to fix the TX frequency that was for the purpose of the measurements.

According to its specifications, the EUT must comply with the requirements of MIC Notice No.88 Appendix No. 43.

2.2. Measurement Uncertainty

Test Item		MU	Remark
Bandwidth	:	+/- 0.2 E-6	/
Antenna Power	:	+/-0.33dB	/
Frequency Tolerance	:	+/- 0.3 E-6	/
Conducted spurious emission	:	+/-0.13dB	/
DC Power	:	+/-1%	/

(1). This uncertainty represents an expanded uncertainty expressed at approximately the 95% confidence level using a coverage factor of k=2.

2.3. Table for Parameters of Test Software Setting

During testing, Channel & Power Controlling Software provided by the customer was used to control the operating channel as well as the output power level. The RF output power selection is for the setting of RF output power expected by the customer and is going to be fixed on the firmware of the final end product.

Power Parameters:

Test Software Version	Setup		
Frequency	2402MHz	2440MHz	2480MHz
Bluetooth V5.3(DTS)	Default	Default	Default

2.4. Description of Test Modes

Tested mode, channel, and data rate information				
Mode	Preliminary Test Data Rate (Mbps)	Final Test Data Rate (Mbps) (see Note)	Channel	Frequency (MHz)
Bluetooth V5.3 (BT LE/ BT 2LE)	1/2	1/2	Low :CH1	2402
	1/2	1/2	Middle: CH20	2440
	1/2	1/2	High: CH40	2480
Note: According exploratory test, EUT will have maximum output power in those data rate, so those data rate were used for all test.				

2.5. Test Voltage

POWER SUPPLY VOLTAGE FLUCTUATION TEST

Voltage Fluctuation Test	Normal Voltage	High Voltage +10% of Normal Voltage	Low Voltage -10% of Normal Voltage
Input To EUT	DC 3.7V	DC 4.1V	DC 3.3V
Output To RF Module	DC 3.7V	DC 4.1V	DC 3.3V

Note: During the input supply voltage to the EUT from the external power source is varied by ±10%, the fluctuation of input voltage to the circuit of RF unit of test equipment is exceed ±1%. So, all measurement has been conducted by normal and limit voltage.

複製禁止

3. SYSTEM TEST CONFIGURATION

3.1. Justification

The system was configured for testing in engineering mode.

3.2. EUT Exercise Software

N/A.

3.3. Special Accessories

N/A.

3.4. Block Diagram/Schematics

Please refer to the related document.

3.5. Equipment Modifications

Guangzhou LCS Compliance Testing Laboratory Ltd. has not done any modification on the EUT.

4. SUMMARY OF TEST RESULTS

MIC Notice No.88 Appendix No.43 Article 2 Paragraph 1 Item 19		
Clause	Description of Test (Transmitter Parameters)	Result
3	Frequency Tolerance	PASS
6	Antenna Power	PASS
6	Tolerances for Antenna Power	PASS
4	Transmission Rate	PASS
4	Occupied Frequency Bandwidth	PASS
4	Spread Bandwidth	PASS
13	Dwell Time	N/A
5	Spurious Emissions	PASS
10	Transmission Antenna Gain (EIRP Antenna Power)	PASS
11	Transmission Radiated Angle Width (3dB Beam width)	N/A
12	Interference prevention function	PASS
8	Carrier Sensing function	N/A
Receiver Parameters		
7	Secondary Radiated Emissions	PASS
Note: (1) N/A is an abbreviation for Not Applicable. *(2) N/T means this test item is not tested.*		

5. TEST RESULT

5.1. Frequency Tolerance

5.1.1. Standard Applicable

Tolerance of frequency shall be $\pm 50 \times 10^{-6}$.

5.1.2. Test Procedures

a. Set EUT work in test mode as described in clause 2.4.

b. Connected the EUT's antenna port to the Spectrum Analyzer by suitable attenuator, set the Spectrum Analyzer as below:

Centre Frequency: The centre frequency of the channel under test.

Resolution BW: 10 KHz.

Video BW: 10 KHz.

Span: 1MHz.

Detector: Peak.

Trace Mode: Max Hold.

c. When the trace is complete, find the peak value of the power envelope and record.

5.1.3. Test Setup Layout

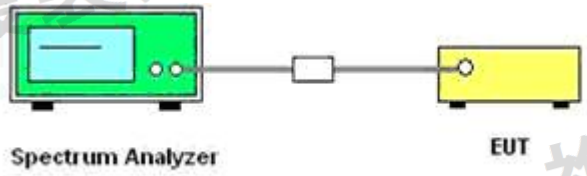

5.1.4. EUT Operation during Test

The EUT was programmed to be in continuously transmitting mode.

5.1.5. Test Result

PASS

Please refer to the Appendix B.1 for BT LE RF Test Data.

5.2. Antenna Power

5.2.1. Standard Applicable

Type	Limit
DTS	10mW
OFDM OBW<26MHz, DS	10mW/MHz
OFDM OBW 26-40MHz	5mW/MHz
Tolerance	+20%

5.2.2. Measuring Instruments

Please refer to section 9 of equipments list in this report.

5.2.2. Test Procedures

a. EUT have transmitted continuous maximum power

b. Antenna Power Error is definition that actual measure antenna power tolerance between +20% power range that base on manufacturer declare the conducted power density.

5.2.3. Test Setup

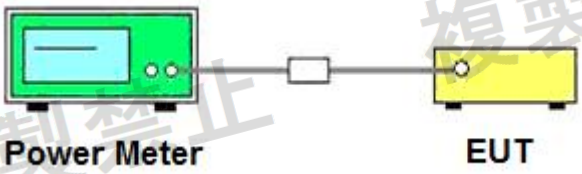

5.2.4. EUT Operation during Test

The EUT was programmed to be in continuously transmitting mode.

5.2.5. Test Result

PASS

Please refer to the Appendix B.2 for BT LE RF Test Data.

5.3. Occupied Frequency Bandwidth

5.3.1. Standard Applicable

Permissible value for occupied bandwidth using the FH system, a hybrid system combining DS and FH systems, or a hybrid system combining FH and OFDM systems shall be 83.5 MHz or less, while necessary bandwidth (minimum occupied bandwidth sufficient to ensure information transmission of required quality at a required transmission rate for the system used under specified conditions for a given emission type) using a system other than any of the above shall be 26 MHz or less.

5.3.2. Test Procedures

a. Set EUT work in test mode as described in clause 2.4.

b. Connected the EUT's antenna port to the Spectrum Analyzer by suitable attenuator, set the Spectrum Analyzer as below:

Centre Frequency: The centre frequency of the channel under test.

RBW/VBW= 30KHz/30KHz

Span: Wide enough to cover the complete power envelope of the signal of the EUT.

Sweep mode: Continuous sweeping.

Detector: Peak.

Trace Mode: Max Hold.

c. When the trace is complete, measure the occupied bandwidth (99% bandwidth) with spectrum analyzer's bandwidth measure function.

5.3.3. Test Setup Layout

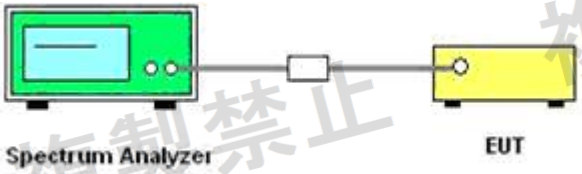

5.3.4. EUT Operation during Test

The EUT was programmed to be in continuously transmitting mode.

5.3.5. Test Result of 99% Spectrum Bandwidth

PASS

Please refer to the Appendix B.3 for BT LE RF Test Data.

5.4. Spread Bandwidth

5.4.1. Standard Applicable

In spread spectrum systems, spread bandwidth (which refers to a frequency bandwidth with an upper limit and lower limit such that each of the mean powers radiated above the upper frequency limit and below the lower frequency limit is equal to 5 % of the total mean power radiated; this also applies hereafter) shall be 500 kHz or more.

5.4.2. Test Procedures

a. Set EUT work in test mode as described in clause 2.4.

b. Connected the EUT's antenna port to the Spectrum Analyzer by suitable attenuator, set the Spectrum Analyzer as below:

Centre Frequency: The centre frequency of the channel under test.

RBW/VBW= 30KHz/30KHz

Span: Wide enough to cover the complete power envelope of the signal of the EUT.

Detector: Peak.

Trace Mode: Max Hold.

c. When the trace is complete, measure the occupied bandwidth (90% bandwidth) with spectrum analyzer's bandwidth measure function.

5.4.3. Test Setup Layout

5.4.4. EUT Operation during Test

The EUT was programmed to be in continuously transmitting mode.

5.4.5. Test Result of 90% Occupied Bandwidth.

PASS

Please refer to the Appendix B.4 for BT LE RF Test Data.

5.5. Transmitter Spurious Emissions (conducted)

5.5.1. Standard Applicable

Permissible mean power of spurious emission of each frequency supplied to a feeder, that is, mean power of spurious emission in the 1 MHz bandwidth at frequency f other than frequency band used shall be as follows:

a. 30MHz - 1,000MHz	2.5 μW or less
b. 1,000MHz - 2,387MHz	2.5 μW or less
c. 2,387MHz - 2,400MHz and 2,483.5MHz - 2,496.5MHz	25 μW or less
d. 2,496.5MHz - 13GHz	2.5 μW or less

5.5.2. Test Procedures

a. Set EUT work in test mode as described in clause 2.4.

b. Connected the EUT's antenna port to the Spectrum Analyzer by suitable attenuator, set the Spectrum Analyzer as below:

Below 1GHz: RBW/VBW= 1MHz / 1MHz

Above 1GHz: RBW/VBW= 1MHz / 1MHz.

Detector: Peak.

Trace Mode: Max Hold.

c. All the emissions from 30MHz to 13GHz were measured and record.

5.5.3. Test Setup Layout

5.5.4. EUT Operation during Test

The EUT was programmed to be in continuously transmitting mode.

5.5.5. Test Results

PASS

Please refer to the Appendix B.5 for BT LE RF Test Data.

. Note:SA set to from 2.4965GHz to 13GHz, plot shows from 2.497GHz to 13GHz as of SA's default format.

5.6. Carrier sensing function

5.6.1. Standard Applicable

Item	Limits
Carrier Sense	Good – EUT stop RF transmission signal after carrier inject to EUT. (On 22.79+Gr-20*log (f)[dBm] (Gr: dBi; f: MHz) or 100mV/m)

5.6.2. Instruments Setting

The following table is the setting of spectrum analyzer and receiver.

Spectrum Parameter	Setting
Attenuation	Auto
RB / VB	1 MHz
Span	0 MHz
Sweep	Continuous
Detector	Peak
Trigger mode	Video

5.6.3. Test Procedures

1. SSG adjusted the frequency as same as the EUT transmitted signal and emitted the absence of modulation from SSG and power level is (On 22.79+Gr-20*log(f)[dBm] (Gr: dBi; f: MHz). Then turn off the RF signal of SSG.
2. EUT have transmitted the maximum modulation signal and fixed channelize.
3. Setting of SA is following as: RB: 1MHz / VB: 1MHz / SPAN: 50MHz / AT: 10dB /Ref: 0dBm / Sweep time: Auto / Sweep Mode: Continuous sweep / Detect mode: Positive peak.
4. SSG RF Signal On.
5. EUT shall be stop the transmitted any signal and SSG RF Signal Off. Then EUT will be continuous transmitted signal.

5.6.4. Test Setup Layout

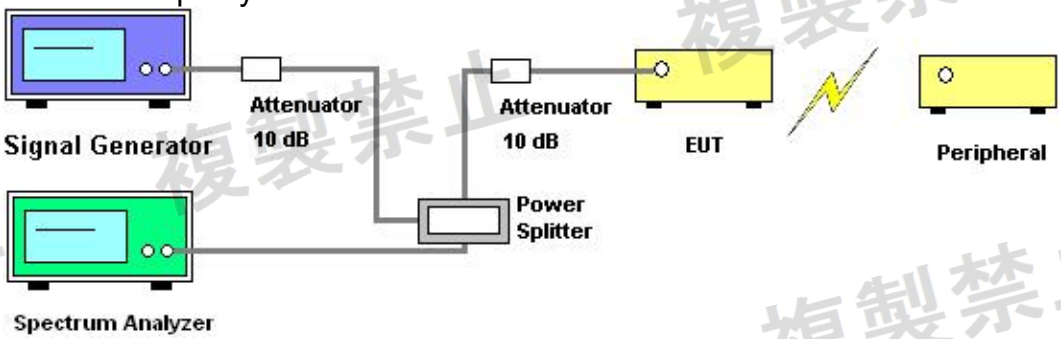

5.6.5. EUT Operation during Test

The EUT was programmed to be in normal transmitting mode.

5.6.6. Test Result

Not Applicable.

5.7. Interference prevention function

5.7.1. Standard Applicable

Item	Limits
Identification code	≧ 48 bits

5.7.2. Measuring ID Code Software

PC with NetTool	Setting
MAC IP List	MAC Scan

5.7.3. Test Procedures

1. In the case that the EUT has the function of automatically transmitting the identification code: a. Transmit the predetermined identification codes from EUT. b. Check the transmitted identification codes with the demodulator.

2. In the case of receiving the identification code: a. Transmit the predetermined identification codes from the counterpart. b . Check if communication is normal. c. Transmit the other signals than predetermined ID codes from the counterpart. d. check if the EUT stops the transmission, or if it displays that identification codes are different from the predetermined ones.

5.7.4. Test Setup Layout

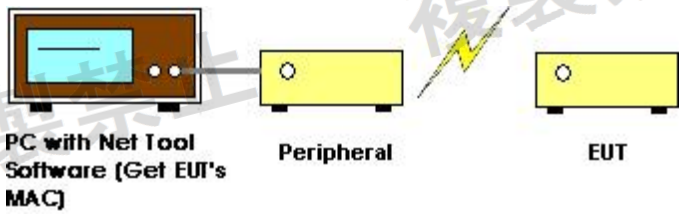

5.7.5. EUT Operation during Test

The EUT was programmed to be in normal transmitting mode.

5.7.6. Test Result

EUT ID	Performance index
36:ad:48:f2:96:fd	Good

5.8. Secondary Radiated Emissions

5.8.1. Standard Applicable

The limit on secondary emissions radiated from the receiving equipment within which the
function of other radio equipment will not be impaired shall be, in terms of the power of a
dummy antenna circuit that has the same electrical constant as the receiving antenna, 4nW or less at a frequency below 1 GHz and 20 nW or less at a frequency of 1 GHz or higher as measured using the circuit

5.8.2. Test Procedures

a. Set EUT work in test mode as described in clause 2.4.

b. Connected the EUT's antenna port to the Spectrum Analyzer by suitable attenuator, set the Spectrum Analyzer as below:

Resolution BW: 100 KHz for frequency below 1GHz and
1MHz for frequency above 1GHz

Video BW: 100 KHz for frequency below 1GHz and
1MHz for frequency above 1GHz

Detector: Peak.

Trace Mode: Max Hold.

c. All the emissions from 30MHz to 12.5GHz were measured and record.

5.8.3. Test Setup

5.8.4. EUT Operation during Test

The EUT was programmed to be in continuously transmitting mode.

5.8.5. Test Results

PASS

Please refer to the Appendix B.6 for BT LE RF Test Data.

6. PHOTOGRAPHS OF TEST SETUP

Please refer to separated files Appendix C for Test Setup Photographs

7. EXTERNAL PHOTOGRAPHS OF THE EUT

Please refer to separated files Appendix D for External Photos of EUT

8. INTERNAL PHOTOGRAPHS OF THE EUT

Please refer to separated files Appendix E for Internal Photos of EUT

9. LIST OF MEASURING EQUIPMENTS

Item	Equipment	Manufacturer	Model No.	Equipment No.	Cal Date	Due Date
1	Power Meter	Keysight	E4417A	GLCS-E-279	2025-04-10	2026-04-09
2	Power Sensor	Keysight	E9304A	GLCS-E-280	2025-04-10	2026-04-09
3	Power Sensor	Keysight	E9304A	GLCS-E-281	2025-04-10	2026-04-09
4	Spread Ppectrum Unit	Tonscend	TS-WF7U2	GLCS-E-364	N/A	N/A
5	Test Software	Tonscend	JS1120-3	GLCS-E-366	N/A	N/A
6	RF Control Unit	Tonscend	JS0806-2	GLCS-E-365	2025-09-01	2026-08-31
7	MXA Signal Analyzer	Keysight	N9020A	GLCS-E-356	2025-08-18	2026-08-17
8	DC Power Supply	Keysight	E3642A	GLCS-E-357	2025-08-18	2026-08-17
9	Signal Analyzer	Keysight	N5172B	GLCS-E-353	2025-08-18	2026-08-17
10	Signal Analyzer	Keysight	N5181A	GLCS-E-354	2025-08-18	2026-08-17
11	WIDEBAND RADIO COMMUNICATION TESTER	Rohde & Schwarz	CMW500	GLCS-E-355	2025-08-18	2026-08-17
12	Oscilloscope	Tektronix	46084A/4609A	GLCS-E-113	2025-05-22	2026-05-21

Note: Calibration by the calibration agencies listed in the table corres pond to paragraph 4 (ii) (c) of Article 24-2 in the Radio Law.
Calibration Agencies: Guangzhou LiSai Metrology & Test Co., Ltd.

☐ (a) Calibration conducted by the National Institute of Information and Communications Technology (NICT) or a designated calibration agency under Article 102-18-1 of the Radio Act.

☐ (b) Calibration conducted based on the regulations of Article 135 or 144 of the Measurement Act.

☒ (c) Calibration conducted in foreign countries, which is equivalent to calibration conducted by the NICT or a designated calibration agency under Article 102-18-1 of the Radio Act.

☐ (d) Calibration, etc. conducted by using measuring instruments and other facilities listed at the bottom of appended table 3 of the Radio Act, which is to have been calibrated as described in (a) through (c) above.

----------THE END OF REPORT----------