FM3612 User Manual
V0.3

Table of contents

1 INTRODUCTION 6

1.1 ATTENTION 6
1.2 INSTRUCTIONS OF SAFETY 6
1.3 LEGAL NOTICE 7
1.4 ABOUT DOCUMENT 7

2 BASIC DESCRIPTION 8

2.1 PACKAGE CONTENTS 8
2.2 BASIC CHARACTERISTICS 8
2.3 TECHNICAL FEATURES 10
ELECTRICAL CHARACTERISTICS 11
2.4 ABSOLUTE MAXIMUM RATINGS 12
2.5 TECHNICAL INFORMATION ABOUT INTERNAL BATTERY 12

3 CONNECTION, PINOUT, ACCESSORIES 13

3.1 HOW TO INSERT SIM CARD AND ATTACH BATTERY INTO FM3612 DEVICE: 13
3.2 INSTALLING FM3612 DRIVERS 15
3.3 NAVIGATE LED 16
3.4 MODEM LED 17
3.5 STATUS LED 17
3.6 FM3612 SOCKET 2×6* 17
3.7 USB 18
3.8 ACCESSORIES 19

4 FIRMWARE 23

5 OPERATIONAL BASICS 24

5.1 OPERATIONAL PRINCIPALS 24
5.2 SLEEP MODES 25
5.2.1 Sleep mode 25
5.2.2 Deep Sleep mode 25
5.3 VIRTUAL ODOMETER 26
5.4 FEATURES 26
5.4.1 Scenarios 26
5.4.2 Trip 27
5.4.3 Geofencing 27
5.4.4 iButton list 28
5.5 CONFIGURATION 28
5.6 CONFIGURATOR 28
5.7 READ RECORDS 30
5.8 SYSTEM SETTINGS 31
5.9 RECORDS SETTINGS 33
5.10 GSM SETTINGS, GPRS PART 33
5.11 GSM SETTINGS, SMS PART 34
5.12 GSM SETTINGS, OPERATOR LIST 35
5.13 DATA ACQUISITION MODE SETTINGS 35
5.14 FEATURES SETTINGS 40
5.14.1 Scenarios settings 40
5.14.2 Trip settings 41
5.14.3 Geofencing settings 42
5.14.4 SMS events 45
5.15 I/O SETTINGS 50
5.15.1 Monitoring 55
5.15.2 Event Generating 55
5.15.3 Hysteresis 56

6 SMS COMMAND LIST 56

6.1 SMS COMMAND LIST 56

6.1.1 getstatus 58
6.1.2 getweektime 58
6.1.3 getops 58
6.1.4 getcfgtime 58
6.1.5 getgps 59
6.1.6 ggps 59
6.1.7 getver 59
6.1.8 getinfo 60
6.1.9 getio 60
6.1.10 readio # 60
6.1.11 setdigout ## Y1 Y2 61
6.1.12 getparam #### 61
6.1.13 setparam #### 61
6.1.13. getparam 1271 X/212 X 61
6.1.14. setparam 1271 X/212 X 61
6.1.15 readops # 61
6.1.16 flush #,#,#,#,#,#,# 61
6.1.17 sn # 62
6.1.18 banlist 62
6.1.19 crashlog 62
6.1.20 lvcangetprog 62
6.1.21 lvcansetprog # 62
6.1.22 lvcangetinfo 62

7 DEBUG MODE 63

8 PARAMETER LIST 63

8.1 PARAMETERS VALUE TYPES 63
8.2 SYSTEM PARAMETERS 64

8.2.1 Sleep Mode (ID=1000) 64
8.2.2 Sleep timeout (ID=200) 64
8.2.3 Analog Input value range (ID=1001) 64
8.2.4 Stop Detection Source (ID=1002) 64
8.2.5 Static Navigation (ID=1003) 64
8.2.6 Ignition Source (ID=1004) 65
8.2.7 Ignition Detection(ID=1008) 65
8.2.8 Ignition Detection Timeout(ID=1009) 65
8.2.9 GNSS FIX Timeout for Time Synchronization via NTP (ID=1007) 65
8.2.10 Saving/Sending without time synchronization (ID=201) 66
8.2.11 GNSS System (ID=202) 66

8.3 RECORDS PARAMETERS 66

8.3.1 Sorting (ID=1010) 66
8.3.2 Active Data Link Timeout (ID=1011) 66
8.3.3 Server Response Timeout (ID=1012) 66

8.4 GSM PARAMETERS 67

8.4.1 GPRS content activation (ID=1240) 67
8.4.2 APN Name (ID=1242) 67
8.4.3 APN username (ID=1243) 67
8.4.4 APN Password (ID=1244) 67
8.4.5 Domain (ID=1245) 67
8.4.6 Target Server Port (ID=1246) 68
8.4.7 Protocol (ID=1247) 68
8.4.8 Use 2G only (ID=1248) 68
8.4.9 SMS Login (ID=1252) 68
8.4.10 SMS Password (ID=1253) 68
8.4.11 SMS Time Zone (ID=1254) 68

8.4.12 SMS data sending settings (ID=1250) ... 69
8.4.13 SMS Data send week time schedule (ID=1273) ... 69
8.4.14 Authorized phone numbers (ID=1260-1269) ... 69
8.4.15 SMS Event PreDefined Numbers (ID=5000-5009) ... 69
8.4.16 Operator List (ID=1271 X) ... 69
8.5 DATA ACQUISITION MODES PARAMETERS ... 70
8.5.1 Home Network GSM operator code "Vehicle on STOP" parameters ... 70
8.5.2 Home Network GSM operator code "Vehicle MOVING" parameters ... 71
8.5.3 Roaming Network GSM operator code "Vehicle on STOP" parameters ... 72
8.5.4 Roaming Network GSM operator code "Vehicle MOVING" parameters ... 73
READ CHAPTER 8.5.1.4. ... 75
8.5.5 Unknown Network GSM operator code "Vehicle on STOP" parameters ... 75
8.5.6 Unknown Network GSM operator code "Vehicle MOVING" parameters ... 75
8.6 FEATURES PARAMETERS ... 77
8.6.1 Green Driving scenario (ID=1600) ... 77
8.6.2 Max Acceleration Force (ID=1602) ... 77
8.6.3 Max Braking Force (ID=1603) ... 77
8.6.4 Max Cornering Force (ID=1604) ... 77
8.6.5 Max allowed Speed (ID=1605) ... 78
8.6.6 OverSpeeding scenario (ID=1601) ... 78
8.6.7 Jamming detection scenario (ID=1606) ... 78
8.6.8 Immobilizer scenario (ID=1607) ... 78
8.6.9 Immobilizer ignition timeout(ID=1609) ... 78
8.6.10 iButton list checking scenario (ID=1608) ... 78
8.6.11 Excessive Idling detection (ID=1610) ... 79
8.6.12 Time to stationary (ID=1611) ... 79
8.6.13 Time to movement (ID=1612) ... 79
8.6.14 Trip (ID=1280) ... 79
8.6.15 Start Speed (ID=1281) ... 79
8.6.16 Ignition Off Timeout (ID=1282) ... 79
8.6.17 Trip distance mode (ID=1283) ... 80
8.6.18 Enable odometer value setting (ID=1284) ... 80
8.6.19 Continuous odometer value (ID=1285) ... 80
8.6.20 Remember iButton ID, while trip is detected(ID=1286) ... 80
8.6.21 Geofencing ... 80
8.6.22 AutoGeofencing ... 82
8.6.23 iButton List (ID=7000-7499) ... 83
8.7 I/O PARAMETERS ... 83
8.7.1 I/O#1 Priority (ID=2000) ... 83
8.7.2 I/O#1 High level (ID=2001) ... 83
8.7.3 I/O#1 Low level (ID=2002) ... 84
8.7.4 I/O#1 event generation type (ID=2003) ... 84
8.7.5 I/O#1 averaging length (ID=2004) ... 84
8.8 LV-CAN FEATURES ... 85
8.8.1 CAN Mode ... 85
8.8.2 I\O Send as 0 when ignition is off ... 86
8.9 SMS EVENT CONFIGURATION ... 86
8.9.1 I/O#1 element SMS event configuration (ID=5100) ... 86

9 FM3612 WITH LIGHT VEHICLES CAN ADAPTER LV-CAN200/ALL-CAN300 ... 88

9.1 PURPOSE OF LIGHT VEHICLES CAN ADAPTER LV-CAN200/ALL-CAN300 ... 88
9.2 LV-CAN200/ALL-CAN300 PROGRAM NUMBER SELECTION ... 89
9.2.1 LV-CAN200/ALL-CAN300 program number configuration via SMS command ... 89
9.2.2 Selecting LV-CAN200/ALL-CAN300 program number manually ... 89
9.2.3 Program number logic change ... 90
9.3 CONNECTING FM3612 WITH LIGHT VEHICLES CAN ADAPTER ... 91
9.4 CONNECTING LIGHT VEHICLES CAN ADAPTER ... 91
9.5 FM3612 CONFIGURATION ... 92

9.5.1 SCAN function ... 92
9.5.2 Offline configuration ... 92
9.6 PARAMETERS ID ... 94
9.7 SMS CONFIGURATION ... 99
9.8 CAN PROGRAM NUMBER REQUEST BY SMS ... 102
9.9 GET LV-CAN INFO BY SMS ... 102
9.10 REFERENCES ... 102

10 MOUNTING RECOMMENDATIONS ... 103

10.1 CONNECTING WIRES ... 103
10.2 CONNECTING POWER SOURCE ... 103
10.3 CONNECTING IGNITION WIRE ... 103
10.4 CONNECTING GROUND WIRE ... 103
10.5 MODULE INSTALLATION ... 104

CHANGE LOG ... 105

1 INTRODUCTION

1.1 Attention

Do not disassemble the device. If the device is damaged, the power supply cables are not isolated or the isolation is damaged, before unplugging the power supply, do not touch the device.

All wireless data transferring devices produce interference that may affect other devices which are placed nearby.

The device must be connected only by qualified personnel.

The device must be firmly fastened in the predefined location.

The programming must be performed using a second class PC (with autonomic power supply).

The device is susceptible to water and humidity.

Any installation and/or handling during a lightning storm are prohibited.

FM3612 has USB interface;
Please use cables provided with FM3612 device.
Teltonika is not responsible for any harm caused by using wrong cables for PC <-> FM3612 connection.

1.2 Instructions of safety

This chapter contains information on how to operate FM3612 safely. By following these requirements and recommendations, you will avoid dangerous situations. You must read these instructions carefully and follow them strictly before operating the device!

The device could be supplied with 10 V...30 V DC power supply. The nominal voltage is 12 V DC. The allowed range of voltage is 10 V...30 V DC.

To avoid mechanical damage, it is advised to transport the FM3612 device in an impact-proof package. Before usage, the device should be placed so that its LED indicators are visible, which show the status of operation the device is in.

When connecting the connection (2x6) cables to the vehicle, the appropriate jumpers of the power supply of the vehicle should be disconnected.

Before dismounting the device from the vehicle, the 2x6 connection must be disconnected.

The device is designed to be mounted in a zone of limited access, which is inaccessible for the operator. All related devices must meet the requirements of standard EN 60950-1.

The device FM3612 is not designed as a navigational device for boats.

1.3 Legal Notice

Copyright © 2016 Teltonika. All rights reserved. Reproduction, transfer, distribution or storage of part or all of the contents in this document in any form without the prior written permission of Teltonika is prohibited.

Other products and company names mentioned here may be trademarks or trade names of their respective owners.

The manufacturer reserves the right to make changes and/or improvements at any time in design, functionality, parameters and electrical characteristics without any prior notice and without incurring obligations.

1.4 About document

This document contains information about the architecture, possibilities, mechanical characteristics, and configuration of the FM3612 device.

Acronyms and terms used in document

PC – Personal Computer.

GPRS – General Packet Radio Service

GNSS – Global Positioning System

GSM – Global System for Mobile Communications

SMS – Short Message Service

AC/DC – Alternating Current/Direct Current

I/O – Input/Output

Record – AVL data stored in FM3612 memory. AVL data contains GNSS and I/O information

AVL packet – data packet that has been sent to server during data transmission. AVL packet contains from 1 to 50 records.

2 BASIC DESCRIPTION

FM3612 is a terminal with GPS/GLONASS and GSM/3G connectivity with backup battery, which is able to collect device coordinates and other useful data and transfer them via the GSM/3G network. This device is perfectly suitable for applications where location acquirement of remote objects is needed. It is important to mention that FM3612 has additional inputs and outputs, which let you control and monitor other devices on remote objects. FM3612 also has a USB port for device status log output and configuration.

2.1 Package contents[1]

The FM3612 device is supplied to the customer in a cardboard box containing all the equipment that is necessary for operation. The package contains:

FM3612 device;
Input and output power supply cable with a 2x6 connection pins;
USB cable;
Li-Po battery 3.7, 170mAh

2.2 Basic characteristics

GSM / GPRS / 3G features:

- UMTS/HSPA+, GSM/GPRS/EDGE module
- UMTS/HSPA+ bands depending on module:
  - UC20-G 850/900/1700/1900/2100 MHz
- HSUPA rate up to 5.76 Mbps, HSDPA rates up to 14,4 Mbps
- UMTS Uplink/Downlink up to 384 kbps
- EDGE Uplink/Downlink up to 236.8 kbps
- GPRS and EDGE class 12;
- SMS (text, data).

FM3612 Interface features:

- Power supply: 10 ÷ 30V;
- 2 digital inputs;
- 2 analog/digital input;
- 2 open collector Digital output;
- 1 Wire interface:
  - Temperature sensor
  - iButton
- Internal backup battery;
- 2 Status LEDs:
  - Navigate
  - Status
- Internal USB port;
- Internal GSM/GPRS/3G antenna;
- Internal GNSS antenna;

[1] Package content depends on Order Code, and can be customized by customer needs.

- Interface for LVCAN;

Hardware features:

- Cortex®-M3 processor;
- 8 Mbit internal Flash memory;
- Built-in accelerometer sensor.

GNSS features:

- TG1000 engine for GNSS, GLONASS, Galileo and QZSS;
- 33channel GPS/GLONASS receiver;
- Protocol NMEA-0183: GGA, GGL, GSA, GSV, RMC, VTG;
- -165 dBm Tracking Sensitivity

Special features:

- Any element event triggers (external sensor, input, speed, temperature, etc.);
- Highly configurable data acquisition and sending;
- Multiple Geo-fence areas;
- Sleep mode;
- Deep sleep mode;
- Configurable scenarios available;
- Real-time process monitoring;
- Authorized number list for remote access;
- Firmware update over GPRS or USB port;
- Configuration update over GPRS, SMS or USB port;
- TCP/IP or UDP/IP protocol support;
- Up to 3854 records storing;
- Radio frequency jamming detection.
- Records exporting using USB;
- Offline working mode;

Overvoltage protection

Description	Voltage	Duration
Normal operation	10-30V	Unlimited
Protection turns on, device turns off.	34V	Unlimited
Maximum voltage	<70V	Unlimited
Maximum voltage impulse	90V	5 milliseconds

2.3 Technical features

Part name	Physical specification
System LED	LED
Navigation LED	LED
Socket 2x6	Tyco Micro MATE-N-LOK™ 4-794628-0 or similar
USB	Micro USB socket

Technical details
Power supply 10...30 V DC 2W Max Energy consumption: GPRS: ⎓ 150 mA r.m.s Max., Nominal: ⎓ average 50 mA r.m.s, GNSS Sleep[2]: ⎓ average 18 mA Deep Sleep: ⎓ average less than 5 mA[3] Battery charge current: ⎓ 100 mA Rated input current: ⎓ 250 mA Max. Operation temperature: -25°C ... +55°C Storage temperature: -40°C ... +70°C Storage relative humidity 5 ... 95 % (no condensation) Internal fuse: 3A, 125V

Table 1. FM3612 specifications

[2] When in Sleep mode, FM unit turns OFF GNSS module.
[3] When in Deep Sleep mode no data storing and sending is activated.

Electrical characteristics

CHARACTERISTIC DESCRIPTION \ VALUE	Min.	Typ.	Max.	Unit
Supply Voltage:				
Supply Voltage (Recommended Operating Conditions)	10		30	V
Digital Output (Open Drain grade):				
Drain current (Digital Output OFF)			120	µA
Drain current (Digital Output ON, Recommended Operating Conditions)			1.0	A
Static Drain-Source resistance (Digital Output ON)			300	mΩ
Digital Input:				
Input resistance (DIN1,)	15			kΩ
Input resistance (DIN2, DIN3)	20			kΩ
Input resistance (DIN4)	120			kΩ
Input Voltage (Recommended Operating Conditions)	0		Supply voltage	V
Input Voltage threshold (DIN1)		7.5		V
Input Voltage threshold (DIN2)		2.5		V
Input Voltage threshold (DIN3)		2.5		V
Input Voltage threshold (DIN4)		2.5		V
Analog Input:				
Input Voltage (Recommended Operating Conditions), Range1	0		10	V
Input resistance, Range1		120		kΩ
Measurement error		0.47		%
Additional error		±17.3		mV
Input Voltage (Recommended Operating Conditions) Range2	0		30	V
Input resistance, Range2		150		kΩ
Measurement error		1.01		%
Additional error		±139	0	mV

Output Supply Voltage 1-Wire:				
Supply Voltage	3.3		3.6	V
Output inner resistance		7		Ω
Output current (U_{out} > 3.0V)		30		mA
Short circuit current (U_{out} = 0)		130		mA

2.4 Absolute Maximum Ratings

VALUE / CHARACTERISTIC DESCRIPTION	Min.	Typ.	Max.	Unit
Supply Voltage (Absolute Maximum Ratings)	-32		32	V
Drain-Source clamp threshold voltage (Absolute Maximum Ratings), (I_{drain} = 2mA)			36	V
Digital Input Voltage (Absolute Maximum Ratings)	-32		32	V
Analog Input Voltage (Absolute Maximum Ratings)	-32		32	V

2.5 Technical Information about internal battery

FM3612 internal battery is used for detecting external voltage disconnection.

CAUTION: RISK OF EXPLOSION IF BATTERY IS REPLACED BY AN INCORRECT TYPE. DISPOSE OF USED BATTERIES ACCORDING TO THE INSTRUCTIONS.

Battery Disposal instructions:

Battery should not be disposed of with general household waste.
Bring damaged or worn-out batteries to your local recycling center or dispose them to battery recycle bin found in stores.

Internal back-up battery	Battery voltage V	Nominal capacity (mAh)	Power(Wh)	Charging temperature range (◦C)
Li-Polymer rechargeable battery	3,7	170	0.64 - 0.66	0 – 45

3 CONNECTION, PINOUT, ACCESSORIES

3.1 How to insert SIM card and attach battery into FM3612 device:

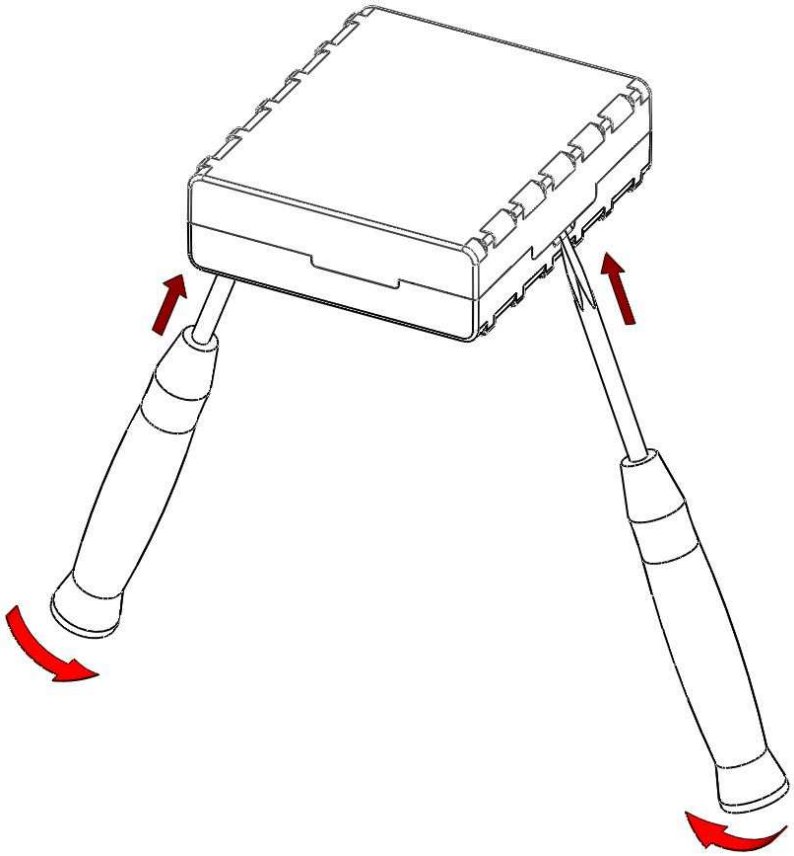

①

Gently open FM3612 case using screwdrivers

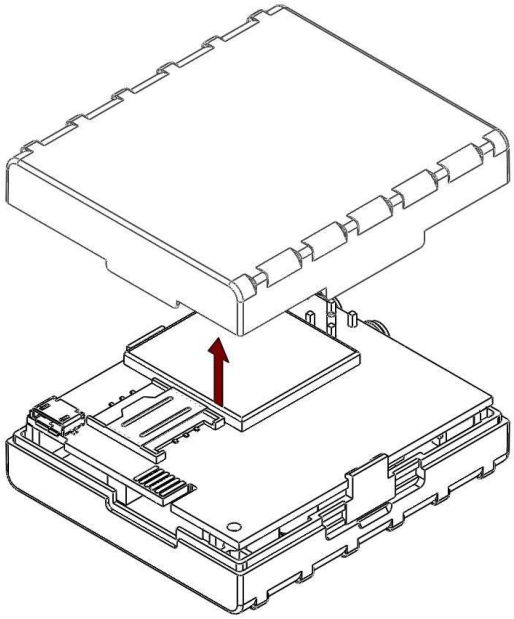

②

Remove FM3612 case

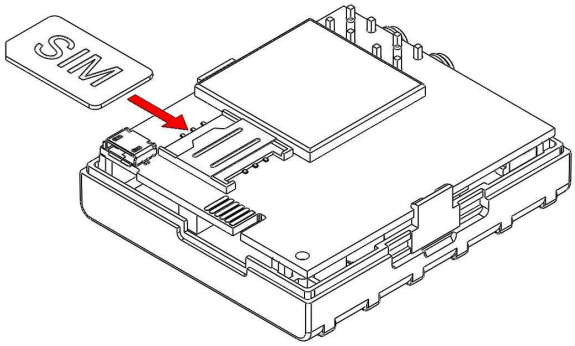

③

Insert SIM card as shown

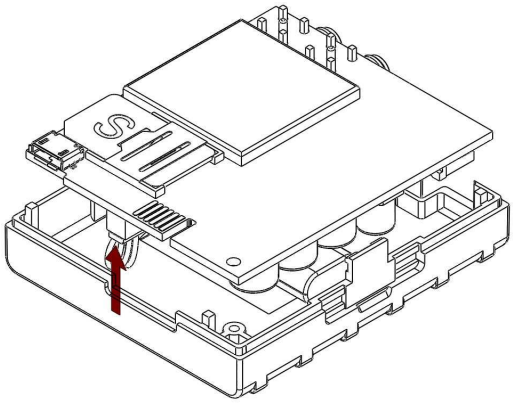

④

Attach battery

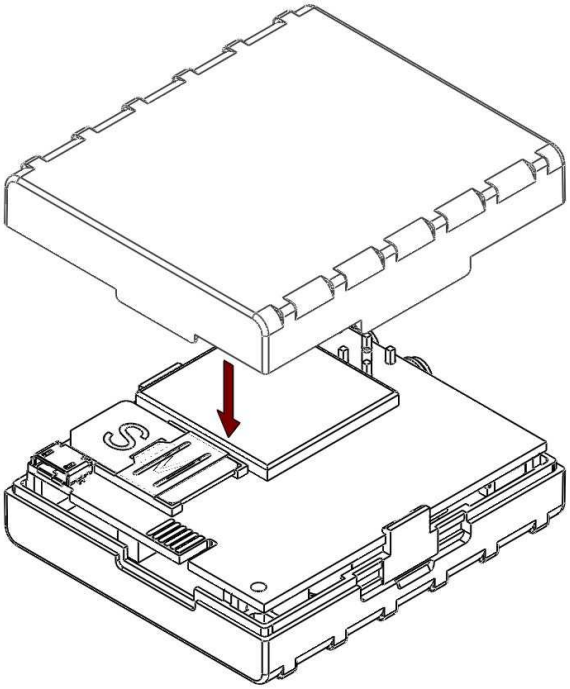

⑤

Attach top housing cover

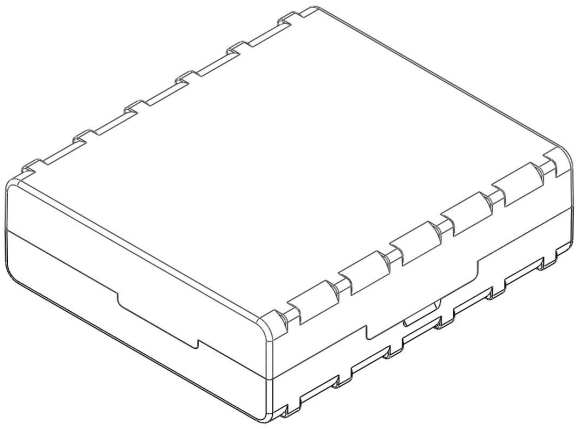

⑥

Device is ready

3.2 Installing FM3612 drivers

Software requirements:

- Operating system 32-bit and 64-bit: Windows XP with SP3 or later, Windows Vista, Windows 7.
- MS .NET Framework V3.5 or later (http://www.microsoft.com or http://avl1.teltonika.lt/downloads/tavl/Framework/dotnetfx35setupSP1.zip).

Drivers:

Please download Virtual COM Port drivers from Teltonika website:
http://avl1.teltonika.lt/downloads/FM36/vcpdriver_v1.3.1_setup.zip

Installing drivers:

Extract and run VCPDriver_V1.3.1_Setup.exe. This driver is used to detect FM3612 device connected to the computer. Click 'Next' in driver installation window (figures below):

Figure 2. Driver installation window

This will launch device driver installation wizard. In the following window click 'Next' button again:

Figure 3. Driver installation window

Setup will continue installing drivers and will display a window about successful process at the end. Click 'Finish' to complete setup:

Figure 4. Driver installation window

You have now installed drivers for FM3612 device successfully.

3.3 Navigate LED

Behavior	Meaning
Permanently switched on	GNSS signal is not received
Blinking every second	Normal mode, GNSS is working
Off	GNSS is turned off because: • Sleep mode • Deep sleep mode Or • GNSS antenna short circuited

3.4 Modem LED

Behavior	Meaning
Blinking every second	Normal mode
Blinking every 2 seconds	Deep sleep mode
Blinking fast for a short time	Modem activity
Blinking fast constantly	Boot mode
Off	• Device is not working Or • Device firmware being flashed

3.5 Status LED

Behavior	Meaning
Permanently off	Device off
Blinking every 1 second	Net search / Not registered/ turning off
Slow blinking every 3 seconds	Registered: full service
Permanently on	A call is active

3.6 FM3612 Socket 2×6*

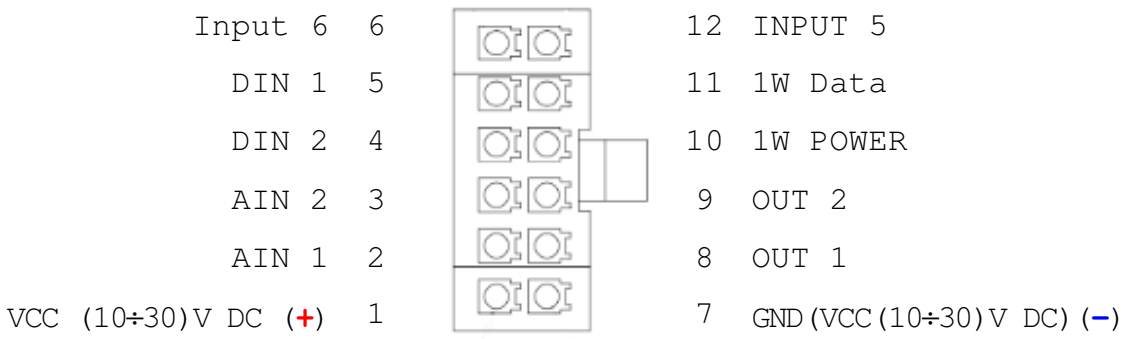

Figure 5. 2×6 socket pinout

Figure 6. FM3612 sticker

Pin Nr.	Pin Name	Description
1	VCC (10÷30) V DC (+)	Power supply for module. Power supply range (10÷30)V DC Energy consumption: GPRS: ⎓ 150 mA r.m.s Max.
2	DIN 4 / AIN 1	Digital input, channel / Analog input 0-30 V range
3	DIN 3 / AIN 2	Digital input, channel / Analog input 0-30 V range
4	DIN 2	Digital input, channel 2
5	DIN 1	Digital input, channel 1
6	INPUT 6	LV-CAN/ALL-CAN interface input 6 line
7	GND (-)	Ground pin.
8	OUT 1	Digital output. Channel 1. Open collector output. Max. ⎓ 150mA.
9	OUT 2	Digital output. Channel 1. Open collector output. Max. ⎓ 150mA.
10	1WIRE POWER	Power supply pin for Dallas 1-Wire® devices
11	1WIRE DATA	Data channel for Dallas 1-Wire® devices
12	INPUT 5	LV-CAN/ALL-CAN interface input 5 line

Table 2. Socket 2x6 pinout description.

3.7 USB

Micro USB connector
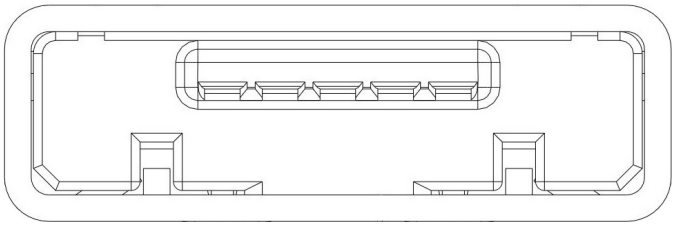

Figure 7. Micro USB type B connector

FM3612 connected to PC creates an STM Virtual COM Port, which can be used as a system port (to flash firmware and configure the device):

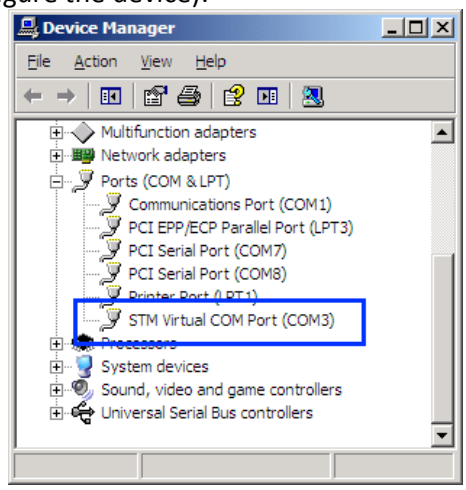

Figure 8. COM-Ports

3.8 Accessories

1 – Wire devices for FM3612

One of the realized features is 1-Wire® data protocol, which enables connection of thermometer (DS1820, DS18S20 and DS18B20) and I-Button type: DS1990A (Figures 9 and 10 show FM3612 and 1-wire® device connection schemes).

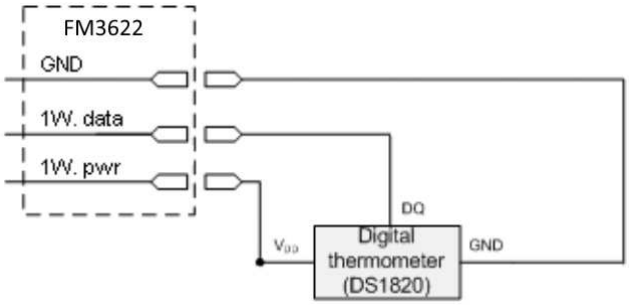

Left row of pins

1W.PWR (FM3612 – pin5)	1
1W. Data (FM3612 – pin4)	2
GND (FM3612 – pin7)	3
Digital Input	4

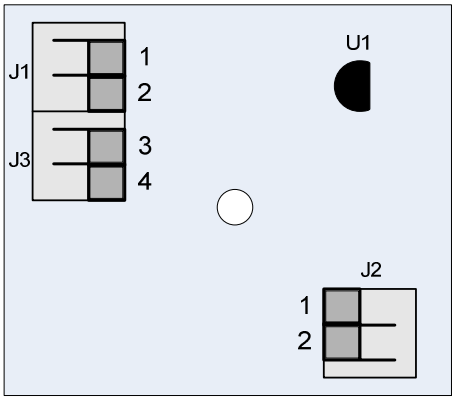

Right row of pins

1	Vpp (+5 Volts DC) – power source for external digital sensor
2	Output from external digital sensor

Figure 9. Digital thermometer DS1820 and TTJ100 connection scheme

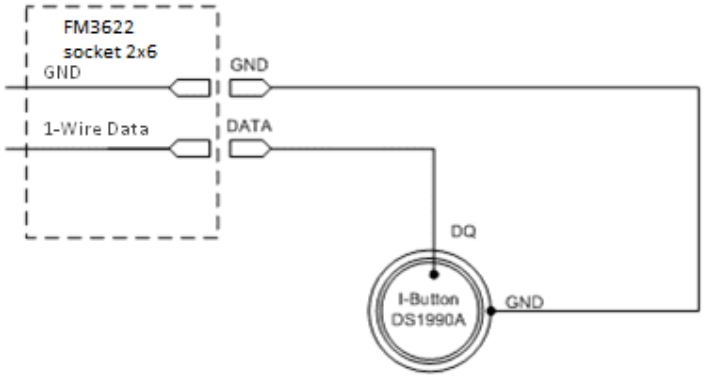

Figure 10. I-Button DS1990A connection scheme

Note: Teltonika does not provide any additional equipment like panic buttons, door sensors or others.

Fuel Tank sensors for FM3612

A fuel tank level sensor exists in most cars, which shows the approximate fuel level in the driver's indicator panel. It is possible to connect Analog input to FM3612 (if sensor returns analogue signal proportional to fuel level). Figure 10 shows the connection scheme to the FM3612 and fuel tank sensor through Analog input 1. After the connection to the tank fuel level sensor, calibration is needed. Calibration is needed because most fuel tank sensors are not linear. Calibration is performed by measuring voltage dependence on volume of fuel in tank.

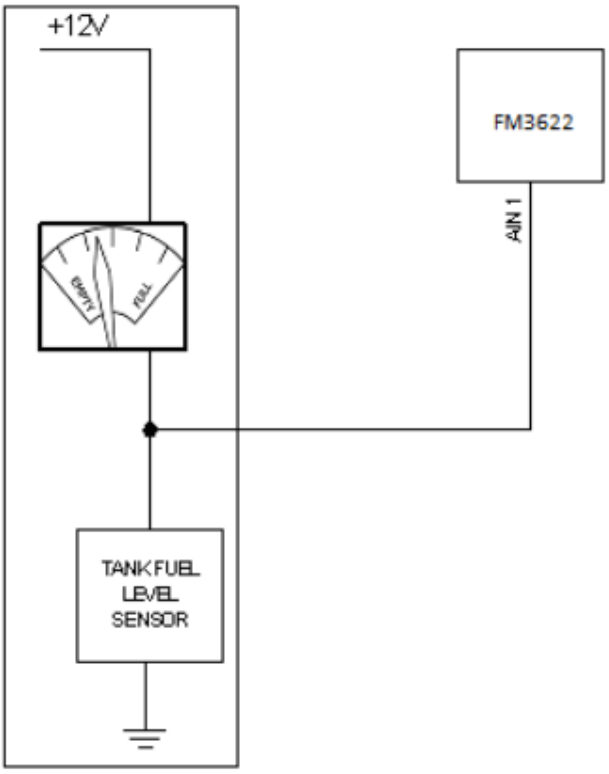

Figure 11. Fuel Tank sensor connection

Alarm buttons, door sensors, etc.

Alarm buttons, door sensors, ignition, etc. return two states: high or low voltage. Digital inputs are used to read this information. Figure below shows how to connect alarm button, door sensor, etc.

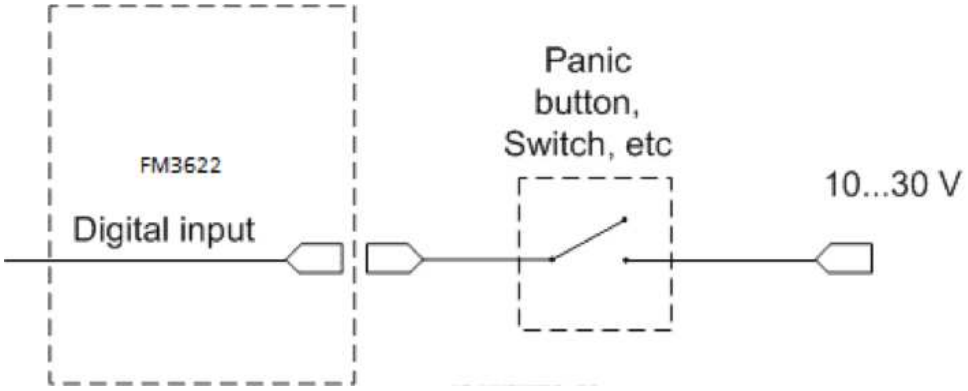

Figure 12. Panic button connection

In cases when sensor output signal is negative, an additional relay has to be installed to convert negative signal to positive.

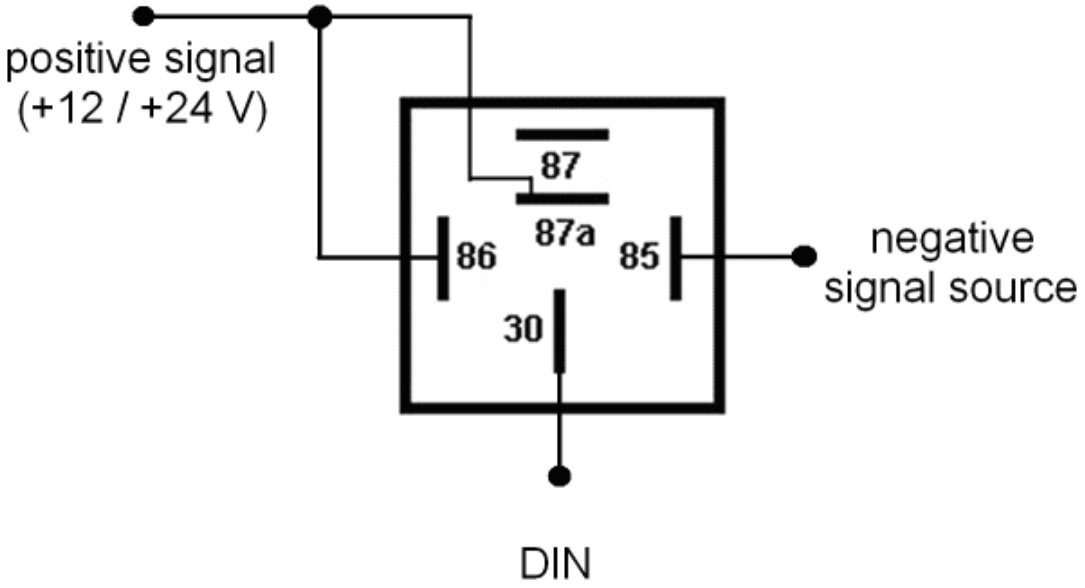

Figure 13. Inverting relay connection

Immobilizer relay

When connected as shown below, FM3612 disables engine starter when output is OFF. More details about relays can be found below.

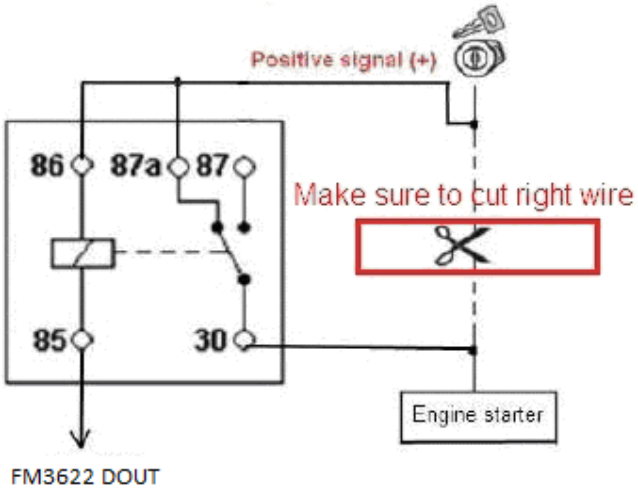

Figure 14. Immobilizer relay connection

Relays

An ordinary automotive relay is used to invert input signal or to immobilize engine starter. Note, that they are available as 12 V or 24 V.

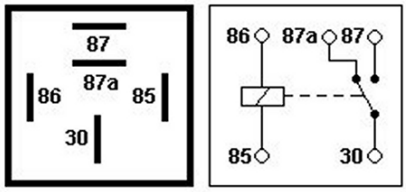

Figure 15. Automotive relay pinout

4 FIRMWARE

FM3612 functionality is always improving, new firmware versions are developed. Current module firmware version can be retrieved from Configurator.

Connect FM3612 to PC with the USB cable. Launch “Firmware Updater”, select COM port to which device is connected, click connect, and when IMEI and Firmware version fields are filled, start the update. Device needs some time to send IMEI and Firmware version, so do not be afraid if IMEI will not show up immediately, disconnect and after 1-2 minutes try to connect again. When starting update device will open link with updater. With link open device downloads firmware and starts installing. Wait thru all these screens as in **Figure 17** for firmware to update. Update process may take up to several minutes.

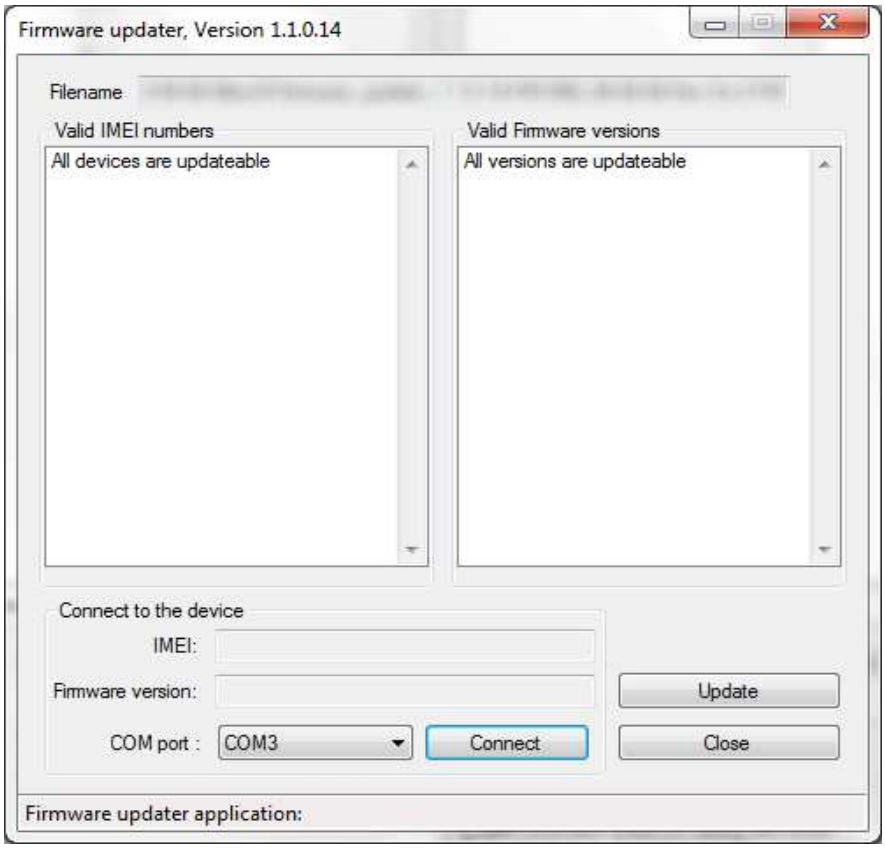

Figure 16. FM3612 firmware updater screen

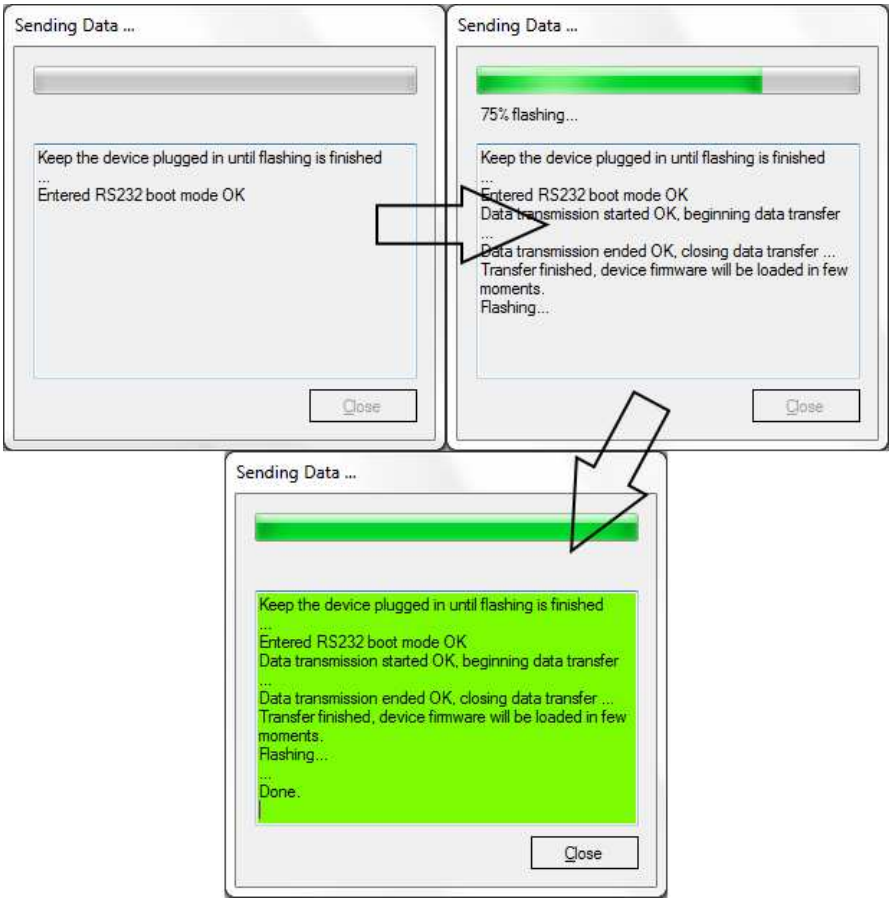

Figure 17. Firmware updating processes

When you see a green table like in **Figure 17**, it means that the firmware is flashed to FM3612 successfully. You may now close the update window and start using your FM3612 device.

5 OPERATIONAL BASICS

5.1 Operational principals

FM3612 module is designed to acquire records and send them to server. Records contain GNSS data and I/O information. Module uses GNSS receiver to acquire GNSS data and is powered with four data acquire methods: time-based, distance-based, angle-based and speed-based method. Note, that if FM3612 loses connection to GNSS satellites, it continues to make records, however coordinate in these records remains the same (last known coordinate). Method's details are described in section 5.13. All data is stored in flash memory and later can be sent via 3G, GPRS or SMS. 3G mode is the most preferred data sending mode. If 3G coverage is not available the device sends data through GPRS network. FM3612 can also be configured to send data over GPRS and SMS only. This mode can be used to save bills or in the areas where 3G is not available. The least preferred data sending mode is SMS, which is mostly used in areas without GPRS coverage or GPRS usage is too expensive.

3G, GPRS and SMS settings are described in further sections. FM3612 communicates with server using special data protocol. Data protocol is described in “FMXXXX Protocols” document.

FM3612 can be managed by SMS commands. SMS Command list is described in SMS COMMAND LIST section. Module configuration can be performed over TCP or via SMS. Configuration parameters and modes are described in “FMXXXX Protocols” document.

5.2 Sleep modes

5.2.1 Sleep mode

FM3612 is able to go to Sleep mode after configured interval of time. While in sleep mode, FM3612 sets GNSS receiver to sleep mode and it isn’t making periodic records (only event records is being recorded with last known coordinate and sent to AVL server). As a result power usage decreases allowing saving vehicle battery.

FM3612 can enter sleep mode if **ALL** of these conditions are met:

- FM3612 has to be configured to work in Sleep mode and Sleep timeout set;
- Device must be synchronized time with GNSS satellites or via NTP;
- No movement by motion sensor is detected;
- Ignition (DIN1) is off;

FM3612 exits sleep mode when if **ONE** of following conditions are true:

- Movement by motion sensor is detected;
- Ignition (DIN1) is turned on;

5.2.2 Deep Sleep mode

While in deep sleep mode, FM3612 sets GNSS receiver to sleep mode and turns off GSM/GPRS/3G module (it is not possible to wake up device via SMS). Despite records with last known coordinate are being saved and send to AVL server (GSM/GPRS/3G module is turned on to send data and after that it is turned off again), power usage is decreased to save vehicle’s battery. Note, that power saving depends on two configurable parameters: send period and min. record saving period.

FM3612 can enter deep sleep mode if **ALL** of these conditions are met:

- FM3612 has to be configured to work in Deep Sleep mode and Sleep timeout set;
- Device must be synchronized time with GNSS satellites or via NTP;
- No movement by motion sensor is detected;
- Ignition (DIN1) is off;
- Min. Record Saving Period (Data Acquisition Mode settings) must be bigger than Active Data Link Timeout parameter, that FM3612 could close GPRS/3G link.
- Difference between send period (Data Acquisition Mode settings) and Active Data Link Timeout must be more than 90 sec., that FM3612 could close GPRS/3G link for at least 90 sec.
- USB cable is not connected.

FM3612 exits deep sleep mode when if **ONE** of following conditions are true:

- Movement by motion sensor is detected;
- Ignition (DIN1) is turned on;
- USB cable is connected;

Note: In order to save 3G/GPRS traffic records saved in deep sleep mode do not contain below listed I/O elements information:
PDOP, HDOP, Odometer, Speedometer, iButton ID, Cell ID, Area Code, Temperature and GNSS power

5.3 Virtual odometer

Virtual odometer is used to calculate traveled distance in FM3612 as a separate I/O element. When FM3612 detects movement, it starts counting distance using GNSS signal: every second it checks current location and calculates distance between current and previous point. It keeps adding these intervals until it is time to make a record, then FM3612 records its location and adds odometer value, which is equal to the sum of all distances, measured every second. When record is made, odometer resets to zero and distance calculation starts all over again.

Virtual odometer as an I/O element can be also used with Trip feature, read chapters 5.4.2 and 5.14.2 for more details.

5.4 Features

Using available features can greatly increase FM3612 usability options.

5.4.1 Scenarios

Green Driving Scenario. Helps to prevent and inspect driver about harsh driving. Scenario continuously monitors: accelerating force, braking force and cornering angles. Warns driver if needed. DOUT1 or DOUT2 is controlled by scenario for user needs, for example buzzer or LED.

To save 3G/GPRS traffic Green Driving **event** will be **generated (included into sent records) only** when measured values are higher than those set in configuration, without additional I/O settings.

To prevent generating false events, harsh acceleration and harsh braking is monitored only when following conditions are fulfilled:

- Ignition is ON (DIN1 = 1)
- Vehicle speed is equal or higher than 10km/h

Harsh cornering is monitored only when following conditions are fulfilled:

- Ignition is ON (DIN1 = 1)
- Vehicle speed is equal or higher than 30km/h

Note: Green Driving Scenario is a factor on various cars and various drivers testing phase and can be subject to changes. Teltonika is constantly working on improvement of the functionality of the devices, and strongly recommends using the latest version of the firmware.

Over Speeding Scenario. Helps to prevent from exceeding fixed speed and inspects driver if needed. DOUT1 or DOUT2 is controlled by scenario for user needs, to manage buzzer, LED, etc.

Authorized Driving Scenario. Gives ability to use vehicle for 500 specific iButton owners (specified in iButton list). DOUT2 or DOUT1 is controlled by scenario for user needs, to manage buzzer, LED, etc.

Note: In order for Authorized driving to work properly, at least 1 iButton ID must be written to the iButton list.

Immobilizer Scenario. Vehicle can be used only if iButton is connected. In this scenario iButton list is not used; connect any iButton to pass Immobilizer security. DOUT2 or DOUT1 is controlled by scenario for user needs, to manage buzzer, LED, etc.

Excessive Idling Detection. Scenario informs you if your vehicle is stationary but engine is on for selected period of time to help you to save fuel.

Jamming scenario. Radio jamming is the (usually deliberate) transmission of radio signals that disrupt communications by decreasing the signal to noise ratio. When jamming detection is enabled, FM3612 informs (with buzzer or LED, connected to DOUT1) driver about jamming event

5.4.2 Trip

Trip customizable feature enables user extended monitoring of performed trips (from engine start at present location to engine stop at arrived location), log their start and stop points, view driven total distance. Event will be **generated (included into send records) only** when trip starts and finishes. This feature is available on all FM3612 hardware versions without limitations.

Note: Scenarios and Trip features are activated (DOUTs are activated) only if DIN1 = 1 (ignition is on).

5.4.3 Geofencing

Geofencing is another feature which is highly customizable and can detect wherever car enters or leaves customized areas. More about Geofencing can be read in 5.14.3 chapter.

Auto Geofencing feature if enabled is activated automatically by turning off car ignition. Next time before driving user has to disable Auto Geofencing with iButton or by turning on car ignition. In case of theft car leaves Auto Geofencing zone without authorization high priority record to AVL application is sent automatically.

5.4.4 iButton list

iButton list is used to enter authorized iButton ID codes, which are used to authenticate driver in Authorized driving and Auto Geofencing options.

5.5 CONFIGURATION

5.6 Configurator

New FM3612 module has default factory settings. Settings should be changed according to your application and your GSM operator information.

FM3612 configuration is performed via FM3612 Configurator program. Contact sales manager to get the latest FM3612 Configurator version. FM3612 configurator operates on Microsoft Windows OS and uses MS .Net Framework 3.5 or higher. Please ensure that MS .Net Framework 3.5 or later is installed on your PC before starting configurator. Latest MS .Net Framework version can be downloaded from official Microsoft web page.

Module configuration is performed over USB cable. Configuration process starts from starting FM3612 Configurator program and then connecting to FM3612 device via Connect button located on the top left corner of configurator. If connected successfully IMEI, Version fields which were empty, now are filled with certain numbers depending on Modem IMEI and firmware version of your device (figure below).

FM3612 has one user editable profile, which can be loaded from device, and saved. User can also revert to default settings, by pressing Load Defaults button. After any modification of configuration settings it has to be saved to FM3612 device, otherwise it will not be written to device.

FM3612 has 2 configuration modes: Recommended Configuration (Figure 18) and Advanced Configuration (Figure 19).

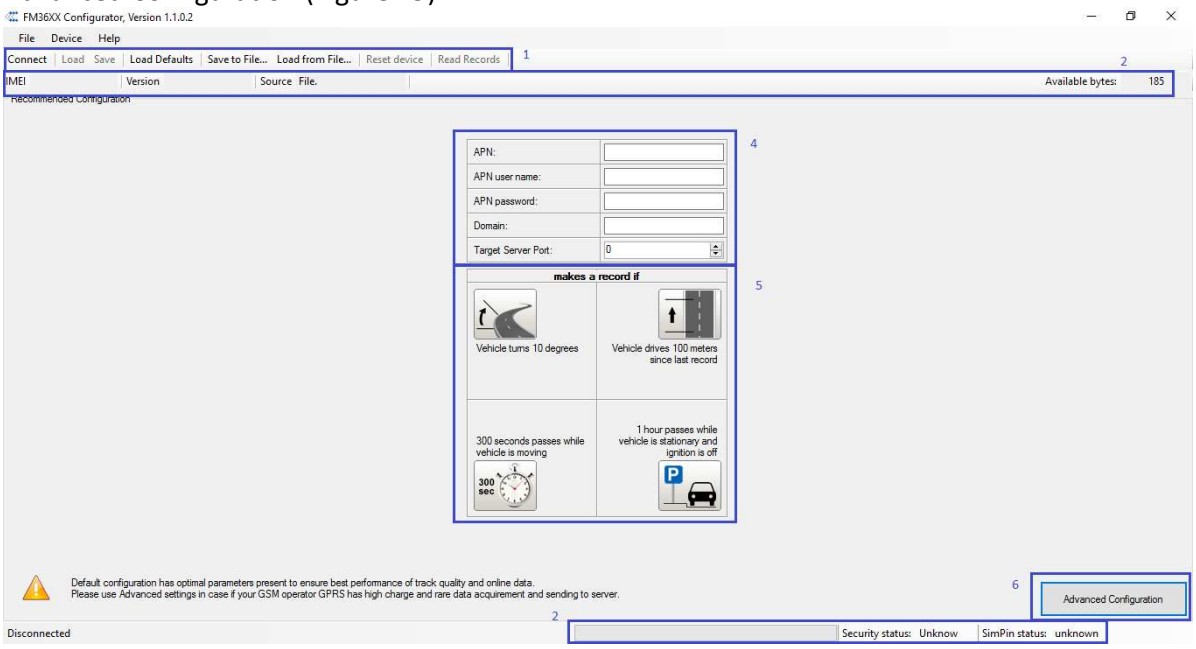

Figure 18. Recommended Configuration window

Recommended Configuration mode uses predefined data acquisition values. In this configuration mode it is only required to enter network parameters. In Advanced Configuration mode FM3612 is more configurable.

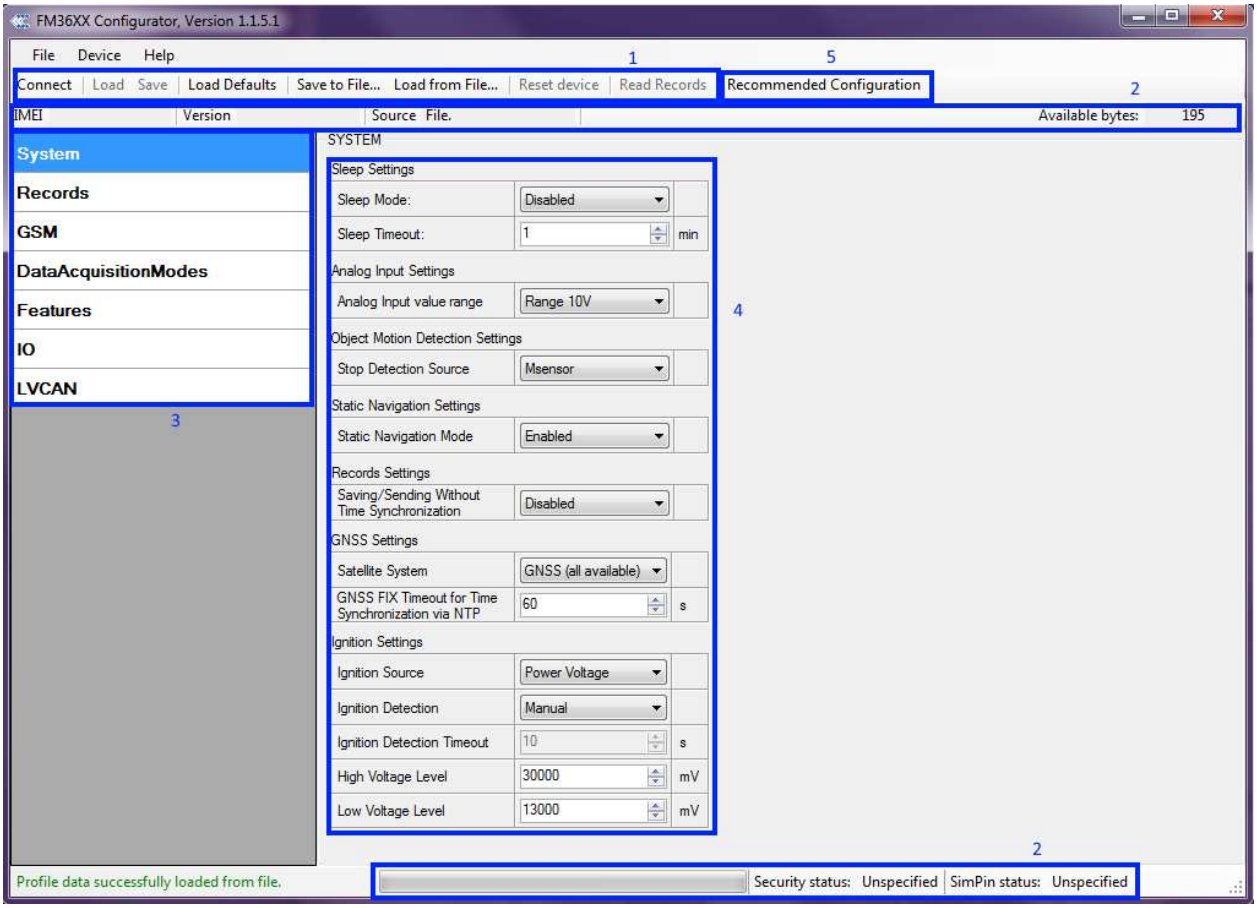

Figure 19. Advanced Configuration window

FM3612 Configurator is divided into main areas: 1 – main button area, 2 – information area, 3 –settings menu, 4 – parameters and values menu, 5 – recommended configuration values.

Button 6 is used to change between configuration modes.

Main Buttons description:

'Connect' – connects device

'Load' – reads configuration parameters from FM3612 Flash memory.

'Save' – saves configuration parameters to FM3612 Flash memory.

'Load Defaults' – loads default FM3612 settings that later can be modified. This procedure must be performed before entering new parameters.

'Save to File…' – allows user to save currently entered settings to .XML file, for later usage.

'Load from File…' – allows user to load configuration saved in .XML extension file.

'Reset device' – reboots FM3612 and displays processor firmware version.

Additional Buttons description:

'Add Keyword' / 'Change Keyword' / 'Switch Security Off'– buttons are used to protect configurator from unauthorized access to configuration.

Keyword is 4 – 10 symbol length. If keyword is set, every time user reconnects FM3612 to USB port, user will be asked to provide valid keyword when connecting FM3612 to configurator. User is given 5 attempts to enter keyword. After entering valid keyword, counter resets to 5.

If user disconnects FM3612 using 'Disconnect' button and does not disconnect from USB port, after reconnecting using 'Connect' button, configurator does not ask for keyword.

ATTENTION! If you have entered a keyword, disconnected from the configurator and then later connected again, you will need to enter the keyword that you have entered previously. If you have forgotten it, please contact your local sales manager.

5.7 Read records

When the FM3612 is working in offline mode, it can save up to 3854 records. Since these records are not sent to the server, they can be downloaded directly to connected computer using USB connection. When you connect FM3612 device, FM3612 Configurator appears with additional option "Read Records" (Fig. 20).

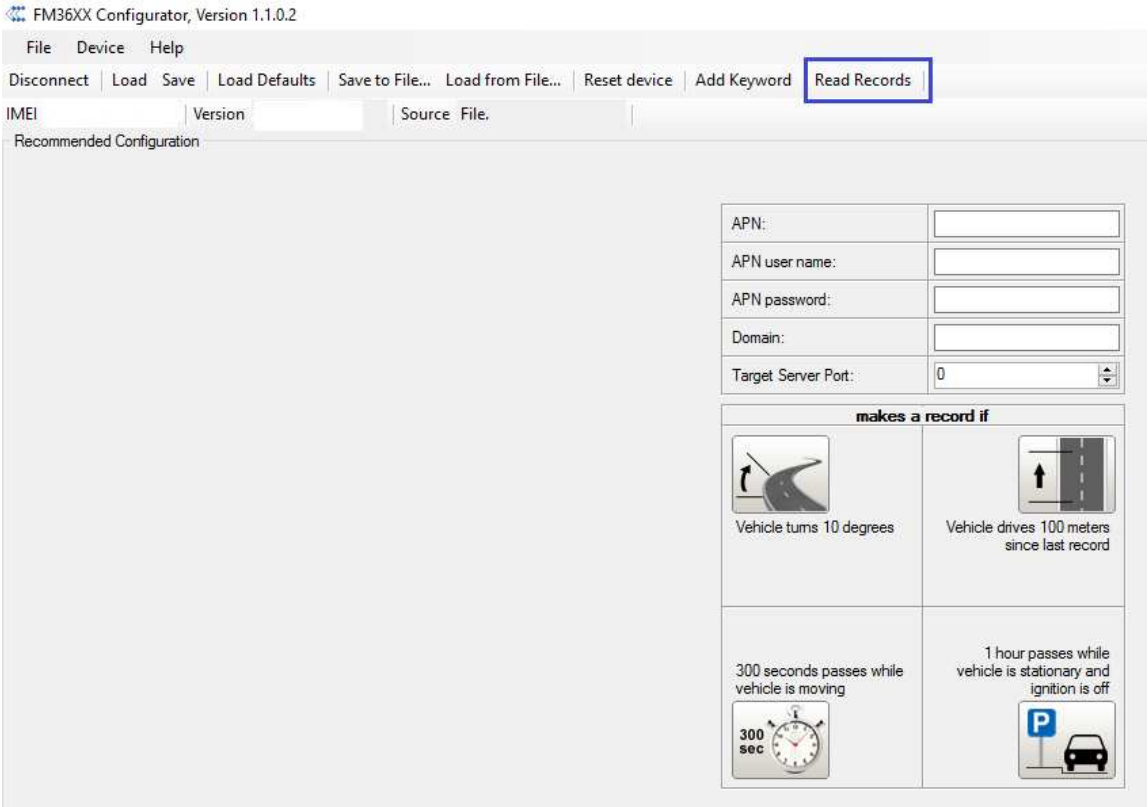

Figure 20. FM36XX Configurator window with FM3612 connected

After device is switched on, you have to wait 3 minutes for device to startup. Only then it is possible to download records. If the memory is fully filled, the records reading may take several minutes. After reading records, all records are deleted from the device memory. Data records are stored in a binary file on your PC. You can upload these records from file to TAVL server and access all the data from TAVL.

TAVL client application lets user to use the following features:

- Import data file saved from the device to the TAVL;
- Preview track of the imported data;
- Generate reports of the imported data.

More details on how to use TAVL application please refer to "TAVL3 application user manual v1.4" documentation or its later versions.

It can be configured to acquire and send data to server. It will be possible to store up to 3854 data records if GSM is not available at the moment. It will send data later when GPRS is available again. Note that FM3612 can have memory full of records. In such a case it will start deleting oldest records in order to save new ones. Sending all the data records to server may take some time. Sending 3854 records for
FM3612 may take for about 5 hour (exact time may differ depending on GPRS/server load).

5.8 System settings

System settings have 7 configurable parameters:

- Sleep settings, where user can turn GPS sleep/deep sleep on or off;
- Analog Input Settings, where user can choose analog input range 10 V or 30 V, depending on needed accuracy (lower range gives higher accuracy of measurements), and input voltage;
- Object Motion Detection Settings, where user can configure 3 ways how FM3612 will detect stopped movement, and change its working mode (for working modes, read section 5.13)
- Static navigation settings, where user can turn static navigation on or off;
- Records Settings, where user can enable or disable records when GPS is not available (no time synchronization);
- GNSS Settings, where user can choose satellite system and GNSS FIX Timeout Time (if after timeout there will not be synchronized time, it will be synchronized via NTP server).
- Ignition Source sets ignition triggered functionalities to be triggered by:
    - Power Voltage (if voltage is between High Voltage Level and Low Voltage Level the ignition is considered to be turned on);
    - Digital Input (DIN1 ON – ignition on, DIN1 OFF – ignition off);
    - Movement (if accelerometer/movement sensor detects movement then ignition is on, if movement stops – ignition is off).

Stop Detection Source	Vehicle on Stop mode	Vehicle Moving mode
Ignition (recommended)	If ignition (configured Ignition Source) is logic low	If ignition (configured Ignition Source) is logic high
Msensor (movement sensor)	Internal movement sensor does not detect movement	Internal movement sensor detects movement
GPS	GNSS fix is available and vehicle speed is lower than 5 km/h	GNSS fix is available and vehicle speed is higher than 5 km/h
	While GNSS fix is unavailable, Object Motion Detection Settings are working like in Msensor mode	

Static Navigation Mode is a filter, which filters out track jumps when the object is stationary. If Static navigation filter is disabled, it will apply no changes on GNSS data. If Static navigation filter is enabled, it will filter changes in GNSS position if no movement is detected (depends on Object Motion Detection Settings). It allows filtering GNSS jumps when object is parked (is not moving) and GNSS position is still traced.

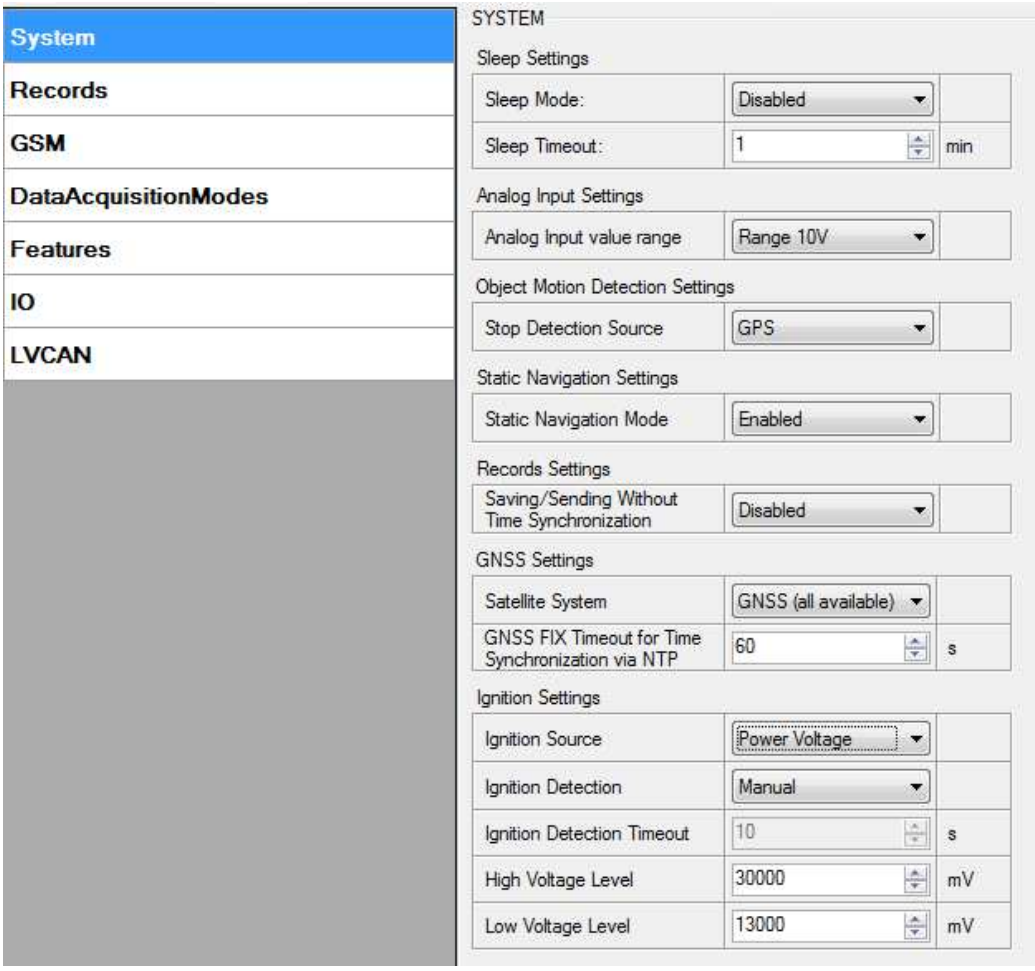

Figure 21. System settings configuration

Also if Power Voltage is chosen for ignition source there is possibility to choose Manual ignition detection or automatic ignition detection. For manual ignition user has to choose power voltage levels by himself. For automatic ignition FM3612 automatically detects ignition, ignition is on if power voltage is between 13,2 – 16 V, or 27 – 32 V.

5.9 Records settings

Here user can modify if FM3612 device will send newest records first, meaning, that the most important thing is to know recent position of car, older records are being sent right after newest records arrive to AVL application.

Activate Data Link Timeout is used to set timeout of link between FM3612 and AVL application termination. If FM3612 has already sent all records it waits for new records before closing link. If new records are generated in the period of this timeout, and minimum count to send is reached, they are sent to AVL application. This option is useful when GSM operator charge for link activation.

Server Response Timeout is used to set time period waiting for response from server side.

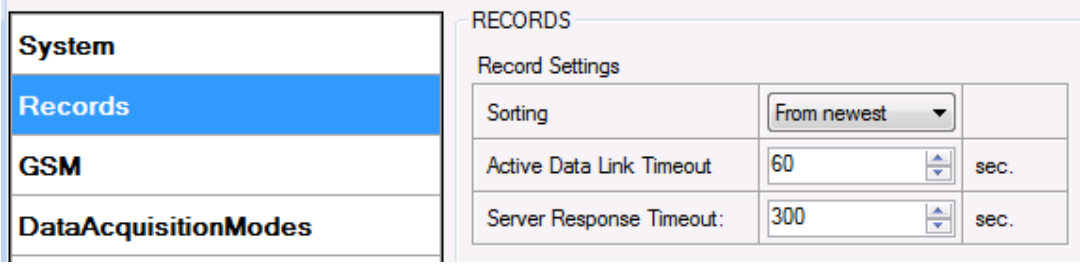

Figure 22. Records settings configuration

5.10 GSM settings, GPRS part

'GPRS' defines main parameters for FM3612: GSM operator APN and GPRS username and password (optional – depending on operator), destination server IP and port, and allows to set protocol used for data transfers – TCP or UDP.

Yet user can choose if device will work only in GSM network, or it will prefer 3G network and switch to GSM only then 3G is absent.

Some operators use specific authentication for GPRS session – CHAP or PAP. If any of these is used, APN should be entered as '`chap:<APN>`' or '`pap:<APN>`'. I.e. if operator is using APN 'internet' with CHAP authentication, it should be entered as '`chap:internet`'. Information about APN and authentication type should be provided by your GSM operator.

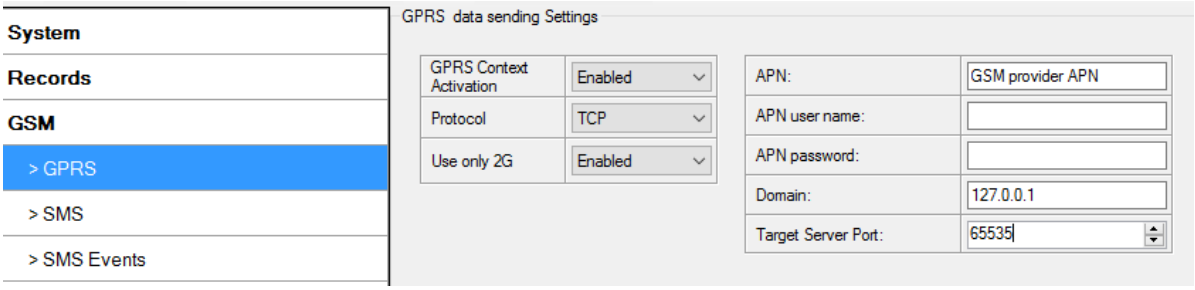

Figure 23. GPRS configuration

5.11 GSM settings, SMS part

Essential fields in 'SMS' part are 'Login' and 'Password'. The login and password are used with every SMS sent to FM3612. If login and password are not set, in every SMS sent to FM3612 device two spaces before command have to be used (<space><space><command>).

Command structure with set login and password:

<login><space><password><space><command>, example: "opa opa getgps"

Phone numbers have to be written in international standard, without using "+" or "00" signs in prefix. If no numbers are entered, configuration and sending commands over SMS are allowed from all GSM numbers.

SMS data sending settings – enable or disable **periodic** data and event SMS usage. This setting does not affect replies to SMS request messages – answers are always sent back to sender telephone number.

FM3612 can send binary SMS with 24-coordinates-in-one-SMS. It is used in areas where no GPRS coverage is available. Module collects data and sends to server binary SMS containing information about last 24 collected points. SMS sending schedule is set in SMS Week Time tab and used Time zone is set in SMS Time Zone. 24-Coordinates SMS decoding is described in device protocols documentation. Please contact Teltonika sale manager to find out more about protocols documentation purchase

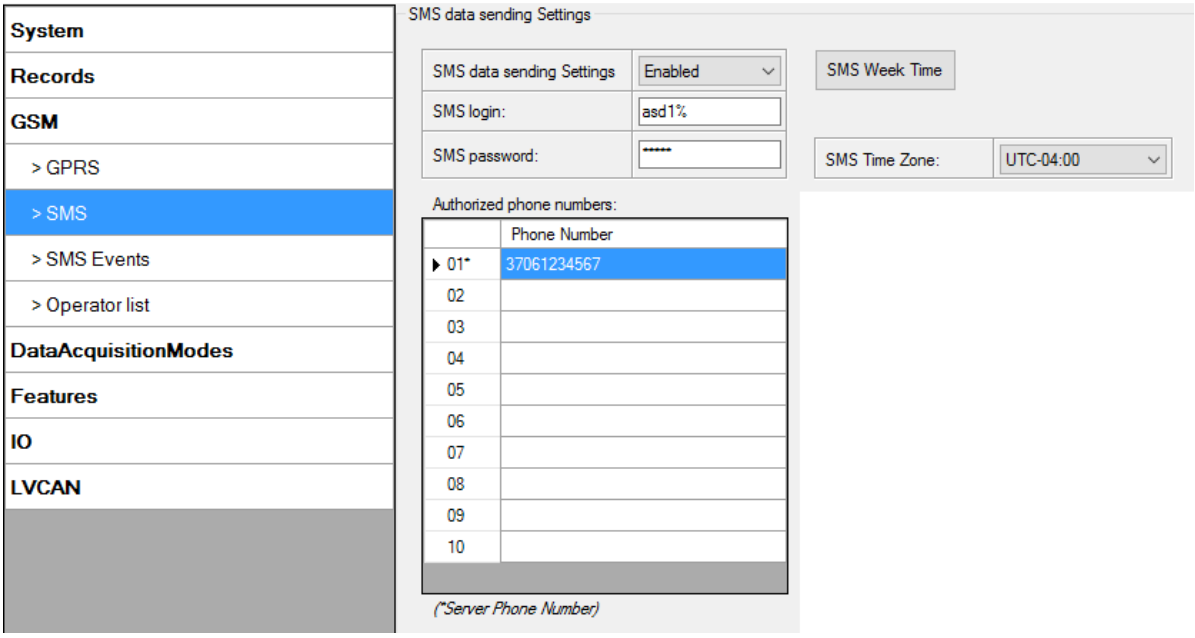

Figure 24. SMS configuration

Note: A mobile phone will not understand SMS with binary code, so sending it to a mobile phone is useless. When sending a binary SMS to a phone number, which is a server phone number, the server can interpret and understand binary code, so the data can be read and you can view it on the server.

SMS login and password and authorized number list are used to protect FM3612 module from unauthorized access. Module accepts messages only from a list of authorized numbers and with proper module login and password. Numbers must be without "+" or "00" prefix. If no authorized numbers are entered, module accepts messages from all numbers.

5.12 GSM settings, Operator list

Operators list – FM3612 can work in different modes (use different settings) according to the operator list defined. Operator list is used for Data Acquisition Mode switching (see chapter 5.13 Data Acquisition Mode settings for more details). Modes are changed based on 3G/GSM operator FM3612 is connected to.

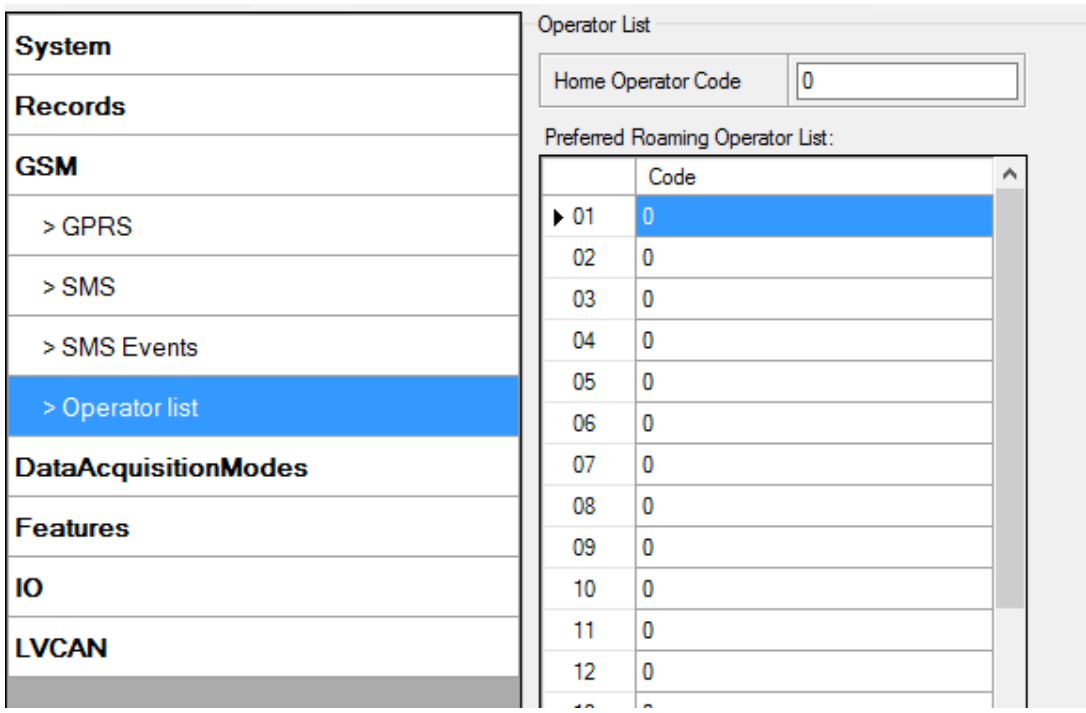

Figure 25. Operator list configuration

If operator list is left empty, it will allow using GPRS to any GSM operator. Please note that FM3612 will work in **Unknown mode only** (make sure it is configured to allow data sending – GPRS context is enabled).

5.13 Data Acquisition Mode settings

Data Acquisition Modes are an essential part of FM3612 device, it is also highly configurable.

By configuration user defines how records will be saved and sent. There are three different modes: Home, Roaming and Unknown. All these modes with configured data acquisition and send frequencies depend on current GSM Operator defined in Operator list (see section 5.12) and are switched when GSM operator changes (e.g. vehicle passes through country boarder).

If current GSM operator is defined as Home Operator, device will work in Home Data Acquisition mode, if current operator is defined as Roaming Operator, device will work in Roaming Data Acquisition mode, and if current operator code is not written in Operator list (but

there is at least one operator code in the operator list), device will work in Unknown Acquisition mode.

This functionality allows having different AVL records acquire and send parameters values when object is moving or stands still. Vehicle moving or stop state is defined by Stop Detection Source parameter. There are 3 ways for FM3612 to switch between Vehicle on Stop and Vehicle Moving modes see section 5.7.

FM3612 allows having 6 different modes. Operational logic is shown in Figure 26.

If there are no operator codes entered into operator list, FM3612 will work in Unknown network mode ONLY.

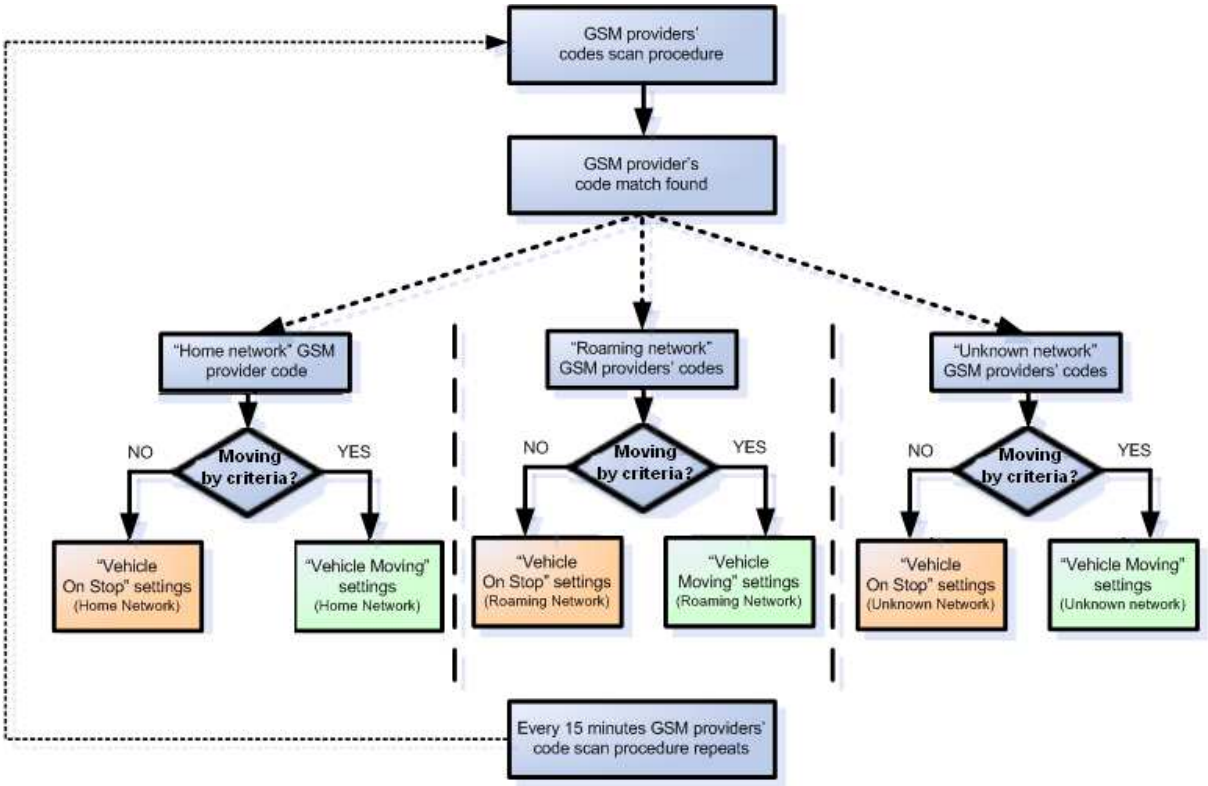

Figure 26. Data Acquisition Mode configuration

Operator search is performed every 15 minutes. Depending on current GSM operator, Home, Roaming or Unknown mode can be changed faster than every 15 minutes. This process is separate from operator search. Movement criteria are checked every second.

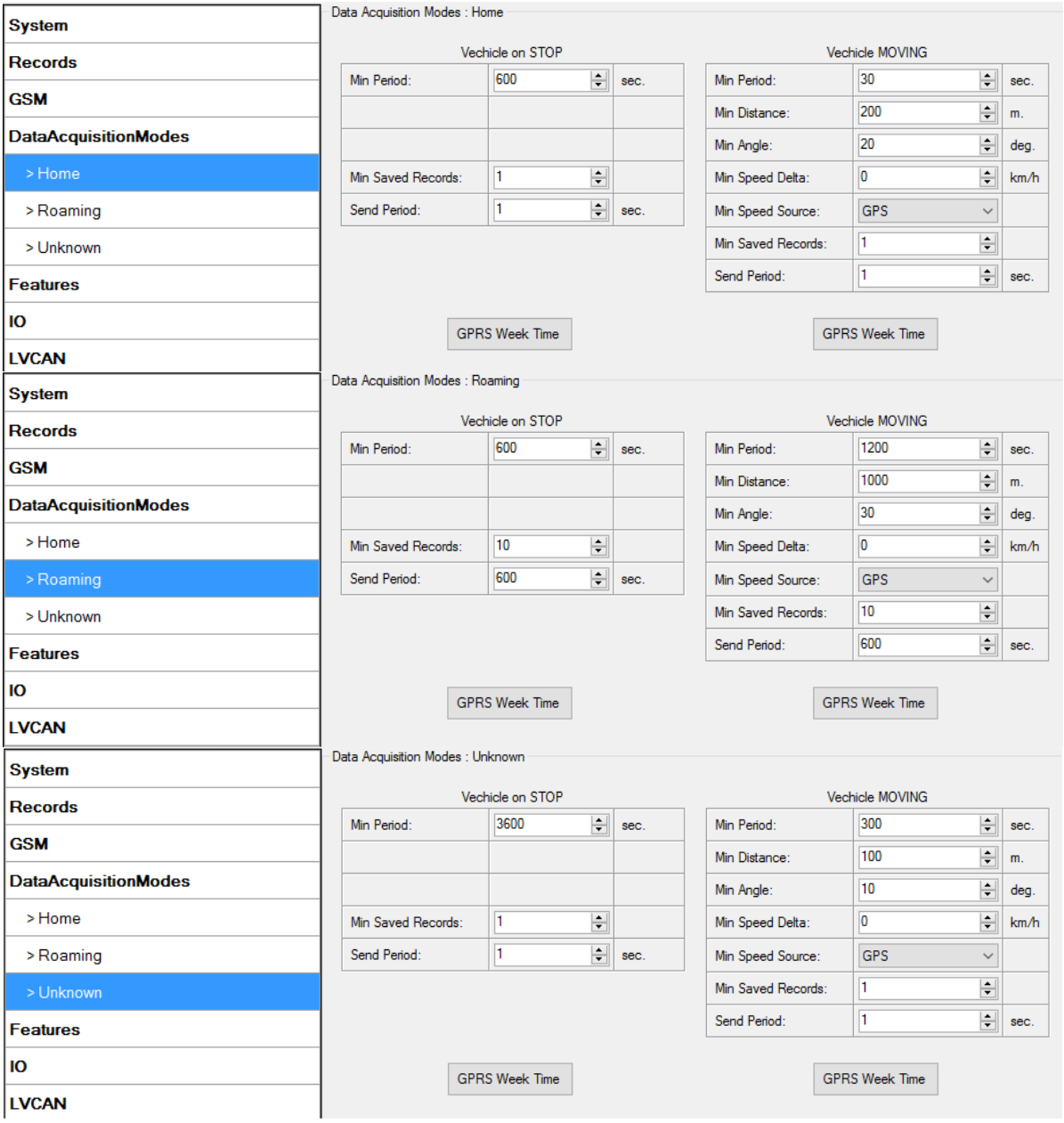

Figure 27. Data Acquisition Mode configuration

'Min Saved Records' defines minimum number of coordinates and I/O data that should be transferred with one connection to server. If FM3612 does not have enough coordinates to send to server, it will check again after time interval defined in 'Sending Period'

Send period – GPRS data sending to server period. Module makes attempts to send collected data to server every defined period. If it does not have enough records (depends on parameter Min. Saved Records described above), it tries again after defined time interval.

GPRS Week Time tab – most GSM billing systems charge number of bytes (kilobytes) transmitted per session. During the session, FM3612 makes connection and transmits data to a

server. FM3612 tries to handle the session as much as possible; it never closes session by itself. Session can last for hours, days, weeks or session can be closed after every connection in certain GSM networks – this depends on GSM network provider. GPRS Context Week Time defines session re-establish schedule if session was closed by network. New GPRS context is opened if time is 10 minutes till time checked in table. Therefore if all boxes are checked, FM3612 is able to open new connection anytime. At scheduled time match FM3612 checks for GPRS session activity. If GPRS session is alive, FM3612 sends data to server according to Send period parameter. If it is not, FM3612 checks if it is able to re-establish the session.

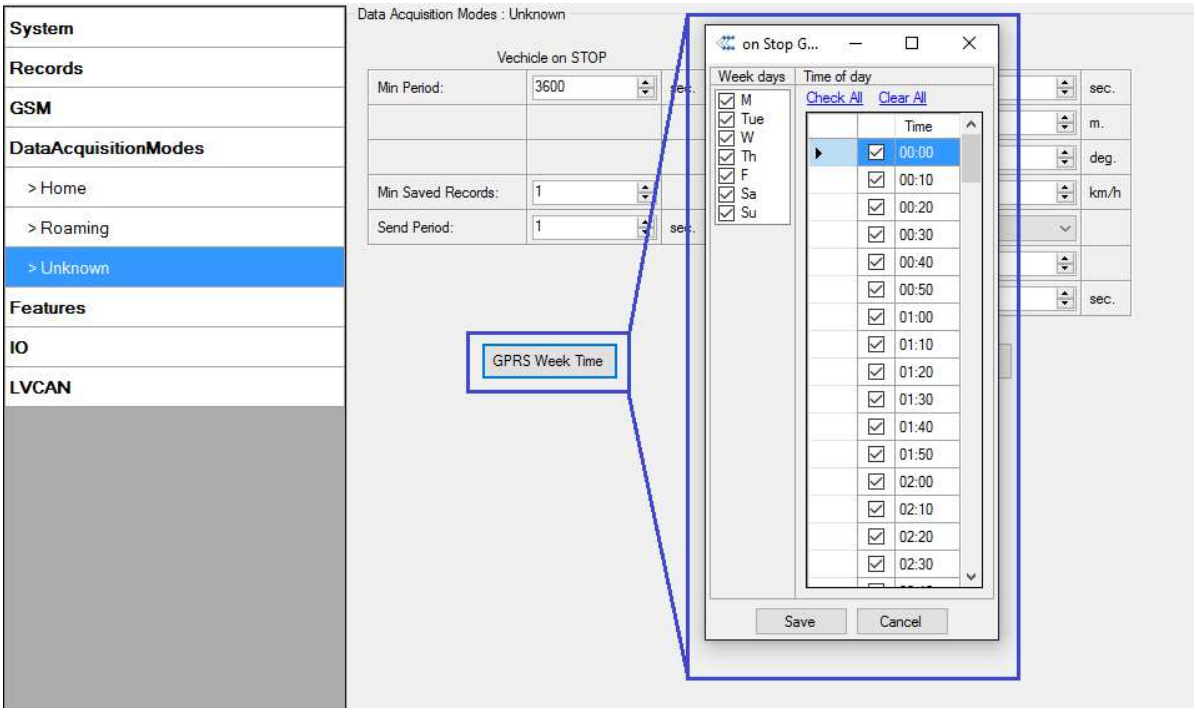

Figure 28. GPRS Week Time configuration

Device checks if the time between last saved record and current time is equal or higher than Time based acquire interval. If so, FM3612 saves record to memory. If not, FM3612 checks if the distance from last record to current record is equal or higher than Distance based acquire interval. If so, saves the record to memory. If not and speed is higher than 10km/h, then FM3612 checks if angle difference between last record and current record is equal or higher than Angle based acquire value. If so, saves the record to memory. These checks are performed every second.

Note: Keep in mind that FM3612 operates in GMT:0 time zone, without daylight saving.

FM3612 is able to collect records using four methods at the same time: time, distance, angle and speed based data acquisition:

Time based data acquiring (Min. period) – records are being acquired every time when defined interval of time passes. Entering zero disables data acquisition depending on time.

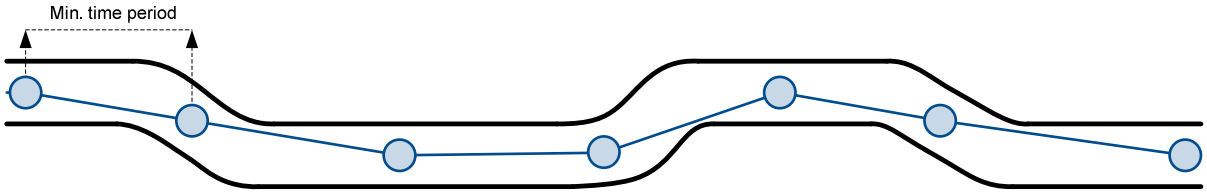

Distance based data acquiring (Min. distance) – records are being acquired when the distance between previous coordinate and current position is greater than defined parameter value. Entering zero disables data acquisition depending on distance.

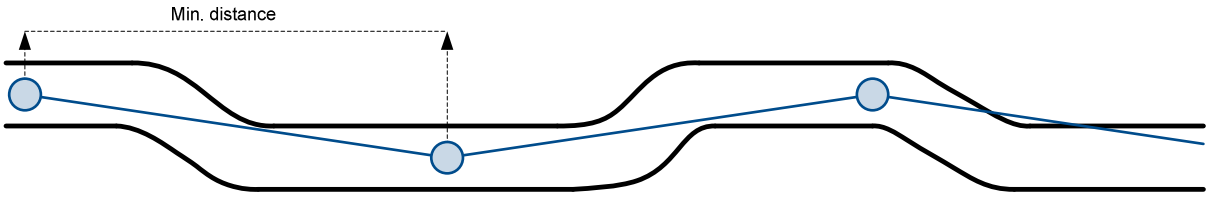

Angle based data acquiring (Min. angle) – records are being acquired when angle difference between last recorded coordinate and current position is greater than defined value. Entering zero disables data acquisition depending on angle.

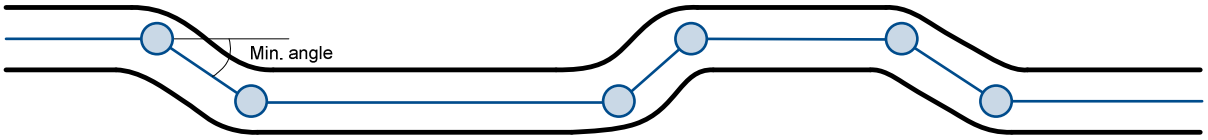

Speed based data acquiring (Min. speed delta) – records are being acquired when speed difference between last recorded coordinate and current position is greater than defined value. Entering zero disables data acquisition depending on speed.

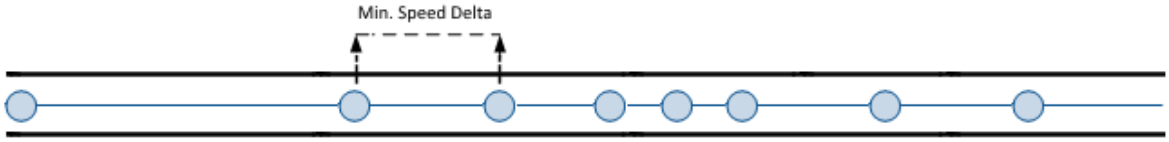

5.14 Features settings

For more information about available Scenarios, Trip, Geofencing and iButton list, refer to 5.4 chapter.

5.14.1 Scenarios settings

In Scenarios window six different scenarios are available: Green driving, Over Speeding, Excessive Idling, Immobilizer, iButton List checking and Jamming. All scenarios can use DOUT together, but if DOUT1 is assigned to Immobilizer, other scenarios can't control it.

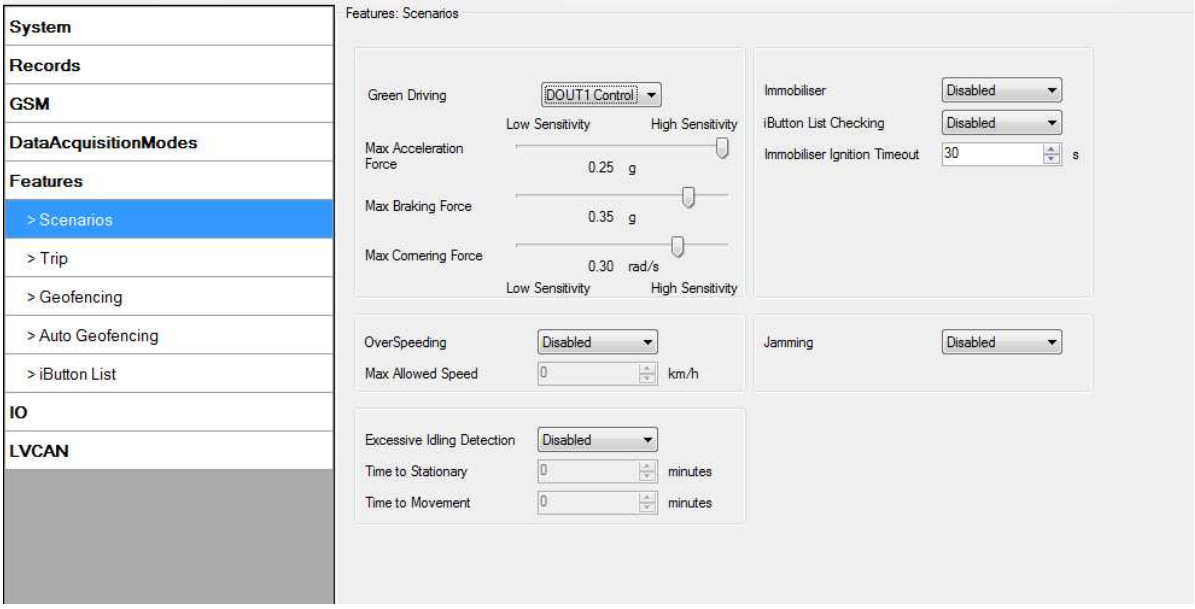

Figure 29. Scenarios configuration

Digital Output (open drain grade) usage in scenarios:

- Green Driving

  DOUT1 is ON (if selected DOUT1) for:
  - 3sec. if detected value is over (0; 30] % from preconfigured allowed value;
  - 5sec. if detected value is over (30; 50] % from preconfigured allowed value;
  - 7sec. if detected value is over (50; -] % from preconfigured allowed value.

  After period of time DOUT1 is turned OFF.

- Over Speeding

  DOUT1 is ON (if selected DOUT1), while vehicle speed exceeds parameter value. DOUT1 is activated until current speed decreases below parameter value.

- Excessive Idling Detection.

If ignition is ON and no movement, event will be generated when TMO reached. User can enable this functionality, select timeouts for stationary time and for movement time.

- Jamming detection (if selected DOUT1)

DOUT1 is ON, while modem is fixing radio frequency jamming. After jamming is over, DOUT1 is deactivated.

- Authorized driving (if selected DOUT2)

DOUT2 is continuously OFF. Dout2 turns ON if Ignition turns ON (configured Ignition Source =1). After authorizing iButton (iButton ID is read and it matches the ID from the iButton list), DOUT2 turns OFF. After successful authorization ignition can be turned OFF (configured Ignition Source =0) for no longer than 30 seconds, otherwise authorization must be repeated.

- Immobilizer (if selected DOUT2)

DOUT2 is continuously OFF. Dout2 turns ON if Ignition turns ON (configured Ignition Source = 1). After iButton ID is read (any iButton is attached), DOUT2 turns OFF. After iButton identification, ignition can be turned OFF (configured Ignition Source = 0) for no longer than 30 seconds, otherwise immobilizer must be repeated.

5.14.2 Trip settings

Trip window offers user to configure Trip feature. If Trip is enabled configuration of parameters are enabled.

Start Speed – GNSS speed has to be greater than the specified Start Speed in order to detect Trip Start.

Ignition Off Timeout – timeout to wait if ignition was off, to detect Trip stop.

Distance Mode – Between records, Continuous trip or Continuous can be chosen. For this feature I/O Odometer must be enabled (see Figure 30).

If I/O Odometer is enabled and Distance Mode variable is set to “Continuous trip”, **Trip distance** is going to be counted continuously (**from Trip start to Trip stop**). This value is written to I/O Odometer value field. When Trip is over and next Trip begins, Odometer value is reset to zero. When the next trip starts counting continuously starts from the beginning again.

If I/O Odometer is enabled and Distance Mode variable is set “Between records”, then the distance is going to be counted only between every record made. This value is written to I/O Odometer value field and reset to zero every new record until Trip stops.

If I/O Odometer is enabled and Distance Mode variable is set “Continuous”, **Trip distance** is going to be counted continuously (Starting from trip start, trip distance is saved to flash memory).

Continuous Odometer Value – gives ability to set starting value of the “Continuous” trip.

Remember iButton ID – devices remembers connected iButtons id(While trip is detected) and sends it to server along with periodical records.

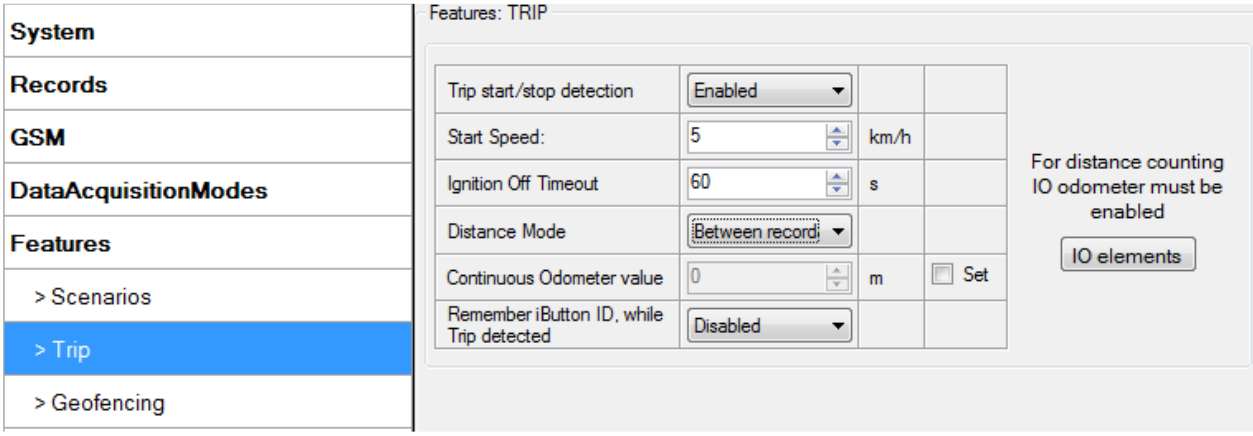

Figure 30. Trip configuration

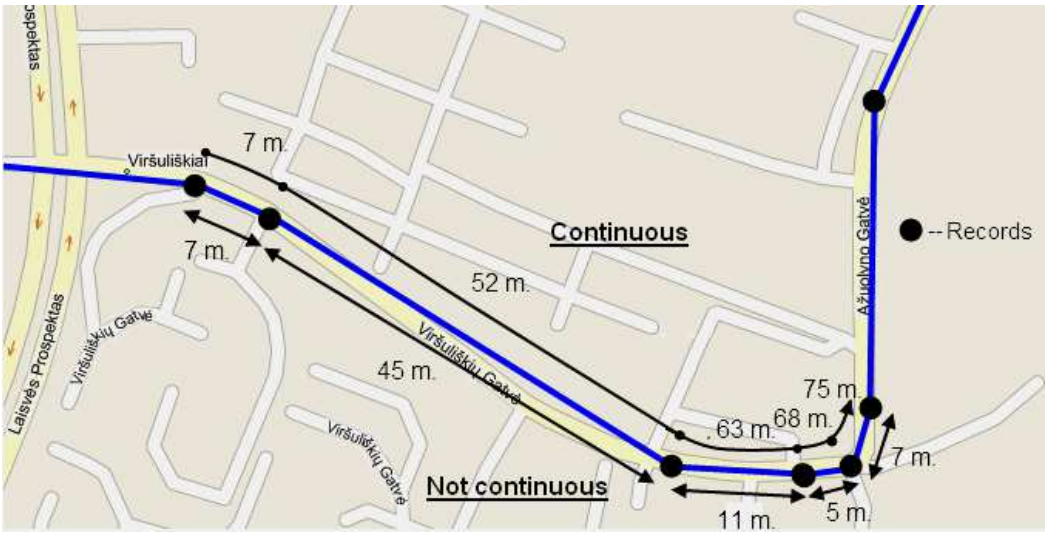

Figure 31. Trip continuous distance counting parameter example

5.14.3 Geofencing settings

FM3612 has 5 configurable Geofence zones and it can generate an event when defined Geofence zone border is crossed.

Frame border – frame border is an additional border around Geofence zone. It is additional area around defined zone used to prevent false event recording when object stops on the border of the area and because of GNSS errors some records are made inside area and some – outside. Event is generated only when both borders are crossed. See figure 32 for details: track 1 is considered to have entered the area while track 2 is not.

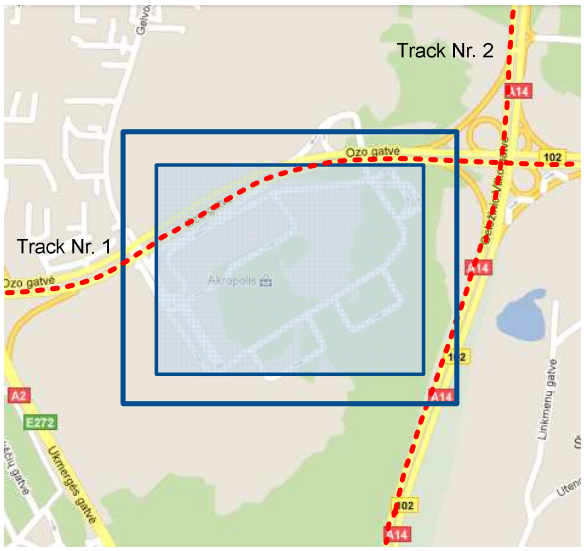

Figure 32. Geofence border

Shape – can be rectangle or circle

Priority – priority of Geofence event: low, high or panic. These levels define priority of event information sending to server. See I/O element description for more details about priorities.

Generate event (On entrance, On exit, On Both) – choose when record will be generated;

X1 – geofence zone left bottom corner X coordinate (longitude);

Y1 – geofence zone left bottom corner Y coordinate (latitude);

X2 or R – geofence zone upper right corner X coordinate (longitude) or radius of circle when Circular zone is used (radius in meters);

Y2 – geofence zone upper right corner Y coordinate (latitude);

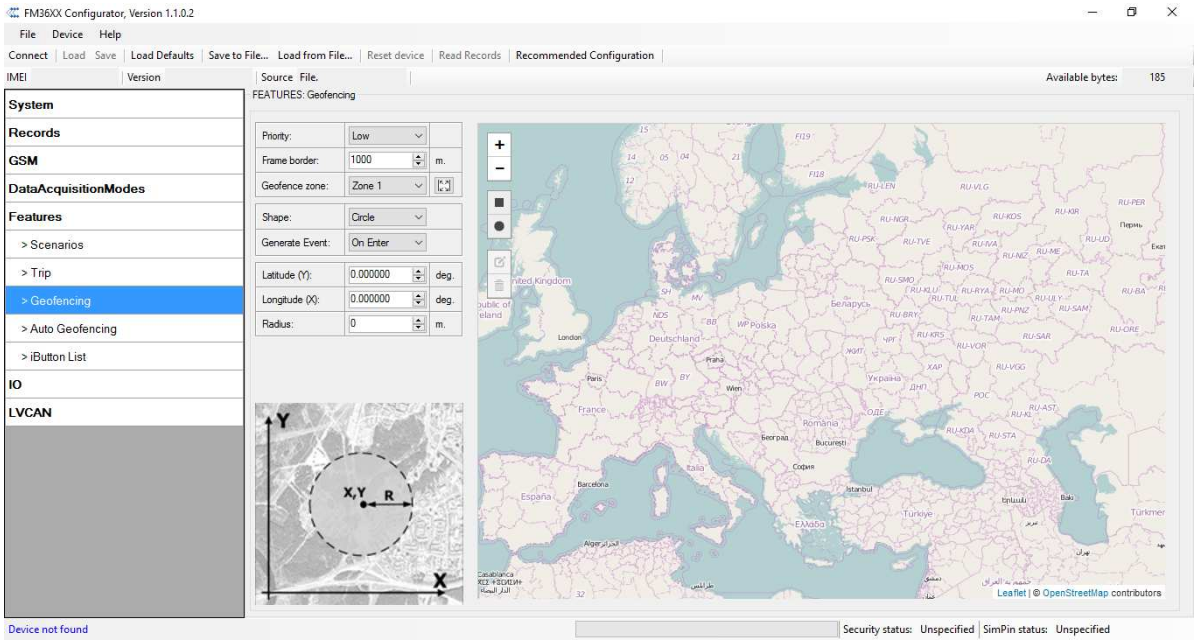

Figure 33. Geofence configuration

AutoGeofencing settings

AutoGeofence – the last known position after movement = off. If your car's being taken away – you can be notified. The shape and size of the geofence zones are parameters. When object will leave geofence zone device will trigger an asynchronous message.

AutoGeofencing option can be configured by following parameters visible in Figure 34 below.

Activation TMO – Time period before Geofence is activated after vehicle stops.

Deactivate By:

Ignition – If ignition (configured Ignition Source) becomes high it will disable AutoGeofenze Zone.

iButton – if iButton is attached it will disable AutoGeofence Zone.

Edit iButton List – if list is not empty, attached iButton is tested against an iButton list, if match is found AutoGeofence zone is disabled.

Priority – Priority of generated event, which will be applied to saved record.

Exit Event – Event generation on Geofence exit.

On Both – Event generation on Geofence exit.

Note that AutoGeofencing does not require entering coordinates, instead it requires GNSS visibility. If vehicle stopped and activation timeout has passed, an AutoGeofence will be created around vehicle's last position with set Radius value. AutoGeofence event generation works the same as Geofencing mentioned above.

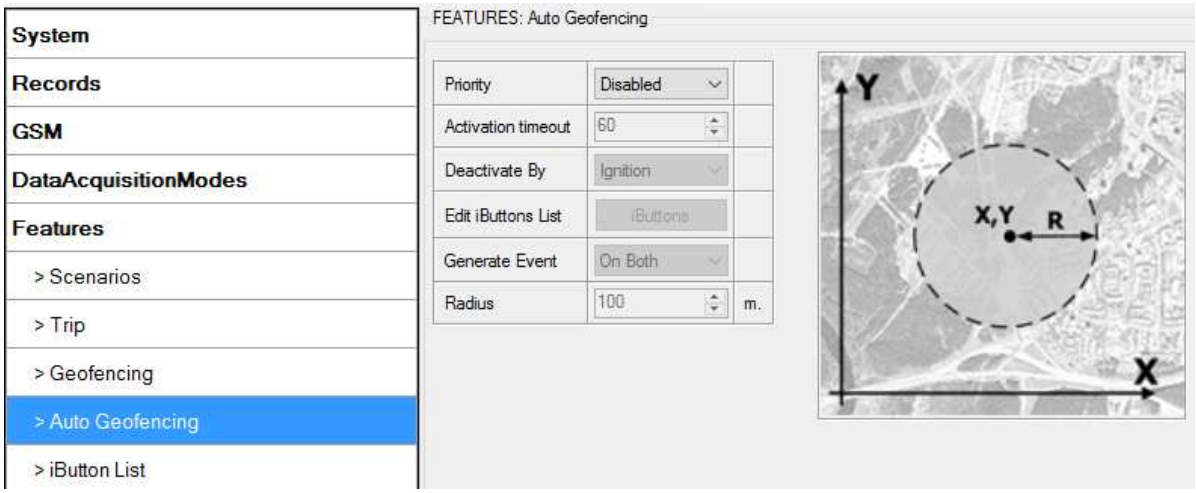

Figure 34. Geofence configuration

Note: FM3612 operates GMT:0 time without daylight saving.

5.14.4 SMS events

SMS events functionality allows FM3612 to send a configured SMS when an event is triggered. This event can be triggered by:

- Green Driving;
- OverSpeeding;
- Authorized Driving;
- Immobilizer;
- Trip start/stop;
- Geofence;
- AutoGeofence;
- I/O event.

When any of the above events is triggered, FM3612 sends a configured SMS message to a defined phone number. If SMS events is activated, but there are no numbers defined in SMS events PreDefined Numbers list (figure 35), then the device will not send any messages.

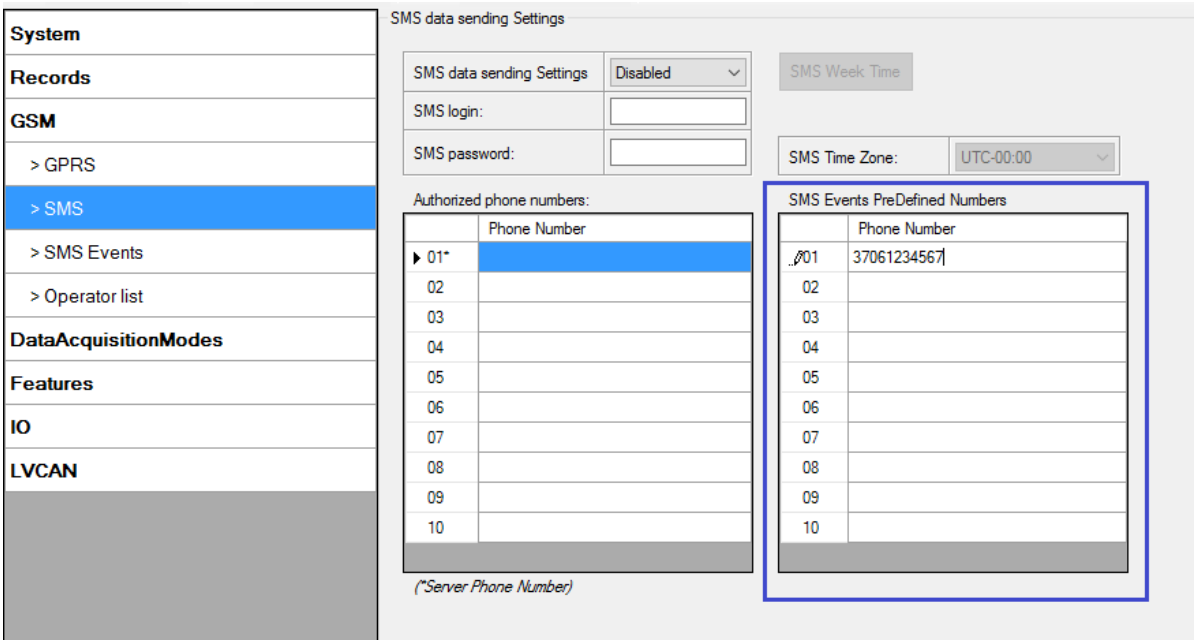

Figure 35. SMS Events PreDefined Numbers list

The sent SMS messages format is according to:

"Date Time EventText"

For example, if FM3612 is configured to send an SMS (figure 36), when Digital Input 1 reaches High level, with priority High and configured to generate event on both range enter and exit (figure37), then the sent SMS is:

"2016/1/20 12:00:00 Digital Input 1"

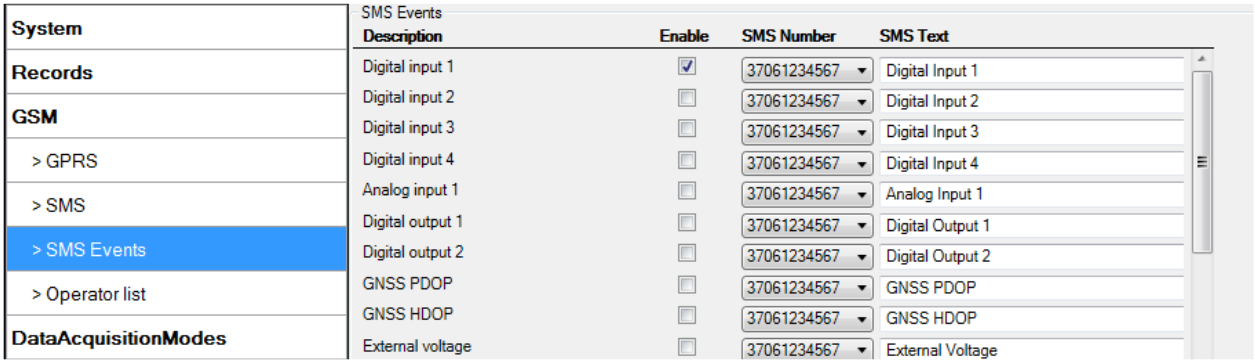

Figure 36. Configured Digital Input 1 SMS Event

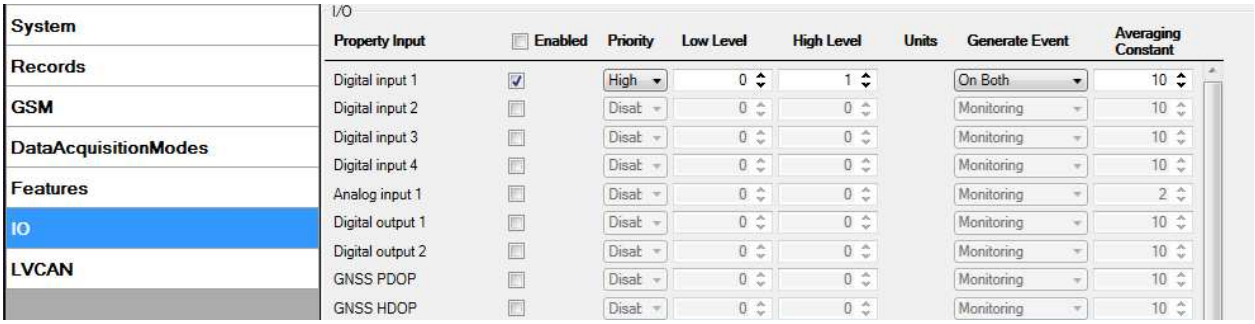

Figure 37. Configured Digital Input 1 to generate event on both range enter and exit

The SMS Text field can be altered and any text can be entered. Maximum message length is 90 symbols (numbers, letters and symbols in ASCII, except for comma “,”).

ATTENTION!
If FM3612 is in Deep Sleep mode and SMS event occurs with LOW priority (which does not wake up FM3612), then the device does not send the message. It is saved in device memory until it wakes up from Deep Sleep mode and GSM modem starts working normally. After it wakes up, all the messages that are saved in memory will be sent, but keep in mind that only 10 messages can be saved in memory – all other messages will not be saved, until there is room in device memory.

5.14.4.1 SMS events configuration

Scenarios

To configure SMS events for scenarios, open Scenarios window and Enable desired scenario. Then go to GSM ->SMS -> SMS events window and activate SMS event for Enabled scenario. Figure 38 shows how to enable Green Driving and Immobilizer SMS Events.

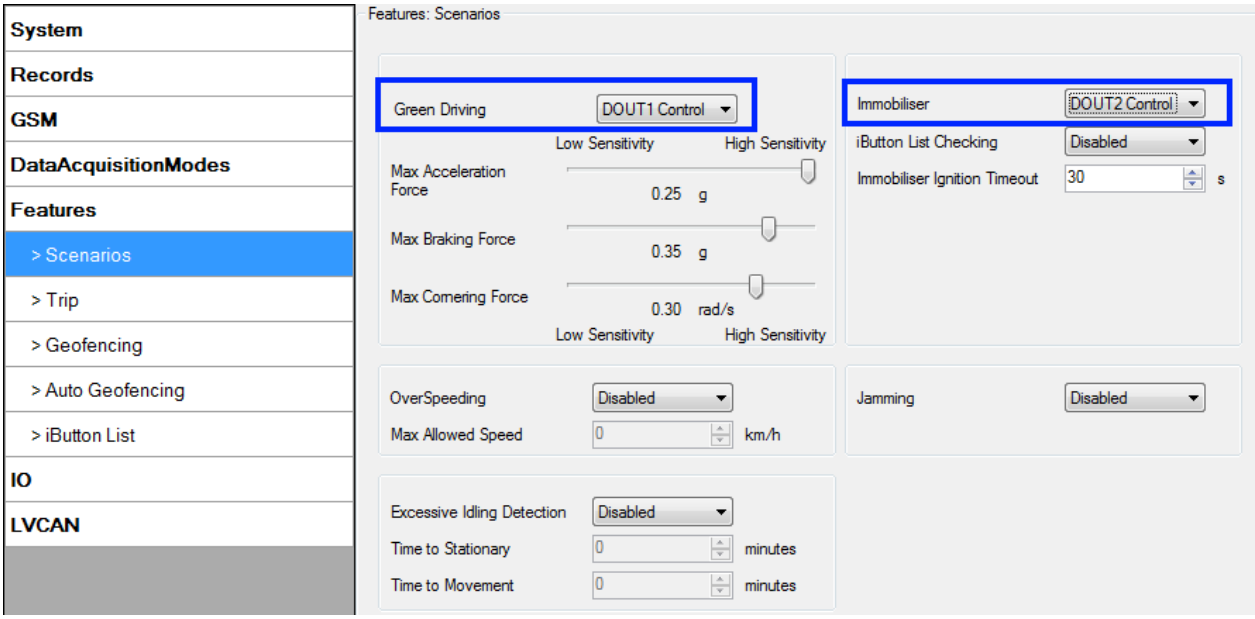

Figure 38. Scenarios SMS event configuration

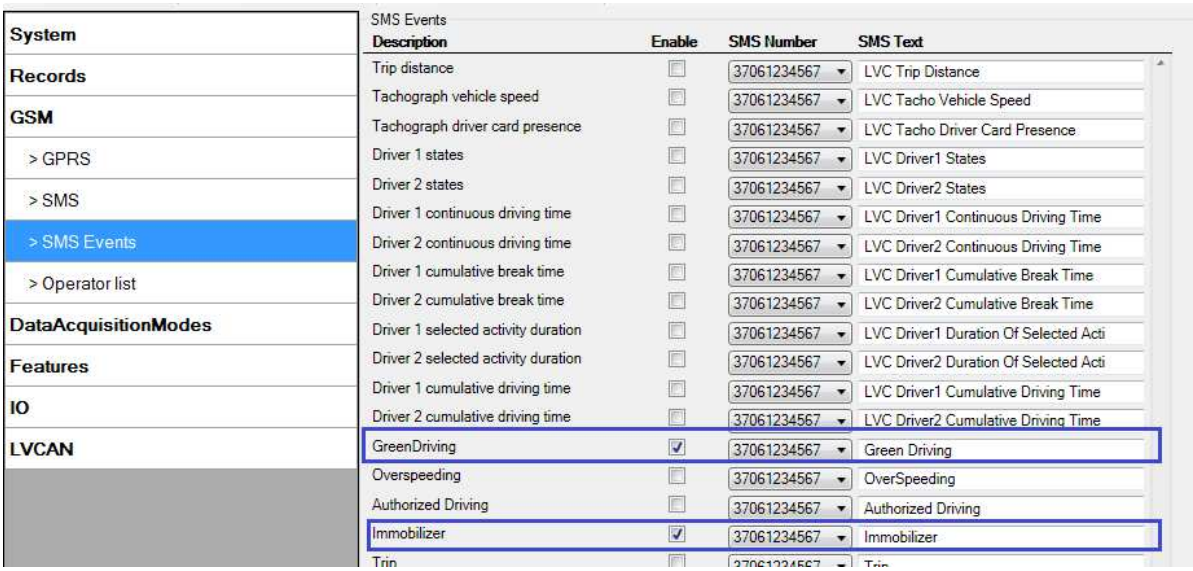

Figure 39. Scenarios SMS event configuration

When any of the scenarios events occurs, a text message will be sent to the predefined number.

Trip

In order to configure Trip SMS events click on Trip window and Enable Trip feature (figure 40). Then go to GSM -> SMS -> SMS Events settings and Enable Trip SMS event. After enabling SMS Events (figure 41), trip event will be triggered and message sent, when Trip starts (GNSS speed exceeds the speed in Start Speed (ex. 5 km/h) and when Trip stops, that is ignition is turned off longer then the time written in Ignition Off Timeout (ex. 60 seconds).

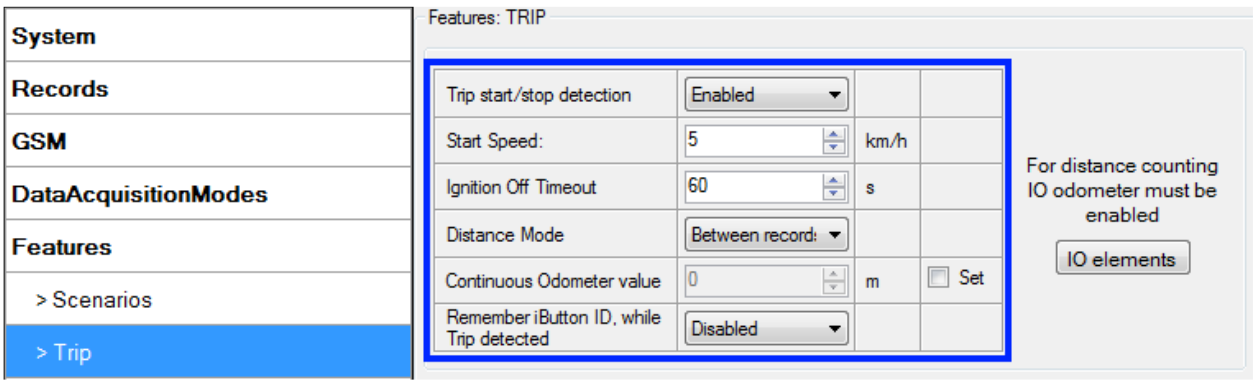

Figure 40. Trip Start/Stop SMS event configuration

Figure 41. Trip Start/Stop SMS event configuration

Geofence

Geofence SMS event is triggered and message sent when the device exits and/or enters a configured Geofence zone. The Geofence zone must be configured to generate an event On Exit, On Enter or On Both (figure 42). If No Event is selected, then it is not possible to turn on SMS events. If several zones are created then SMS events can be turned on separately for each zone entering different text message.

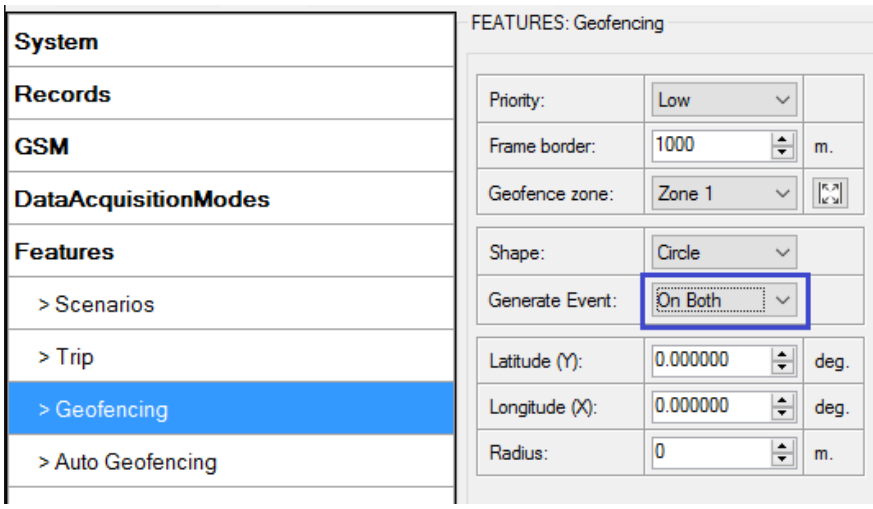

Figure 42. Geofence SMS event configuration

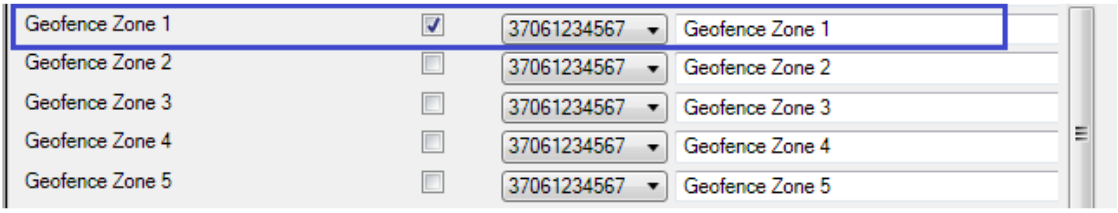

Figure 43. Geofence SMS event configuration

AutoGeofence

SMS events for AutoGeofence are configured the same as in Geofence. AutoGeofence is in Features -> Auto geofencing (figure 44), for SMS events configuration, go to GSM -> SMS -> SMS Events (figure 45).

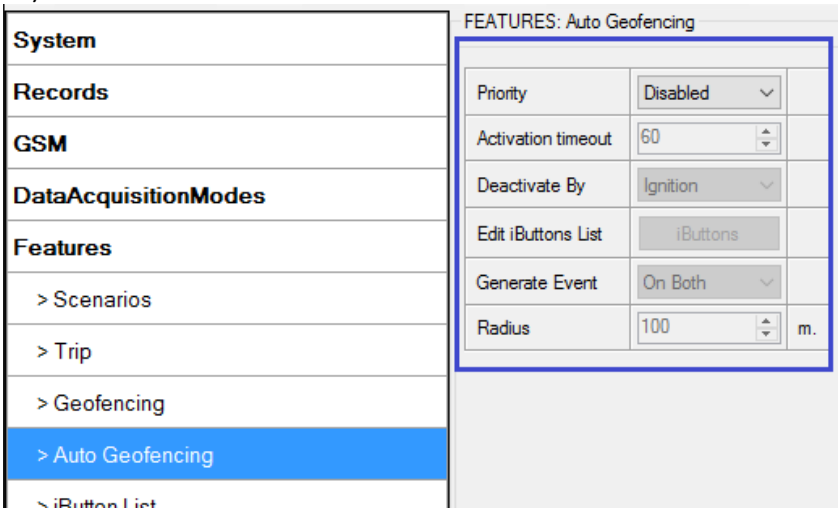

Figure 44. AutoGeofence configuration

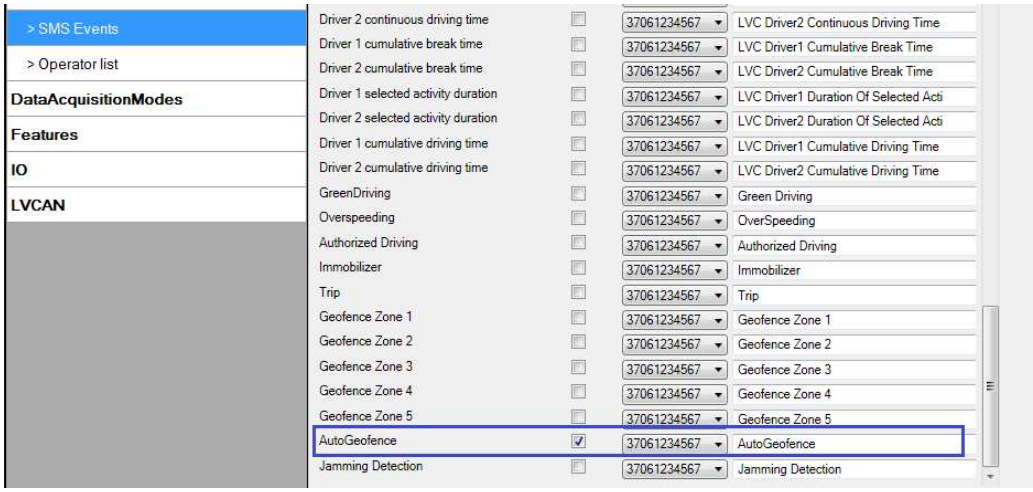

Figure 45. AutoGeofence SMS event configuration

I/O events

FM3612 sends SMS event message when a configured I/O property enters and/or exits its configured High/Low boundaries or Hysteresis event generation is chosen (Monitoring does not generate event, so SMS event could not be configured). Every IO element SMS event can be configured to send individual message to different numbers.

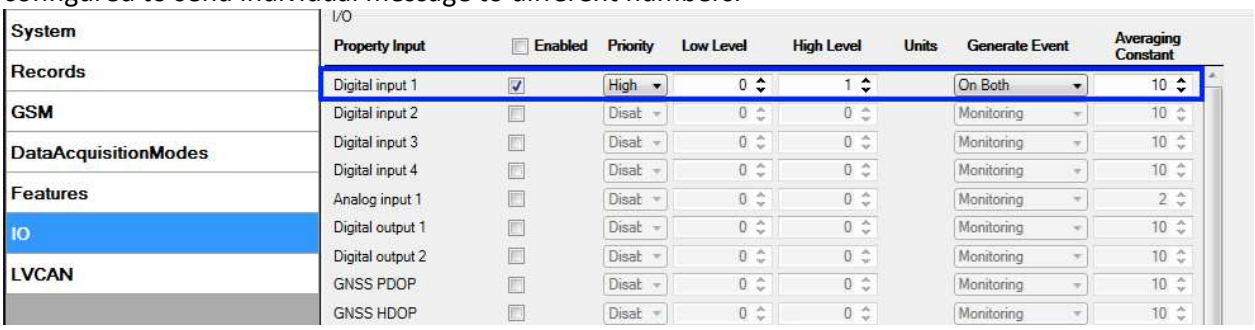

Figure 46. I/O event configuration

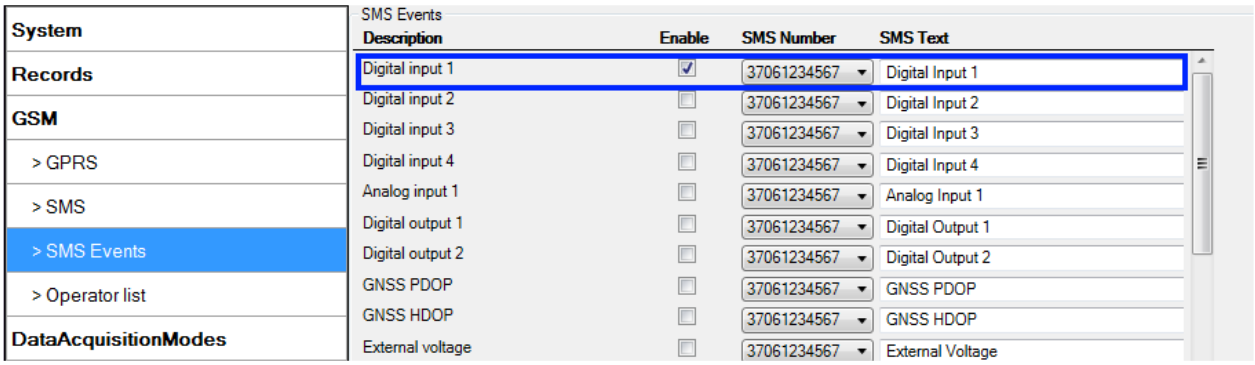

Figure 47. I/O SMS event configuration

5.15 I/O settings

When no I/O element is enabled, AVL packet comes with GNSS information only. After enabling I/O element(s) AVL packet along with GNSS information contains current value(s) of enabled I/O element.

Permanent I/O elements (are always sent to server if enabled)		
Nr.	Property Name	Description
00	Digital Input Status 1	Logic: 0 / 1
01	Digital Input Status 2	Logic: 0 / 1
02	Digital Input Status 3	Logic: 0 / 1
03	Digital Input Status 4	Logic: 0 / 1
04	Analog Input 1	Voltage: mV, 0 – 30 V
05	Digital Output 1	Logic: 0 / 1
06	Digital Output 2	Logic: 0 / 1

07	GNSS PDOP	Probability * 10; 0-500
08	GNSS HDOP	Probability * 10; 0-500
09	External Voltage	Voltage: mV, 0 – 30 V
10	GNSS Power	States: 0 – off state (when GPS module is off) 1 – Reserved 2 – GPS ready (antenna is working, but with no GPS fix) 3 – GPS working (antenna is working and has GPS fix) 4 – GPS sleep (when device is in GPS sleep mode) 5 – Overcurrent (The only condition to get value 5, then antenna is damaged and short circuit)
11	Movement Sensor	0 – not moving, 1 – moving.
12	Odometer Value	Distance between two records: m
13	GSM Operator	Currently used GSM Operator code
14	Speed (Km/h)	Value in km/h, 0 – xxx km/h
15	iButton ID	iButton ID number
16	Mode	0 – home on stop, 1 – home on move, 2 – roaming on stop, 3 – roaming on move, 4 – unknown on stop, 5 – unknown on move
17	GSM Signal	GSM signal level value in scale 1 – 5
18	Deep Sleep	0 – not deep sleep mode, 1 – deep sleep mode
19	Cell ID	GSM base station ID
20	Area Code	Location Area code (LAC), it depends on GSM operator. It provides unique number which assigned to a set of base GSM stations. Max value: 65536
21	Dallas Temperature 1	10 * Degrees (°C), -55 - +115, if 3000 – Dallas error
22	Dallas Temperature 2	10 * Degrees (°C), -55 - +115, if 3000 – Dallas error
23	Dallas Temperature 3	10 * Degrees (°C), -55 - +115, if 3000 – Dallas error
24	Battery Voltage	Voltage: mV
25	Battery Charging Current	Current: mA
26	Ignition	Ignition status indication. Logic: 0 / 1
27	Network Type	0 – 3G network, 1 – 2G network
28	Continuous Odometer	Distance which device has been traveled with ignition ON: m
29	Dallas temperature ID1	1st connected dallas temperature sensor ID
30	Dallas temperature ID2	2nd connected dallas temperature sensor ID
31	Dallas temperature ID3	3rd connected dallas temperature sensor ID

Eventual I/O elements (generate and send record to server only if appropriate conditions are met)		
Nr.	Property Name	Description
26	Geofence zone 01	Event: 0 – target left zone, 1 – target entered zone
27	Geofence zone 02	Event: 0 – target left zone, 1 – target entered zone
28	Geofence zone 03	Event: 0 – target left zone, 1 – target entered zone
29	Geofence zone 04	Event: 0 – target left zone, 1 – target entered zone
30	Geofence zone 05	Event: 0 – target left zone, 1 – target entered zone
31	Auto Geofence	Event: 0 – target left zone, 1 – target entered zone
32	Trip	1 – trip start, 0 – trip stop
33	Immobilizer	1 – iButton connected
34	Authorized driving	1 – authorized iButton connected
35	Green driving type	1 – harsh acceleration, 2 – harsh braking, 3 – harsh cornering
36	Green driving value	Depending on green driving type: if harsh acceleration or braking – g*100 (value 123 -> 1.23g), if harsh cornering – degrees (value in radians)
37	Over Speeding	At over speeding start km/h, at over speeding end km/h
38	LVCAN Speed	Value in km/h, 0 – 250 km/h
39	LVCAN Accelerator pedal position	Value range: 0-100 %
40	LVCAN Total fuel used	Value range: 0- 99999999 liters* “Total Fuel Used” is sent to server multiplied by 10. Example: if value was 150.5 liters, “1505” will be sent to server.
41	LVCAN Fuel level (liters)	Value range: 0-100 liters
42	LVCAN Engine RPM	Value range: 0-8200 rpm
43	LVCAN Vehicle distance	Value range: 0-2145000000 meters
44	LVCAN Fuel level (proc.)	Value range: 0-100 %
45	LVCAN Program number	Value range: 0-999
47	LVC ModuleID	Value range: 0-max
48	LVC Engine Work Time	Value range: 0-4294967295
49	LVC Engine Work Time (counted)	Value range: 0-4294967295
50	LVC Total Mileage (counted)	Value range: 0-4294967295
51	LVC Fuel Consumed (counted)	Value range: 0-4294967295
52	LVC Fuel Rate	Value range: 0-4294967295
53	LVC AdBlue Level (percent)	Value range: 0-4294967295
54	LVC AdBlue Level (liters)	Value range: 0-255
55	LVC Engine Load	Value range: 0-65535
56	LVC Engine Temperature	Value range: 0-65535

57	LVC Axle 1 Load	Value range: 0-255
58	LVC Axle 2 Load	Value range: 0-65535
59	LVC Axle 3 Load	Value range: 0-65535
60	LVC Axle 4 Load	Value range: 0-255
61	LVC Axle 5 Load	Value range: 0-65535
62	LVC Control State Flags	Value range: 0-255
63	LVC Agricultural Machinery Flags	Value range: 0-255
64	LVC Harvesting Time	Value range: 0-65535
65	LVC Area of Harvest	Value range: 0-65535
66	LVC Mowing Efficiency	Value range: 0-65535
67	LVC Grain Mown Volume	Value range: 0-65535
68	LVC Grain Moisture	Value range: 0-65535
69	LVC Harvesting Drum RPM	Value range: 0-4294967295
70	LVC Gap Under Harvesting Drum	Value range: 0-max
71	LVC Security State Flags	Value range: 0-4294967295
72	LVC Tacho Total Vehicle Distance	Value range: 0-4294967295
73	LVC Trip Distance	Value range: 0-4294967295
74	LVC Tacho Vehicle Speed	Value range: 0-4294967295
75	LVC Tacho Driver Card Presence	Value range: 0-65535
76	LVC Driver1 States	Value range: 0-65535
77	LVC Driver2 States	Value range: 0-255
78	LVC Driver1 Continuous Driving Time	Value range: 0-max
79	LVC Driver2 Continuous Driving Time	Value range: 0-4294967295
80	LVC Driver1 Cumulative Break Time	Value range: 0-4294967295
81	LVC Driver2 Cumulative Break Time	Value range: 0-65535
82	LVC Driver1 Duration Of Selected Acti	Value range: 0-255
83	LVC Driver2 Duration Of Selected Acti	Value range: 0-255
84	LVC Driver1 Cumulative Driving Time	Value range: 0-255
85	LVC Driver2 Cumulative Driving Time	Value range: 0-65535
86	LVC Driver1 ID High	Value range: 0-65535

87	LVC Driver1 ID Low	Value range: 0-65535
88	LVC Driver2 ID High	Value range: 0-65535
89	LVC Driver2 ID Low	Value range: 0-65535
90	LVC Battery Temperature	Value range: 0-65535
91	LVC Battery Level (percent)	Value range: 0-65535

There are two types of operations with Permanent I/O elements: simple monitoring and event generating. Monitoring method is used when current I/O information needed with regular GNSS coordinates. Event generating method is used when additional AVL packet is needed when current value of I/O exceeds predefined High and Low levels. I/O settings allow defining I/O event criteria.

Figure 48. I/O settings

Enabled or disabled field – allows enabling I/O element so it is added to the data packet and is sent to the server. By default all I/O element are disabled and FM3612 records only GNSS coordinates.

Priority (AVL packet priority) can be low, high or panic. Regular packets are sent as Low priority records. When low priority event is triggered, FM3612 makes additional record with indication that the reason for that was I/O element change. When High priority is selected, module makes additional record with high priority flag and sends event packet immediately to the server by GPRS. Panic priority triggers same actions as high priority, but if GPRS fails, it sends AVL packet using SMS mode if SMS is **enabled in SMS settings**.

High and Low levels – define I/O value range. If I/O value enters or exits this range, FM3612 generates event. “Generate event” parameter defines when to generate event – when value enters defined range, exits it or both.

Averaging constant – it is an I/O event delay parameter. In some applications there is no need to generate events on every I/O range enter/exit immediately. Sometimes it is necessary to wait some time interval before event generating. Averaging constant allows setting I/O event delay (averaging). If I/O value is entering or leaving predefined range, it must have same value for Averaging constant time. 1 Averaging constant value equals about 30 miliseconds. In Deep Sleep mode there is no Averaging.

Note: I/O element's "Movement sensor" Averaging constant is interpreted as Start Move Timeout in seconds (from 1 to 59).
Start Move Timeout – is a time interval required for movement sensor to be in the moving state, to consider vehicle as moving.

5.15.1 Monitoring

I/O monitoring starts after enabling I/O element and setting up I/O parameters as it is shown below:

Figure 49. I/O settings

5.15.2 Event Generating

Events happen when the value of enabled I/O intersects thresholds (enter, exit or on both) predefined by High and Low level thresholds. Table below defines all available values of I/O settings.

Setting	Value
Priority	low, high
High level	maximum threshold
Low level	minimum threshold
Generate event	on interval enter, on interval exit, on both enter and exit
Average constant	$1 – 2^{32}$ (4 Bytes)

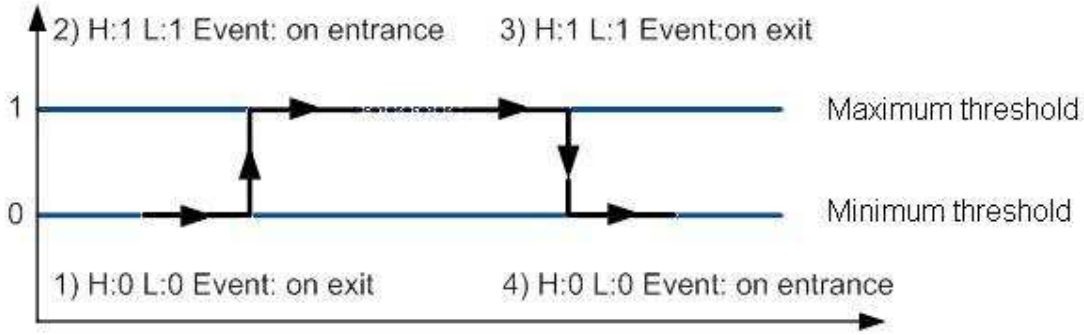

Figure 50. Digital Input event generation example

5.15.3 Hysteresis

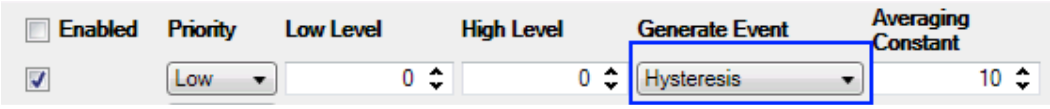

Figure 51. Hysteresis parameter configuration

I/O elements can generate events according to hysteresis algorithm. If I/O event operand "Hysteresis" is selected, events will be generated as it is shown in the illustration below (I/O speed is taken as I/O value example):

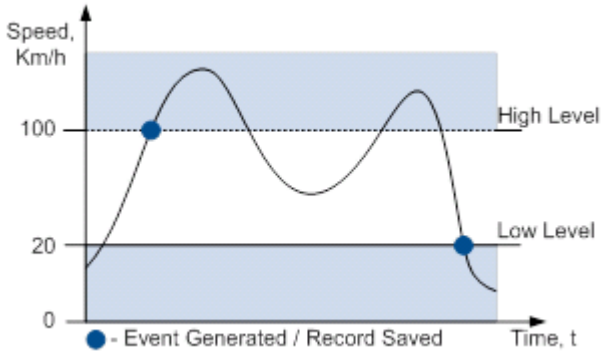

Figure 52. Event generation according hysteresis algorithm

6 SMS COMMAND LIST

Read chapter 5.11 to know how to construct a proper SMS message and send it to FM3612 device. All commands are case sensitive. While FM3612 operates in Deep Sleep mode and user tries to send SMS message it cannot arrive to FM3612 device, because GSM/GPRS module is disabled most of the time (wake up depends on Send Period parameter). FM3612 will receive the SMS when it wakes up (exits deep sleep mode).

6.1 SMS command list

Command	Description	Response
getstatus	Modem Status information	Yes
getweektime	Current device time, Day of Week and amount of minutes passed since start of week	Yes
getops	List of currently available GSM operator	Yes
getcfgtime	Date and Time of last successful configuration	Yes
ggps	Google Map Link information	Yes
getgps	Current GPS data and time	Yes
cpureset	Reset CPU	No
resetprof	Reset all FLASH1 profile configuration to default profile	No
getver	Device / Modem / Code version information	Yes
getinfo	Device runtime system information	Yes
deleterecords	Delete all records saved on FLASH	No
getio	Readout digital inputs and outputs	Yes
readio #	Readout digital input value according entered ID, # - ID value	Yes

setdigout ## Y1 Y2	set digital outputs 0 – OFF, 1 – ON Y1 – timeout for DO1 Y2 – timeout for DO2	Yes
getparam #	Readout parameter value according entered ID. # - ID value.	Yes
setparam # #	Set parameter value according entered ID and Value. 1.# - ID value. 2.# - New Parameter Value	Yes
getparam 1271 X	X values can be 1, 2, 3	Yes
flush #,#,#,#,#,#,#	Initiates all data sending to specified target server 1.# - IMEI 2.# - APN 3.# - LOGIN 4.# - PASS 5.# - IP 6.# - PORT 7.# - MODE (0-TCP/1-UDP)	No
readops #	1 – send first 20 operator codes, 2 – send from 21st to 40th operator codes, 3 – send all other operator codes	
sn #	Static navigation, 1 – enable, 0 – disable	Yes
banlist	Banned operators information	Yes
crashlog	Device last information before unexpected reset	Yes
delete_all_sms	Deletes all SMS	No
lvcangetprog	CAN Program Number request by SMS	Yes
lvcansetprog #	Set LVCAN program number	Yes
lvcangetinfo	Get LV-CAN info by SMS	Yes

6.1.1 getstatus

Response details	Description
Data Link	Indicate module connection to server at the moment: 0 – Not connected, 1 – connected
GPRS	Indicate if GPRS is available at the moment
Phone	Voice Call status: 0 – ready, 1 – unavailable, 2 – unknown, 3 – ringing, 4 – call in progress, 5 – asleep
SIM	SIM Status: 0 – ready, 1 – pin, 2 – puk, 3 – pin2, 4 – puk2
OP	Connected to GSM Operator: numerical id of operator
Signal	GSM Signal Quality [0-5]
NewSMS	Indicate if new message received
Roaming	0 – Home Network, 1 – roaming
SMSFull	SMS storage is full? 0 – ok, 1 – SMS storage full
LAC	GSM Tower Location Area Code
Cell ID	GSM Tower Cell ID Code

Example: Data Link: 0 GPRS: 1 Phone: 0 SIM: 0 OP: 24602 Signal: 5 NewSMS: 0 Roaming: 0 SMSFull: 0 LAC: 1 Cell ID: 864

6.1.2 getweektime

Response details	Description
Clock Sync	Indicates system clock synchronization status. 0 – System is not synchronized, 1 – System synchronized
DOW	Day Of Week – indicates current day of week starting from 1 – Monday, 2 – Tuesday, etc.
Time	Indicates current GMT time
WeekTime	Indicates time in minutes starting from Monday 00:00 GMT

Example: Clock Sync: 1 DOW: 4 Time 12:58 Weektime: 6538

6.1.3 getops

Response details	Description
LIST	Returns list of current available allowed operators.

Example: (2,”LT BITE GSM”,”BITE”,”24602”),(3,”TELE2”,”TELE2”,”24603”)

6.1.4 getcfgtime

Response details	Description
Date/Time	Returns last performed configuration date and time.

Example: Last Configuration was performed on: 2010.4.15 5:45:19

6.1.5 getgps

Response details	Description
Gps	Indicates valid (1) or invalid (0) Gps data
Sat	Count of currently available satellites
Lat	Latitude (Last good Latitude)
Long	Longitude (Last good Longitude)
Alt	Altitude
Speed	Ground speed, km/h
Dir	Ground direction, degrees
Date	Current date
Time	Current GMT time

Example: GPS:1 Sat:7 Lat:54.71473 Long:25.30304 Alt:147 Speed:0 Dir:77 Date: 2007/8/24 Time: 13:4:36

6.1.6 ggps

Response details	Description
D	Date
T	Time
S	Actual Speed
C	Latitude (Last good Latitude), Longitude (Last good Longitude)
Url	Google Maps Link

Example: D:2013/7/4 T:0:0:0 S:0 C:0, 0 Url: http://maps.google.com/?q=0,0&om=1speed:0

6.1.7 getver

Response details	Description
Code Ver	Firmware version
Device IMEI	IMEI
Device ID	Device ID is used to detect by server which type of configuration to load
Bootloader Ver	Bootloader Version
Modem App Ver	Version of modem application (veiks: nuo 00.05.14)
Revision	Firmware revision

Example: Code Ver:01.06.15 Rev:1 Device IMEI:353976010139156 Device ID:000001 Bootloader Ver: 01.09 Modem APP Ver:TM11Q_R_01.00.03.03_002

6.1.8 getinfo

Response details	Description
INI	Device Initialization Time
RTC	RTC Time
RST	Restart Counter
ERR	Error Counter
SR	Number of Sent Records
BR	Number of broken records
CF	Profile CRC Fail counter
FG	Failed GPRS counter
FL	Failed link counter
UT	UPD Timeout counter
SMS	Sent SMS Counter
NOGPS	No GPS Timer
GPS	GPS receiver state. 0 – OFF, 1 – restarting, 2 – ON but no fix, 3 – ON and operational, 4 – sleep mode
SAT	Average satellites
RS	Reset Source Identification 1 – Low Power, 2 – W Watchdog, 3 – I Watchdog, 4 – Software reset, 5 – Power On, 6 – Pin Reset
MD	Data Mode state. 0 – Home and Stop, 1 – Home and Moving, 2 – Roaming and Stop, 3 – Roaming and Moving, 4 – Unknown and Stop, 5 – Unknown and Moving
RF	Records Found – number of records in the memory.

Example: INI:2013/10/11 8:44 RTC:2013/10/11 8:59 RST:1 ERR:0 SR:0 BR:0 CF:0 FG:0 FL:0 UT:0 SMS:1 NOGPS:0:14 GPS:2 SAT:0 RS:3 MD:4 RF:0

6.1.9 getio

Response details	Description
DI#	Digital Input state
AIN#	Analog Input state
DO#	Digital Output state

Example: DI1:0 DI2:0 DI3:0 AIN:0.0611 DO1:0 DO2:0

6.1.10 readio

Response details	Description
ID	I/O element ID
Value	I/O Element value

Example: I/O ID:3 Value:0

6.1.11 setdigout ## Y1 Y2

Sets digital outputs to ON or OFF state (for some time if needed). Value is written as a row for OUT1 and OUT2 values.

Example: 'setdigout 01 0 5' will set OUT2 to high level for 5 seconds, while OUT1 to low level.

To ignore one digital output value and make ON/OFF state only to another digital output in place of 0 or 1 values, "?" must be used.

Example: 'setdigout ?1' will set OUT2 to high level for indefinite period of time while OUT1 remains as it was set before.

6.1.12 getparam

Read parameter value. ID consists of 3 or 4 digits. Detailed list of parameters and IDs can be found in chapter number 8 "Parameter List"

Example: 'getparam 1245' command will request server IP address.

6.1.13 setparam

Sets new value for parameter. ID consists of 3 or 4 digits. Detailed list of parameters and IDs can be found in chapter number 8 "Parameter List"

Example: 'setparam 1245 127.0.0.1' will change configured IP address.

6.1.13. getparam 1271 X/212 X

X values can be 1,2,3.

If X = 1, Operator codes from 0-19 are read from configuration and sent via SMS.
If X = 2, Operator codes from 20-39 are read from configuration and sent via SMS.
If X = 3, Operator codes from 40-49 are read from configuration and sent via SMS.
If X = any other, Operator codes from 0-19 are read from configuration and sent via SMS.

6.1.14. setparam 1271 X/212 X

If X is from 0 to 49, X means index of operator code which has to be configured. Up to 20 operator codes may be configured in 1 SMS. Example: *Setparam 1271 16 24602,24603,24605* ,here 16th, 17th and 18th operator codes are set. Note! Other operator codes are left unchanged in the configuration.

6.1.15 readops

Send from device Operator List.

1 – send first 20 operator codes, 2 – send from 21st to 40th operator codes, 3 – send all other operator codes.

6.1.16 flush #,#,#,#,#,#,#

Initiates all data sending by GPRS to specified target server. Comma separated parameters go as numbered:

1.# - IMEI
2.# - APN
3.# - GPRS LOGIN
4.# - GPRS PASSWORD
5.# - IP
6.# - PORT

7.# - MODE (0-TCP/1-UDP)

Parameters are separated by comma (no spaces needed). In case you don't need to enter parameter (Login/Pass) – do not put space, simply put comma and write next parameter.

Example: opa opa flush 353976012555151,banga,,,212.47.99.62,12050,0

Response details	Description
FLUSH SMS Accepted	FLUSH SMS Accepted
# records found on FLASH	Number of records found on FLASH
Minimum Records to Send: #	Number of minimum saved records to send
GPRS Enabled: #	State of the GPRS connection, 0 – disabled; 1 – enabled
Time Sync: #	Indicates time synchronization on the device, 0 – not synchronized; 1 – synchronized

Example: FLUSH SMS Accepted. 11 records found on FLASH. Minimum Records to Send: 1. GPRS Enabled: 1. Time Sync: 1.

6.1.17 sn

Enables or disables Static navigation. 1 – enable, 0 – disable.

6.1.18 banlist

Gives a list of all banned operators.

Example when no operators are banned: 0000.00s.0.000

6.1.19 crashlog

Gives the last information before the device has crashed for unexpected reasons. It is useful when the device acts unexpectedly or restars for unexplained reasons.

Example if no unexpected reset: "Crash: "

Example if unexpected reset was detected: "Crash: 3051,3052,3053".

6.1.20 lvcangetprog

CAN program number can be obtained via SMS:

SMS Text: "lvcangetprog"

Response: "CAN Program Nr: XXXX"

6.1.21 lvcansetprog

Set LV-CAN program number via SMS:

SMS Text: "lvcansetprog 139"

Response: "CAN program Nr:139"

6.1.22 lvcangetinfo

Get LV-CAN info by SMS

Full LV-CAN information via SMS:

SMS Text: " lvcangetinfo"

Response: "

Prog: 139

SWRevison: 6
KernVer: 10
KernVar: 49
MdlID: 8884443332221110”

7 Debug mode

FM3612 is able to transmit its current state when connected to PC using USB cable. It is used to detect errors and provide information to possible solutions when operating as unexpected. Download Terminal from:
http://avl1.teltonika.lt/Downloads/Software/Terminal.zip.

After launching terminal choose baud rate 115200 and hardware control – none. Select COM port which is assigned to “Virtual COM Port”. Click on ‘Start Log’ button and save a new file. Then click ‘Connect’ to start receiving messages from FM3612.

Also you can log NMEA data directly. To get NMEA data, simply enter the following command into the command field: **.log_nmea:1$0a**.

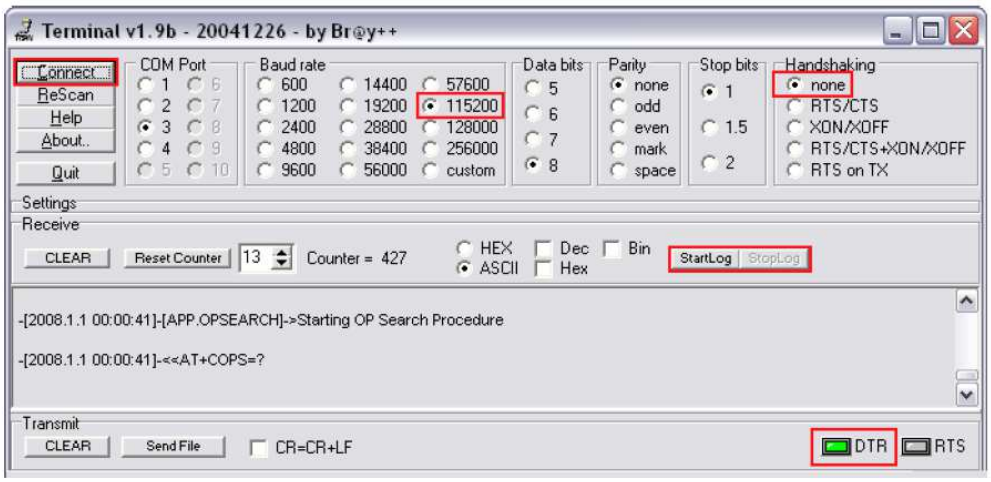

Figure 53. Terminal window for logging

8 Parameter List

8.1 Parameters value types

S8 – Signed Char
S8[*n*] – String of *n* Char
U8 – Unsigned Char
U16 – Unsigned Short
S32 – Signed Integer
U32 – Unsigned Integer
U64 – Unsigned Long Long Integer

8.2 System parameters

8.2.1 Sleep Mode (ID=1000)

Device has two sleep modes: sleep and deep sleep mode. While sleep is disabled (value 0) module will never enter sleep mode, in sleep mode (value 1) module reduces level of power usage by turning GNSS module to sleep, in deep sleep mode (value 2) module turns GNSS module to sleep and switch GSM module off (note, that FM3612 do not receive SMS while in deep sleep).

Minimum value	Maximum value	Recommended value	Goes with (depends on) parameters	Value type
0	2	-		U8

8.2.2 Sleep timeout (ID=200)

Sleep timeout is time after which FM3612 goes to sleep or deep sleep if other requirements are met. It is measured in minutes.

Minimum value	Maximum value	Recommended value	Goes with (depends on) parameters	Value type
1	3000	-		U8

8.2.3 Analog Input value range (ID=1001)

Analog input measuring resolution and range can be defined as 0…10V (value 0) or 1…30V (value 1).

Minimum value	Maximum value	Recommended value	Goes with (depends on) parameters	Value type
0	1	-		U8

8.2.4 Stop Detection Source (ID=1002)

Device can operate and change its working mode according to motion detection source: ignition (value 0), movement sensor (value 1), GPS (value 2).

Minimum value	Maximum value	Recommended value	Goes with (depends on) parameters	Value type
0	2	-		U8

8.2.5 Static Navigation (ID=1003)

When static navigation is enabled, FM3612 filters out GPS jumps, when it is not moving. When it is disabled, it does not make any changes to collected GPS data.

Minimum value	Maximum value	Recommended value	Goes with (depends on) parameters	Value type
0	1	1		U8

8.2.6 Ignition Source (ID=1004)

Ignition Source sets ignition triggered functionalities.

Parameter	ID	Value
Ignition Source	1004	0 (By Power Voltage – default)
		1 (By Ignition Din1)
		2 (By Movement sensor)
High Voltage Level*	1005	Min: 0, Max: 30000 (mV)
Low Voltage Level*	1006	Min: 0, Max: 30000 (mV)

* - used when External voltage selected as ignition source.

8.2.7 Ignition Detection(ID=1008)

This parameter defines ignition detection.

Manual – ignition detection is by parameters set by user(13-30V)

Automatic – ignition is detected by device:

Power voltage(12V) – ignition on 13.2 - 30

Power voltage (24V) – ignition on 27 – 30

Parameter	ID	Value
Ignition Source	1008	0 - Manual
		1 - Automatic

8.2.8 Ignition Detection Timeout(ID=1009)

This parameter defines time, in which Power Voltage can be lower than set value.

For example, Power Voltage drops from 14V to 12V for 5 seconds(timeout is set to 10) device will not detect “ignition off” state.

Minimum value	Maximum value	Recommended value	Goes with (depends on) parameters	Value type
0	65535	10		U8

8.2.9 GNSS FIX Timeout for Time Synchronization via NTP (ID=1007)

If “GNSS FIX Timeout” is set too 60s (default value) and during this time GPS FIX is received – use default (GNSS) time synchronization method. However if the GPS time FIX is not received: a. FM is going to get time using NTP server. Device will activate GPRS context and create UDP connection to destination port 123 using SNTP protocol.

Minimum value	Maximum value	Recommended value	Goes with (depends on) parameters	Value type
0	65535	60		U8

8.2.10 Saving/Sending without time synchronization (ID=201)

When this feature is enabled (value = 1), then records can be saved and sent to server without time synchronization.

Minimum value	Maximum value	Recommended value	Goes with (depends on) parameters	Value type
0	1	1		U8

8.2.11 GNSS System (ID=202)

This parameter sets Satellite System, available values: 0 – GNSS (all available); 1 – GPS only; 2 – GLONASS only.

Minimum value	Maximum value	Recommended value	Goes with (depends on) parameters	Value type
0	2	0		U8

8.3 Records parameters

8.3.1 Sorting (ID=1010)

Record sorting parameter is responsible for record sorting order. Value of 0 arranging data starting from newest, while value of 1 arranging data starting from oldest.

Minimum value	Maximum value	Recommended value	Goes with (depends on) parameters	Value type
0	1	-		U8

8.3.2 Active Data Link Timeout (ID=1011)

Defines for how many seconds device will keep connection to the server after successful data transfer while waiting for a new record.

Minimum value	Maximum value	Recommended value	Goes with (depends on) parameters	Value type
0	259200	-		U32

8.3.3 Server Response Timeout (ID=1012)

Defines time period (in seconds) for server response to sent records.

Minimum value	Maximum value	Recommended value	Goes with (depends on) parameters	Value type
1	300	-		U8

ATTENTION! Some GSM operators may disconnect the device from an active data link if the device doesn't send any data for a very long time, even if active data link timeout is set to maximum value. The amount of time that an operator keeps the link open depends solely on the operator. For example, if active data link timeout is set to maximum, 259200 seconds (72 hours), and the

device sends data to server every 86400 seconds (24 hours), the operator might disconnect the link earlier and the device will have to connect to the server anew. This may cost extra, depending on the operator GPRS data charge. It is strongly recommended, when using active data link timeout, that data sending to the server should not be very rare (24 hours or more). If data sending is more frequent, then the operator will not disconnect the device form the server.

8.4 GSM parameters

8.4.1 GPRS content activation (ID=1240)

Parameter allows or does not allow GPRS usage. If GPRS is not allowed value is 0, if GPRS is allowed value is 1.

Minimum value	Maximum value	Recommended value	Goes with (depends on) parameters	Value type
0	1	-	**APN Name (ID=1242)** **APN username (ID=1243)** **APN Password (ID=1244)**	S8

8.4.2 APN Name (ID=1242)

Parameter defines GPRS Access Point Name.

Minimum value	Maximum value	Recommended value	Goes with (depends on) parameters	Value type
Empty	32 char string	-	**GPRS content activation (ID=1240)** **APN username (ID=1243)** **APN Password (ID=1244)**	S8[32]

8.4.3 APN username (ID=1243)

Parameter defines APN username. In case operator does not use username for login, value should be empty.

Minimum value	Maximum value	Recommended value	Goes with (depends on) parameters	Value type
Empty	30 char string	-	**GPRS content activation (ID=1240)** **APN Name (ID=1242)** **APN Password (ID=1244)**	S8[30]

8.4.4 APN Password (ID=1244)

Parameter defines APN password. In case operator does not use password for login, value should be empty.

Minimum value	Maximum value	Recommended value	Goes with (depends on) parameters	Value type
Empty	30 char string	-	**GPRS content activation (ID=1240)** **APN Name (ID=1242)** **APN username (ID=1243)**	S8[30]

8.4.5 Domain (ID=1245)

Parameter defines AVL data destination server IP address. Example: 212.47.99.62

Minimum value	Maximum value	Recommended value	Goes with (depends on) parameters	Value type
0	31 char string	-	**GPRS content activation (ID=1240)** **Target Server Port (ID=1246)**	S8[16]

8.4.6 Target Server Port (ID=1246)

Parameter defines AVL data destination server port number. Example: 12050

Minimum value	Maximum value	Recommended value	Goes with (depends on) parameters	Value type
Empty	65535	-	**GPRS content activation (ID=1240)** **Domain (ID=1245)**	U16

8.4.7 Protocol (ID=1247)

Parameter defines GPRS data transport protocol. Module can use TCP or UDP transport protocol to send data to server. For TCP protocol value is 0, for UDP protocol value is 1.

Minimum value	Maximum value	Recommended value	Goes with (depends on) parameters	Value type
0	1	-	**GPRS content activation (ID=1240)**	U8

8.4.8 Use 2G only (ID=1248)

User can choose if device will work only in GSM network, or it will prefer 3G network and switch to GSM only then 3G is absent. To work only with 2G network value is 1, to work with both networks value is 0.

Minimum value	Maximum value	Recommended value	Goes with (depends on) parameters	Value type
0	1	0	**GPRS content activation (ID=1240)**	U8

8.4.9 SMS Login (ID=1252)

User login is used to ensure module security. Used in every SMS that is sent to device. Example: ba321

Minimum value	Maximum value	Recommended value	Goes with (depends on) parameters	Value type
Empty	5 char	-	**SMS Password (ID=1253)**	S8[5]

8.4.10 SMS Password (ID=1253)

User password is used to ensure module security. Used in every SMS that is sent to device. Example: ab123

Minimum value	Maximum value	Recommended value	Goes with (depends on) parameters	Value type
Empty	5 char	-		S8[5]

8.4.11 SMS Time Zone (ID=1254)

Parameter allows to choose from all UTC Time lines for SMS data sending. This parameter unit is minutes and value increment/decrement step is 15 min. (0, 15, 30…).

Minimum value	Maximum value	Recommended value	Goes with (depends on) parameters	Value type
-720	+840	0	**SMS Data send week time** schedule (ID=1273)	U8

8.4.12 SMS data sending settings (ID=1250)

Parameter allows or does not allow sending AVL data using binary SMS. If SMS use is not allowed value is 0 and 1 if SMS use is allowed.

Minimum value	Maximum value	Recommended value	Goes with (depends on) parameters	Value type
0	1	-	**SMS Data send week time schedule (ID=1273)**	S8

8.4.13 SMS Data send week time schedule (ID=1273)

Parameter defines SMS data sending according to week time schedule. This parameter is used to set data sending on selected week days and hours. Minimum time step is 10 minutes.

Example value: 7F,FF,FF,FF,FF,FF,FF,FF,FF,FF,FF,FF,FF,FF,FF,FF,FF,FF,FF,FF

For more information *read 8.5.1.4 "Schedule parameter format".*

8.4.14 Authorized phone numbers (ID=1260-1269)

If at least one number is entered then only those number can send messages to device. Number must be entered without "+" or "00".

Example: 37060012346

Minimum value	Maximum value	Recommended value	Goes with (depends on) parameters	Value type
1 digit	16 digits	-		S8[17]

If SMS data sending is enabled (ID=1250) first value in a list is server GSM number. The SMS with 24 coordinates is sent to this number.

Deleting Authorized phone numbers: do no write any value is configuration SMS command.

Example: setparam 1260

8.4.15 SMS Event PreDefined Numbers (ID=5000-5009)

In this field are written GSM numbers, to which will be sent "Event SMS" text message. Number must be entered without "+" or "00".

Example: 37060012346

Minimum value	Maximum value	Recommended value	Goes with (depends on) parameters	Value type
1 digit	16 digits	-		S8[17]

8.4.16 Operator List (ID=1271 X)

Parameter defines operator list. According to this list module selects operating profile. GSM operator codes are comma separated. First in a list is *Home Operator Code*, then Preferred Roaming Operator Codes are written.

X defines starting position that is changed: If X is from 0 to 49, X means index of operator code which has to be configured. Up to 20 operator codes may be configured in 1 SMS. Example: *setparam 1271 16 24602,24603,24605*

Here 16th, 17th and 18th operator codes are set. Note! Other operator codes are left unchanged in the configuration.

Minimum value	Maximum value	Recommended value	Goes with (depends on) parameters	Value type
Empty	7 digits	-		U32

8.5 Data Acquisition Modes parameters

8.5.1 Home Network GSM operator code "Vehicle on STOP" parameters

8.5.1.1 Min Period (ID=1540)

This parameter indicates time interval in seconds in order to acquire new record. If value is 0 it means no records by min period will be saved.

Minimum value	Maximum value	Recommended value	Goes with (depends on) parameters	Value type
0	2592000	-		U32

8.5.1.2 Min Saved Records (ID=1543)

This parameter defines minimum number of records in one data packet that can be sent to server. It has higher priority than Data Send Period (ID=1544).

Minimum value	Maximum value	Recommended value	Goes with (depends on) parameters	Value type
1	255	1	**GPRS Week Time (ID=1545)**	U8

8.5.1.3 Send Period (ID=1544)

This parameter indicates frequency (time interval in seconds) of sending data to server.

Minimum value	Maximum value	Recommended value	Goes with (depends on) parameters	Value type
0	2592000	-	**Min Saved Records (ID=1543)** **GPRS Week Time (ID=1545)**	U32

8.5.1.4 GPRS Week Time (ID=1545)

This parameter manages when it is allowed to open GPRS context. When module starts it is prohibited to open the context. When modem's GPRS context is closing (for example changing network) it is allowed to open it only at a defined time. It is possible to allow connections every 10 minutes up to once per day.

Example value: 7F,FF,FF,FF,FF,FF,FF,FF,FF,FF,FF,FF,FF,FF,FF,FF,FF,FF,FF,FF

Schedule parameter format:

Time is defined as 19 byte array ('getparam' 1545 returns 20 bytes). First byte of array defines week days; the rest 18 bytes define timestamps with 10 minute interval. In first byte, first bit (LSB) defines if module should connect to GPRS (send SMS) on Monday, second bit – on Tuesday and so on up to seventh bit – which means Sunday. Eighth bit (MSB) is not used. If bits value is 0 then device is not allowed to open GPRS context, but if it is already open – does not close it. If value is 1 it will work as day minutes are defined in rest of the bytes. Day's minutes are

defined by 18 bytes (144 bits). Every n^{th} bit (beginning from the first bit (LSB) and ending 18 bytes 8th bit (MSB)) indicates every 10th minute of the day (day has 1440 minutes).

Sample: GPRS will be allowed on Monday to Friday at 8:00 and 16:00 GMT. The following value should be configured:

00011111 00000000 00000000 00000000 000000000 00000000 00000000 00000001 00000000 00000000 00000000 00000000 00000000 000000001 00000000 00000000 00000000 00000000 00000000

Red bits indicate that GPRS will be allowed every day except Saturdays and Sundays. Blue bits indicate 480 and 720 minutes (480min = 8h and 720min = 16h). So the parameter value should be: 1F,00,00,00,00,00,00,01,00,00,00,00,00,01,00,00,00,00,00

It should be sent as UTF8 encoded string.

8.5.2 Home Network GSM operator code "Vehicle MOVING" parameters

8.5.2.1 Min Period (ID=1550)

This parameter indicates time interval in seconds in order to acquire new record. If value is 0 it means no records by min period will be saved.

Minimum value	Maximum value	Recommended value	Goes with (depends on) parameters	Value type
0	2592000	-	**Min Distance (ID=1551)** **Min Angle (ID=1552)** **Min Speed (ID=1556)** **GPRS Week Time (ID=1555)**	U32

8.5.2.2 Min Distance (ID=1551)

This parameter indicates distance in meters in order to acquire new record. Record is stored when the distance between previous records is greater than parameters value. If value is 0 it means no records by min distance will be saved.

Minimum value	Maximum value	Recommended value	Goes with (depends on) parameters	Value type
0	65535	-	**Min Period (ID=1550)** **Min Angle (ID=1552)** **Min Speed (ID=1556)** **GPRS Week Time (ID=1555)**	U32

8.5.2.3 Min Angle (ID=1552)

This parameter indicates angle in degrees in order to acquire new record. If angle difference between last recorded coordinate and current position is greater than defined value, new record is stored. This parameter is operational, when speed is higher than 10km/h. If value is 0 it means no records by min angle will be saved.

Minimum value	Maximum value	Recommended value	Goes with (depends on) parameters	Value type
0	180	-	**Min Period (ID=1550)** **Min Distance (ID=1551)** **Min Speed (ID=1556)** **GPRS Week Time (ID=1555)**	U16

8.5.2.4 Min Speed (ID=1556)

This parameter indicaes speed difference in order to acquire new record. If speed difference between last recorded coordinate and current position is greater than defined value, new record is stored. If value is 0 it means no records by min distance will be saved.

Minimum value	Maximum value	Recommended value	Goes with (depends on) parameters	Value type
0	255	10	**Min Period (ID=1550)** **Min Distance (ID=1551)** **Min Angle (ID=1552)** **Min Speed Source (ID=1557)** **GPRS Week Time (ID=1555)**	U16

8.5.2.5 Min Speed Source (ID=1557)

This parameter defines Source for speed difference calculation: 0 – GPS, 1 – LVCAN

Minimum value	Maximum value	Recommended value	Goes with (depends on) parameters	Value type
0	1	0	**Min Period (ID=1550)** **Min Distance (ID=1551)** **Min Angle (ID=1552)** **Min Speed (ID=1556)** **GPRS Week Time (ID=1555)**	U8

8.5.2.6 Min Saved Records (ID=1553)

This parameter defines minimum number of records in one data packet that can be sent to server. It has higher priority than Data Send Period (ID=1554).

Minimum value	Maximum value	Recommended value	Goes with (depends on) parameters	Value type
1	255	1	**Min Period (ID=1550)** **Min Distance (ID=1551)** **Min Angle (ID=1552)** **Min Speed (ID=1556)** **GPRS Week Time (ID=1555)**	U8

8.5.2.7 Send Period (ID=1554)

This parameter indicates frequency (time interval in seconds) of sending data to server.

Minimum value	Maximum value	Recommended value	Goes with (depends on) parameters	Value type
0	2592000	-	**GPRS Week Time (ID=1555)**	U32

8.5.2.8 GPRS Week Time (ID=1555)

Read 8.5.1.4.

8.5.3 Roaming Network GSM operator code "Vehicle on STOP" parameters

8.5.3.1 Min Period (ID=1560)

This parameter indicates time interval in seconds in order to acquire new record. If value is 0 it means no records by min period will be saved.

Minimum value	Maximum value	Recommended value	Goes with (depends on) parameters	Value type

0	2592000	-		U32

8.5.3.2 Min Saved Records (ID=1563)

This parameter defines minimum number of records in one data packet that can be sent to server. It has higher priority than Data Send Period (ID=1564).

Minimum value	Maximum value	Recommended value	Goes with (depends on) parameters	Value type
1	255	1	**GPRS Week Time (ID=1565)**	U8

8.5.3.3 Send Period (ID=1564)

This parameter indicates frequency (time interval in seconds) of sending data to server.

Minimum value	Maximum value	Recommended value	Goes with (depends on) parameters	Value type
0	2592000	-	**Min Saved Records (ID=1563)** **GPRS Week Time (ID=1565)**	U32

8.5.3.4 GPRS Week Time (ID=1565)

Read chapter 8.5.1.4.

8.5.4 Roaming Network GSM operator code "Vehicle MOVING" parameters

8.5.4.1 Min Period (ID=1570)

This parameter indicates time interval in seconds in order to acquire new record. If value is 0 it means no records by min period will be saved.

Minimum value	Maximum value	Recommended value	Goes with (depends on) parameters	Value type
0	2592000	-	**Min Distance (ID=1571)** **Min Angle (ID=1572)** **Min Speed (ID=1576)** **GPRS Week Time (ID=1575)**	U32

8.5.4.2 Min Distance (ID=1571)

This parameter indicates distance in meters in order to acquire new record. Record is stored when the distance between previous records is greater than parameter's value. If value is 0 it means no records by min distance will be saved.

Minimum value	Maximum value	Recommended value	Goes with (depends on) parameters	Value type
0	65535	-	**Min Period (ID=1570)** **Min Angle (ID=1572)** **Min Speed (ID=1576)** **GPRS Week Time (ID=1575)**	U32

8.5.4.3 Min Angle (ID=1572)

This parameter indicates angle in degrees in order to acquire new record. If angle difference between last recorded coordinate and current position is greater than defined value, new record is stored. This parameter is operational, when speed is higher than 10km/h. If value is 0 it means no records by min angle will be saved.

Minimum value	Maximum value	Recommended value	Goes with (depends on) parameters	Value type
0	180	-	**Min Period (ID=1570)** **Min Angle (ID=1572)** **Min Speed (ID=1576)** **GPRS Week Time (ID=1575)**	U16

8.5.4.4 Min Speed (ID=1576)

This parameter indicates speed difference in order to acquire new record. If speed difference between last recorded coordinate and current position is greater than defined value, new record is stored. If value is 0 it means no records by min distance will be saved.

Minimum value	Maximum value	Recommended value	Goes with (depends on) parameters	Value type
0	255	10	**Min Period (ID=1570)** **Min Distance (ID=1571)** **Min Angle (ID=1572)** **Min Speed Source (ID=1577)** **GPRS Week Time (ID=1575)**	U16

8.5.4.5 Min Speed Source (ID=1577)

This parameter defines Source for speed difference calculation: 0 – GPS, 1 – LVCAN

Minimum value	Maximum value	Recommended value	Goes with (depends on) parameters	Value type
0	1	0	**Min Period (ID=1570)** **Min Distance (ID=1571)** **Min Angle (ID=1572)** **Min Speed (ID=1576)** **GPRS Week Time (ID=1575)**	U8

8.5.4.6 Min Saved Records (ID=1573)

This parameter defines minimum number of records in one data packet that can be sent to server. It has higher priority than Data Send Period (ID=1574).

Minimum value	Maximum value	Recommended value	Goes with (depends on) parameters	Value type
1	255	1	**Min Period (ID=1570)** **Min Distance (ID=1571)** **Min Angle (ID=1572)** **Min Speed (ID=1576)** **GPRS Week Time (ID=1575)**	U8

8.5.4.7 Send Period (ID=1574)

This parameter indicates frequency (time interval in seconds) of sending data to server.

Minimum value	Maximum value	Recommended value	Goes with (depends on) parameters	Value type
0	2592000	-	**Min Saved Records (ID=1573)**	U32

			GPRS Week Time (ID=1575)	

8.5.4.8 GPRS Week Time (ID=1575)

Read chapter 8.5.1.4.

8.5.5 Unknown Network GSM operator code "Vehicle on STOP" parameters

8.5.5.1 Min Period (ID=1580)

This parameter indicates time interval in seconds in order to acquire new record. If value is 0 it means no records by min period will be saved.

Minimum value	Maximum value	Recommended value	Goes with (depends on) parameters	Value type
0	2592000	-		U32

8.5.5.2 Min Saved Records (ID=1583)

This parameter defines minimum number of records in one data packet that can be sent to server. It has higher priority than Data Send Period (ID=1584).

Minimum value	Maximum value	Recommended value	Goes with (depends on) parameters	Value type
1	255	1	**GPRS Week Time (ID=1585)**	U8

8.5.5.3 Send Period (ID=1584)

This parameter indicates frequency (time interval in seconds) of sending data to server.

Minimum value	Maximum value	Recommended value	Goes with (depends on) parameters	Value type
0	2592000	-	**Min Saved Records (ID=1583)** **GPRS Week Time (ID=1585)**	U32

8.5.5.4 GPRS Week Time (ID=1585)

Read chapter 8.5.1.4.

8.5.6 Unknown Network GSM operator code "Vehicle MOVING" parameters

8.5.6.1 Min Period (ID=1590)

This parameter indicates time interval in seconds in order to acquire new record. If value is 0 it means no records by min period will be saved.

Minimum value	Maximum value	Recommended value	Goes with (depends on) parameters	Value type
0	2592000	-	**Min Distance (ID=1591)** **Min Angle (ID=1592)** **Min Speed (ID=1596)** **Min Speed Source (ID=1597)** **GPRS Week Time (ID=1595)**	U32

8.5.6.2 Min Distance (ID=1591)

This parameter indicates distance in meters in order to acquire new record. Record is stored when the distance between previous records is greater than parameter's value. If value is 0 it means no records by min distance will be saved.

Minimum value	Maximum value	Recommended value	Goes with (depends on) parameters	Value type
0	65535	-	**Min Period (ID=1590)** **Min Angle (ID=1592)** **Min Speed (ID=1596)** **GPRS Week Time (ID=1595)**	U32

8.5.6.3 Min Angle (ID=1592)

This parameter indicates angle in degrees in order to acquire new record. If angle difference between last recorded coordinate and current position is greater than defined value, new record is stored. This parameter is operational, when speed is higher than 10km/h. If value is 0 it means no records by min angle will be saved.

Minimum value	Maximum value	Recommended value	Goes with (depends on) parameters	Value type
0	180	-	**Min Period (ID=1590)** **Min Distance (ID=1591)** **Min Speed (ID=1596)** **GPRS Week Time (ID=1595)**	U16

8.5.6.4 Min Speed (ID=1596)

This parameter indicaes speed difference in order to acquire new record. If speed difference between last recorded coordinate and current position is greater than defined value, new record is stored. If value is 0 it means no records by min distance will be saved.

Minimum value	Maximum value	Recommended value	Goes with (depends on) parameters	Value type
0	255	1	**Min Period (ID=1590)** **Min Distance (ID=1591)** **Min Angle (ID=1592)** **Min Speed Source (ID=1597)** **GPRS Week Time (ID=1595)**	U16

8.5.6.5 Min Speed Source (ID=1597)

This parameter defines Source for speed difference calculation: 0 – GPS, 1 – LVCAN

Minimum value	Maximum value	Recommended value	Goes with (depends on) parameters	Value type
0	1	0	**Min Period (ID=1590)** **Min Distance (ID=1591)** **Min Angle (ID=1592)** **Min Speed (ID=1596)** **GPRS Week Time (ID=1595)**	U8

8.5.6.6 Min Saved Records (ID=1593)

This parameter defines minimum number of records in one data packet that can be sent to server. It has higher priority than Data Send Period (ID=1594).

Minimum value	Maximum value	Recommended value	Goes with (depends on) parameters	Value type

1	255	1	**Min Period (ID=1590)** **Min Distance (ID=1591)** **Min Angle (ID=1592)** **Min Speed (ID=1596)** **GPRS Week Time (ID=1595)**	U8

8.5.6.7 Send Period (ID=1594)

This parameter indicates frequency (time interval in seconds) of sending data to server. In order to send data to server GPRS parameters must be enabled

Minimum value	Maximum value	Recommended value	Goes with (depends on) parameters	Value type
0	2592000	-	**Min Saved Records (ID=1593)** **GPRS Week Time (ID=1595)**	U32

8.5.6.8 GPRS Week Time (ID=1595)

Read chapter 8.5.1.4.

8.6 Features Parameters

8.6.1 Green Driving scenario (ID=1600)

Green driving scenario can be enabled to work with 3 different ways: Dout not control scenario (value 1), Dout1 controls scenario (value 2), Dout2 controls scenario (value 3). To disable green driving scenario value 0 is used.

Minimum value	Maximum value	Default value	Goes with (depends on) parameters	Value type
0	3	0		U8

8.6.2 Max Acceleration Force (ID=1602)

It is max allowed acceleration force which can be reached while accelerating without triggering harsh acceleration event.

Minimum value	Maximum value	Recommended value	Goes with (depends on) parameters	Value type
0.25	0.85	0.25	**Green Driving scenario (ID=1600)**	Float

8.6.3 Max Braking Force (ID=1603)

It is max allowed braking force which can be reached while braking without triggering harsh braking event.

Minimum value	Maximum value	Recommended value	Goes with (depends on) parameters	Value type
0.25	0.85	0.35	**Green Driving scenario (ID=1600)**	Float

8.6.4 Max Cornering Force (ID=1604)

It is max allowed cornering angle which can be reached while cornering without triggering harsh cornering event.

Minimum value	Maximum value	Recommended value	Goes with (depends on) parameters	Value type

0.1	1.0	-	**Green Driving scenario (ID=1600)**	U16

8.6.5 Max allowed Speed (ID=1605)

It is max allowed speed which can be reached. If this value exceeded Over speeding event will occur.

Minimum value	Maximum value	Recommended value	Goes with (depends on) parameters	Value type
0	260	-	**Green Driving scenario (ID=1600)**	U16

8.6.6 OverSpeeding scenario (ID=1601)

OverSpeeding scenario can be enabled to work with 3 different ways: Dout not control scenario (value 1), Dout1 controls scenario (value 2), Dout2 controls scenario (value 3). To disable OverSpeeding scenario value 0 is used.

Minimum value	Maximum value	Default value	Goes with (depends on) parameters	Value type
0	3	0		U8

8.6.7 Jamming detection scenario (ID=1606)

Jamming detection scenario can be enabled to work with 3 different ways: Dout not control scenario (value 1), Dout1 controls scenario (value 2), Dout2 controls scenario (value 3). To disable Jamming detection scenario value 0 is used.

Minimum value	Maximum value	Default value	Goes with (depends on) parameters	Value type
0	3	0		U8

8.6.8 Immobilizer scenario (ID=1607)

Immobilizer detection scenario can be enabled to work with 3 different ways: Dout not control scenario (value 1), Dout1 controls scenario (value 2), Dout2 controls scenario (value 3). To disable Immobilizer detection scenario value 0 is used.

Minimum value	Maximum value	Default value	Goes with (depends on) parameters	Value type
0	3	0		U8

8.6.9 Immobilizer ignition timeout(ID=1609)

This feature sets the time, in seconds, on which ignition can be turned off without additional iButton identification.

Minimum value	Maximum value	Recommended value	Goes with (depends on) parameters	Value type
5	65535	-		U8

8.6.10 iButton list checking scenario (ID=1608)

iButton list checking detection scenario can be enabled (value 1) or disabled (value 2).

Minimum	Maximum	Default value	Goes with (depends on)	Value

value	value		parameters	type
0	3	0		U8

8.6.11 Excessive Idling detection (ID=1610)

If ignition is ON and no movement, event will be generated when TMO reached. This functionality is 1 – enabled, 0 – disabled (default).

Minimum value	Maximum value	Recommended value	Goes with (depends on) parameters	Value type
0	255	-	**Time to stationary (ID=1611)** **Time to movement (ID=1612)**	U8

8.6.12 Time to stationary (ID=1611)

If ignition is ON and no movement, event will be generated when TMO reached. This functionality is 1-enabled, 0-disabled (default).

Minimum value	Maximum value	Recommended value	Goes with (depends on) parameters	Value type
0	255	-	**Scenario Enable (ID=1610)** **Time to movement (ID=1612)**	U8

8.6.13 Time to movement (ID=1612)

If ignition is ON and no movement, event will be generated when TMO reached. This functionality is 1 – enabled, 0 – disabled (default).

Minimum value	Maximum value	Recommended value	Goes with (depends on) parameters	Value type
0	255	-	**Time to stationary (ID=1611)** **Scenario Enable (ID=1610)**	U8

8.6.14 Trip (ID=1280)

This parameter enables ability to detect START and STOP of the trip.

Minimum value	Maximum value	Recommended value	Goes with (depends on) parameters	Value type
0	1	-		U8

8.6.15 Start Speed (ID=1281)

This parameter represents speed, which is detected as minimum speed to indicate TRIP START and generate event.

Minimum value	Maximum value	Recommended value	Goes with (depends on) parameters	Value type
0	255	-		U8

8.6.16 Ignition Off Timeout (ID=1282)

This parameter represents timeout to wait if ignition is off in order to detect TRIP STOP and generate event.

Minimum	Maximum	Recommended	Goes with (depends on)	Value

value	value	value	parameters	type
0	65535	-		U16

8.6.17 Trip distance mode (ID=1283)

There are three Trip types to choose: Between records, continuous trip, continuous. Between records – distance is counted separately for every record. Continuous trip – distance in records is summed up for the trip duration. Continuous – Distance is counted despite the trip end or ignition off state(trip value is saved to flash memory). For this feature I/O#10 ODOMETER must be enabled. If I/O ODOMETER is enabled, and Continuous distance counting variable is set to Continuous (value 1), TRIP distance is going to be counted continuously (from TRIP start to TRIP stop) and shown as I/O ODOMETER value.

Parameter	ID	Value
Trip distance mode	1283	0 –Between records
		1 – Continuous trip
		2 – Continuous

8.6.18 Enable odometer value setting (ID=1284)

Enables entering the current value of the odometer.

Minimum value	Maximum value	Recommended value	Goes with (depends on) parameters	Value type
0	1	-		U8

8.6.19 Continuous odometer value (ID=1285)

Enters a current odometer value.

Minimum value	Maximum value	Recommend ed value	Goes with (depends on) parameters	Value type
0	4294967295	-		U32

8.6.20 Remember iButton ID, while trip is detected(ID=1286)

This feature saves the iButton ID to flash memory and sends it with every record, while trip is detected.

Minimum value	Maximum value	Default value	Goes with (depends on) parameters	Value type
0	1	0		U8

8.6.21 Geofencing

In this chapter it is explained how to get all parameters for the first Geofence zone (all ID numbers are for the 1st zone). And at the end of the chapter (part 8.6.10) is presented a table with the IDs of all the rest Geofence zones.

8.6.21.1 Frame border (ID=1020)

Geofence border thickness, measured in meters.

Minimum	Maximum	Recommended	Goes with (depends on)	Value

value	value	value	parameters	type
0	1000000	1000	**All Geofencing parameters**	U32

8.6.21.2 Geofence Zone #1 Shape (ID=1030)

Geofence shape parameter can be: circle – value 0; rectangle – value 1.

Minimum value	Maximum value	Recommended value	Goes with (depends on) parameters	Value type
0	1	-	**All Geofencing parameters**	U8

8.6.21.3 Geofence Zone #1 Priority (ID=1031)

Parameter defines Geofence priority: 0 is disabled, 1 – low, 2 – high, 3 – panic;

Minimum value	Maximum value	Recommended value	Goes with (depends on) parameters	Value type
0	3	-	**All Geofencing parameters**	U8

8.6.21.4 Geofence Zone #1 Generate Event (ID=1032)

Generate event on:

a) On exiting zone – value 0;

b) On entering zone – value 1;

c) On both – value 2;

Minimum value	Maximum value	Recommended value	Goes with (depends on) parameters	Value type
0	3	-	**All Geofencing parameters**	U8

8.6.21.5 Geofence Zone #1 Longitude (X1) (ID=1033)

Parameter has two meanings dependent on zone shape. If shape is a rectangle, then ID=10333 is left down corner X coordinate. If shape is a circle, then ID=1033 is center of that circle X coordinate.

Sample value: 25.30528

Minimum value	Maximum value	Recommended value	Goes with (depends on) parameters	Value type
-180	180	-	**All Geofencing parameters**	Float

8.6.21.6 Geofence Zone #1 Latitude (Y1) (ID=1034)

Parameter has two meanings dependent on zone shape. If shape is a rectangle, then ID=1034 is left down corner Y coordinate. If shape is a circle, then ID=1034 is center of that circle Y coordinate.

Minimum value	Maximum value	Recommended value	Goes with (depends on) parameters	Value type
-90	90	-	**All Geofencing parameters**	Float

8.6.21.7 Geofence Zone #1 Longitude (X2) (ID=1035)

Parameter has two meanings depending on zone shape. If shape is a rectangle, then ID=1035 is right upper corner X coordinate. If shape is a circle, then ID=1035 is radius of circle with center of ID=1033 and ID=1034.

For rectangle:

Minimum value	Maximum value	Recommended value	Goes with (depends on) parameters	Value type
-180	180	-	**All Geofencing parameters**	Float

For circle:

Minimum value	Maximum value	Recommended value	Goes with (depends on) parameters	Value type
0	1000000	1000	**All Geofencing parameters**	Float

8.6.21.8 Geofence Zone #1 Latitude (Y2) (ID=1036)

If shape is rectangular, then ID=1036 is right upper corner Y coordinate. If shape circle, ID=1036 is not used.

Minimum value	Maximum value	Recommended value	Goes with (depends on) parameters	Value type
-90	90	-	**All Geofencing parameters**	Float

Other 4 GeoFence zone's parameters have the same logic as shown in GeoFence Zone #1.

GeoFence Zone Number	Geofence Zone's parameters
1	1030-1036
2	1040-1046
3	1050-1056
4	1060-1066
5	1070-1076

8.6.22 AutoGeofencing

8.6.22.1 Activation Timeout (ID=1102)

Parameter represents AutoGeofencing activation timeout in seconds.

Minimum value	Maximum value	Recommended value	Goes with (depends on) parameters	Value type
0	65535	60	**Priority (ID=1103)**	U16

8.6.22.2 Deactivate by (ID=1100)

Parameter defines Autogeofence deactivation source. Value 1 is dedicated for attached iButton, value 0 – for Ignition.

Minimum value	Maximum value	Recommended value	Goes with (depends on) parameters	Value type
0	1	-	**Priority (ID=1103)** **iButton List (ID=7000-7499)**	U8

8.6.22.3 AutoGeofence event Priority (ID=1103)

Parameter defines AutoGeofence event priority: 0 is Disabled, 1 – low, 2 – high;

Minimum value	Maximum value	Recommended value	Goes with (depends on) parameters	Value type
0	2	1	**AutoGeofence event generating (ID=1104)**	U8

8.6.22.4 AutoGeofence event generating (ID=1104)

Generate event: 0 – on exiting zone, 1 – on entering zone, 2 – on both;

Minimum value	Maximum value	Recommended value	Goes with (depends on) parameters	Value type
0	2	0	**Priority (ID=1103)** **AutoGeofence event Priority (ID=1103)**	U8

8.6.22.5 Radius (ID=1105)

Parameter represents radius of circle with center device coordinates after activating AutoGeofence feature.

Minimum value	Maximum value	Recommended value	Goes with (depends on) parameters	Value type
0	1000000	100	**Priority (ID=1103)** **Deactivate by (ID=1100)**	U32

8.6.23 iButton List (ID=7000-7499)

Read 5.4.4.

Minimum value	Maximum value	Recommended value	Goes with (depends on) parameters	Value type
0	FFFFFFFF FFFFFFFF	-	**iButtons list checking (ID 1608)** **Deactivate by (ID=1100)**	U64

8.7 I/O parameters

I/O properties are additional data sources which are recorded along with usual GPS data.

8.7.1 I/O#1 Priority (ID=2000)

Parameter defines I/O property type of priority: 0 is disabled, 1 – low, 2 – high, 3 – panic.

Minimum value	Maximum value	Recommended value	Goes with (depends on) parameters	Value type
0	3	1	**I/O#1 High level (ID=2001)** **I/O#1 Low level (ID=2002)** **I/O#1 event generation type (ID=2003)** **I/O#1 averaging length (ID=2004)**	S8

8.7.2 I/O#1 High level (ID=2001)

Parameter defines high value of triggered I/O property. This parameter is used to set thresholds for I/O properties to generate events.

Minimum value	Maximum value	Recommended value	Goes with (depends on) parameters	Value type
-2147483647	2147483647	1	**I/O#1 Priority (ID=2000)** **I/O#1 Low level (ID=2002)**	S32

			I/O#1 event generation type (ID=2003) **I/O#1 averaging length (ID=2004)**	

8.7.3 I/O#1 Low level (ID=2002)

Parameter defines low value of triggered I/O property. This parameter is used to set thresholds for I/O properties to generate events.

Minimum value	Maximum value	Recommended value	Goes with (depends on) parameters	Value type
-2147483647	2147483647	0	**I/O#1 Priority (ID=2000)** **I/O#1 High level (ID=2001)** **I/O#1 event generation type (ID=2003)** **I/O#1 averaging length (ID=2004)**	S32

8.7.4 I/O#1 event generation type (ID=2003)

Parameter defines when event is sent: 0 – on range exit, 1 – on range entrance, 2 – both, 3 – monitoring, 4 – hysteresis, 5 – on changes.

Minimal value	Maximum value	Recommended value	Goes with (depends on) parameters	Value type
0	4	3	**I/O#1 Priority (ID=2000)** **I/O#1 High level (ID=2001)** **I/O#1 Low level (ID=2002)** **I/O#1 averaging length (ID=2004)**	S8

8.7.5 I/O#1 averaging length (ID=2004)

Parameter defines I/O property sample length to average. If no averaging needed default value is 1.

Minimum value	Maximum value	Recommended value	Goes with (depends on) parameters	Value type
0	2592000	1	**I/O#1 Priority (ID=2000)** **I/O#1 High level (ID=2001)** **I/O#1 Low level (ID=2002)** **I/O#1 event generation type (ID=2003)**	S32

Other I/O property elements can be configured in same logic. All I/O element parameters are listed in the next table.

I/O Element Number	I/O element parameters
Digital Input 1	2000-2004
Digital Input 2	2010-2014
Digital Input 3	2020-2024
Digital Input 4	2030-2034
Analog Input 1	2040-2044
Digital Output 1	2050-2054
Digital Output 2	2060-2064
GNSS PDOP	2070-2074
GNSS HDOP	2080-2084
External Voltage	2090-2094
GNSS Power	2100-2104
Movement Sensor	2110-2114
Odometer Value	2120-2124
GSM Operator	2130-2134
Speed	2140-2144
iButton ID	2150-2154
Data Mode	2160-2164
GSM Signal	2170-2174
Deep Sleep	2180-2184
Cell ID	2190-2194
Area Code	2200-2204
Dallas Temperature 1	2210-2214
Dallas Temperature 2	2220-2224
Dallas Temperature 3	2230-2234
Battery Voltage	2240-2244
Battery Current	2250-2254
Ignition	2260-2264
Network Type	2270-2274
Continuous odometer	2280-2284
Dallas Temperature ID 1	2290-2294
Dallas Temperature ID 2	2300-2304
Dallas Temperature ID 3	2310-2314

8.8 LV-CAN features

8.8.1 CAN Mode

Choose an adapter which will be connected to device.

Parameter	ID	Value
CAN Mode	1620	0 – Auto Detect
		1 – LV-CAN200
		2 – ALL-CAN300

8.8.2 I\O Send as 0 when ignition is off

Sends LV-CAN200/ALL-CAN300 I\O values as “0” when ignition turns off

Parameter	ID	Value
Send I\O as 0 when ignition is 0	1621	0 – Disable
		1 - Enable

8.9 SMS event configuration

8.9.1 I/O#1 element SMS event configuration (ID=5100)

Command sets SMS warning on I/O#1 element.

SMS Format: setparam X Y,W,Z
X – ID
Y – Enable/Disable (1/0)
W – Telephone number INDEX (See **8.4.18 SMS Event Predefined Numbers paragraph**, ID 150 – INDEX 0; ID151 – INDEX 1, …)
Z – SMS Text

Example: “setparam 5100 1,5,Digital Input 1 Event!”

Other I/O element SMS events can be configured in same logic. All I/O element SMS event IDs are listed in the next table.

Element name (default SMS Event Text)	ID
Digital Input 1	5100
Digital Input 2	5101
Digital Input 3	5102
Digital Input 4	5103
Analog Input 1	5104
Digital Output 1	5105
Digital Output 2	5106
GNSS PDOP	5107
GNSS HDOP	5108
External Voltage	5109
GNSS Power	5110
Movement Sensor	5111
Odometer Value	5112
GSM Operator	5113
Speed	5114
iButton ID	5115
Data Mode	5116
GSM Signal	5117

Deep Sleep	5118
Cell ID	5119
Area Code	5120
Dallas Temperature 1	5121
Dallas Temperature 2	5122
Dallas Temperature 3	5123
Battery Voltage	5124
Battery Current	5125
Ignition	5126
Network Type	5127
Continuous odometer	5128
Dallas Temperature ID 1	5129
Dallas Temperature ID 2	5130
Dallas Temperature ID 3	5131
LVC Vehicle Speed	5132
LVC Accelerator Pedal Position	5133
LVC Fuel Consumed	5134
LVC Fuel Level (liters)	5135
LVC Engine RPM	5136
LVC Total Mileage	5137
LVC Fuel Level (percent)	5138
LVC Program Number	5139
LVC ModuleID	5140
LVC Engine Work Time	5141
LVC Engine Work Time (counted)	5142
LVC Total Mileage (counted)	5143
LVC Fuel Consumed (counted)	5144
LVC Fuel Rate	5145
LVC AdBlue Level (percent)	5146
LVC AdBlue Level (liters)	5147
LVC Engine Load	5148
LVC Engine Temperature	5149
LVC Axle 1 Load	5150
LVC Axle 2 Load	5151
LVC Axle 3 Load	5152
LVC Axle 4 Load	5153
LVC Axle 5 Load	5154
LVC Control State Flags	5155
LVC Agricultural Machinery Flags	5156
LVC Harvesting Time	5157
LVC Area of Harvest	5158
LVC Mowing Efficiency	5159
LVC Grain Mown Volume	5160
LVC Grain Moisture	5161
LVC Harvesting Drum RPM	5162

LVC Gap Under Harvesting Drum	5163
LVC Security State Flags	5164
LVC Tacho Total Vehicle Distance	5165
LVC Trip Distance	5166
LVC Tacho Vehicle Speed	5167
LVC Tacho Driver Card Presence	5168
LVC Driver1 States	5169
LVC Driver2 States	5170
LVC Driver1 Continuous Driving Time	5171
LVC Driver2 Continuous Driving Time	5172
LVC Driver1 Cumulative Break Time	5173
LVC Driver2 Cumulative Break Time	5174
LVC Driver1 Duration Of Selected Acti	5175
LVC Driver2 Duration Of Selected Acti	5176
LVC Driver1 Cumulative Driving Time	5177
LVC Driver2 Cumulative Driving Time	5178
LVC Driver1 ID High	5179
LVC Driver1 ID Low	5180
LVC Driver2 ID High	5181
LVC Driver2 ID Low	5182
LVC Battery Temperature	5183
LVC Battery Level (percent)	5184
Green Driving	5185
OverSpeeding	5187
Authorized Driving	5188
Immobilizer	5189
Trip	5190
Geofence Zone 1	5191
Geofence Zone 2	5192
Geofence Zone 3	5193
Geofence Zone 4	5194
Geofence Zone 5	5195
AutoGeofence	5196
Jamming Detection	5197
Idling	5198

9 FM3612 with Light Vehicles Can adapter LV-CAN200/ALL-CAN300

9.1 Purpose of Light Vehicles Can Adapter LV-CAN200/ALL-CAN300

LV-CAN200 is used to read data from light vehicles, while ALL-CAN300 is used to read data from any type of transport: light vehicles, Trucks, busses, agriculture and other special transport. With those adapters FM3612 device is able to collect and send vehicle data.

LV-CAN200/ALL-CAN300 Technical characteristics:

PARAMETER	VALUE
Supply voltage	9 to 50V
Power supply current	Average 10mA Max (peak) 100mA
Working temperature	-40..85 °C
Max working humidity	60 % (non condensate)

9.2 LV-CAN200/ALL-CAN300 program number selection

LV-CAN200/ALL-CAN300 must be set to program number which depends on vehicle model.
Correct program number is always written on LV-CAN200/ALL-CAN300 mounting scheme. Please contact Your Teltonika sales manager to get latest supported vehicle list and mounting scheme for your vehicle, please provide CAR manufacturer, model and year information.

9.2.1 LV-CAN200/ALL-CAN300 program number configuration via SMS command

LV-CAN200/ALL-CAN300 program number can be set remotely, using SMS command:

lvcansetprog X

X is new program number value.

9.2.2 Selecting LV-CAN200/ALL-CAN300 program number manually

Steps to set program number:

- Hold SWITCH down till LED stars blinking
- Release the SWITCH
- Then LED starts blinking and counting first digit of program number, (one blink means digit 1, two blink digit 2 etc.)
- To stop counter push SWITCH
- Release the SWITCH, then LED starts blinking and counting second digit of program number
- To stop counter push SWITCH
- Release the SWITCH, then LED starts blinking and counting third digit on program number
- To stop counter push SWITCH
- Release SWITCH, if programming is succeded LED will blink 10 times

Figure 54. Adapter signaling led

9.2.3 Program number logic change

Due to the growing number of supported cars, program numbers have exceeded 999. In order to maintain one number format, we are moving from 3 digits, to 4 digits program numbers.

In new LV-CAN200/ALL-CAN300 firmware (from 2017-09-01) all program numbers that were up to 999 are changed to start from 1000. So that further program numbers would continue the counting with 4 digit numbers.

However, all existing program numbers stays the same, it is just "1" appeared in front of them. Device still understands entered 3 digit program number (via SMS/GPRS), it will automatically add "1" before it. If you enter "247" - device will turn it into the "1247". In Bootloader it is only 4 digit format available, just add "1" in from of the needed program number.

Example:

If use oldest connection schemes where program number displayed as 3 digit program number:

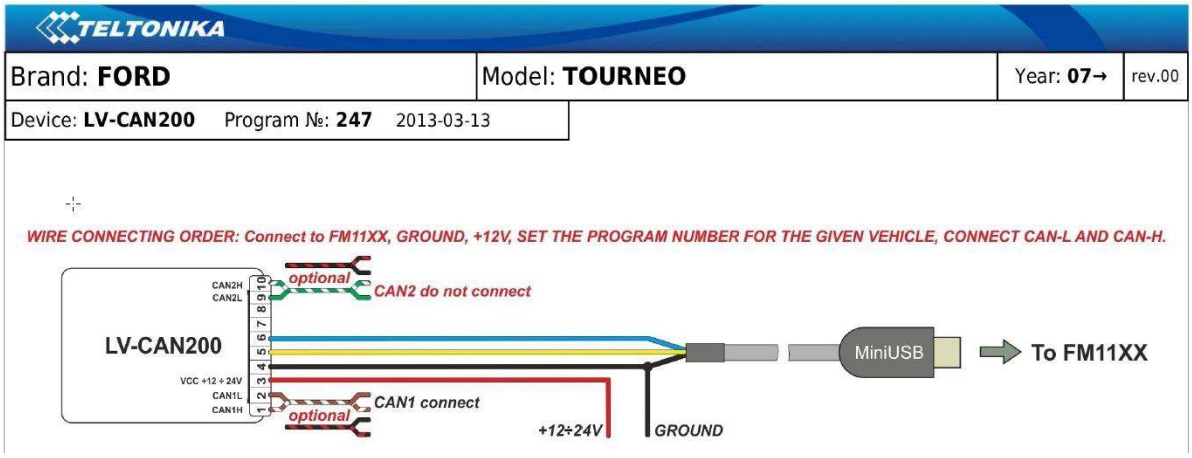

Using LV-CAN200/ALL-CAN300 Bootloader from soft version 2017-09-27 need add "1" before it:

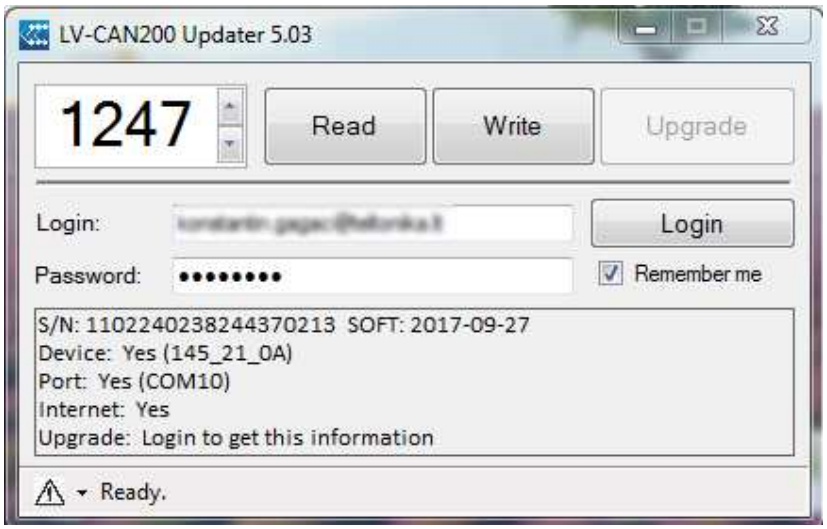

9.3 Connecting FM3612 with Light Vehicles CAN adapter

FM3612 connection with CAN adapter is different than with other FM devices, when connecting ALL-CAN300 and LV-CAN200 adapters. FM3612 has closed USB connector and CAN adapter is connected with INPUT 5 and INPUT 6 wires as shown in **Error! Reference source not found.**55.

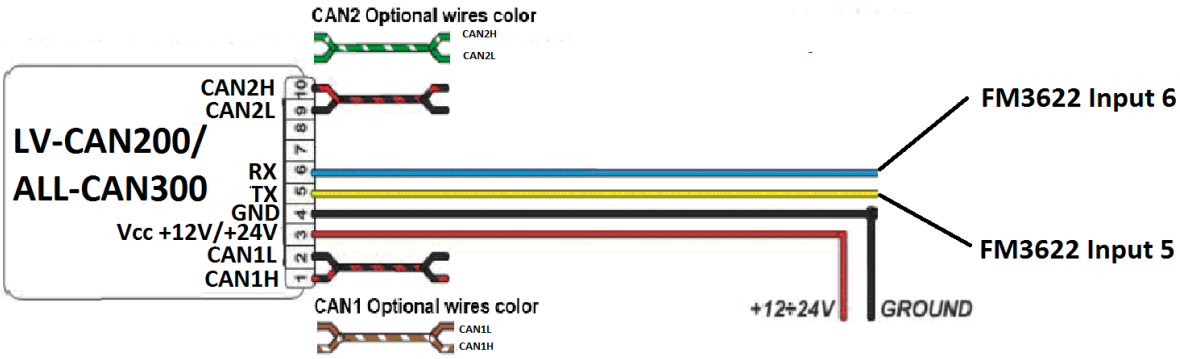

Figure 55. LV-CAN200/ALL-CAN300 Adapter connection cable pinout

LV-CAN200_6 – order code for LV-CAN200 without USB cable.
ALL-CAN300_2 – order code for ALLCAN300 without USB cable.

9.4 Connecting Light Vehicles CAN adapter

Connect Light Vehicles Can adapter Pin 1 and Pin 2 to cars CAN bus. CAN interface location of the supported light vehicle is described on mounting scheme.

Connect car power supply lines to Pin 3 positive, Pin 4 Negative.

Connect Light Vehicles Can adapter Pin 5 to FM3612 Input 5 and Pin 6 to FM3612 Input 6.
Pins 9, 10 connection is optional it depends on exact car model.
For exact pinout see sticker on Light Vehicles Can adapter.

Attention! For detailed connection diagram of adapter to light vehicle please contact Teltonika LTD sales representative and provide CAR manufacturer, model and year information.

Attention! Do not swap CAN L and CAN H lines.
Do not swap power supply lines. Make sure that voltage do not exceeds 30 V.
Power supply lines should be connected at the end of installation work.

9.5 FM3612 Configuration

FM3612 can be configured using "SCAN" function or "Offline Configuration" (Figure 59)

9.5.1 SCAN function

Scan function can be used when FM3612 is connected to CAN adapter and PC (Figures 57, 58). After connection is made Press scan button to see available CAN parameters (Note, that car engine must be started). Enable CAN data which needs to be sent to server and save configuration by pressing "Save" button.

Figure 57. Connect adapter LV-CAN200/ALL-CAN300 to FM3612

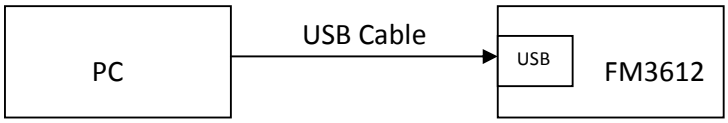

Figure 58. Connect FM3612 to PC and configure

CAN bus data which can be read from your car is shown in "Light Vehicles Can adapter supported cars" document.

9.5.2 Offline configuration

User can select which CAN parameter should be sent to server without connection to adapter. Please note that parameters depend on vehicle manufacturer and vehicle model. Please for further information check "Light Vehicles Can adapter supported cars" document.

There are two types of operations with CAN data elements:

- Monitoring of CAN bus data
- CAN bus data event capturing

Monitoring method is used when user wants to receive CAN data on regular basis, for example every 20 seconds.

Event functionality is used to store additional AVL packet when state of CAN element is changing. For example Speed changes, low fuel level, engine temperate, etc.

Send data to server field – allows enabling CAN element so it is added to the AVL data packet and sent to the server. By default, all CAN elements are disabled and FM3612 records only GPS data.

It is possible to set CAN message priority: On Low Priority, On High Priority, and On Panic. Regular packets are sent as Low priority records. When low priority event is triggered, FM3612 makes additional record with indication what was the reason for that was CAN element change. When High priority is selected, module makes additional record with high priority flag and sends event packet immediately to the server by GPRS. Panic priority triggers same actions as high priority, but if GPRS fails, it sends AVL packet to server using SMS mode if SMS is enabled in SMS settings.

Data Acquisition Type – defines when to generate event – when value enters defined range, exits it or both, also is possible to select event which you want to generate then you change values, like crossing both values in high and low levels (Hysteresis).

High and Low levels – defines CAN value range. If CAN value enter or exits this range, FM3612 generates event by “Data Acquisition Type” settings. Figure 59 show example of FM3612 CAN configuration.

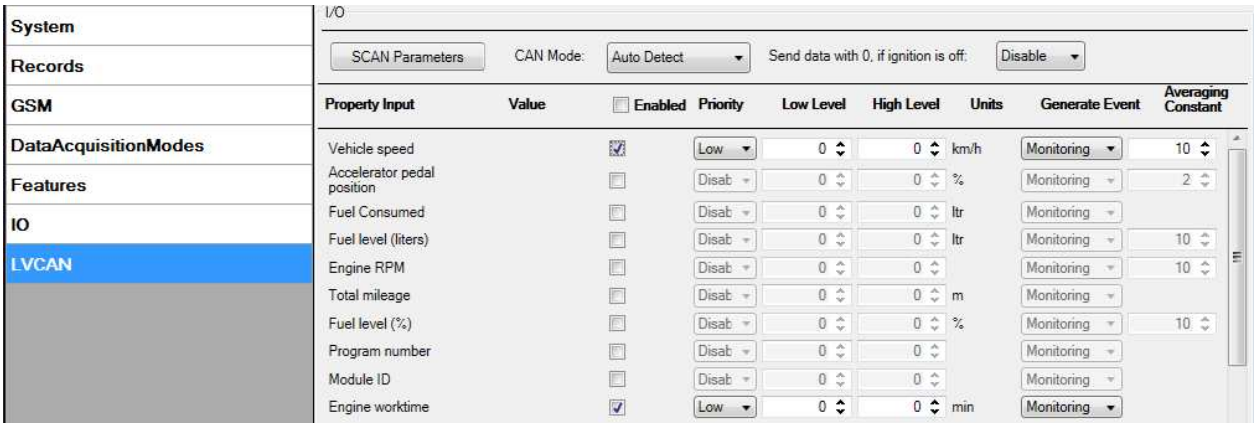

Figure 59. Configurator example

Available CAN Bus IO parameters and configuration can be found in Configurators CAN tab (Figure 59) and in next chapter "Parameters ID".

9.6 Parameters ID

When no I/O element is enabled, AVL packet comes with GPS information only. After enabling I/O element(s) AVL packet along with GPS information contains current value(s) of enabled I/O element. AVL packet decoding is described in "FMXXXX Protocols" document. List of available CAN bus data, parameter size, ID and value range you can find in table 9.1 and 9.1.1.

Table 9.1 ACQUIRED PARAMETRS IO ID

Category name	(signal) name	Size (Bytes)	Param IO ID	Value range
65265 – Cruise Control/Vehicle Speed	Vehicle Speed	1	81	0-250 km/h*
61443 – Electronic Engine Controller #2	Accelerator Pedal Position	1	82	0-100 %*
65257 – Fuel Consumption	Total Fuel Used	4	83	0-99999999liters*
65276 – Dash Display	Fuel Level [liters]	2	84	0-100 liters*
61444 – Electronic Engine Controller #1	Engine RPM	2	85	0-8200 rpm*
65217 – High Resolution Vehicle Distance	Vehicle Distance	4	87	0-2145000000 meters*
65276 – Dash Display	Fuel Level [%]	1	89	0-100 %*
Program number	LV-CAN200 Program number	4	100	0-999

NOTE:

„Total Fuel Used" is sent to server multiplied by 10.
Example: if value was 150.5 liters, „1505" will be sent to server.

Table 9.1.1 ACQUIRED ALL-CAN PARAMETERS IO ID

Property Input	Param index	Size (Bytes)	Param IO ID	Measurement units	a1	Remarks
ALL-CAN300 Program number	29	4	100	-	-	
Module ID	30	8	101	-	-	
Engine Work Time	31	4	102	min	1	
Engine Work Time (counted) *	32	4	103	min	1	
Total Mileage	33	4	87	meters	1	
Total Mileage (counted) *	34	4	105	meters	1	
Fuel Consumed	35	4	83	Ltr * 10	0.1	

Fuel Consumed (counted) *	36	4	107	Ltr * 10	0.1	
Fuel Level [%]	37	1	89	proc.*	1	
Fuel Level [liters]	38	2	84	Ltrs * 10	0.1	
Fuel Rate	39	2	110	(Ltrs * 10) / h	0.1	
AdBlue Level (percent)	40	1	111	proc.	1	
AdBlue Level (liters)	41	2	112	Ltrs * 10	0.1	
Engine RPM	42	2	85	-	1	
Engine Load	43	1	114	proc.	1	Valid range: 0 – 125%
Engine Temperature	44	1	115	°C x 10	0.1	signed
Accelerator Pedal Position	45	1	82	proc.	1	
Vehicle Speed	46	1	81	km/h	1	
Axle 1 Load	47	2	118	kg	1	
Axle 2 Load	48	2	119	kg	1	
Axle 3 Load	49	2	120	kg	1	
Axle 4 Load	50	2	121	kg	1	
Axle 5 Load	51	2	122	kg	1	
Control State Flags	52	4	123	-	-	**see table 9.2.1**
Agricultural Machinery Flags	53	8	124	-	-	**see table 9.2.1**
Harvesting Time	54	4	125	min	1	
Area of Harvest	55	4	126	m^2	1	
Mowing Efficiency	56	4	127	m^2/h	1	
Grain Mown Volume	57	4	128	kg	1	
Grain Moisture	58	2	129	proc.	1	
Harvesting Drum RPM	59	2	130	-	-	
Gap Under Harvesting Drum	60	1	131	mm	1	
Security State Flags	61	8	132	-		**see table 9.2.1**
Tacho Total Vehicle Distance	62	4	133	m	1	
Trip Distance	63	4	134	m	1	
Tacho Vehicle Speed	64	2	135	km/h	1	
Tacho Driver Card Presence	65	1	136	-	-	**see table 9.2.1**
Driver1 States	66	1	137	-	-	**see table 9.2.1**
Driver2 States	67	1	138	-	-	**see table**

						9.2.1
Driver1 Continuous Driving Time	68	2	139	min	1	
Driver2 Continuous Driving Time	69	2	140	min	1	
Driver1 Cumulative Break Time	70	2	141	min	1	
Driver2 Cumulative Break Time	71	2	142	min	1	
Driver1 Duration Of Selected Activity	72	2	143	min	1	
Driver2 Duration Of Selected Activity	73	2	144	min	1	
Driver1 Cumulative Driving Time	74	2	145	min	1	
Driver2 Cumulative Driving Time	75	2	146	min	1	
Driver1 ID High	76	8	147	ASCII		
Driver1 ID Low	77	8	148	ASCII		
Driver2 ID High	78	8	149	ASCII		
Driver2 ID Low	79	8	150	ASCII		
Battery Temperature	80	2	151	°C x 10	0.1	signed
Battery Level (percent)	81	1	152	proc.	1	

Table 9.2.1 ALLCAN300 IO element values

Idx	Description	Size, Bytes	AVL ID	Value bitmasks
52	Control state flags	4	123	**Byte0 (LSB):** **0x01** – STOP **0x02** – Oil pressure / level **0x04** – Coolant liquid temperature / level **0x08** – Handbrake system **0x10** – Battery charging **0x20** – AIRBAG **Byte1:** **0x01** – CHECK ENGINE **0x02** – Lights failure **0x04** – Low tire pressure **0x08** – Wear of brake pads **0x10** – Warning **0x20** – ABS **0x40** – Low Fuel **Byte2:** **0x01** – ESP **0x02** – Glow plug indicator **0x04** – FAP **0x08** – Electronics pressure control

				0x10 – Parking lights 0x20 – Dipped headlights 0x40 – Full beam headlights **Byte3:** 0x40 – Passenger's seat belt 0x80 – Driver's seat belt
53	Agricultural machinery flags	8	124	**Byte0 (LSB):** 0x01 – Mowing 0x02 – Grain release from hopper 0x04 – First front hydraulic turned on 0x08 – Rear Power Take-Off turned on **Byte1:** 0x01 – Excessive play under the threshing drum 0x02 – Grain tank is open 0x04 – 100% of Grain tank 0x08 – 70% of Grain tank 0x10 – Drain filter in hydraulic system of drive cylinders is plugged 0x20 – Pressure filter of drive cylinders hydraulic system is plugged 0x40 – Alarm oil level in oil tank 0x80 – Pressure filter of brakes hydraulic system is plugged **Byte2:** 0x01 – Oil filter of engine is plugged 0x02 – Fuel filter is plugged 0x04 – Air filter is plugged 0x08 – Alarm oil temperature in hydraulic system of chasis 0x10 – Alarm oil temperature in hydraulic system of drive cylinders 0x20 – Alarm oil pressure in engine 0x40 – Alarm coolant level 0x80 – Overflow chamber of hydraulic unit **Byte3:** 0x01 – Unloader drive is ON. Unloading tube pivot is in idle position 0x02 – No operator! 0x04 – Straw walker is plugged 0x08 – Water in fuel 0x10 – Cleaning fan RPM 0x20 – Trashing drum RPM **Byte4:** 0x02 – Low water level in the tank 0x04 – First rear hydraulic turned on 0x08 – Standalone engine working 0x10 – Right joystick moved right 0x20 – Right joystick moved left

				0x40 – Right joystick moved front 0x80 – Right joystick moved back **Byte5:** 0x01 – Brushes turned on 0x02 – Water supply turned on 0x04 – Vacuum cleaner 0x08 – Unloading from the hopper 0x10 – High Pressure washer (Karcher) 0x20 – Salt (sand) disperser ON 0x40 – Low salt (sand) level **Byte6:** 0x01 – Second front hydraulic turned on 0x02 – Third front hydraulic turned on 0x04 – Fourth front hydraulic turned on 0x08 – Second rear hydraulic turned on 0x10 – Third rear hydraulic turned on 0x20 – Fourth rear hydraulic turned on 0x40 – Front three-point Hitch turned on 0x80 – Rear three-point Hitch turned on **Byte7:** **0x01** – Left joystick moved right **0x02** – Left joystick moved left **0x04** – Left joystick moved front **0x08** – Left joystick moved back **0x10** – Front Power Take-Off turned on
61	Security state flags	8	132	**Byte0 (LSB):** 0x20 – bit appears when any operate button in car was put 0x40 – bit appears when immobilizer is in service mode 0x80 – immobiliser, bit appears during introduction of a programmed sequence of keys in the car. **Byte1:** 0x01 – the key is in ignition lock 0x02 – ignition on 0x04 – dynamic ignition on 0x08 – webasto 0x20 – car closed by factory's remote control 0x40 – factory-installed alarm system is actuated (is in panic mode) 0x80 – factory-installed alarm system is emulated by module **Byte2:** 0x01 – parking activated (automatic gearbox) 0x10 – handbrake is actuated (information available only with ignition on) 0x20 – footbrake is actuated (information available only with ignition on) 0x40 – engine is working (information available only when the ignition on) 0x80 – revers is on

				Byte3: **0x01** – Front left door opened **0x02** – Front right door opened **0x04** – Rear left door opened **0x08** – Rear right door opened **0x10** – engine cover opened **0x20** – trunk door opened **Byte4:** **0x01** – car was closed by the factory's remote control **0x02** – car was opened by the factory's remote control **0x03** – trunk cover was opened by the factory's remote control **0x04** – module has sent a rearming signal **0x05** – car was closed three times by the factory's remote control - High nibble (mask 0xF0 bit) **0x80** – CAN module goes to sleep mode
65	Tachograph driver card presence	1	136	**0x00** – No driver card **0x01** – Driver1 card presence **0x02** – Driver2 card presence **0x03** – Driver1 and driver2 cards present
66	Driver 1 states	1	137	**0xX0** – break/rest **0xX1** – availability **0xX2** – work **0xX3** – driving **0x0X** – no time-related warning detected **0x1X** – limit #1: 15 min before 4 1/2 h **0x2X** – limit #2: 4 1/2 h reached (continuous driving time exceeded) **0x3X** – limit #3: 15 minutes before optional warning 1 **0x4X** – limit #4: optional warning 1 reached **0x5X** – limit #5: 15 min before optional warning **0x6X** – limit #6: optional warning 2 reached
67	Driver 2 states	1	138	

9.7 SMS Configuration

All LV-CAN200/ALL-CAN300 IO elements can be configured remotely via SMS command. First ID number is always ‘2’, second, and third ID number refers to specific LV-CAN200/ALL-CAN200 IO element (table 9.2). And the last ID number refers to sections – Property; Generation Type; Low and High levels (Table 9.3).

Here’s example:

ID 2333 – configures Accelerator Pedal position parameter “High Level”.

Table 9.3 LV-CAN200/ALL-CAN300 and IO elements SMS configuration Ids range

LV-CAN200/ALL-CAN300 and IO Elements	Parameter Ids range

LVC Vehicle Speed	2320-2324
LVC Accelerator Pedal Position	2330-2334
LVC Fuel Consumed	2340-2344
LVC Fuel Level (liters)	2350-2354
LVC Engine RPM	2360-2364
LVC Total Mileage	2370-2374
LVC Fuel Level (percent)	2380-2384
LVC Program Number	2390-2394
LVC ModuleID	2400-2404
LVC Engine Work Time	2410-2414
LVC Engine Work Time (counted)	2420-2424
LVC Total Mileage (counted)	2430-2434
LVC Fuel Consumed (counted)	2440-2444
LVC Fuel Rate	2450-2454
LVC AdBlue Level (percent)	2460-2464
LVC AdBlue Level (liters)	2470-2474
LVC Engine Load	2480-2484
LVC Engine Temperature	2490-2494
LVC Axle 1 Load	2500-2504
LVC Axle 2 Load	2510-2514
LVC Axle 3 Load	2520-2524
LVC Axle 4 Load	2530-2534
LVC Axle 5 Load	2540-2544
LVC Control State Flags	2550-2554
LVC Agricultural Machinery Flags	2560-2564
LVC Harvesting Time	2570-2574
LVC Area of Harvest	2580-2584
LVC Mowing Efficiency	2590-2594
LVC Grain Mown Volume	2600-2604
LVC Grain Moisture	2610-2614
LVC Harvesting Drum RPM	2620-2624
LVC Gap Under Harvesting Drum	2630-2634
LVC Security State Flags	2640-2644
LVC Tacho Total Vehicle Distance	2650-2654
LVC Trip Distance	2660-2664
LVC Tacho Vehicle Speed	2670-2674
LVC Tacho Driver Card Presence	2680-2684
LVC Driver1 States	2690-2694
LVC Driver2 States	2700-2704
LVC Driver1 Continuous Driving Time	2710-2714
LVC Driver2 Continuous Driving Time	2720-2724
LVC Driver1 Cumulative Break Time	2730-2734
LVC Driver2 Cumulative Break Time	2740-2744
LVC Driver1 Duration Of Selected Acti	2750-2754
LVC Driver2 Duration Of Selected Acti	2760-2764

LVC Driver1 Cumulative Driving Time	2770-2774
LVC Driver2 Cumulative Driving Time	2780-2784
LVC Driver1 ID High	2790-2794
LVC Driver1 ID Low	2800-2804
LVC Driver2 ID High	2810-2814
LVC Driver2 ID Low	2820-2824
LVC Battery Temperature	2830-2834
LVC Battery Level (percent)	2840-2844

Table 9.4 LV-CAN200 IO parameters configuration

Parameter ID	Parameter name	Available values	
2xx0	Priority	0 – IO element disabled 1 – Low priority 2 – High priority 3 – Panic priority	
2xx1	Generation type	0 – Event on exit 1 – Event on entrance 2 – Event on both 3– Monitoring 4 – Hysteresis 5 – On change	
2xx2	Low level	See table 9.4 – **Allowed Values**	
2xx3	High Level		
2xx4	Averaging Constant	Minimum value	Maximum value
		0	2592000

Table 9.5 LV-CAN200 IO parameters allowed values

LV-CAN200 IO Element	Minimum value	Maximum value
Speed	0	250
Accelerator pedal position	0	100
Total fuel used	0	99999999
Fuel level (liters)	0	100
Engine RPM	0	8200
Vehicle distance	0	2145000000
Fuel level (proc.)	0	100
Program number	0	999

9.8 CAN Program Number request by SMS

CAN program number can be obtained via SMS:
SMS Text: " lvcangetprog "
Response: "**CAN Program Nr: XXX**"

9.9 Get LV-CAN info by SMS

Full LV-CAN information via SMS:
SMS Text: " lvcangetinfo"
Response:
"Prog: 139
SWRevison: 6
KernVer: 10
KernVar: 49
MdlID: 8884443332221110"

9.10 References

1. Light Vehicles Can adapter LV-CAN200/ALL-CAN300 Supported cars
2. Cars mounting scheme

10 MOUNTING RECOMMENDATIONS

10.1 Connecting Wires

- Wires should be connected while module is not plugged in.
- Wires should be fastened to the other wires or non-moving parts. Try to avoid heat emitting and moving objects near the wires.
- The connections should not be seen very clearly. If factory isolation was removed while connecting wires, it should be applied again.
- If the wires are placed in the exterior or in places where they can be damaged or exposed to heat, humidity, dirt, etc., additional isolation should be applied.
- Wires cannot be connected to the board computers or control units.

10.2 Connecting Power Source

- Be sure that after the car computer falls asleep, power is still available on chosen wire. Depending on car, this may happen in 5 to 30 minutes period.
- When module is connected, be sure to measure voltage again if it did not decrease.
- It is recommended to connect to the main power cable in the fuse box.
- Use 3A, 125V external fuse.

10.3 Connecting Ignition Wire

- Be sure to check if it is a real ignition wire – power does not disappear while starting the engine.
- Check if this is not an ACC wire (when key is in the first position, most electronics of the vehicle are available).
- Check if power is still available when you turn off any of vehicles devices.
- Ignition is connected to the ignition relay output. As alternative, any other relay, which has power output, when ignition is on, may be chosen.

10.4 Connecting Ground Wire

- Ground wire is connected to the vehicle frame or metal parts that are fixed to the frame.
- If the wire is fixed with the bolt, the loop must be connected to the end of the wire.
- For better contact scrub paint from the place where loop is connected.

PAY ATTENTION! Connecting the power supply must be carried out in a very low impedance point on-board vehicle network. These points in the car are the battery terminals. Therefore, we recommend connecting the power of FM3612 (wire GND and POWER) directly to the battery terminals. Another valid option is to connect the wires to the main POWER cable inside the fuse box (if there is none, then to the power supply where the fuses of vehicle's computer are), wire GND must be connected in a special point, designed to connect GND vehicle computer. Connecting the GND at an arbitrary point to the mass of the car is unacceptable, as static and dynamic potentials on the line GND will be unpredictable, which can lead to unstable FM3612 and even its failure.

10.5 Module installation

- FM3612 must be placed sticker on TOP (please refer picture below).
- It's forbidden to place FM3612 under metal surfaces.
- It's recommended to place FM3612 device far from car radio, speakers or alarm systems.
- FM3612 must be placed so its state is as horizontal as possible.
- FM3612 should not be seen or easily reached.
- FM3612 should be firmly fixed to the surface or cables.
- FM3612 cannot be fixed to heat emitting or moving parts.
- SIM card should be inserted in the module while the connector is plugged off (while module has no power).

It is recommended to place FM3612 device behind dashboard as close to the window as possible. A good example of device placement is displayed in a picture below.

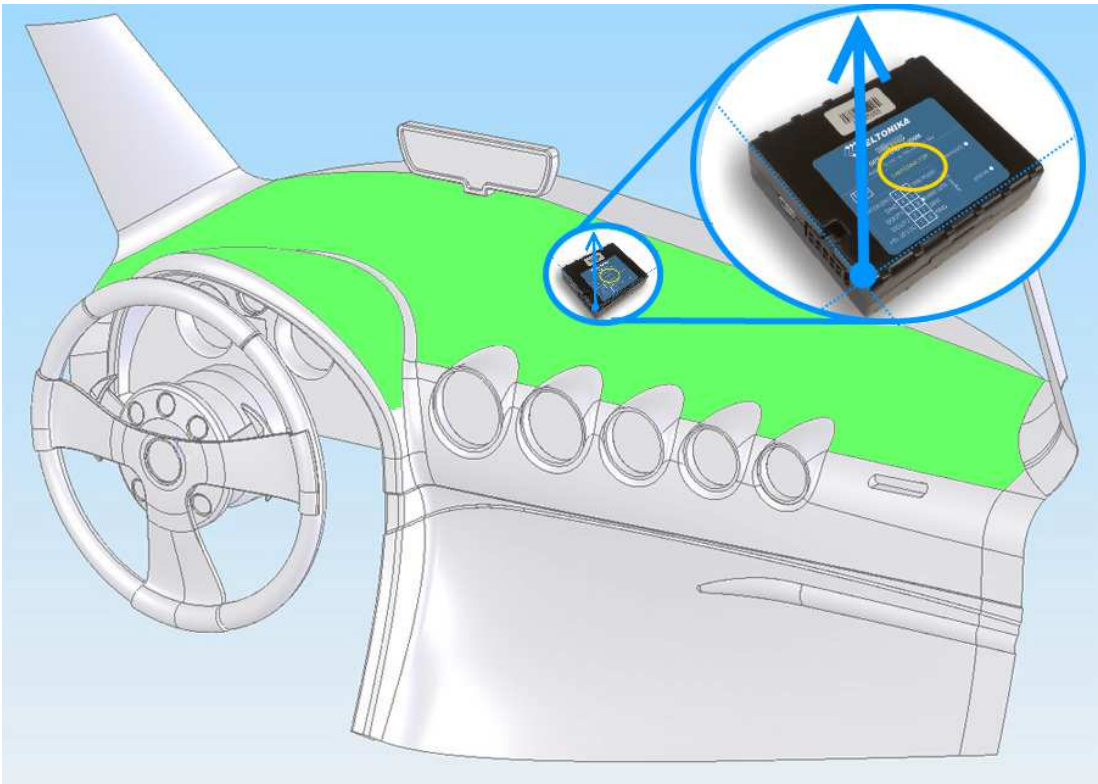

Figure 61. Correct placement of FM3612

CHANGE LOG

Nr.	Date	Version	Comments
1	2017-06-16	0.1	Preliminary draft release.
2	2017-09-01	0.2	Edited device pinout
3	2017-10-31	0.3	Added LV -CAN200/ALLAN300 migration to 4 digit program nr. information