Instructions manual Access V1.2

Please scan QR codes below to download APP

for remote control functions.

For IOS APP

For Android APP

Contents

1. Quick Start ..... - 1 -
1.1 What in the Box? ..... - 1 -
1.2 How to Get the Camera Ready? ..... - 1 -
2. Camera Overview ..... - 2 -
3. Introduction ..... - 4 -
3.1 Product advantages ..... - 4 -
3.2 Power Supply ..... - 4 -
3.3 SD Card Selection ..... - 5 -
3.4 Attention ..... - 5 -
3.5 Key Features ..... - 6 -
4. Specification ..... - 6 -
5. Operation ..... - 8 -
6. Camera operating status ..... - 9 -
6.1 Definition of Camera functions ..... - 9 -
6.2 Other settings ..... - 12 -
7. Trouble shooting ..... - 14 -
7.1 Photos Do Not Capture Subject of Interest ..... - 14 -
7.2 Camera Stops Taking Images or Won't Take Images ..... - 14 -
7.3 Night Vision Flash Range Doesn't Meet Expectation ..... - 14 -
8. Warranty ..... - 15 -

1. Quick Start

1.1 What in the box?

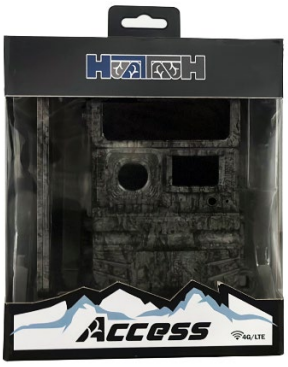

Trail camera x 1

Instruction manual x 1

Type C cable ×1

Mounting strap ×1

Antenna ×1

1.2 How to get the camera ready?

1. Insert the batteries

Open camera housing and insert the batteries as electrodes marked in battery case.
Note: 12AA Alkaline or Ni-MH are recommended. For better performance, please choose the correct “Battery Type” in the APP.

2. Insert the SD card

Note: 8-32GB, SD card is recommended. Please insert it with correct direction as marked.

3. Mount the antenna & insert SIM card

2. Camera Overview

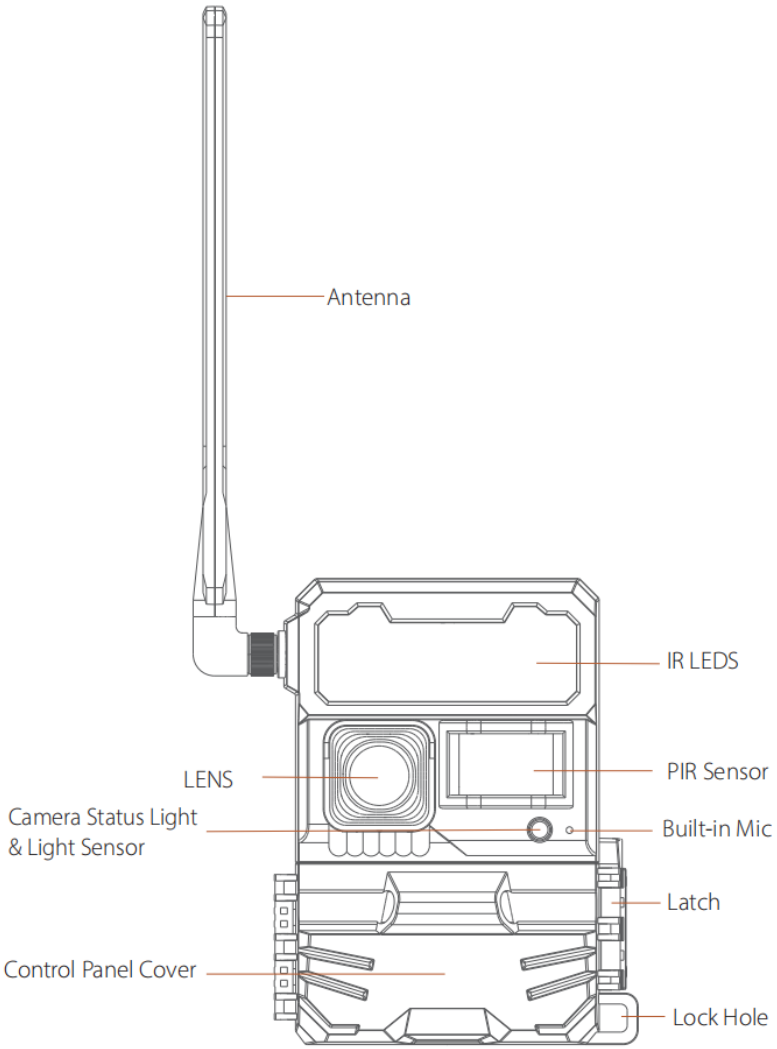

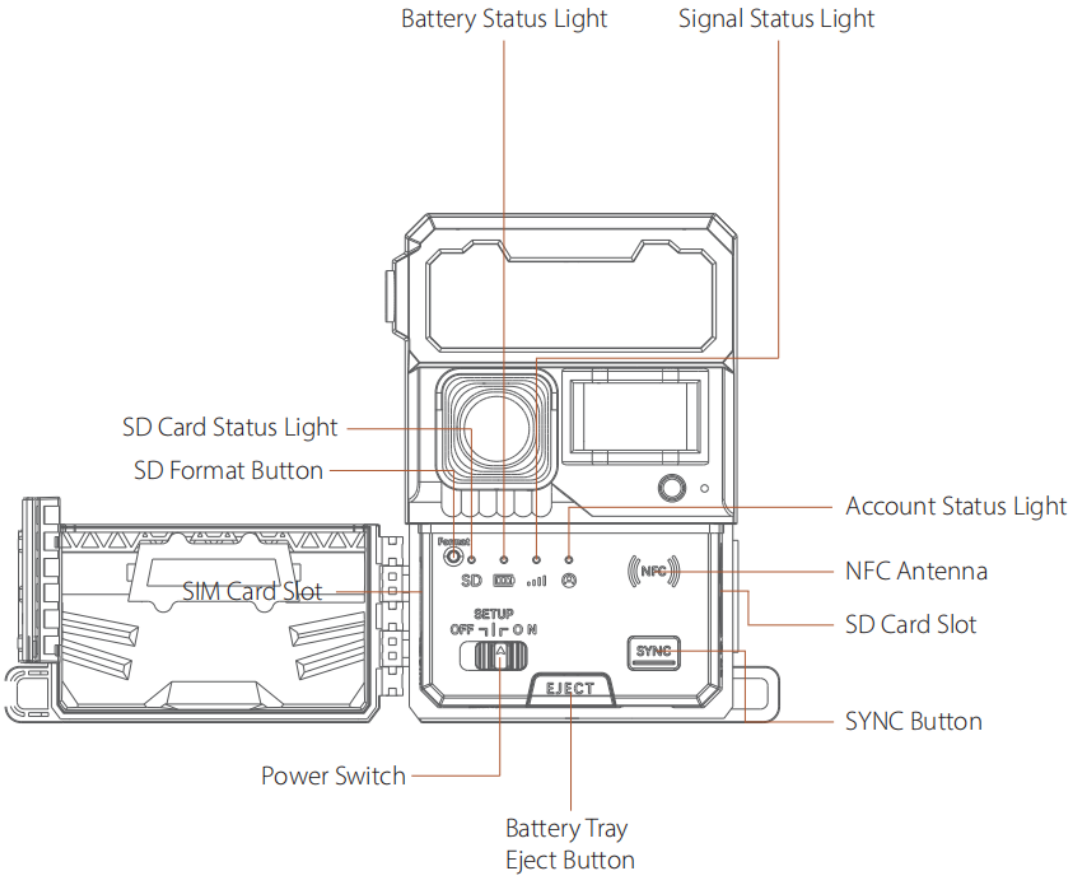
Battery Status Light
Signal Status Light
SD Card Status Light
SD Format Button
Account Status Light
NFC Antenna
SIM Card Slot
SD Card Slot
SYNC Button
Power Switch
Battery Tray
Eject Button
SETUP
OFF ON
SYNC
EJECT
NFC

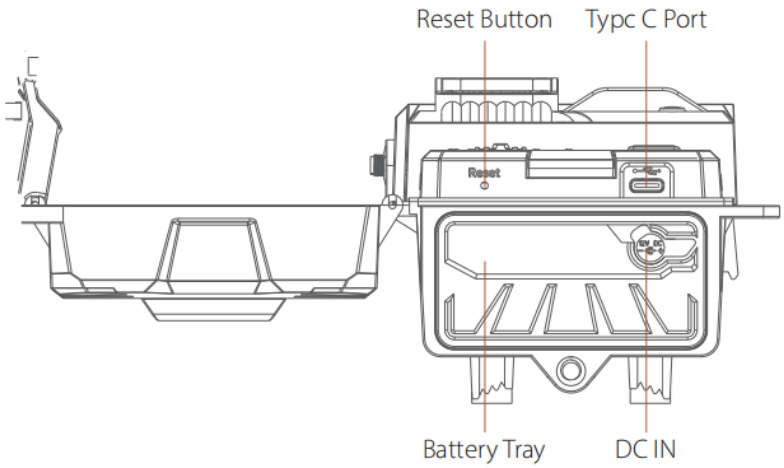
Reset Button
Typc C Port
Reset
Battery Tray
DC IN

3. Introduction

With contents in previous pages, believe you've already got a brief idea about how this camera works. Before more details presented, here we want to thank you for choosing one of our easy operation highly qualified products. You now may enjoy the excellencies reflected on this series product. May you also enjoy and adore this product as we do.

3.1 Product advantages

- Simple operation, plug-and-play.
- Intelligent image capture, switch day and night independently.
- Waterproof, shockproof, dustproof and resistant to high/low temperatures
- Support Live Stream
- Support GPS
- Real-time photo & video view on the APP

3.2 Power Supply

9-12V power supply to ensure camera well performance of all functions

A. Batteries

Camera runs on 12AA size batteries, and it can work with alkaline, high-quality Ni-MH and LI rechargeable batteries. Please choose the battery type you're using in the APP menu option "Battery Type" to reach longer operation time.

Batteries should be inserted with correct electrode position as marked in battery case. Upside down batteries electrodes may cause device malfunction. Also, we strongly recommend changing the batteries when power icon on camera screen or photo stamp is empty.

Note: Don't mix batteries types! Different batteries to be used in camera may cause permanent damage which also violates warranty policy!

Due to different settings, objects activities within camera detection zone, different brands and quality of batteries, and using environment, etc; we're not able to list out exact number of photos and videos that camera can achieve.

B. Solar Panel

To bring users better using experience, our engineers designed this camera to be able to work with most standard 12V/2A lithium battery build-in solar panels. Solar panel can't charge the batteries in using in camera batteries cases.

C. Power Adaptor—Security Surveillance Purpose

This camera can also be powered by an external 12V/2A DC adapter. Recommend to remove the AA size batteries when power adapter is used. Electrical power is recommended for security purposes.

3.3 SD Card Selection

Using a memory card is required to operate the camera. The SD slot of the camera has a 32 GB memory capacity. Before inserting or removing the memory card, the camera must be turned "OFF". Failing to do so may cause loss of or damage the pictures/ videos already recorded from the memory card. The following data shows an approximate quantity of photos or videos which can be recorded by the camera depending on the memory card capacity.

Chart below will show you the approximate capacity of different size SD cards.

SD Size / Capacity	8 GB	16 GB	32 GB
Photo (pictures) *Note: Calculated data only, the specific use of the actual situation shall prevail			
3MP	8525	17511	33754
12MP	3686	7569	14591
Video (hours) *Note: Calculated data only, the specific use of the actual situation shall prevail			
FHD	10:21:48	19:45:39	38:07:57

3.4 Attention

1. Please insert the SD card correctly, camera does not support SD card hot swap (insertion).
2. Please use high-quality AA batteries to prevent battery cells from corrosion of leaked acid.
3. Please use compatible adaptor (12V/2A output) for external power supply, and do not invert the electrode when putting in batteries.
4. In Test mode, camera will automatically power off if with no keypad touching in 3 minutes.
5. Do not interrupt power supply during firmware upgrade. That damages camera.
6. Do not frequently plug in/out SD card, batteries and DC adaptor when the camera is on.
7. Floating objects such as leaves, strings, ribbons in the motion detection zone of cameras might cause false trigger of photos and videos.
8. Do not keep camera next to hot irrelevant objects such as air conditioner exhaust vents, and light, etc. to avoid false trigger of photos or videos.
9. Please use high quality AA batteries so as to enable camera to deliver enough amperage to

IR LEDs consistently in dark environments.

3.5 Key Features

1. **0.5s** trigger speed;
2. **60° FOV lens; 60° PIR angle;**
3. 12MP/1080P@30FPS;
4. Programmable 3/12 Megapixel high-quality resolution;
5. **54pcs invisible IR LEDs**, offer 30 meters (100 feet) night vision distance;
6. Crystal clear day & night photo/video quality;
7. Support multiple functions: adjustable PIR sensitivity, Multi-shot, programmable delay between motions, Time Lapse, Timer, stamp of (camera ID, date/time, temperature, moon phase) on every single photo;
8. Available operation temperature: -25°C to 60°C;
9. APP available in IOS & Android APP store.

4. Specification

Specification Features	
Item	**Specification**
Image Sensor	3 Megapixels CMOS；16:9
Lens	DFOV=60°；F/2.0；Auto IR-Cut-Remove (at night)
Wireless	Support NFC（Sensing distance within 1cm）
	4G LTE Cat1
Operating Keys	4 buttons (including dial key)
	Key Switch：ON/Setup/OFF
	Button Switch：SYNC；Reset；SD Format
Light	5 pcs
	i. Camera status indicator: Red Colored LED ii. SD card indicator: Green/Red Bi-Colored LED iii. Battery level indicator: Green/Red Bi-Colored LED iv. Signal indicator: Green/Red Bi-Colored LED v. Account indicator: Green/Red Bi-Colored LED
IR LED	54pcs；940nm IR LED
Ambient	IR detection/Day & night detection/Temperature detection
PIR Sensor	Angle：60°
	Range：30m（100ft）
Interface	SD Card/ SIM Card/ Type-C/ DC Port
Operation Power	Battery: i. 9V~12V; 12AA; ii. 7.4V; removable lithium battery box
	DC：12V/2A

Trigger Time	0.5sec
Stand-by Time	6~8 months (6AA~12AA)
Photo	SD Card Photo Size：12M (4800x2560) ；3M (2304x1296) Send Photo Size：Thumbnail (640x360) ；HD (3M-2304x1296)
	Multi-shot：1P/2P/3P, will send all images thumbnail under burst sending mode
	File Format：.JPG
Video	SD Card Video Size：1080P (1920x1080) RTSP Video Size：720P (1280x720) Send Video Size：CVGA (512x288)
	HD Video Frame：30fps Send Video Frame：15fps
	HD Video Length：10s / 15s / 20s Send Video Length：3s
	File Format：.MP4
	Microphone
File Size	Photo： i. Thumbnail: around ~50KB ii. 3M: around ~750KB
	Video： i. CVGA: around 3s ~125KB ii. SD-1080P: around 10s ~2MB iii. RTSP-720P: around 1min ~3MB
Remotely	Files Upload/Download：HTTP(S)
	TCP Alive: Support TCP long connection keep alive, support real-time remote control
	P2P Server: Support Live Stream live video (including audio)
Memory	SD card storage
FW Update	Camera firmware/Camera module/MCU
GPS	Yes
APP	“**Huntnuh**” APP Support Android/IOS system
Accessories	Included accessories: antenna, strap, type C cable, user manual. Selectable accessories: solar panel; removable lithium battery box
Operating Temperature	-20℃ ~ 60℃
Storage Temperature	-25℃ ~ 65℃
Operation Humidity	5%-90%
Waterproof spec	IP66
Dimensions	141mm*114mm*91mm
Weight	471g

5. Operation

Operation Features			
Item	**Function**	**Operate**	**Specification**
Dial key	ON/Setup/OFF	Switch to OFF	Camera going to OFF status
		Switch to Setup	Camera going to set up status
		Switch to ON	Camera going to ON status
Button	SYNC	Under Setup, short press	i. Camera under Photo mode will take photo and upload thumbnail (if meets sending conditions) ii. Camera under Video mode will take/terminate video and upload a thumbnail video (if meets sending conditions)
	Reset	Under Setup, press for 5s	Execute Reset
	SD Format	Under Setup, press for 5s	Execute SD Format
Light	Camera status indicator (Green)	Always bright	Enter Setup mode then indicator will always bright
		Blink (1s each time)	i. PIR Test: under Setup mode, when camera is not taking image or video (parameter synchronization etc. will not affect), will blink when PIR is triggered. ii. Under Setup mode, when camera is taking image or video by manual, indicator will keep blinking until image or video has been taken finish
		Count down blink – 5s	When camera goes ON, a 5s countdown blink will be executed
	SD card indicator (Green/red)	Green light always bright	SD card inserted and status is normal
		Yellow light always bright	SD card inserted but status is abnormal (including SD card memory full)
		Red light always bright	No SD card
	Battery level indicator (Green/red)	Green light always bright	Battery level > 80%(or connect with D.C. charger)
		Yellow light always bright	Battery level between 20%~80%
		Red light always bright	Battery level < 20%
		Red light blink quickly (0.5s each time)	Low battery level, indicator blink for 5s and power off
	Signal indicator (Green/red)	Green light blink slowly (1s each time)	Camera enters Setup mode, execute network registration and parameter synchronization process in
		Green light always bright	SIM card inserted, strong signal
		Yellow light always bright	SIM card inserted, normal signal
		Red light always bright	SIM card inserted, bad signal or network registration failure
		Red light blink slowly (1s each time)	No SIM card
	Account indicator (Green/red)	Green light blink slowly (1s each time)	Camera actively performs server communication during the connection (including image sending and parameter synchronization)
		Green light always bright	Camera account has bound with camera and server communication

			connection successful (including sending successfully)
		Red light blink slowly (1s each time)	Camera account has bound with camera but server communication connection failure (including sending failure)
		Red light always bright	Camera doesn't bind to the account

Specifications are subject to change without prior notice.

6. Camera operating status

Item	Function	Specification
Work State:		
OFF		i. Main control, modules and associated peripherals all power off
	// OFF states	
Setup		i. Under Setup mode camera could execute device binding and account binding status detection ii. When camera under SETUP mode and meet sending conditions, camera support press SYNC button take picture/video by manual and upload iii. When camera under Setup mode and without any key operation, will enter OFF state after 3min *// Note:* ● *When camera under Setup state, except for active parameter synchronization, camera will not respond to remote setup and P2P connection requests*
	// SETUP states	
ON		i. On ON mode, camera enters pending trigger state ii. On ON mode, if Remote Control is Real Time, it will respond to APP operation commands immediately
	// ON states	

6.1 Definition of Camera functions

Item	Function	Specification
Camera Settings:		
Camera Mode		i. Picture state: camera takes photos only and execute thumbnail sending. ii. Video state: camera records videos only and execute thumbnail videos sending. iii. PIC+Video mode: Camera will take image and then record video. When video record finish, will execute image & video thumbnail sending together
	Picture/Video/PIC+Video *// Can be modified by APP*	
Image Size		i. Set and adjust the pixel size of the SD card to save images. ii. Image pixel size ratio is: 16:9.
	12M(4800x2560)/3M(2304x1296)	

	// Can be modified by APP	*// Note:* ● *Thumbnail size in real time mode will be* 640x360 ● *Reservation HD image is the original or secondary compressed image will be 3M(2304x1296)* ● *SD original images and HD images sent by appointment, both retaining EXIF information*
Flash Power		i. Adjust the size of the power consumption of the device under night vision conditions
	High/Low *// Can be modified by APP*	
Multi Shot		i. Select the number of consecutive pictures in a single shot ii. When burst mode is on, thumbnails of all multi shot pictures will be sent by default
	1P/2P/3P *// Can be modified by APP*	
Video length		i. Set and adjust the duration of the video saved on the SD card *// Note:* ● *The length of the video sent in immediately mode is fixed as 3s* ● *The original video (or reservation video) on the SD card is subject to the Video Length setting* ● *Under SETUP mode, the duration of manual video recording is fixed at 10s, but the recording process can be terminated at any time by clicking the SYNC button*
	10/15/20s *// Can be modified by APP*	
PIR Sensitivity		i. Set and adjust PIR sensitivity for flexible adaptation to detection distance & range ii. PIR Sensitivity-> Off, which means PIR trigger has been turned off
	OFF，1～9（Default：9） *// Can be modified by APP*	
PIR Delay		i. Represents the minimum interval time between two consecutive PIR triggers
	OFF/ON *00:00:05~23:59:59（HH:MM:SS）* *// Can be modified by APP*	
Time Lapse		i. According to the set time interval, camera will automatically capture image, no matter the PIR be triggered or not *// Note:* ● *PIR trigger and Time Lapse function coexist*
	OFF/ON *00:00:05~23:59:59（HH:MM:SS）* *Can be modified by APP*	
Timer 1		i. Camera will only respond to PIR trigger or Time Lapse work within the set timer interval, over the interval will not respond *// Note：* ● *Operating signals will not limit by Timer interval except for PIR and Time Lapse operating signals*
	OFF/ON *00:00-23:59(HH:MM-HH:MM)* *// Can be modified by APP*	
Timer 2		i. Camera will only respond to PIR trigger or Time Lapse work within the set timer interval, over the interval will not respond *// Note：* *Operating signals will not limit by Timer interval except for PIR and Time Lapse operating signals*
	OFF/ON *00:00-23:59(HH:MM-HH:MM)* *// Can be modified by APP*	

Max Num/Day		i. Max Num/Day is the maximum number of images sending per day ii. Only the work on ON mode will be limited by the number of
	No Limit/1~99 *// Can be modified by APP*	
Remote Control		i. Set the interval time between camera standby mode and remote response, and when the interval time is satisfied, the camera will actively perform server status and information synchronization ii. Real Time: Can respond APP's command immediately iii. Delay *H: Timed response to APP commands according to the set duration
	Real Time/Delay 0.5H(1/2/3/4/6/12/24H) *// Can be modified by APP*	
GPS		i. ON: Turn on GPS positioning function ii. OFF: Turn off GPS positioning function iii. GPS positioning success, map will increase the GPS information, the display format will as follow: (longitude direction_longitude, latitude direction_latitude) N or S_dd.mm'ss" E or W_dd.mm'ss"---N22.34'57" E113.55'18"
	OFF/ON *// Can be modified by APP*	
GPS Alarm		i. Turn on the GPS anti-stolen function ii. Turn off the GPS anti-stolen function
	OFF/ON *// Can be modified by APP*	
Battery Type		i. Select the battery type with the matched power detection judgment ii. When using the removable lithium battery box, the device can be automatically recognized and the APP will have no modification right
	Alkaline/NI-MH/Lithium *// Can be modified by APP*	
SD Cycle		i. When setting as OFF, once SD card is full, camera will stop working(camera will turn OFF) ii. When setting as ON, SD card will delete the earliest files(photos/videos) while SD card is going to be full, i.e. perform a cyclic overwrite/delete
	OFF/ON *// Can be modified by APP*	
Date/Time		i. When the device is connected to the server, it will automatically synchronized to the time zone of the phone and supports manual modification of APP settings ii. Support daylight saving time/winter time automatic switching and recovery
	Time Zone *// Time Zone parameter values can be modified by APP*	
Date Style		i. Selected camera date display format (photo & video stamp display) ii. The initial default date format is: DD-MM-YYYY
	MM-DD-YYYY/DD-MM-YYYY *// Can be modified by APP*	
Firmware Update		i. Execute the camera firmware version upgrade, if the upgrade conditions are met, the camera software upgrade will be executed, and if the upgrade is successful, the camera will automatically restart; otherwise, exit the upgrade state *// Note:* ● *If the upgrade file in the SD card is not satisfied, the upgrade process will not be executed*
	// Button function + APP operation	

		● *Before camera upgrade firmware, battery level will be checked, if the power less than 40%, camera will not execute upgrade process*
Module Update		i. Execute the camera module version upgrade, if the upgrade conditions are met, the camera software upgrade will be executed, and if the upgrade is successful, the camera will automatically restart; otherwise, exit the upgrade state *// Note：* ● *If the upgrade file in the SD card is not satisfied, the upgrade process will not be executed* ● *Before camera upgrade module version, battery level will be checked, if the power less than 40%, camera will not execute upgrade process*
	// Button function	
SD Format		i. Execute SD card formatting operation *// Note:* ● *When SD Format is executed, the camera will no need to perform an automatic restart*
	// Button function + APP operation	
Factory Reset		i. Execute reset setting, camera will modify all the setting as default *// Note* ● *After camera reset finish, the camera needs to execute an automatic restart*
	// Button function + APP operation	
Device Info		i. Support generating CAM_INFO.TXT to SD card by key operation on camera side ii. CAM_INFO.TXT file content and definition: (if it's no queried, then will be blank) ➢ IMEI：IMEI number ➢ SoftwareVER：Firmware version ➢ ModuleVER：Module version ➢ McuVER：MCU version ➢ ICCID：SIM cards' ICCID ➢ Account：Bound APP account ➢ AccessKey：AccessKey added by the backend server
	// Button function	

6.2 Other settings

Other Settings：

Camera Status	i. Synchronize camera device status information: ➢ Date/Time---Time of synchronization of camera status information; e.g. Jan 31,2023 12:10:59 ➢ Remote Control---Camera current setting - Remote Control setting; e.g. Real Time ➢ IMEI---Module IMEI number; e.g.: 866728064319139 ➢ SIM ID---SIM cards' ICCID; e.g. 8986112217081111235 ➢ Operator---Operator information + Type of network（2G/3G/4G）; e.g. Bell, 4G ➢ Signal---Signal strength ➢ Temp--- Fahrenheit, degree Celsius（Keep current setting）; e.g. 0℃/0℉ ➢ Battery---battery level（Retains power percentage display）; e.g. 100%, 12.0V ➢ SD--- SD card storage (total storage / used storage); e.g. 30246M, 28773M
Take Photo/Video Now	i. Only supported when Remote Control parameter is setting as Real Time ii. Take Photo/Video Now command will be recognized as once PIR trigger
Get HD Photo/Video	i. The camera needs to manually select and reserve HD Photo or FHD Video through the APP, and when the camera connects to the cloud server, it will upload the files corresponding to the reserved HD Photo/Video ii. HD picture/video package is restricted by the status of the basic package (non-free package, including third-party SIM card - basic package), that is, if the basic package is not opened, regardless of the existence of HD picture/video package, HD picture reservation and download cannot be executed
Live Stream（P2P）	i. Support Live Stream real-time video (including audio at the device, but does not support intercom) connection and playback ii. Live Stream default video resolution is 720P iii. Only in the ON state can respond to and establish a P2P connection request iv. P2P connection logic: ➢ On ON state, when under Real Time standby mode, the APP allows to initiate P2P connection request at any time ➢ On ON state, when under Delay *H standby mode, the APP can respond to P2P connection request within -5min after the camera performs transmission (or parameter synchronization) v. Live Stream function execution is restricted by the status of the corresponding device's basic package, i.e., if the basic package is not turned on, no matter whether the Live Stream package is satisfied or not, no normal P2P application or connection can be made. *// Note:* ● *Once P2P connection with a maximum continuous duration of 10min*
SIM Card	Only support Airasim SIM card
USB connection	When camera under any work state, connect camera with USB, all enter SD card reading(MSDC)

7. Trouble shooting

7.1 Photos Do Not Capture Subject of Interest

1. Check PIR sensitivity setting. For warm environmental conditions, set PIR sensitivity to “High” and for cold weather use, set the PIR sensitivity to “Low”.
2. Mount your camera in areas where no heat resources are in the camera’s field of view.
3. In some cases, set the camera near water will make the camera take images with no subject in them. Try to aim the camera over ground.
4. Try to set camera on stable and immovable objects, i.e.: large trees.
5. At night, motion detector may detect beyond range of the IR illumination. Reduce distance setting by adjusting sensor sensitivity.
6. Rising sun or sunset can trigger sensor. Camera must be reoriented.
7. If person/animal moves quickly, it may move out of the camera’s field of view before photo is taken. Move camera further back or redirect camera.

7.2 Camera Stops Taking Images or Won’t Take Images

1. Please make sure that the SD card is not full. If the card is full, camera will stop taking images. Recommend users to turn on SD Cycle to avoid such situation.
2. Check batteries to make sure that camera has enough power to work.
3. Make sure that camera power switch is at “On” position and not at “OFF” or “Test” modes.
4. Please format camera SD card before using or when camera stops taking images.

7.3 Night Vision Flash Range Doesn’t Meet Expectation

1. Please check to make sure that batteries are fully charged or left power is enough;
2. “Max Range” offers better IR flash range. Given IR flash range values are based on Max Range setting; so please adjust Night Mode to Max Range for better night vision range;
3. Recommend to use High-quality Ni-MH rechargeable AA batteries so as to deliver enough amperage to IR LEDs consistently for better flash range in dark environments;
4. To ensure accuracy and quality of night time image, please mount camera to dark environment without any obvious light sources;
5. A certain surroundings (like trees, walls, ground, etc.) within flash range can get you better night time images; please do not aim camera to total open field where there is nothing within IR flash range to reflect flash back; it’s like shinning a flashlight into sky in night, you just can’t see anything; same does camera;

8. Warranty

WARRANTY INSTRUCTIONS

We will repair the product free of charge or replace it at our discretion with an equivalent product, if it has a manufacturing defect covered by the guarantee described above. We will bear the transport costs only for the return of the products covered by the guarantee. Shipping costs for the product sent must be borne by the customer.

Repairs to damages may be subject to cost estimate and shipping to be borne by customer after our approval.

1. You can try to contact our customer service as some problems can be solved by email or phone.
2. If a product needs to be sent, please complete the RMA form. https://huntnuh.com/en/apps/help-center
3. The original receipt or a copy must be sent with the package.
4. RMA number and form must be sent with the package.

ADDRESS

1050 rue Acadie Victoriaville, Quebec, Canada G6T1R3

IMPORTANT

Under no circumstances will products returned without a Return Material Authorization (RMA) number be accepted. It is important to contact us before making a return. The customer is responsible for any loss or damage to the product that may occur during transit to our address. We recommend using a shipping method with a tracking number to ensure protection. RMA processing time is approximately two to four weeks.

To obtain warranty service, please contact us to determine the nature of the problem before returning the product under this warranty (along with a written description of the problem and print samples) for repair or exchange. https://huntnuh.com/en/apps/help-center