BDE-BLEM201P

Bluetooth Low Energy Module

- Size: 16.55mm x10.88mm x 1.5mm (Without Shielding)
  16.55mm x10.88mm x 2.2mm (With Shielding)

Key Features

- Bluetooth 4.0 single-mode compliant
- Support master and slave modes, 3+ simultaneous connections in master mode
- Integrated Bluetooth Low Energy stack, no external MCU needed
- RF performance
  - TX power: -23dBm to 0dBm
  - RX sensitivity: up to -94dBm
- Communication range: 100m (LOS)
- Ultra low power 8051 microcontroller core
  - 8K RAM with retention
  - 128K /256K in-system-programming flash
  - 23 GPIOs (21x4mA, 2x20mA)
  - 12-bit ADC with eight channels and configurable resolution
  - Data interfaces: I2C x 1, USART x 2
  - Integrate high-performance comparator
- Ultra low power consumption: 14.3mA@Transmit, 0.5uA@PowerMode3
- Antenna: PCB antenna

Descriptions

BDE-BLEM201P is a Bluetooth 4.0 single-mode compliant Bluetooth low energy module targeted at low power sensors and PC/Phone accessories.

BDE-BLEM201P highly integrates Bluetooth Low Energy radio, stack, profile and applications in a SoC, without the need of using an external MCU. The module also offers flexible hardware interfaces for the sensor application.

It enables ultra low power connectivity and data transfer for the applications that are sensitive to power consumption, size and cost.

Applications

- Medical devices
- Sports and fitness equipments
- Home electronics
- Mobile and PC accessories
- Industry automation



Block Diagram

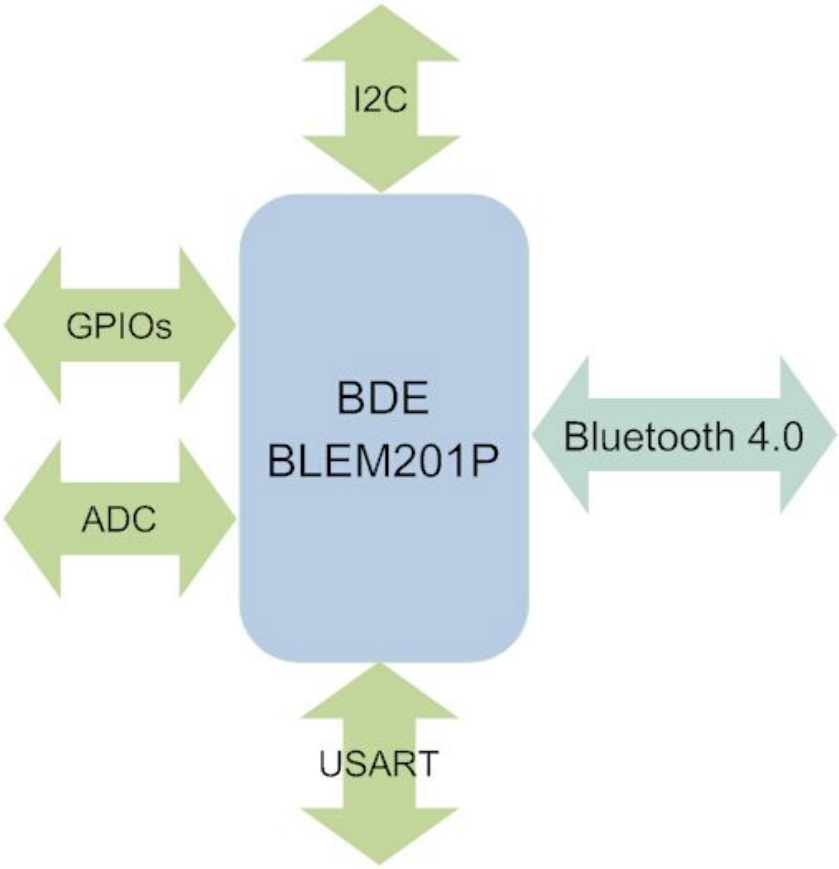

Fig. 1: Block diagram of BDE-BLEM201P

Electrical Characteristics

- Absolute maximum rating

Rating	Min	Typ	Max	Unit
Storage Temperature	-40	-	125	℃
VDD	-0.3	-	3.9	V
Other Terminals	-0.2	-	VDD+0.3≤3.9	V



- Recommended operating conditions

Rating	Min	Typ	Max	Unit
Operating Temperature	-40	-	85	℃
VDD	2	3.3	3.6	V

Overall Dimensions

Fig. 2 shows the overall dimensions of BDE-BLEM201P. The module measures 16.55mm long by 10.88mm wide by 1.5mm high without board level shield.

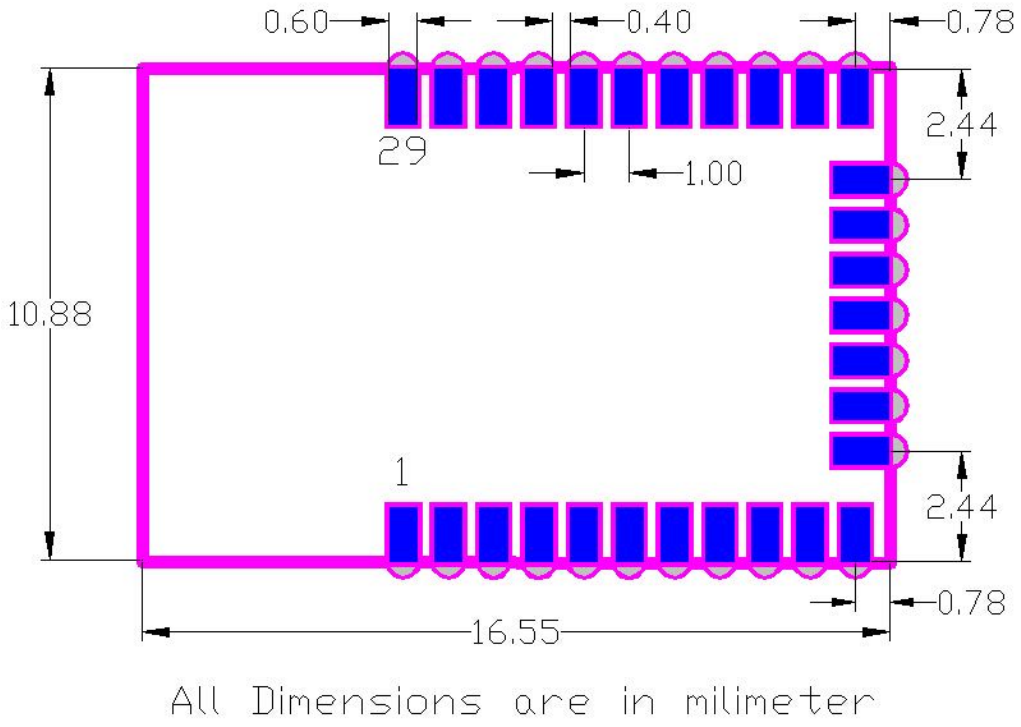

Fig. 2: Overall Dimensions of BDE-BLEM201P



Pin Definitions

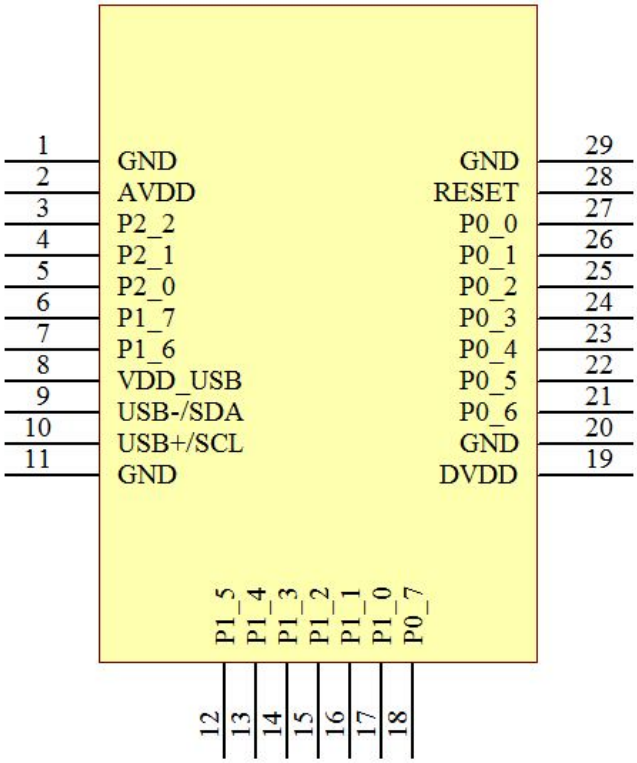

Fig. 3: The pinout of BDE-BLEM201P

Table 2: Pin definitions of BDE-BLEM201P

Pin Number	Pin Name	Definitions
1	GND	Power ground
2	AVDD	Power supply for analog circuit
3	P2.2	GPIO
4	P2.1	GPIO
5	P2.0	GPIO
6	P1.7	GPIO
7	P1.6	GPIO
8	NC	NC
9	SDA	Serial clock of I2C
10	SCL	Serial data of I2C
11	GND	Power ground



12	P1.5	GPIO
13	P1.4	GPIO
14	P1.3	GPIO
15	P1.2	GPIO
16	P1.1	GPIO
17	P1.0	GPIO
18	P0.7	GPIO
19	DVDD	Power supply of digital circuit
20	GND	Power ground
21	P0.6	GPIO
22	P0.5	GPIO
23	P0.4	GPIO
24	P0.3	GPIO
25	P0.2	GPIO
26	P0.1	GPIO
27	P0.0	GPIO
28	RESET	Reset pin, active low
29	GND	Power ground
30	RF GND	RF ground
31	RF	Power port
32	RF GND	RF ground



Table 3: Peripheral IO pin mapping

PERIPHERAL / FUNCTION	P0								P1								P2		
	7	6	5	4	3	2	1	0	7	6	5	4	3	2	1	0	2	1	0
ADC	A7	A6	A5	A4	A3	A2	A1	A0											
Operational amplifier						O	-	+											
Analog comparator			+	-															
USART 0 SPI			C	SS	MO	MI													
Alt. 2											MO	MI	C	SS					
USART 0 UART			RT	CT	TX	RX													
Alt.2											TX	RX	RT	CT					
USART 1 SPI			MI	MO	C	SS													
Alt.2									MI	MO	C	SS							
USART 1 UART			RX	TX	RT	CT													
Alt.2									RX	TX	RT	CT							
TIMER 1		4	3	2	1	0													
Alt.2	3	4												0	1	2			
TIMER 3												1	0						
Alt.2									1	0									
TIMER 4															1	0			
Alt.2																			0
DEBUG																	DC	DD	
OBSSEL											5	4	3	2	1	0			

Module Location

In order to get a fine performance when integrate the module to your product, it is advised to use the recommended module location to the respective PCB.



- Location in X-Y plane

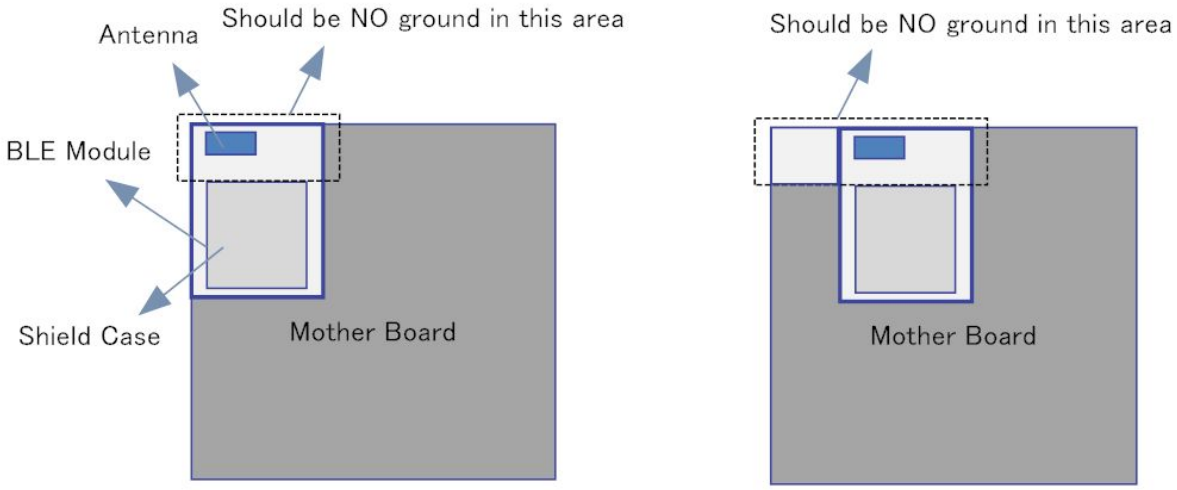

Fig. 4: Recommended location in X-Y plane

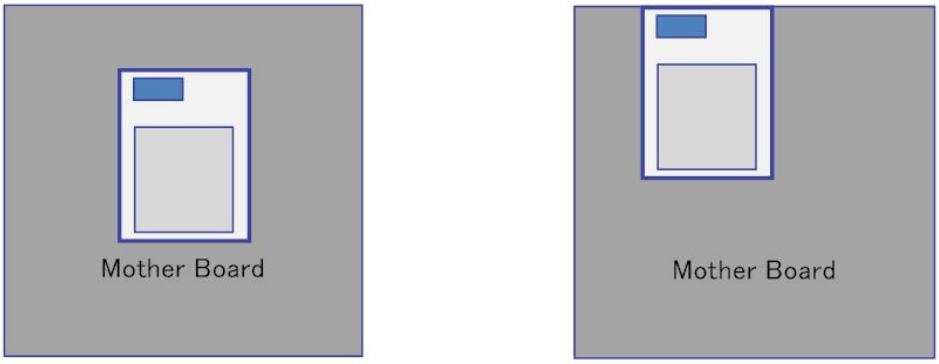

Fig. 5: Not recommended location in X-Y plane



- Location in Z plane

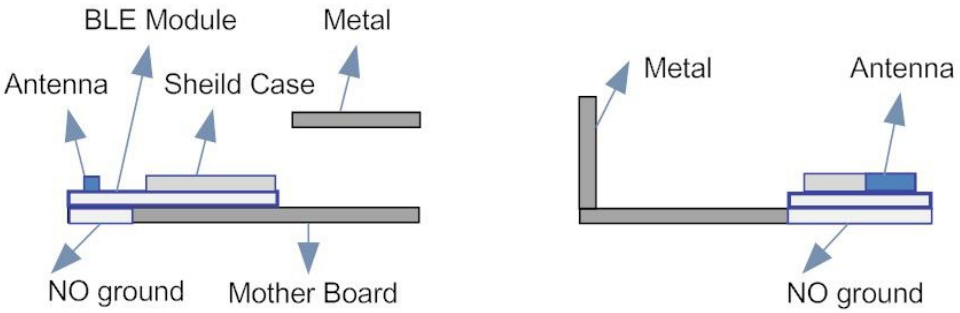

Fig. 6: Recommended location in Z plane

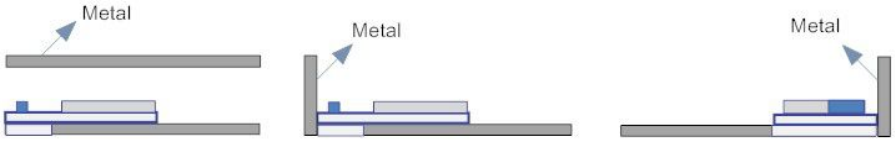

Fig. 7: Not recommended location in Z plane

Caution: The user is cautioned that changes or modifications not expressly approved by the party responsible for compliance could void the user's authority to operate the equipment.

This device complies with Part 15 of the FCC Rules. Operation is subject to the following two conditions: (1) this device may not cause harmful interference, and (2) this device must accept any interference received, including interference that may cause undesired operation.

NOTE: This equipment has been tested and found to comply with the limits for a Class B digital device, pursuant to Part 15 of the FCC Rules. These limits are designed to provide reasonable protection against harmful interference in a residential installation. This equipment generates, uses and can radiate radio frequency energy and, if not installed and used in accordance with the instructions, may cause harmful interference to radio communications. However, there is no guarantee that interference will not occur in a particular installation.
If this equipment does cause harmful interference to radio or television reception, which can be determined by turning the equipment off and on, the user is encouraged to try to correct the interference by one or more of the following measures:



-- Reorient or relocate the receiving antenna.

-- Increase the separation between the equipment and receiver.

-- Connect the equipment into an outlet on a circuit different from that to which the receiver is connected.

-- Consult the dealer or an experienced radio/TV technician for help.

FCC Radiation Exposure Statement:

This equipment complies with FCC radiation exposure limits set forth for an uncontrolled environment.

This transmitter must not be co-located or operating in conjunction with any other antenna or transmitter.

The module in this product is labeled with its own FCC ID and IC No.. The FCC ID and IC is not visible when the module is installed inside another device. Therefore, the outside of the device into which the module is installed must also display a label referring to the module. The final end device must be labeled in a visible area with the following

“Contains FCC ID: 2ABRUBDLEM201P”

Contacts

BDE Technology Co. Ltd

Address: Innovation Building C1-1105, 182 Science Ave, Science City, Guangzhou, 510663, China
494 E Thornhill Ln, Palatine, IL 60074, USA
Tel: +86-020-28065335 Fax: +86-020-28065338
Website: www.bdecomm.com Email: info@bdecomm.com

