## 2.4GHz Operation notes 2.4G操作注意事项

### Binding 对码

The supplied transmitter and receiver are already bound at production time so you don't need to do it. If you are using another transmitter or receiver, you have to first bind them before use as described below:

1. Install batteries in the transmitter and turn it off.
2. Connect the binding jumper to the battery port of the receiver.
3. Connect the battery of the receiver to any channel power supply. The red LED with blink indicating that it is in binding mode.
4. Press and hold the bind key of the transmitter and turn it on.
5. The binding process is finished when the red indicator on receiver flashes more slowly than before. Pull out the binding wire and the red indicator stays on.
6. Disconnect the receiver battery.
7. Turn off then back on the transmitter.
8. Connect all the servos to the receiver and then connect its battery.
9. Check if all servos are working as expected.
10. If anything is wrong, please bind again according aboving rsteps.

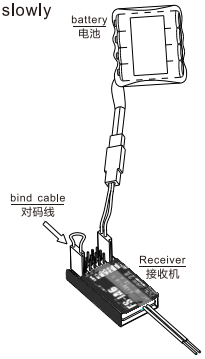


### 对码:

所有遥控产品在出厂的时候都已经对好码，您无需再次对码。如果您需要和其他发射机或接收机对码， 您必须在使用前按照以下方法对码：

1. 将电池装入发射机然后关闭发射机。
2. 将对码线插到接收机电池通道插口。
3. 将接收机电池连接至接收机任意通道，接收机红色指示灯快速闪烁表明处于对码状态。
4. 按住发射机对码按键不松手，同时打开发射机。
5. 接收机红色指示灯由快闪变成慢闪表明对码成功，拔掉对码线，红色指示灯常亮
6. 断开接收机电源。
7. 关闭发射机电源。
8. 将所有舵机连接至接收机,然后就将电池连接到接收机。
9. 检查是否所有的舵机按照要求工作正常。
10. 如果对码失败,请按以上步骤从头再来。

## FS-iA6B Receiver FS-iA6B接收机

### FS-iA6B Receiver Specification FS-iA6B接收机参数

2.4Hz AFHDS 2A
AUTOMATIC FREQUENCY HOPPING DIGITAL SYSTEM

**MODEL:FS-iA6B**

**SPECIFICATIONS :**

Number of channels: 6
Model type: fixed-wing/glider/ helicopter
RF receiver sensitivity: -105dBm;
Modulation : GFSK
System type: AFHDS2A
Channel resolution: 1024 steps
Bind port: yes
Power port: yes(VCC)
Power: 4.0-6.5VDC
Weight: 6.4g
Antenna length: 26mm
Size: 40.4*21.1*7.35mm
Color: black
Certification: CE、FCC.

机种参数：

1. 通道个数： 6个通道
2. 适合机种： 固定翼/滑翔机/直升机
3. 接收灵敏度： -105dBm
4. 调制方式: GFSK
5. 系统模式: 第二代增强版自动跳频数字系统
6. 数据分辩率: 1024级
7. 对码接口: 有
8. 电源接口: 有(VCC)
9. 电源标准: 4.0-6.5V DC
10. 整机重量: 6.4克
11. 天线长度: 26毫米
12. 外型尺寸: 40.4*21.1*7.35毫米
13. 外观颜色: 黑色
14. 安规认证: CE、FCC。

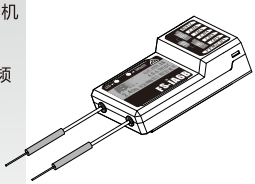

## FS-IA6B接收机与伺服器连接 Receiver and servo connections

**为了让发射及接收距离更远，请注意以下几点：**

1、尽量保证双天线笔直，否则将会减小控制范围；
2、双天线的夹角保持在90°(如图三种方式)，这并不是精确的垂直角度，重要的是尽可能保持天线互相远离；
3、天线应该尽可能远离金属导体，至少要有l.5cm左右的距离。轴电缆段不受此限制，但不要过度弯曲；
4、尽可能保持天线远离电动机、调速器，和其它的噪声源。

**In order to make sure maximum distance between the transmitter and receive can be obtained please follow the directions below:**

1. The two antennas must be kept as straight as possible. Otherwise, control range will be reduced.
2. The two antennas should be placed at a 90 degree angle to each other, as illustrated in the three pictures below.
3. The antennas must be kept away from conductive materials, such as metal and carbon. A distance of at least 15 cm is required for safe operation. Conductive materials will not affect the coaxial part of the antenna, but it is important that the coaxials are not bent to a severe radius.
4. Keep antennas away from the motor, speed controller and other noise souces as much as possible.

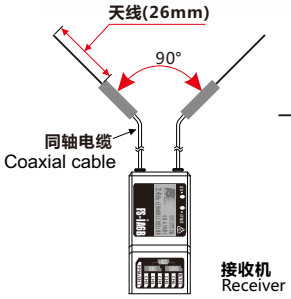

( Pic 11.1 )

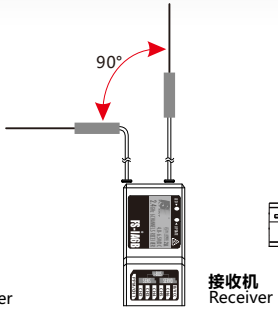

( Pic 11.2 )

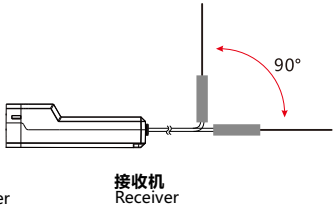

( Pic 11.3 )

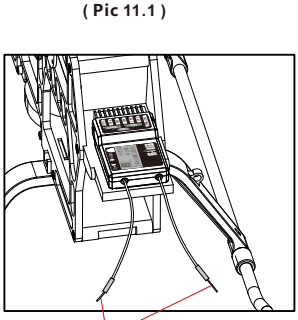


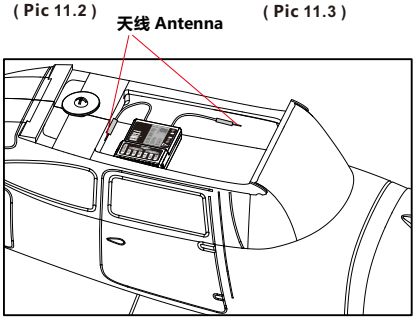

## 飞机模型的安装 Airplane model installation

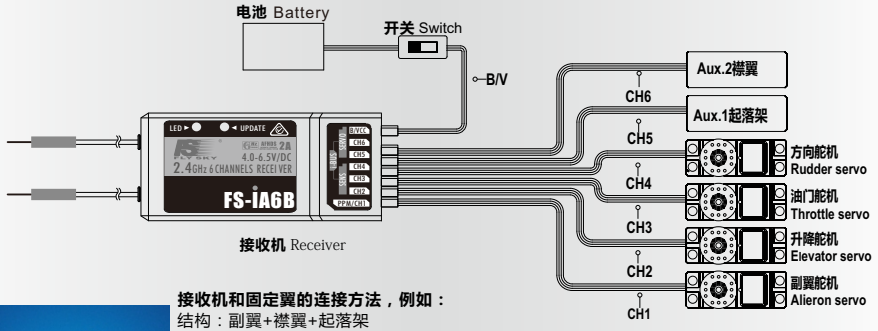


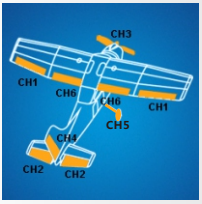


**接收机和固定翼的连接方法，例如：**
结构：副翼+襟翼+起落架

**Connection method for the receiver and the fix wing, for example:**
Structure: Two ailerons+flap+The landing gear

| | |
|---|---|
| Ch1：副翼Aileron | Ch2：升降Elevator |
| Ch3：油门Throttle | Ch4：方向Rudder |
| Ch5：起落架The landing gear | Ch6：襟翼Flap |
| | |
| | |

## 直升机模型的安装 Helicopter model installation

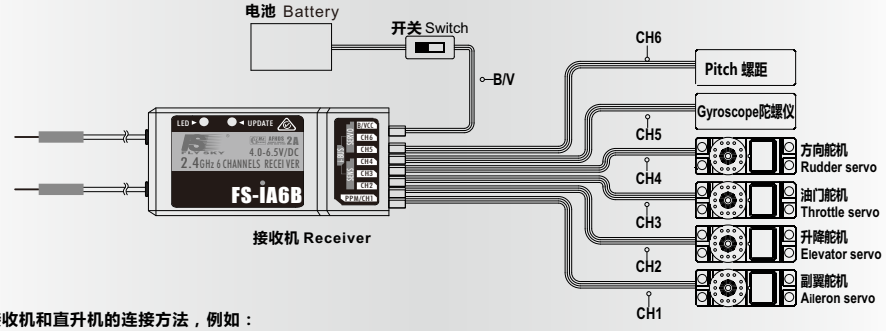


**接收机和直升机的连接方法，例如：**
结构：可变螺距（120度）+陀螺仪

**Receiver and helicopter connections, for example:**
Structure: variable pitch(120 degrees)+governor

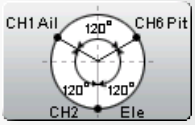


| | |
|---|---|
| Ch1：副翼Aileron | Ch2：升降Elevator |
| Ch3：油门Throttle | Ch4：方向Rudder |
| Ch5：陀螺仪Gyroscope | Ch6：螺距Pitch |
| | |
| | |

## 接收机操作说明 Receiver operation instruction

### 接口说明 Port Setup

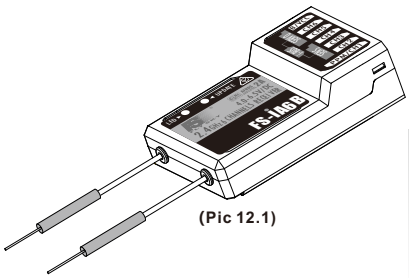


(Pic 12.1)

**CH1-CH6：** 表示接收机的相应通道；
**Bind,VCC：** 表示用于对码和输入电源的通道；
**OUT：** 表示输出PPM数据的i-BUS接口，用于连接串行总线接收机，扩展通道；
**IN：** 表示各种传感器数据的输入接口，数据采集模块可随意串接；
**CH1/PPM:** 表示CH1输出通道兼有PPM信号输出功能

**CH1-CH6:** represent relevant channel of transmitter.
**Bind,VCC:** represent the channel used for matching and input power respectively.
**OUT:** Represent i-BUS port of outputting PPMS data and be used for connecting the serial bus receiver to expand channels.
**IN:** Represent input ports of all kinds of sensor data, and data acquisition modules can be connected in serial optionally.
**CH1/PPM**: output of channel 1 or PPM output.
(Please see the RX setup)

### 对码 Binding Setup

所有的发射机和接收机，在出厂前都已对码，无需再次对码，若您需要与另一发射机进行对码和使用，请按以下方法操作：

1. 发射机装上电池，打开电源；
2. 进入主界面，选择**接收机设置**功能。点触**对码**进入对码状态；
3. 用产品包装所配的对码线，插入接收机B/VCC通道；
4. 使用4.0-6.5VDC电源，按正确极性，插入CH1- CH6的任一通道，即可进入对码状态，此时LED灯闪烁；
5. 成功对码后，发射机会自动退出对码状态；
6. 拔掉对码线，重启接收机LED常亮，此时即可插入舵机及其它数据采集模块，检测其工作是否正常；
7. 如果对码失败，可重复以上动作，重新对码。

All receivers are bound to their respective transmitter at production time. If you want to bind it with another transmitter, please follow the steps below:

1. Install the battery in the transmitter, and turn on the power.
2. Open the main menu, and select "**RX setup**" function in the second page, then touch "**Bind with a receiver**" to enter bind mode.
3. Insert the standard bind cable into the power supply channel.
4. Connect the 6VDC power connector to any channel from CH1 to CH 6 with correct polarity to enter bind mode, The receiver LED will flash at this time.
5. The transmitter will exit the bind mode automatically after having successfully bound with the transmitter.
6. Pull off the bind cable and restart the receiver. Please connect the servos and other telemetry modules to the receiver to check if everything operates normally.
7. If anything is wrong, please repeat the above steps to bind again.

Attention

**注意：配对好的发射机与接收机，当发射机或接收机因误操作而进入对码状态后，会出现不能遥控的现象，一般情况下，关闭电源重开机即可恢复正常，倘若还是不行，则需要重新对码。**

**Notice: The bound transmitter and receiver will work abnormally if the transmitter or the receiver enters the binding state by mistake. In other words, the receiver cannot be controlled by the transmitter. If so, you need to restart the transmitter and the receiver.**

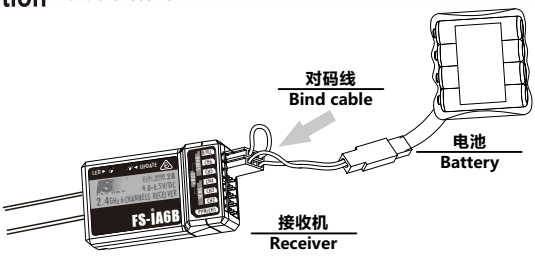


(Pic 12.2)

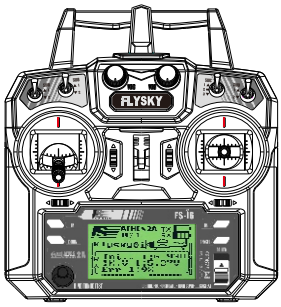


Tx power ON

## FS-CEV04 i-BUS 串行总线接收机连接说明　　i-bus Receiver Connection instruction Setup

**功能说明：**

此功能是为了应对某些模型通道太多而做的，当通道不够时可采用此配件,来增加通道输出。

**串行总线接收机，**最多可串联4个模块，共16个通道；按键K1-K4分别对应C1-C4, 用于对相应通道的设定；

**操作说明：**

1. FS-CEV04 i-BUS接收机的“IN”端口对应接收机的“OUT”端口；
2. FS-CEV04 i-BUS接收机的“OUT”端口，用于串接后级的FS-CEV04接收机，以串联的 方式使用。
3. 将此总线接收机插入接收机，打开已配对的发射机，接收机电源，LED点亮；
4. 操作发射机触控屏，选择接收机设定的主菜单，进入到舵机设定界面；
5. 选择需要扩展的通道，此时，总线接收机的LED熄灭；
6. 用对码线上的胶针，按下需要的，相应通道的按键，LED自动点亮，表示设定成功；
7. 插入舵机，检查设定是否成功；
8. 重复以上操作即可完成总线接收机4个通道的设定；
9. 当需要更多的通道扩展时，只需要在第一级总线接收机的“OUT”端口，串接新的总线接收机即可，设定的操作方法相同。



(Pic 12.3)

**Function Details :**

The system is able to support many channels. This allows the user of the system to change to a different output channel should signal strength be insufficient

**i-BUS receiver**, can connect 4 modules with 16 channels in serial at most. Button K1 and K4 correspond to C1 and C4 respectively.

**Operation instruction:**

1. FS-CEV04 i-BUS The “IN” port of FS-CEV04 receiver corresponds to “OUT” port of receiver.
2. FS-CEV04 i-BUS The “OUT” port of FS-CEV04 receiver is used to connect post level FS-CEV04 receiver.
3. Insert the bus receiver to receiver, and then switch on the matched transmitter and receiver. The LED will be on.
4. Select main menu of receiver setup to enter the interface of servo setup.
5. Select channel which need to be expanded, meanwhile LED of bus receiver is off.
6. Push relevant channel button by plastic needle of matching line. The setup is successful if LED flashes automatically.
7. Insert servo to check.
8. Set up 4 channels of bus receiver as above steps.
9. Just connect a new bus receiver with “OUT” port of first stage bus receiver if more channel needed. Set up the new one as above steps.

**注意: 当总线接收机的负载过重，电流较大时，请将主接收机的电源分支出来并联接入，单独供电加大负载的能力，否则可能会因电流过大，烧坏串联的线材。**

**Danger** **Notice: When the load of serial bus receiver is excessive and electric current is higher than usual, please supply power directly to the serial bus receiver or it will break cables.**

## FS-CP001 磁感应转速采集模块 RPM telemetry (magnetic) module setup

**功能说明：**

此功能是为了检测到模型的转速而设定的，用户可通过发射机来观察监测模 型的转速，当用户需要监测转速时可使用此配件。

**操作使用说明：**

1. 将所配的3 PIN插头，一端插入**速度采集模块**的“OUT”位置，另一端插入接收机的“IN”位置或接另外的感应器的“IN”位置，如图12.4所示；
2. 如图12.5所示，将传感器放在磁铁的旁边，磁铁固定在需要测试的轴向转动的地方，如直升机的齿 轮上面，传感器与磁铁相距两毫米以内，**磁铁**的南极或北极与传感器保持平行。
3. 打开发射机，接收机电源，在显示屏的接收机窗口内，会发现并显示 “Motor speed 2:0RPM”，试着转动，转速的值会发生变化，则表示安装成功。



(Pic 12.4)

**Function Details :**

This function allows the user to monitor turning speed via the transmitter. This is a very useful function when determination of turning speed is required

**Operation:**

1. Insert one end of standard 3 PIN plug into “OUT” port of **RPM telemetry (magnetic) module**, and insert the other end into “IN” port of receiver or other sensor, as shown in the picture 12.4.
2. As shown in the picture 12.5: Inside hub of the model, the distance between sensor and magnet is less than2mm. The North Pole or the south pole of the **magnet** has to be paralleled with sensor.
3. Switch on transmitter and receiver. “Motor speed 2:0RPM” will be shown in receiver window in display screen. Speed value changes as turning wheel, which means installation is successful.

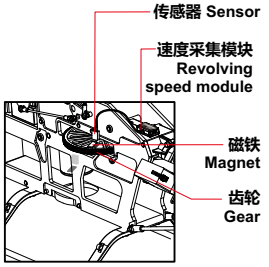


(Pic 12.5)

FCC Statement

This equipment has been tested and found to comply with the limits for a Class B digital device, pursuant to Part 15 of the FCC Rules. These limits are designed to provide reasonable protection against harmful interference in a residential installation. This equipment generates uses and can radiate radio frequency energy and, if not installed and used in accordance with the instructions, may cause harmful interference to radio communications. However, there is no guarantee that interference will not occur in a particular installation. If this equipment does cause harmful interference to radio or television reception, which can be determined by turning the equipment off and on, the user is encouraged to try to correct the interference by one or more of the following measures:

-- Reorient or relocate the receiving antenna.

-- Increase the separation between the equipment and receiver.

-- Connect the equipment into an outlet on a circuit different from that to which the receiver is connected.

-- Consult the dealer or an experienced radio/TV technician for help.

This device complies with part 15 of the FCC Rules. Operation is subject to the following two conditions:

(1) This device may not cause harmful interference, and (2) this device must accept any interference received, including interference that may cause undesired operation.

Changes or modifications not expressly approved by the party responsible for compliance could void the user's authority to operate the equipment. The antenna(s) used for this transmitter must be installed to provide a separation distance of at least 20 cm from all persons and must not be co-located or operating in conjunction with any other antenna or transmitter.