Instruction manual

9410
9450

Safety

Printer and interface overview

Starting / shutting down the printer

Sending a job for printing

Modifying a job

Consulting the history

Replacing the consumables

Head cleaning

Troubleshooting - Information

markem·imaje

A DOVER COMPANY

DECLARATION DE CONFORMITE CE
EC DECLARATION OF CONFORMITY

MARKEM-IMAJE INDUSTRIES
9 Rue Gaspard Monge, BP 110
26501 Bourg Les Valence Cedex, France
certifie que l'équipement
de marquage et codage jet d'encre,
désigné ci-dessous :

MARKEM-IMAJE INDUSTRIES
9 Rue Gaspard Monge, BP 110
26501 Bourg Les Valence Cedex, France
ensures that the ink jet marking
and coding equipment
referenced below:

	Serial nb. : N° de serie:	

est conforme aux directives européennes applicables aux équipements de marquage et codage par jet d'encre, soit :

- à la directive machines 2006/42/CE et aux normes européennes qui en constituent la réponse technique, ISO13849-1, 2008. EN12100 : 2010
- à la directive compatibilité électromagnétique 2004/108/CE et aux normes européennes qui en constituent la réponse technique, EN61000-6-2, 2005. EN 61000-6-4, 2007
- à la directive basse tension 2006/95/CE et aux normes européennes qui en constituent la réponse technique. EN60950-1: 2006 + A11:2009 +A1 :2010 + A12 :2011

En conséquence, le matériel ci-dessus cité, peut porter le marquage CE.

Bourg-les-Valence, le 3 décembre 2013

is in accordance with European directives applicable to ink jet marking and coding equipments that is to say:

- *with the machinery directive 2006/42/EC and with the relevant European standards, 2006. ISO13849-1, 2008. EN12100 : 2010*
- *with the electromagnetic compatibility directive 2004/108/EC and with the relevant European standards, EN61000-6-2, 2005. EN 61000-6-4, 2007*
- *with the low voltage directive 2006/95/EC and with the relevant European standards. EN60950-1: 2006 + A11:2009 +A1:2010 +A12:2011*

The above referenced equipment bears the CE marking.

Bourg-les-Valence, december, 3rd, 2013

La personne autorisée à rédiger cette déclaration et à constituer le dossier technique correspondant résidant dans la communauté.
The authorized person to write this declaration and to compile the relevant technical file residing in the Community.

Dominique CHANUT
Responsable Normalisation/homologation Markem-Imaje Industries
Regulatory Compliance Manager Markem-Imaje Industries

markem·imaje
A DOVER COMPANY

Markem Imaje Industries 9, rue Gaspard Monge - BP 110 - 26501 Bourg-lès-Valence Cedex France
Tél. : +33(0)4 75 75 55 00 - Fax : +33(0)4 75 82 98 10 - www.markem-imaje.com

SPECIMEN

Before using this printer, please read and fully comply with these instructions, the material safety data sheet (MSDS) for consumables used, and safety labels affixed to the printer. Servicing must be performed only by qualified people who are appropriately trained.

Liability

Markem-Imaje shall not be liable for any damage or injury resulting from any failure to follow these safety instructions, as well as good manufacturing practices and safety standards that are generally applicable in the industry, when installing, using or servicing Markem-Imaje equipment.
Any user who modifies or repairs Markem-Imaje equipment, uses consumables, spare parts or accessories other than those supplied by Markem-Imaje, or fails to comply with Markem-Imaje specifications shall have sole responsibility for the consequences thereof.
Markem-Imaje shall not be liable for any malfunction or damage caused by any modification of the equipment or use of the equipment for any purposes other than those for which it is designed. The user shall be solely responsible to take any precautions required by any use to which the user puts the Markem-Imaje equipment.
Markem-Imaje consumables (inks, cleaning products and other consumables), spare parts and accessories are designed for use with Markem-Imaje equipment.
Use of consumables, spare parts or accessories, that are not produced or recommended by Markem-Imaje for use with the specific Markem-Imaje equipment may harm the equipment and cause performance failures.
Because Markem-Imaje equipment is tested with Markem-Imaje consumables and spare parts for conformity with certain regulations and safety standards, use of non-Markem-Imaje consumables and spare parts also may be inconsistent with testing conditions and affect compliance of the equipment with certain standards. The user shall bear all risks associated with use of unsuitable consumables and spare parts.
This equipment is certified in accordance with the requirements for CE marking.

■ Health / Hygiene / Environment

For certain consumables:
□ Wearing contact lenses when handling these consumables is strictly prohibited.
□ Ink-resistant gloves and safety goggles are recommended during cleaning operation.

Max. noise level < 70 dB A.
Operating temperature : +5°C to +40°C (+41°F to +104°F)
Humidity: 0 - 90% RH with no condensation. The use of certain inks may limit the temperature and humidity ranges (see the ink specification sheet).

The printer must not be used in explosive atmospheres.

■ Fire prevention

CAUTION: For continued protection against possible fire, use only the ink/solvent mixtures specified by Markem-Imaje.

If your printer uses flammable ink or make-up:
□ Never leave containers containing ink, make-up or cleaning products, or ink-soaked rags (even dry) near the printer.
□ Install a foam, CO2 or powder extinguisher immediately adjacent to the printer (maximum 10 meters).
□ Never smoke near the printer. Affix a sign «NO SMOKING, FLAMMABLE INK» near the printer.
□ Ensure that the printer is kept particularly clean, as dried ink deposits remain highly flammable.
□ Drums of ink, make-up and cleaning solution must be closed and stored in a ventilated room.

Handling

When a printer contains consumables, it may only be moved in a vertical position, over a short distance (e.g. within a workshop). Completely drain the printer before moving it in a position other than vertical, or if it is to be transported for a longer distance (e.g. in a vehicle).
Printer weight: 25 Kg (55,1 lbs)
Due to the weight of the system, several people are required to handle it.

Installation

Installation work must be performed without fail by a team of Markem-Imaje technicians. Any person modifying the installation shall be wholly liable for such modifications.

The print head must be secured firmly in place with fastening devices. The printer must be installed in a ventilated location, away from any source of heat, flames or sparks.

The printer installation on the production line must not generate any risks for staff. The console must not be integrated on a moving system. The operator's work station faces the printer.

The printer must be connected to a single phase mains electricity network with earth ground, using the cable supplied with the printer. The standard plug on this cable must be easily accessible.

The electrical and pneumatic installations upline of the printer must comply with applicable regulations. Printer electrical characteristics: see manufacturer's plate on the printer, adjacent to the power socket.

When the printer or a part thereof is attached to a stand, the stand must be connected to earth ground.
Earth ground all conducting parts not at a voltage reference and which are related to or close to the printer (metal frames, protective guards, etc.).

For information on fastening a Markem-Imaje accessory, refer to the assembly instructions delivered with it.

The printer must be placed on a perfectly horizontal and unimpeded surface (the underside of the printer must not be obstructed).
The bottom of the console must be between 0.7 m and 1 m above floor level.
The print head must be between -2 m and +2 m from the bottom of the console.

■ Three types of installation are possible:

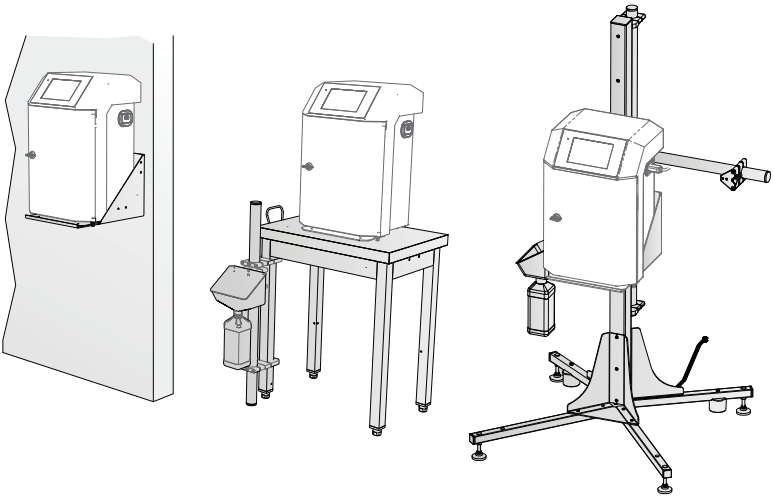

1 Wall-mounted 2 Tabletop 3 On base

• **On base**

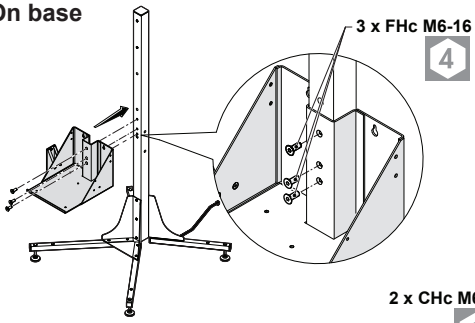

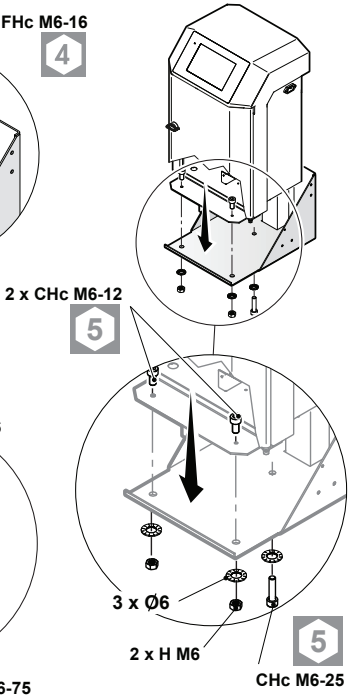

Stabilizer weights (x 2) mandatory.
They can be mounted above.

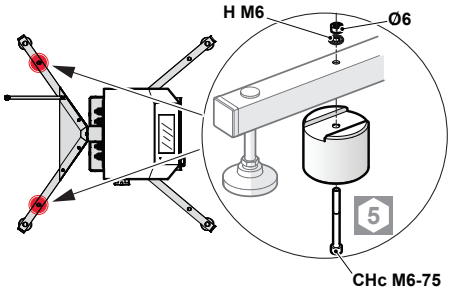

• **Wall-mounted**

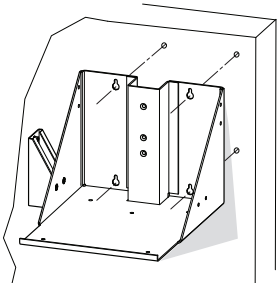

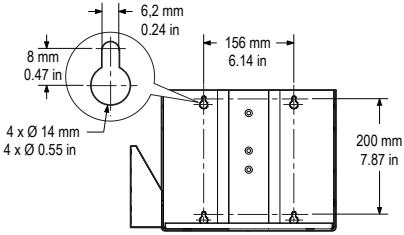

The fasteners (anchors + bolts) must withstand a weight of at least 35 kg.

Use

The printer is designed for contact-free printing by projecting ink. Any other use of the printer is prohibited, and any consequences shall be under the entire responsibility of the user.

Servicing

We recommend that maintenance work be carried out only by staff who have received technical training from Markem-Imaje and who have the appropriate personal protective equipment (safety shoes, glasses, gloves, etc.). Any maintenance work not described in this manual must be carried out by Markem-Imaje technicians.
Disconnect the printer from the mains before any operations requiring components to be removed or exchanged. Use appropriate tools for any work on the electrical and hydraulic circuits.
After each maintenance operation, the waste recepticles used should be emptied and cleaned. Do not leave rags soaked with consumables near the printer.
This unit contains a non-replaceable internal lithium ion battery. The battery may burst or explode, releasing hazardous chemicals. To reduce the risk of fire or burns, do not crush, puncture, or dispose of the battery in fire or water.

Recycling

Disposal of used batteries and rechargeable batteries (applicable in European Union countries and other European countries with selective waste collection systems).

Disposal of used electrical and electronic equipment (applicable in European Union countries and other European countries with selective waste collection systems).

These symbols indicate that the electrical and electronic device, and the batteries and rechargeable batteries therein, must not be disposed of at the end of its life as ordinary municipal solid waste. By ensuring that these items are disposed of appropriately, you play an active role in avoiding the harmful consequences that incorrect disposal could have on the environment and human health. The recycling of materials contributes to the preservation of natural resources.
By entrusting your end-of-life electrical devices to a duly authorized disposal company, you ensure that all the items therein will be handled correctly.
In all other cases and in order to safely remove batteries, rechargeable batteries and other materials, see the user manual or contact your Markem-Imaje representative.

■ Waste consumables

The Consumable waste must be managed in compliance with local regulations related to waste management and dangerous goods transport.
Transport, transit, treatment of consumable waste must be operated by entity owning appropriate waste management licences.
Consumable waste must be treated in compliance with local regulations either by recycling solution (e.g distillation), incineration with energy recovery, incineration or specific land filling.

■ FCC Rules

Caution: Changes or modifications not expressly approved by the party responsible for compliance could void the user’s authority to operate the equipment.

NOTE: This equipment has been tested and found to comply with the limits for a Class A digital device, pursuant to Part 15 of the FCC Rules. These limits are designed to provide reasonable protection against harmful interference when the equipment is operated in a commercial environment. This equipment generates, uses, and can radiate radio frequency energy and, if not installed and used in accordance with the instruction manual, may cause harmful interference to radio

communications. Operation of this equipment in a residential area is likely to cause harmful interference in which case the user will be required to correct the interference at his own expense.
For Canada :
Under Industry Canada regulations, this radio transmitter may only operate using an antenna of a type and maximum (or lesser) gain approved for the transmitter by Industry Canada.
To reduce potential radio interference to other users, the antenna type and its gain should be so chosen that the equivalent isotropically radiated power (e.i.r.p.) is not more than that necessary for successful communication.
This device complies with Industry Canada licence-exempt RSS standard(s). Operation is subject to the following two conditions: this device may not cause interference and this device must accept any interference, including interference that may cause undesired operation of the device.

■ Printer integration

If this equipment is integrated in a machine, please read the instruction manual for the machine before working on the printer.

If the printer is incorporated in a machine or assembled with other machines in a way that forms machinery covered by the Directive 2006/95/CE:
- It may not operate independently
- It must not be commissioned until the end machine in which it is incorporated has been declared to comply with the relevant provisions of the Machinery Directive and other European directives applicable to the end machine.

DECLARATION D'INCORPORATION

Déclaration d'incorporation selon la Directive Européenne Machine 2006/42/CE, annexe II B

DECLARATION OF INCORPORATION

Declaration of incorporation in terms of the European Machinery Directive 2006/42/EC, annex II B

MARKEM-IMAJE INDUSTRIES
9 Rue Gaspard Monge, BP 110
26501 Bourg Les Valence Cedex, France
certifie que l'équipement de marquage et codage jet d'encre, désigné ci-dessous :

répond aux exigences générales de sécurité et de santé de la Directive Machines 2006/42/CE, Annexe1.

Que cet équipement imprimante à jet d'encre répond de plus aux directives CE applicables, soient :

- A la Directive Machines 2006/42/CE et aux Normes Européennes qui en constituent la réponse technique : ISO13849-1 : 2008. EN12100 : 2010
- A la Directive Compatibilité Electromagnétique 2004/108/CE et aux Normes Européennes qui en constituent la réponse technique : EN61000-6-2 : 2005. EN 61000-6-4 : 2007.
- A la Directive Basse Tension 2006/95/CE et aux Normes Européennes qui en constituent la réponse technique : EN60950-1 : 2006 +A11: 2009. +A1 :2010 +A12 :2011

La documentation technique pour cet équipement imprimante à jet d'encre a été rédigée selon l'annexe VII, partie B.

Le fabricant s'engage à transmettre, à la suite d'une demande motivée des autorités nationales, les informations pertinentes concernant cet équipement imprimante à jet d'encre.

Cet équipement imprimante à jet d'encre est destiné à être incorporé dans une machine ou à être assemblé avec d'autres machines en vue de constituer une machine à laquelle s'applique la directive 2006/42/CE et qu'il ne peut fonctionner de façon indépendante.

Cet équipement imprimante à jet d'encre ne doit pas être mis en service avant que la machine finale dans laquelle il doit être incorporé ait été déclaré conforme aux dispositions pertinentes de la Directive Machines et aux Directives Européennes applicables à la machine finale.

Bourg-lès-Valence, le 3 décembre 2013

MARKEM-IMAJE INDUSTRIES
9 Rue Gaspard Monge, BP 110
26501 Bourg Les Valence Cedex, France
ensures that the ink jet marking and coding equipment referenced below:

meets the general safety and health of the Machinery Directive 2006/42/EC, Annex 1.

Ink jet printer equipment that responds more to the EC directives, that is to say:

- *with the Machinery Directive 2006/42/EC and European Standards that constitute the technical answer: ISO13849-1: 2008. EN12100 : 2010*
- *with the Electromagnetic Compatibility Directive 2004/108/EC and European Standards that constitute the technical answer: EN61000-6-2: 2005. EN 61000-6-4: 2007.*
- *with the Low Voltage Directive 2006/95/EC and European Standards that constitute the technical answer: EN60950-1: 2006 + A11:2009 +A1 :2010 +A12:2011*

The documentation for this Ink jet printer equipment has been drafted in accordance with Annex VII, Part B.

The manufacturer undertakes to forward, following a motivated request of national authorities, relevant information regarding this Ink jet printer equipment.

The Ink jet printer equipment is intended to be incorporated into machinery or assembled with other machineries to create a machinery to which the Machinery Directive 2006/42/EC and that cannot work independently.

This Ink jet printer equipment may not be put into operation until conformity of the final machine into which it is to be incorporated has been declared in conformity with the relevant provisions of the Machinery Directive and the European Directives applicable to the final machine.

Bourg-lès-Valence, December, 3rd, 2013

La personne autorisée à rédiger cette déclaration et à constituer le dossier technique correspondant résidant dans la communauté.
The authorized person to write this declaration and to compile the relevant technical file residing in the Community.

Dominique CHANUT
Responsable Normalisation/homologation Markem-Imaje Industries
Regulatory Compliance Manager Markem-Imaje Industries

markem-imaje
A DOVER COMPANY

Markem Imaje Industries 9, rue Gaspard Monge - BP 110 - 26501 Bourg-lès-Valence Cedex France
Tél. : +33(0)4 75 75 55 00 - Fax : +33(0)4 75 82 98 10 - www.markem-imaje.com

SPECIMEN

Printer overview

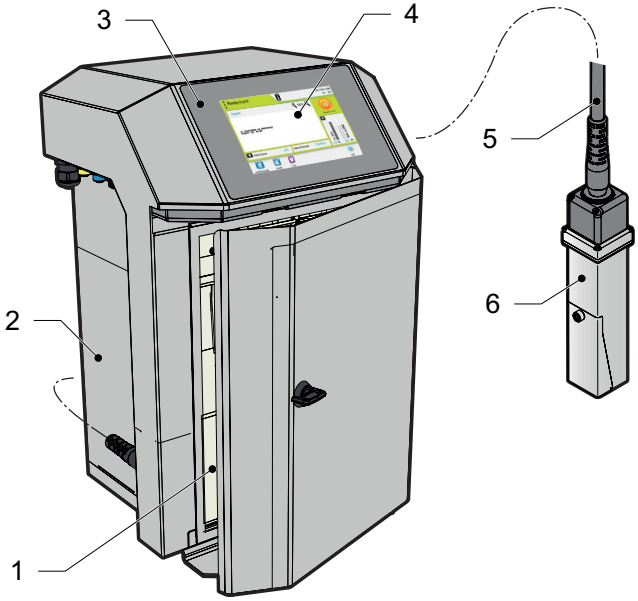

1	Hydraulics compartment
2	Cabinet
3	Power-On LED
4	Operator interface
5	Umbilical
6	Print head

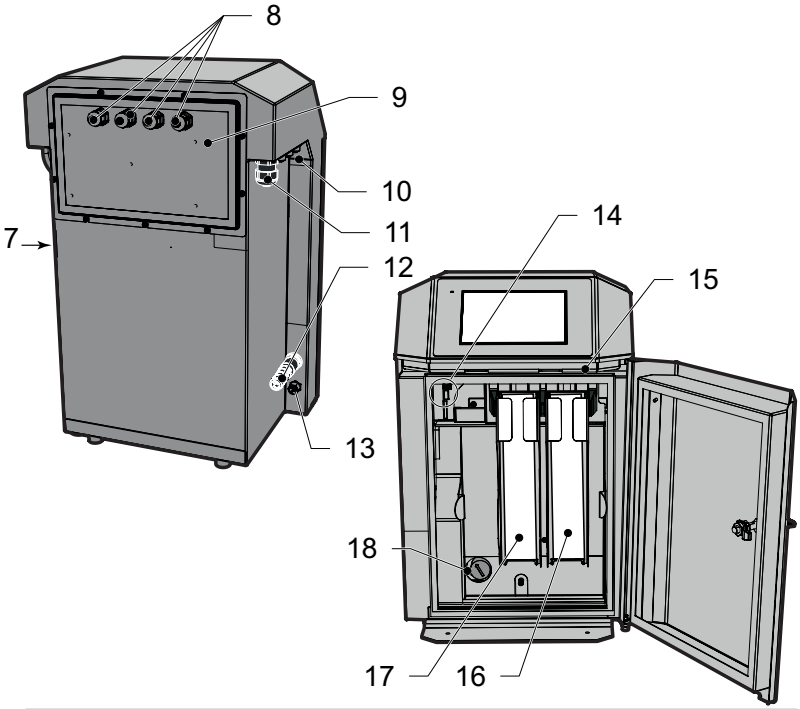

7	Manufacturer's plate	**13**	Plant air connector
8	Cable glands: other connections (Serial/Parallel Link)	**14**	USB Port SD card reader
9	Access to the electrical compartment	**15**	Air filter (model IP56)
10	Connection interface - detection cell (black) - encoder (blue) - warning (yellow)	**16**	Additive cartridge
11	Cable glands: Ethernet	**17**	Ink cartridge
12	Umbilical outlet	**18**	Pressure pump