ODCR2110 WD

TURNTABLE WITH CD/MP3 PLAYER, DOUBLE CASSETTE DECK, RADIO, BLUETOOTH & CD/USB/SD RECORDER

INSTRUCTION MANUAL

READ THIS INSTRUCTION MANUAL CAREFULLY BEFORE USE

PRODUCT FEATURES

- 33/45/78 RPM SELECTABLE TURNTABLE
- AUTOMATIC / MANUAL STOP TURNTABLE
- BELT DRIVEN SYSTEM
- BLUETOOTH WIRELESS MUSIC STREAMING WITH NFC
- PROGRAMMABLE CD/MP3 PLAYER
- DOUBLE CASSETTE DECK
- DIRECT USB/SD RECORDING FOR CD, TURNTABLE, CASSETTE, FM RADIO & AUX IN
- DIRECT CD RECORDING FOR CD, TURNTABLE, CASSETTE, AUX IN, USB/SD
- AUX IN FOR CONNECTION OF OTHER DEVICE (E.G. CD & MP3 PLAYER)
- USB/SD SLOT & CD PLAYER FOR MP3 PLAYBACK
- PLL RADIO WITH AUTO-SCANNING & PRESET STATIONS
- CLOCK ALARM / TIMER / SLEEP FUNCTION
- RCA LINE-OUT
- 45RPM ADAPTOR & REMOTE CONTROL

LOCATION OF CONTROL

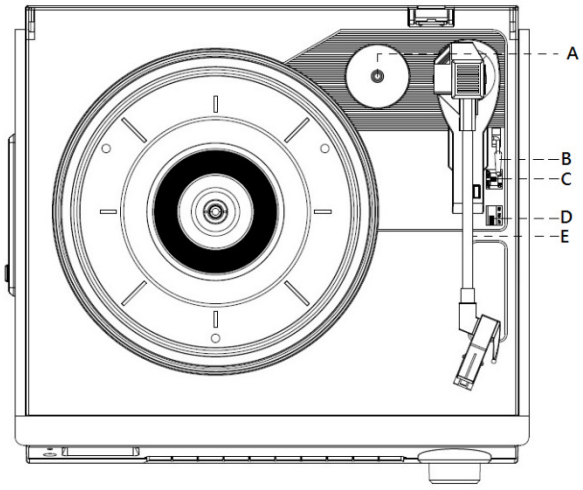

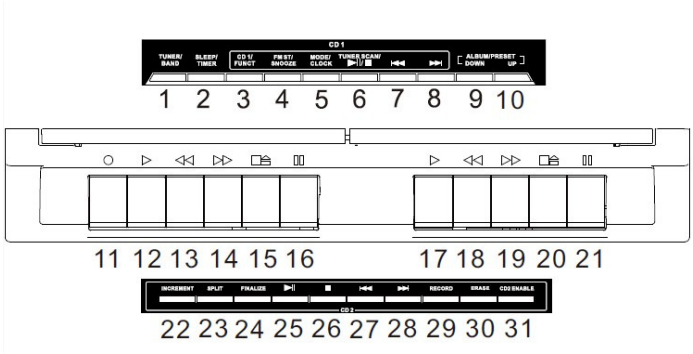

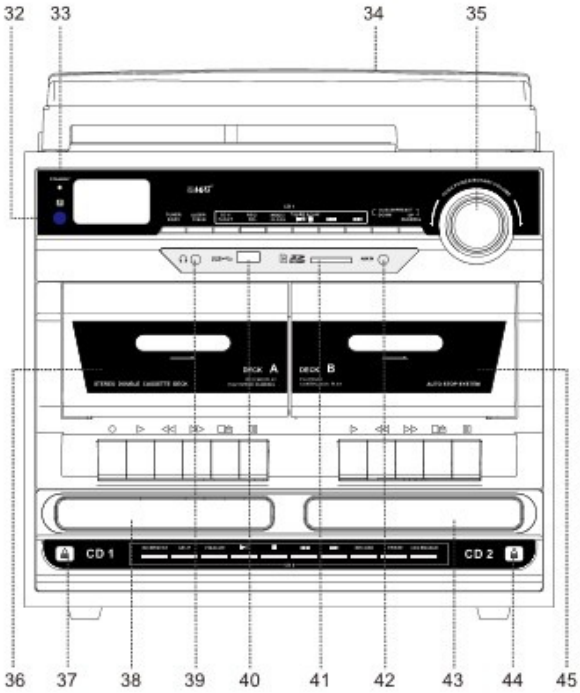

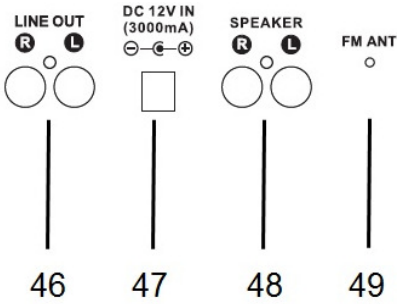

A) 45 RPM ADAPTOR

B) LIFT LEVER (FOR RECORD PLAY / PAUSE)

C) AUTO STOP ON/OFF BUTTON

D) 33/45/78 RPM SPEED SELECTOR

E) TONE ARM

1) TUNER / BAND

2) SLEEP / TIMER

3) FUNCT

4) REC / DEL

5) MODE / CLOCK

6) CD 1 - PLAY/PAUSE▶II BUTTON & TUNER SCAN

7) CD 1 - SKIP DOWN|◀◀ BUTTON

8) CD 1 - SKIP UP▶▶| BUTTON

9) ALBUM / PRESET DOWN

10) ALBUM / PRESET UP

11) CASSETTE DECK A – RECORD

12) CASSETTE DECK A – PLAY

13) CASSETTE DECK A – FAST REWIND

14) CASSETTE DECK A – FAST FORWARD

15) CASSETTE DECK A – STOP / EJECT

16) CASSETTE DECK A – PAUSE

17) CASSETTE DECK B – PLAY

18) CASSETTE DECK B – FAST REWIND

19) CASSETTE DECK B – FAST FORWARD

20) CASSETTE DECK B – STOP / EJECT

21) CASSETTE DECK B – PAUSE

22) CD 2 - INCREMENT

23) CD 2 - SPLIT

24) CD 2 - FINALIZE

25) CD 2 - PLAY/PAUSE▶II BUTTON

26) CD 2 - STOP■ BUTTON

27) CD 2 - SKIP DOWN|◀◀ BUTTON

28) CD 2 - SKIP UP▶▶| BUTTON

29) CD 2 - RECORD

30) CD 2 - ERASE

31) CD 2 – ENABLE

32) REMOTE CONTROL RECEIVER

33) STANDBY INDICATOR

34) DUST COVER
35) POWER / VOLUME KNOB
36) CASSETTE DECK A DOOR
37) CD 1 – OPEN / CLOSE BUTTON
38) CD 1 – CD DOOR
39) EARPHONE JACK
40) USB SLOT
41) SD SLOT
42) AUX IN JACK
43) CD 2 – CD DOOR
44) CD 2 - OPEN / CLOSE BUTTON
45) CASSETTE DECK B DOOR
46) LINE-OUT RCA JACK
47) EXTNERAL POWER ADAPTOR JACK
48) SPEAKER BOX CONNECTION RCA JACK
49) FM WIRE ANTENNA

CAUTION:

- USAGE OF CONTROLS OR ADJUSTMENTS OR PERFORMANCE OF PROCEDURES OTHER THAN THOSE SPECIFIED HEREIN MAY RESULT IN HAZARDOUS RADIATION EXPOSURE.
- THIS UNIT SHOULD NOT BE ADJUSTED OR REPAIRED BY ANYONE EXCEPT QUALIFIED SERVICE PERSONNEL.
- IF YOU FIND ANY MALFUNCTION OR FREZZING OF THE UNIT DURING OPERATION, PLEASE TRY TO UNPLUG THE UNIT AND WAIT FOR 10 SECONDS. THEN PLUG THE UNIT AND RESTART AGAIN

WARNING:

- THE APPARATUS SHALL NOT BE EXPOSED TO DRIPPING OR SPLASHING AND THAT NO OBJECTS FILLED WITH LIQUIDS, SUCH AS VASES, SHALL BE PLACED ON THE APPARATUS.
- BATTERIES (BATTERY PACK OR BATTERIES INSTALLED) SHALL NOT BE EXPOSED TO EXCESSIVE HEAT SUCH AS SUNSHINE, FIRE OR THE LIKE.

PRECAUTIONS FOR USE

INSTALLATION

- UNPACK ALL PARTS AND REMOVE PROTECTIVE MATERIAL.
- DO NOT CONNECT THE UNIT TO THE MAINS BEFORE CHECKING THE MAINS VOLTAGE AND BEFORE ALL OTHER CONNECTIONS HAVE BEEN MADE.
- DO NOT COVER ANY VENTS AND MAKE SURE THAT THERE IS A SPACE OF SEVERAL CENTIMETERS AROUND THE UNIT FOR VENTILATION.

CONNECTION

1. CONNECT SPEAKER BOX WITH **SPEAKER BOX RCA JACK**
2. PLUG THE EXTERNAL POWER ADAPTOR WITH THE **EXTERNAL POWER ADAPTOR JACK.**
3. PUSH THE **POWER KNOB** TO SWITCH ON THE UNIT, **STANDBY INDICATOR** WILL BE OFF.

SETTING THE CLOCK

1 WHEN THE **STANDBY INDICATOR** LIGHTS UP, THE UNIT IS IN THE STANDBY MODE.

2 DURING STANDBY MODE, SELECT BETWEEN 12H OR 24H CLOCK OPTIONS:

3 PRESS AND HOLD **MODE BUTTON** FOR 3-5 SECONDS; 12H / 24H WILL BE FLASHING. PRESS **CD 1 - SKIP DOWN⏮ BUTTON** OR **CD 1 - SKIP UP⏭ BUTTON** TO SELECT 12H / 24H MODE. PRESS **MODE BUTTON** AGAIN TO CONFIRM.

4 SETTING HOUR: PRESS **CD 1 - SKIP DOWN⏮ BUTTON** OR **CD 1 - SKIP UP⏭ BUTTON** TO SELECT THE CORRECT HOUR. PRESS **MODE BUTTON** AGAIN TO CONFIRM.

5 SETTING MINUTE: AFTER STEPS 2 & 3 ARE COMPLETED, PRESS **CD 1 - SKIP DOWN⏮ BUTTON** OR **CD 1 - SKIP UP⏭ BUTTON** TO SELECT CORRECT MINUTE. PRESS **MODE BUTTON** AGAIN TO CONFIRM.

SETTING ALARM

1. DURING STANDBY MODE, HOLD **TIMER BUTTON** FOR 3-5 SECONDS. SETTING THE ALARM SEQUENCE IS "ALARM ON TIME > ALARM OFF TIME > ALARM MODE > ALARM VOLUME".

2. SETTING ALARM ON TIME: "ON" IS ILLUMINATED ON THE DISPLAY
   i. SETTING HOUR: PRESS **CD 1 - SKIP DOWN⏮ BUTTON** OR **CD 1 - SKIP UP⏭ BUTTON** TO SELECT THE CORRECT HOUR, THEN PRESS **TIMER BUTTON** AGAIN TO CONFIRM.
   ii. SETTING MINUTE: PRESS **CD 1 - SKIP DOWN⏮ BUTTON** OR **CD 1 - SKIP UP⏭ BUTTON** TO SELECT THE CORRECT MINUTE, THEN PRESS **TIMER BUTTON** AGAIN TO CONFIRM

3. SETTING ALARM OFF TIME: "OFF" IS ILLUMINATED ON THE DISPLAY:
   i. SETTING HOUR: PRESS **CD 1 - SKIP DOWN⏮ BUTTON** OR **CD 1 - SKIP UP⏭ BUTTON** TO SELECT THE CORRECT HOUR, THEN PRESS **TIMER BUTTON** AGAIN TO CONFIRM.
   ii. SETTING MINUTE: PRESS **CD 1 - SKIP DOWN⏮ BUTTON** OR **CD 1 - SKIP UP⏭ BUTTON** TO SELECT THE CORRECT MINUTE, THEN PRESS **TIMER BUTTON** AGAIN TO CONFIRM.

4. SETTING ALARM MODE: "TUNE", "CD-1", "USB" OR "CARD" IS ILLUMINATED ON THE DISPLAY:
   i. PRESS **CD 1 - SKIP DOWN⏮ BUTTON OR CD 1 - SKIP UP⏭ BUTTON** TO SELECT THE ALARM MODE, THEN PRESS **TIMER BUTTON** AGAIN TO CONFIRM.
   ii. "TUNE", "CD-1", "USB" OR "CARD" (=SD CARD) ARE AVAILABLE FOR ALARM MODE SELECTION.

5. SETTING ALARM VOLUME: "V - " IS ILLUMINATED ON THE DISPLAY:

i. PRESS **CD 1 - SKIP DOWN⏮ BUTTON OR CD 1 - SKIP UP⏭ BUTTON** TO SELECT THE ALARM VOLUME, THEN PRESS **TIMER BUTTON** AGAIN TO CONFIRM.

6. WHEN SETTING THE ALARM IS COMPLETE, THE DISPLAY WILL SHOW THE SETTING AGAIN FOR CLARIFICATION.

7. "CLOCK" ICON WILL BE FLASHING WHEN ALARM IS IN ACTIVE. "CLOCK" ICON LIGHTS UP WHEN ALARM SETTING IS STORED BUT NOT IN ACTIVE YET.

8. CANCEL ALARM: DURING STANDBY MODE, WHEN "CLOCK" ICON IS ON, PRESS **TIMER BUTTON**, "CLOCK" ICON WILL TURN OFF.

TIMER FUNCTION

1. PUSH THE POWER KNOB UNTIL THE STANDBY INDICATOR LIGHT IS OFF.
2. WHEN THE UNIT IS TURNED ON, PRESS SLEEP BUTTON REPEATEDLY TO CHOOSE THE DESIRED SLEEP TIME MINUTES FROM 90>80>70…..>10 OFF.
3. SLEEP TIME SETTING IS STORED WHEN THE "SLEEP" ICON LIGHTS UP ON THE DISPLAY.

BLUETOOTH CONNECTION

- PRESS AND HOLD **FUNCTION** BUTTON TILL LCD SHOWS "BT", THEN THE UNIT IS READY FOR CONNECTION WITH YOUR BLUETOOH DEVICE (SUCH AS MOBILE PHONE).
- SWITCH ON THE BLUETOOTH FUNCTION OF YOUR BLUETOOH DEVICE, AND SELECT "ODCR2110 WD" BLUETOOTH EQUIPMENT FOR CONNECTION.
- AFTER YOUR BLUETOOH DEVICE IS CONNECTED WITH THE UNIT VIA BLUETOOTH, START TO PLAYBACK YOUR DEVICE.
- THIS UNIT HAS NFC FUNCTION WHICH CAN ALLOW YOUR BLUETOOH DEVICE (SUCH AS MOBILE PHONE) CONNECTING WITH THE UNIT AUTOMATICALLY.
  - SWITCH ON THE BLUETOOTH AND NFC FUNCTION OF YOUR DEVICE, THEN PUT IT NEAR THE "BT/N" LOGO WITHIN 5MM ON THE FRONT PANEL. YOUR DEVICE CAN AUTOMATICALLY SEACH AND CONNECT WITH THE UNIT.
  - TO DISCONNECT WITH THE UNIT, PUT YOUR DEVICE NEAR THE "BT/N" LOGO WITHIN 5MM ON THE FRONT PANEL AGAIN.

LISTENING TO RADIO & RECORDING TO USB/SD

NOTE: IT IS RECOMMENDED THAT A 4GB MEMORY STICK IS USED WHEN RECORDING TO USB

RADIO TUNING

1. PRESS **TUNER** / **BAND BUTTON**, SELECT AM OR FM BAND BY PRESSING **TUNER** / **BAND BUTTON** AGAIN.
2. TUNE TO THE REQUIRED STATION BY PRESSING **CD 1 - SKIP DOWN⏮ BUTTON OR CD 1 - SKIP UP⏭ BUTTON** FOR 1-2 SECONDS, AND THEN RELEASE.

3. THE UNIT WILL START SEEKING AUTOMATICALLY AND STOP WHEN A RADIO STATION IS FOUND.

MANUAL PRESET RADIO STATIONS

1. WHEN THE DESIRED RADIO STATION IS FOUND, PRESS **MODE BUTTON**, PROGRAM NUMBER WILL BE FLASHING.
2. PRESS **PRESET UP OR PRESET DOWN BUTTON** TO CHOOSE THE PROGRAM NUMBER FOR STORING THE DESIRED RADIO STATION.
3. PRESS **MODE BUTTON** AGAIN TO CONFIRM, PROGRAM NUMBER WILL STOP TO FLASH.
4. REPEAT STEP 2 & 3 UNTIL ALL DESIRED RADIO STATIONS ARE FOUND AND STORED
5. PRESS **PRESET UP OR PRESET DOWN BUTTON** TO CHOOSE THE PRESET RADIO STATIONS.

FM & FM-STEREO RADIO RECORDING TO USB/SD

1. PRESS **FUNCT BUTTON** TO SELECT "TUNE" MODE AND SELECT THE DESIRED BAND BY **TUNER** / **BAND BUTTON** (AM OR FM).
2. INSERT MEMORY DEVICE (USB DRIVE, SD OR MMC CARD)
3. PRESS THE **REC BUTTON**; IT WILL TAKE 3-5 SECONDS TO READ MEMORY DEVICE. THEN USB OR SD ICON WILL BE FLASHING.
4. PRESS **CD 1 - SKIP UP ⏭** OR **CD 1 - SKIP DOWN ⏮ BUTTON** TO SELECT DESIRED MODE (USB OR SD) FOR ENCODING. THEN PRESS **REC BUTTON** AGAIN TO CONFIRM. AND THE SYSTEM IS STARTING THE ENCODING MODE AFTER FEW SECONDS.
5. IF ONLY USB DRIVE, SD OR MMC CARD IS INSERTED, STEP 4 CAN BE SKIPPED.
6. THE USB OR SD ICON WILL BE FLASHING ON THE DISPLAY DURING ENCODING.
7. TO FINISH RECORDING, PRESS **REC BUTTON** AGAIN AND DISPLAY WILL SHOW "END" AND RETURN TO TUNER MODE.

PHONO & RECORDING TO USB/SD

NOTED:

- REMOVE THE STYLUS PROTECTOR.
- BE SURE THAT THE TONE ARM IS DETACHED FROM THE TONE ARM REST BEFORE OPERATING AND RE-SECURED AGAIN AFTERWARDS.

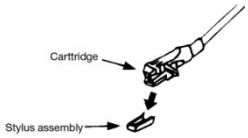

1. REPEATEDLY PRESS **FUNCT BUTTON** TO SELECT "PHON" ON DISPLAY.
2. SET THE **SPEED SELECTOR** TO THE PROPER POSITION DEPENDING ON THE RECORD TO BE PLAYED.
3. PLACE THE RECORD ON THE PLATTER USING THE **45 RPM ADAPTOR** IF REQUIRED.
4. PUSH THE **LIFT LEVER** UPWARD TO RAISE THE TONE ARM FROM THE ARM PARK, AND THEN SLOWLY MOVE IT TO THE RECORD SIDE. THE PLATTER WILL START TO ROTATE.

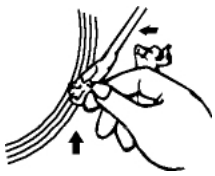

5. PUT DOWN THE **LIFT LEVER** TO DROP THE TONE ARM ON TO THE RECORD - THE VINYL RECORD WILL NOW PLAY.

6. ONCE YOU HAVE FINISHED LISTENING TO YOUR RECORD YOU CAN RETURN THE ARM TO THE REST EITHER USING THE LIFT LEVER OR MANUALLY.
7. IF YOU FIND YOUR RECORD STOPS PLAYING OR RECORDING HALF WAY THROUGH YOU WILL NEED TO TURN OFF THE AUTO STOP FEATURE. THE SWITCH IS LOCATED NEXT TO THE SPEED ADJUSTMENT SWITCH ON THE RECORD PLAYER DECK.

PHONO RECORDING TO USB/SD

1. PRESS **FUNCT BUTTON** TO SELECT "PHON" ON DISPLAY AND THEN INSERT MEMORY DEVICE (USB DRIVE, SD OR MMC CARD).

2. PRESS THE **REC BUTTON**; IT WILL TAKE **5 SECONDS** TO READ MEMORY DEVICE. THEN USB OR SD ICON WILL BE FLASHING ON THE DISPLAY

3. PRESS **CD 1 - SKIP DOWN⏮ BUTTON OR CD 1 - SKIP UP⏭ BUTTON** TO SELECT DESIRED MODE (USB OR SD) FOR RECORDING. THEN PRESS **REC BUTTON** AGAIN TO CONFIRM

4. IF ONLY USB DRIVE OR SD/MMC CARD IS INSERTED, STEP 3 CAN BE SKIPPED.

5. DISPLAY WITH SHOW "WAI" AND THEN USB OR SD ICON WILL BE FLASHING, WHICH MEANS THE SYSTEM STARTS RECORDING.

7. NOW LOWER YOUR RECORD ARM TO START PLAYING- YOU ARE NOW RECORDING

6. TO FINISH RECORDING, PRESS **REC BUTTON** AGAIN AND DISPLAY WILL SHOW "END" AND RETURN TO PHONO MODE.

CASSETTE TAPE & RECORDING

STOP / **EJECT:** PRESS TO STOP ALL DECK OPERATION. PRESS AGAIN TO OPEN THE CASSETTE DOOR.

FAST FORWARD: PRESS TO START, FAST FORWARD WINDING THE TAPE.

FAST REWIND: PRESS TO START, FAST REWIND WINDING THE TAPE.

PLAY: PRESS TO START PLAYING TAPE.

PAUSE: PRESS TO STOP TAPE OPERATION TEMPORARILY. PRESS AGAIN TO RESUME PLAYBACK.

RECORD: PRESS TOGETHER WITH **PLAY BUTTON** TO START TAPE RECORDING. (DECK A ONLY).

PLAYBACK

- PRESS **FUNCT BUTTON** TO SELECT "TAPE" ON DISPLAY.
- PUT IN CASSETTE TAPE.
- PRESS **PLAY BUTTON** ON CASSETTE DECK TO START PLAYBACK.
- USE **PAUSE BUTTON** WHEN YOU WANT TO STOP PLACKBACK TEMPORARILY.
- PRESS **STOP** / **EJECT BUTTON** WHEN FINISHED.

RECORDING

A.RECORDING FROM TAPE (DECK B TO DECK A)

THIS UNIT ENABLE YOU TO DUPLICATE A PRE-RECORDED TAPE TO ANOTHER TAPE. IT IS PERFORMED ONLY WAY FROM DECK B (PLAYBACK) TO DECK A (PLAYBACK).

1. NORMAL SPEED RECORDING

- SELECT "TAPE" FUNCTION.
- INSERT A PRE-RECORDED CASSETTE INTO DECK B AND A BLANK CASSETTE TAPE INTO DECK A.
- PRESS **RECORD** AND **PLAY BUTTON** AT DECK A, THEN PRESS PLAY BUTTON TO START PLAYBACK AT DECK B, CASSETTE RECORDING FROM DECK B TO DECK A IS IN PROCESS.

2. HIGH SPEED RECORDING

- THIS UNIT CAN RECORD FROM DECK B TO DECK A WITH A HIGH SPEED TO SAVE THE TIME BY AROUND 2/3 COMPARED WITH NORMAL SPEED.
- PRESS **ALBUM/PRESET UP BUTTON** BEFORE RECORDING, DISPLAY WILL SHOW "DUBB", THEN FOLLOW THE SAME PROCEDURES AS DESCRIPED IN "NORMAL SPEED RECORDING".
- A CHATTING SOUND IS BEING HEARD DURNG HIGH SPEED RECORDING. TO AVOID THIS, SET THE VOLUME TO A MINIMUM LEVEL.
- DO NOT ACTIVAE / DE-ACTIVE THE **ALBUM/PRESET UP BUTTON** DURING HIGH SPEED RECORDING, THIS WILL VARY THE SPEED OF RECORDING AND MAY DAMAGE THE CASSETTE TAPE.

B.RECORDING FROM TURNTABLE / CD / AUX / RADIO / USB / SD

- PRESS **FUNCT BUTTON** TO SELECT THE DESIRED MODE (TURNTABLE / CD / AUX / RADIO / USB / SD).
- PRESS **RECORD** AND **PLAY BUTTON** AT DECK A, THEN SIGNEL FROM DESIRED MODE WILL BE RECORDED IN DECK A.

C.CASSETTE TAPE RECORDING TO USB/SD

1. PRESS FUNCT BUTTON TO SELECT "TAPE" ON DISPLAY AND THEN INSERT MEMORY DEVICE (USB DRIVE, SD OR MMC CARD).
2. PRESS THE REC BUTTON; IT WILL TAKE 5 SECONDS TO READ MEMORY DEVICE. THEN USB OR SD ICON WILL BE FLASHING.
3. PRESS CD 1 - SKIP DOWN⏮ BUTTON OR CD 1 - SKIP UP⏭ BUTTON TO SELECT DESIRED MODE (USB OR SD) FOR RECORDING. THEN PRESS REC BUTTON AGAIN TO CONFIRM.
4. IF ONLY USB DRIVE OR SD/MMC CARD IS INSERTED, STEP 3 CAN BE SKIPPED.
5. DISPLAY WITH SHOW "WAI" AND THEN USB OR SD ICON WILL BE FLASHING, WHICH MEANS THE SYSTEM HAS STARTED RECORDING.
6. TO FINISH RECORDING, PRESS REC BUTTON AGAIN AND DISPLAY WILL SHOW "END" AND RETURN TO TAPE MODE.

AUX IN JACK & RECORDING TO USB/SD

PRESS **FUNCT BUTTON** TO SELECT "AUX" ON DISPLAY, AND THEN CONNECT THE EXTERNAL AUDIO DEVICE (SUCH AS CD PLAYER) THROUGH THE **AUX IN JACK**. AUDIO SIGNAL FROM THE EXTERNAL AUDIO DEVICE CAN BE PLAYED THROUGH THE SYSTEM.

AUX IN RECORDING TO USB/SD

1. PRESS **FUNCT BUTTON** TO SELECT "AUX" ON DISPLAY, AND THEN INSERT MEMORY DEVICE (USB DRIVE, SD OR MMC CARD)
2. PRESS THE **REC BUTTON**; IT WILL TAKE 5 SECONDS TO READ MEMORY DEVICE. THEN USB OR SD ICON WILL BE FLASHING.
3. PRESS **CD 1 - SKIP DOWN⏮ BUTTON OR CD 1 - SKIP UP⏭ BUTTON** TO SELECT DESIRED MODE (USB OR SD) FOR RECORDING. THEN PRESS **REC BUTTON** AGAIN TO CONFIRM.
4. IF ONLY USB DRIVE OR SD/MMC CARD IS INSERTED, STEP 3 CAN BE SKIPPED.
5. DISPLAY WITH SHOW "WAI" AND THEN USB OR SD ICON WILL BE FLASHING, WHICH MEANS THE SYSTEM HAS STARTED RECORDING.
6. TO FINISH RECORDING, PRESS **REC BUTTON** AGAIN AND DISPLAY WILL SHOW "END" AND RETURN TO AUX IN MODE.

PLAYBACK OF MP3/WMA MUSIC VIA USB STORAGE MEDIA OR MEMORY CARD

CONNECTING

THE SYSTEM IS ABLE TO DECODE AND PLAYBACK ALL MP3 / WMA FILES WHICH ARE STORED IN THE MEMORY MEDIA USB CONNECTING PORT OR ON SD/MMC MEMORY CARD.

1. PLUG-IN THE USB STICK OR MEMORY MEDIA CARD
2. PRESS **FUNCT BUTTON** TO SELECT "USB" OR "CARD" ON DISPLAY
3. THE SYSTEM WILL START READING THE STORAGE MEDIA AUTOMATICALLY AFTER THE FUNCTION IS SELECTED, AND THE DISPLAY WILL SHOW THE TOTAL NUMBER OF MP3/WMA FILES (E.G. 016).
4. THEN THE SYSTEM WILL START AUDIO PLAYBACK FROM THE DESIRED DEVICE (USB OR SD/MMC) AUTOMATICALLY.

- **PLAY / PAUSE BUTTON ▶II**

- PRESS **CD 1 - PLAY/PAUSE▶II BUTTON** ONCE TO HALT PLAYING, PRESS IT AGAIN TO CONTINUE.

- **STOP FUNCTION**

- PRESS AND HOLD **CD 1 - PLAY/PAUSE▶II BUTTON** FOR 3-5 SECONDS TO END UP AUDIO PLAYBACK, THEN DISPLAY WILL SHOW THE TOTAL NUMBER OF MP3/WMA FILES. AND THEN USER CAN PRESS **CD 1 - SKIP DOWN⏮ BUTTON OR CD 1 - SKIP UP⏭ BUTTON** TO SELECT FILE FORWARD OR BACKWARD.

- **SKIP UP ▶▶I / SKIP DOWN I◀◀ BUTTON**

- DURING MP3/WMA PLAYBACK, PRESS **CD 1 - SKIP UP ▶▶I BUTTON** ONCE TO PLAY THE NEXT FILE. PRESS AND HOLD **CD 1 - SKIP UP ▶▶I BUTTON** CONTINUOUSLY TO SPEED UP SELECTING FORWARD.
- DURING MP3/WMA PLAYBACK, PRESS **CD 1 - SKIP DOWN BUTTON I◀◀** ONCE TO PLAY THE PREVIOUS FILE. PRESS AND HOLD **CD 1 - SKIP DOWN BUTTON** CONTINUOUSLY TO INCREASE THE BACKWARD DIRECTION SPEED.

- **FOLDER SEARCHING**

  PRESS **ALBUM DOWN** OR **ALBUM UP BUTTON** TO SEARCH FOLDER BACKWARD OR FORWARD.

- **REPEAT FUNCTION**

  DURING AUDIO PLAYBACK, PRESS **MODE BUTTON** ONCE, SINGLE TRACK WILL BE PLAYED REPEATEDLY. PRESS **MODE BUTTON** AGAIN, IT WILL REPEATEDLY PLAY ALL TRACKS IN THE WHOLE USB DRIVE, SD OR MMC CARD.

REMARK

- WHEN CONNECTING AN MP3 PLAYER TO THE SYSTEM PLEASE BE AWARE THAT NOT ALL CODING WILL BE COMPATIBLE WITH THIS SYSTEM. THIS IS NOT A SYSTEM MALFUNCTION- IT IS A COMPATIBILITY ISSUE
- THERE ARE NUMEROUS USB AND SD DEVICE PRODUCERS AND FORMAT CAN VARY. THEREFORE, WE DO NOT GUARANTEE THIS UNIT CAN SUPPORT ALL USB AND SD DEVICES FROM EVERY BRAND.
- SD CARDS CAN BE SUPPORTED UP TO 8GB CAPACITY

TRACK PROGRAMMING

SET THE SYSTEM AT STOP FUNCTION BEFORE PROGRAMMING:

1. SET TO “USB” OR “CARD” FUNCTION. AFTER THE SYSTEM READING THE USB OR SD DEVICE, PRESS AND HOLD **CD 1 - PLAY/PAUSE▶II BUTTON** FOR 3-5 SECONDS TO END AUDIO PLAYBACK, THEN DISPLAY WILL SHOW THE TOTAL NUMBER OF MP3/WMA FILES.
2. PRESS **MODE BUTTON**, “MEM” WILL BE FLASHING ON LCD DISPLAY. IT WILL INDICATE PROGRAM NO. AND DIGITS FOR TRACK NO. TO BE PROGRAMMED.
3. SELECT A DESIRED TRACK BY PRESSING **CD 1 - SKIP DOWNI◀◀ BUTTON OR CD 1 - SKIP UP▶▶I BUTTON**. IF A FOLDER SELECTION IS REQUIRED, PRESSING **ALBUM DOWN OR ALBUM UP BUTTON** TO SEARCH FOLDER BACKWARD OR FORWARD.
4. PRESS **MODE BUTTON** TO CONFIRM AND STORE THE TRACK INTO THE MEMORY.
5. REPEAT STEPS 3 AND 4 TO ENTER ADDITIONAL TRACKS INTO THE MEMORY IF NECESSARY.
6. WHEN ALL THE DESIRED TRACKS HAVE BEEN PROGRAMMED, PRESS **CD 1 - PLAY/PAUSE▶II BUTTON** TO PLAY THE TRACKS IN ASSIGNED ORDER.
7. PRESS AND HOLD **CD 1 - PLAY/PAUSE▶II BUTTON** FOR 3-5 SECONDS TO STOP PLAYING OF PROGRAMMED TRACKS, PRESS AND HOLD **CD 1 - PLAY/PAUSE▶II BUTTON** FOR 3-5 SECONDS AGAIN

TO CANCEL PROGRAMMING, THEN “MEM” WILL DISAPPEAR IN THE DISPLAY.

COPYING OF MP3/WMA FILE

THE SYSTEM ALLOWS YOU TO COPY THE FILE FROM USB TO SD OR SD TO USB BY 1 FILE, 1 FOLDER OR ALL FILES.

I) COPY 1 TRACK

1. INSERT THE USB STORAGE MEDIA OR SD/MMC CARD, SET TO “USB” OR “CARD” MODE.
2. PRESS **REC BUTTON** DURING PLAYBACK OF THE COPYING TRACK, THEN “ONE” WILL BE FLASHING ON THE DISPLAY. PRESS **REC BUTTON** AGAIN TO CONFIRM.
3. THE USB OR SD ICON WILL BE FLASHING ON THE DISPLAY.
4. AFTER COMPLETION OF COPY, UNIT WILL STOP PLAYBACK AUTOMATICALLY.
5. DISPLAY WILL SHOW “END” AND BACK TO USB OR SD MODE.

II) COPY 1 FOLDER

1. INSERT THE USB STORAGE MEDIA OR SD/MMC CARD, SET IN “USB” OR “CARD” MODE. PRESS AND HOLD **CD 1 - PLAY/PAUSE▶II BUTTON** FOR 3-5 SECONDS

THEN DISPLAY WILL SHOW THE TOTAL NUMBER OF MP3/WMA FILES.

2. PRESS **ALBUM DOWN OR ALBUM UP BUTTON** TO SEARCH DESIRED FOLDER FOR COPYING.

3. PRESS **REC BUTTON**, THEN “ONE” WILL BE FLASHING ON THE DISPLAY. PRESS **CD 1 - SKIP DOWN|◀◀ BUTTON OR CD 1 - SKIP UP▶▶| BUTTON** TO SELECT “DIR” ON THE DISPLAY.

PRESS **REC BUTTON** AGAIN TO CONFIRM.

4. USB OR SD ICON WILL BE FLASHING ON THE DISPLAY.

5. WHEN THE USB OR SD ICON STOPS FLASHING, IT MEANS THAT THE FOLDER COPYING IS COMPLETED.

III) COPY ALL TRACK

1. INSERT THE USB STORAGE MEDIA OR SD/MMC CARD, SET IN “USB” OR “CARD” MODE. PRESS AND HOLD **CD 1 - PLAY/PAUSE▶II BUTTON** FOR 3-5 SECONDS TO END UP AUDIO PLAYBACK, THEN DISPLAY WILL SHOW THE TOTAL NUMBER OF MP3/WMA FILES.

2. PRESS **REC BUTTON**, THEN “ONE” WILL BE FLASHING ON THE DISPLAY. PRESS **CD 1 - SKIP DOWN|◀◀ BUTTON OR CD 1 - SKIP UP▶▶| BUTTON** TO SELECT “ALL” ON THE DISPLAY. PRESS **REC BUTTON** AGAIN TO CONFIRM.

3. USB OR SD ICON WILL BE FLASHING ON THE DISPLAY. COPYING IS PERFORMED NOW.

4. WHEN THE USB OR SD ICON WILL STOP FLASHING, IT MEANS THAT ALL TRACK COPYING IS COMPLETED.

REMARK:

- IF PRESS THE **REC BUTTON** DURING PLAYBACK OF USB OR SD MODE, THE FILE WILL COPY FROM USB TO SD OR SD TO USB.

- NOTE: DISPLAY WILL SHOW SCEr IF ANY PARTICULAR TRACK IS ENCRYPTED BY THE SONG PRODUCER WHO DOES NOT ALLOW DIGITAL COPYING TO USB/SD.

FILE DELETE FROM USB / SD CARD

THE SYSTEM IS ABLE TO ERASE THE FILES STORED INSIDE THE USB DRIVE OR SD CARD BY FOLLOWING:-

I) DELETE 1 TRACK

1. PRESS AND HOLD **DEL BUTTON** FOR 3-5 SECONDS DURING THE PLAYBACK OF THE DESIRED TRACK, THEN "ONE" WILL BE FLASHING ON THE DISPLAY. PRESS **DEL BUTTON** AGAIN TO CONFIRM.
2. "DEL" WILL BE SHOWN ON THE DISPLAY.
3. "DEL" WILL DISAPPEAR ON THE DISPLAY; IT MEANS THE TRACK IS DELETED.

II) DELETE 1 FOLDER

1. INSERT THE USB STORAGE MEDIA OR SD/MMC CARD, SET IN "USB" OR "CARD" MODE. PRESS AND HOLD **CD 1 - PLAY/PAUSE▶II BUTTON** FOR 3-5 SECONDS TO STOP AUDIO PLAYBACK, THEN DISPLAY WILL SHOW THE TOTAL NUMBER OF MP3/WMA FILES.
2. PRESS **ALBUM DOWN OR ALBUM UP BUTTON** TO SEARCH DESIRED FOLDER FOR DELETING.
3. PRESS AND HOLD **DEL BUTTON** FOR 3-5 SECONDS, "DEL" WILL SHOW ON THE DISPLAY. PRESS **CD 1 - SKIP DOWN|◀◀ BUTTON OR CD 1 - SKIP UP▶▶| BUTTON** TO SELECT "DIR" ON THE DISPLAY. PRESS **DEL BUTTON** AGAIN TO CONFIRM.
4. "DEL" WILL IS SHOWN ON THE DISPLAY. AFTER "DEL" DISAPPEARS IT MEANS THE DESIRED FOLDER IS DELETED.

II) DELETE ALL TRACKS

1. INSERT THE USB STORAGE MEDIA OR SD/MMC CARD, SET IN "USB" OR "CARD" MODE. PRESS AND HOLD **CD 1 - PLAY/PAUSE▶II BUTTON** FOR 3-5 SECONDS TO STOP AUDIO PLAYBACK, THEN DISPLAY WILL SHOW THE TOTAL NUMBER OF MP3/WMA FILES.
2. PRESS AND HOLD **DEL BUTTON** FOR 3-5 SECONDS, THEN "ONE" WLL BE FLASHING ON THE DISPLAY. PRESS **CD 1 - SKIP DOWN|◀◀ BUTTON OR CD 1 - SKIP UP▶▶| BUTTON** TO SELECT "ALL" ON THE DISPLAY. PRESS **DEL BUTTON** AGAIN TO CONFIRM.
3. USB OR SD ICON WILL BE FLASHING ON THE DISPLAY. WHILST DELETING IS PERFORMING.
4. WHEN THE USB OR SD ICON STOPS FLASHING, IT MEANS THAT ALL TRACK DELETIONS ARE COMPLETE.

COMPACT DISC (CD) PLAYBACK & RECORDING TO USB/SD

1. THE SYSTEM IS EQUIPPED WITH 2 CD PLAYERS (CD 1 & CD 2). CD 1 IS A NORMAL CD PLAYER WHICH CAN PLAY CD, CD-R, CD-RW AND MP3 FORMAT. CD 2 IS A CD RECORDER; THIS FUNCTION WILL BE DESCRIBED IN A LATER PART OF THIS MANUAL.

2. FOR CD PLAYBACK, PRESS **FUNCT BUTTON** TO "CD" MODE.

3. PRESS **CD 1 - CD DOOR BUTTON**, CD DOOR WILL BE OPENED, PUT THE CD IN THE TRAY AND PRESS **CD 1 - CD DOOR BUTTON** AGAIN, CD DOOR WILL BE CLOSED.

4. THE SYSTEM WILL START READING THE CD AND AUDIO PLAYBACK.

- **PLAY / PAUSE BUTTON ▶II**

- PRESS **CD 1 - PLAY/PAUSE▶II BUTTON** ONCE TO HALT PLAYING, PRESS IT AGAIN TO CONTINUE.

- **STOP FUNCTION**

- PRESS AND HOLD **CD 1 - PLAY/PAUSE▶II BUTTON** FOR 3-5 SECONDS TO END UP AUDIO PLAYBACK, THEN DISPLAY WILL SHOW THE TOTAL NUMBER OF MP3/WMA FILES. AND THEN USER CAN PRESS **CD 1 - SKIP DOWN⏮ BUTTON OR CD 1 - SKIP UP⏭ BUTTON** TO SELECT FILE FORWARD OR BACKWARD.

- **SKIP UP ⏭ / SKIP DOWN ⏮ BUTTON**

- DURING MP3/WMA PLAYBACK, PRESS **CD 1 - SKIP UP ⏭ BUTTON** ONCE TO PLAY THE NEXT FILE. PRESS AND HOLD **CD 1 - SKIP UP ⏭ BUTTON** CONTINUOUSLY TO SPEED UP SELECTING FORWARD.
- DURING MP3/WMA PLAYBACK, PRESS **CD 1 - SKIP DOWN BUTTON ⏮** ONCE TO PLAY THE PREVIOUS FILE. PRESS AND HOLD **CD 1 - SKIP DOWN BUTTON** CONTINUOUSLY TO SPEED UP SELECTING BACKWARD.

- **REPEAT FUNCTION**

  DURING AUDIO PLAYBACK, PRESS **MODE BUTTON** ONCE, SINGLE TRACK WILL BE PLAYED REPEATEDLY. PRESS **MODE BUTTON** AGAIN, IT WILL REPEATEDLY PLAY ALL TRACKS IN THE WHOLE CD.

TRACKS PROGRAMMING

SET THE SYSTEM AT STOP FUNCTION BEFORE PROGRAMMING:

1. PRESS **FUNCT BUTTON** TO “CD” MODE. AFTER THE SYSTEM READS THE DISC, PRESS AND HOLD **CD 1 - PLAY/PAUSE▶II BUTTON** FOR 3-5 SECONDS TO STOP AUDIO PLAYBACK.
2. PRESS **MODE BUTTON**, “MEM” WILL BE FLASHING ON LCD DISPLAY. MOREOVER, IT WILL INDICATE PROGRAM NO. AND DIGITS FOR TRACK NO. TO BE PROGRAMMED.
3. SELECT A DESIRED TRACK BY PRESSING **CD 1 - SKIP DOWN⏮ BUTTON OR CD 1 - SKIP UP⏭ BUTTON**. IF FOLDER SELECTION IS REQUIRED, PRES **ALBUM DOWN OR ALBUM UP BUTTONS** TO SEARCH FOLDER BACKWARD OR FORWARD.
4. PRESS **MODE BUTTON** TO CONFIRM AND STORE THE TRACK INTO MEMORY.
5. REPEAT STEPS 3 AND 4 TO ENTER ADDITIONAL TRACKS INTO THE MEMORY IF NECESSARY.
6. WHEN ALL THE DESIRED TRACKS HAVE BEEN PROGRAMMED, PRESS **CD 1 - PLAY/PAUSE▶II BUTTON** TO PLAY THE TRACKS IN ASSIGNED ORDER.
7. PRESS AND HOLD **CD 1 - PLAY/PAUSE▶II BUTTON** FOR 3-5 SECONDS TO STOP PLAYING OF

PROGRAMMED TRACKS, PRESS AND HOLD **CD 1 - PLAY/PAUSE▶II BUTTON** FOR 3-5 SECONDS AGAIN TO CANCEL PROGRAMMING, THEN "MEM" WILL DISAPPEAR IN THE DISPLAY.

CD RECORDING TO USB/SD

THE SYSTEM ALLOWS YOU TO COPY THE TRACK FROM CD TO USB OR SD BY 1 TRACK, 1 FOLDER OR ALL FILES.

I) COPY 1 TRACK

1. INSERT THE USB STORAGE MEDIA OR SD/MMC CARD, PRESS **FUNCT BUTTON** TO "CD" MODE.
2. PRESS **REC BUTTON** DURING THE PLAYBACK OF THE COPYING TRACK FROM CD, THEN "ONE" WILL BE FLASHING ON THE DISPLAY. PRESS **REC BUTTON** AGAIN TO CONFIRM.
3. THE USB OR SD ICON WILL BE FLASHING ON THE DISPLAY. PRESS **CD 1 - SKIP DOWN|◀◀ BUTTON OR CD 1 - SKIP UP▶▶| BUTTON** TO SELECT DESIRED MODE (USB OR SD) FOR RECORDING. THEN PRESS **REC BUTTON** AGAIN TO CONFIRM.
4. IF ONLY USB DRIVE OR SD/MMC CARD IS INSERTED, STEP 3 CAN BE SKIPPED.
5. THE USB OR SD ICON WILL BE FLASHING ON THE DISPLAY DURING RECORDING. AFTER COMPLETING OF RECORDING, UNIT WILL STOP PLAYBACK AUTOMATICALLY.
6. DISPLAY WILL SHOW "END" AND BACK TO CD MODE.

II) COPY 1 FOLDER (FOR MP3/WMA DISC ONLY)

1. INSERT THE USB STORAGE MEDIA OR SD/MMC CARD, PRESS **FUNCT BUTTON** TO "CD" MODE. PRESS AND HOLD **CD 1 - PLAY/PAUSE▶II BUTTON** FOR 3-5 SECONDS TO STOP AUDIO PLAYBACK.
2. PRESS **ALBUM DOWN OR ALBUM UP BUTTON** TO SEARCH FOLDER FOR COPYING.
3. PRESS **REC BUTTON**, THEN "ONE" WILL BE FLASHING ON THE DISPLAY. PRESS **CD 1 - SKIP DOWN|◀◀ BUTTON OR CD 1 - SKIP UP▶▶| BUTTON** TO SELECT "DIR" ON THE DISPLAY. PRESS **REC BUTTON** AGAIN TO CONFIRM.
4. THE USB OR SD ICON WILL BE FLASHING ON THE DISPLAY. PRESS **CD 1 - SKIP DOWN|◀◀ BUTTON OR CD 1 - SKIP UP▶▶| BUTTON** TO SELECT DESIRED MODE (USB OR SD) FOR RECORDING. THEN PRESS **REC BUTTON** AGAIN TO CONFIRM.
5. IF ONLY USB DRIVE OR SD/MMC CARD IS INSERTED, STEP 4 CAN BE SKIPPED.
6. USB OR SD ICON WILL BE FLASHING ON THE DISPLAY. COPYING IS PERFORMING NOW.
7. WHEN THE USB OR SD ICON STOPS FLASHING, IT MEANS THAT THE FOLDER COPYING IS COMPLETED.

III) COPY ALL TRACK

1. INSERT THE USB STORAGE MEDIA OR SD/MMC CARD, PRESS **FUNCT BUTTON** TO "CD" MODE. PRESS AND HOLD **CD 1 - PLAY/PAUSE▶II BUTTON** FOR 3-5 SECONDS TO STOP AUDIO PLAYBACK.
2. PRESS **REC BUTTON**, THEN "ONE" WILL BE FLASHING ON THE DISPLAY. PRESS **CD 1 - SKIP DOWN|◀◀ BUTTON OR CD 1 - SKIP UP▶▶| BUTTON** TO SELECT "ALL" ON THE DISPLAY. PRESS **REC BUTTON** AGAIN TO CONFIRM.
3. THE USB OR SD ICON WILL BE FLASHING ON THE DISPLAY. PRESS **CD 1 - SKIP DOWN|◀◀ BUTTON OR CD**

1 - SKIP UP▶▶I BUTTON TO SELECT DESIRED MODE (USB OR SD) FOR RECORDING. THEN PRESS **REC BUTTON** AGAIN TO CONFIRM.

4. IF ONLY USB DRIVE OR SD/MMC CARD IS INSERTED, STEP 4 CAN BE SKIPPED.

5. USB OR SD ICON WILL BE FLASHING ON THE DISPLAY.

6. WHEN THE USB OR SD ICON STOPS FLASHING, IT MEANS THAT THE FOLDER COPYING IS COMPLETED.

NOTE: DISPLAY WILL SHOW SCEr IF ANY PARTICULAR TRACK IS ENCRYPTED BY THE SONG PRODUCER WHO DOES NOT ALLOW DIGITAL COPYING TO USB/SD.

SPLIT TRACK FUNCTION FOR USB/SD RECORDING FOR TURNTABLE/CASSETTE/AUX IN

1) **MANUAL SPLIT OPERATION PROCEDURE:** DURING USB/SD RECORDING, THE USB/SD ICON WILL FLASH ON THE DISPLAY. IF A NEW TRACK IS REQUIRED, PRESS **MODE** BUTTON ON THE UNIT OR REMOTE CONTROL, DISPLAY WILL SHOW "TS", THEN THE UNIT WILL STOP RECORDING MOMENTARILY AND RESUME AGAIN. A NEW FILE WILL HAVE BEEN CREATED ON THE USB/SD DEVICE REPRESNTING A NEW TRACK.

2) **AUTO SPLIT OPERATION PROCEDURE:**

- BEFORE USB/SD RECORDING, PRESS **FUNCT** BUTTON TO SELECT AUDIO SOURCE, THEN PRESS **MODE** BUTTON ON THE UNIT OR REMOTE CONTROL, DISPLAY WILL SHOW "T-ON", WHICH MEANS THE AUTO SPLIT FUNCTION HAS ACTIVATED. THEN START USB/SD RECORDING, THE UNIT CAN AUTOMATICALLY DETECT THE SILENT PART BETWEEN EACH TRACK, AND CREATE A NEW FILE TO MOVE ON TO START RECORDING THE NEXT TRACK.
- IF NOT REQUIRED: PRESS **MODE** BUTTON ON THE UNIT OR REMOTE CONTROL BEFORE USB/SD RECORDING, DISPLAY WILL SHOW "T-OF", WHICH MEANS AUTO SPLIT HAS BEEN DEACTIVATED.
- PLEASE NOTE FOR AUTO SPLIT: SEVERAL SECONDS OF THE BEGINNING OF THE NEXT TRACK MAY NOT BE RECORDED, AS THE UNIT MAY TAKE A FEW SECONDS TO CREATE A NEW FILE ON THE USB/SD; AND IT CAN ADDITIONALLY BE THE CASE THAT SOME MUSIC PRODUCERS INTENTIONALLY ADD SILENT SECTIONS WITHIN ONE TRACK. AS A RESULT, THIS WILL VERY LIKELY MAKE THE UNIT CONSIDER THIS SILENT PART AS THE BREAK BETWEEN TRACKS AND CREATE A NEW TRACK ON THE RECORDING.
- NOTE FOR AUTO SPLIT: DURING USB/SD RECORDING FROM TURNTABLE & CASSETTE, WHEN THE UNIT HAS DETECTED ANY PARTICULAR SILENT PART, THE TURNTABLE AND CASSETTE PLAYER WILL STOP MOMENTARILY. THE TURNTABLE AND CASSETTE PLAYER WILL RESUME OPERATION ONCE THE USB/SD DEVICE HAS BEGUN CREATING A NEW FILE TO BE RECORDED.

CD RECORDER FUNCTION (CD-2)

1. CD-2 IS A CD RECORDER AND IS MAINLY DESIGNED FOR RECORDING PURPOSE. AFTER RECORDING, THE RECORDED CD-R/RW CAN BE PLAYED IN CD-2, BUT IT IS ONLY USED FOR CHECKING THE CD-R/RW PURPOSE BEFORE FINALIZING. PLEASE NOTE THAT THE FIRST FEW SECONDS OF THE RECORDING MAY NOT BE PLAYED IN CD-2. WE RECOMMEND ONLY USING CD-1 FOR NORMAL CD PLAYBACK.

2. PLEASE NOTE:CD RECORDER (CD-2) REACTION TIME IS LONGER THAN A NORMAL CD PLAYER. IF YOU

KEEP PRESSING BUTTONS WHILE CD RECORDER IS OPERATING, YOU MIGHT CAUSE MALFUNCTION OF THE SYSTEM. PLEASE RE-START THE UNIT IF THIS HAPPENS. SO THIS IS NOT RECOMMENDED TO PRESS ANY UNNECESSARY BUTTON DURING CD RECORDING.

3. AFTER A BLANK CD-R/RW DISC IS PUT INTO CD-2. THE LCD DISPLAY WILL SHOW "NO TOC", WHICH MEANS THE DISC CAN BE RECORDED.

4. CD-R DISC CAN ONLY BE RECORDED ONCE, AND CANNOT BE ERASED AND FINALIZED.

5. MUSIC FROM CD, TURNTABLE, CASSETTE, AUX IN, USB AND SD CAN BE RECORDED TO CD BY CD-2:

CD / **USB** / **SD RECORDING TO CD**

1. PRESS **CD 2 – ENABLE** TO ACTIVATE THE CD RECORDER. DISPLAY WILL SHOW "CD-2".

2. PRESS **CD 2 - CD DOOR BUTTON**, CD DOOR WILL BE OPENED, PUT THE CD-R/RW IN THE TRAY AND PRESS **CD 2 - CD DOOR BUTTON** AGAIN TO CLOSE THE DOOR. DISPLAY WILL SHOW "BUSY" DURING READING CD-R/RW. AFTER FEW SECONDS, DISPLAY WILL SHOW THE TIME COUNTER.

3. PRESS **FUNCT BUTTON** TO SELECT MODE BETWEEN **CD** / **USB** / **SD** MODE FOR RECORDING SOURCE.

4. PRESS **CD – 2 RECORD BUTTON**, DISPLAY WILL SHOW "REC", IT MEANS THE SYSTEM HAS STARTED RECORDING TO CD. AND THE TRACK WILL START PLAYING FROM THE BEGINNING AGAIN.

6. **AUTO TRACK**: PRESSING **CD 2 – INCREMENT** BUTTON DURING RECORDING, THE DISPLAY WILL SHOW "A-TS", THEN THE SYSTEM WILL DETECT THE SILENT PART BETWEEN EACH TRACK DURING PLAYBACK AND CREATE A NEW CD TRACK FOR THE NEXT SESSION. PRESSING **CD 2 – INCREMENT** BUTTON AGAIN DURING RECORDING TO CANCEL **AUTO TRACK** FUNCTION, "A-TS" WILL NOT SHOW IN THE DISPLAY.

PLEASE NOTE FOR "AUTO TRACK": A CERTRAIN PART OF THE BEGINNING OF THE NEXT TRACK MAY NOT BE RECORDED, AS THE UNIT MAY TAKE A FEW SECONDS TO RE-START RECORDING TO CD; AND IT CAN ADDITIONALLY BE THE CASE THAT SOME MUSIC PRODUCERS INTENTIONALLY ADD SILENT SECTIONS WITHIN ONE TRACK. AS A RESULT, THIS WILL VERY LIKELY MAKE THE UNIT CONSIDER THIS SILENT PART AS THE BREAK BETWEEN TRACKS AND CREATE A NEW TRACK ON THE RECORDING. SO USER CAN SPLIT DIFFERENT TRACK DURING RECORDING BY PRESSING CD -2 SPLIT BUTTON (THIS WILL BE MENTIONED IN THE COMING PART).

1. PRESS **CD 2 - PLAY/PAUSE▶II BUTTON** DURING RECORDING, LCD WILL SHOW "BUSY" AND RECORDING IS PAUSED. TO START RECORDING AGAIN, PRESS **CD 2 - PLAY/PAUSE▶II BUTTON** ONCE AGAIN.

2. DURING THE RECORDING, USER CAN RECORD A DESIRED SESSION BY PRESSING **CD -2 SPLIT BUTTON**. A NEW CD TRACK WILL BE CREATED AND CONTINUE RECORDING THE NEXT SESSION.

3. TO END RECORDING, PRESS **CD 2 - STOP■ BUTTON**, DISPLAY WILL SHOW "BUSY", THEN "REC" ICON DISAPPEARS.

4. TO LISTEN TO THE NEWLY RECORDED TRACK, AFTER RECORDING FINISHED, PRESS **CD 2 – ENABLE BUTTON**, DISPLAY WILL SHOW THE TIME COUNTER, PRESS **CD 2 - PLAY/PAUSE▶II BUTTON** FOR MUSIC PLAYBACK.

5. THE NEWLY RECORDED TRACK IS ALWAYS RECORDED AS THE LAST TRACK OF CD-R/RW. PRESS **CD 2 -**

SKIP DOWN⏮ BUTTON OR CD 2 - SKIP UP⏭ BUTTON TO SEARCH FOR THE DESIRED TRACK.

6. DURING STOP MODE, PRESS **CD 2 – RECORD** BUTTON, TRACK IN WHOLE CD, USB OR SD WILL BE RECORDED. PRESS **CD 2 – INCREMENT** DURING RECORDING, **AUTO TRACK FUNCTION** (AS ABOVE POINT 6) WILL PEFORM.

7. IF THE CD-R/RW IS FULLY RECORDED, DISPLAY WILL SHOW "FULL".

TURNTABLE / **CASSETTE** / **AUX IN RECORDING TO CD**

1. PRESS **CD 2 – ENABLE** TO ACTIVATE THE CD RECORDER. DISPLAY WILL SHOW "CD-2".

2. PRESS **CD 2 - CD DOOR BUTTON**, CD DOOR WILL BE OPENED, PUT THE CD-R/RW IN THE TRAY AND PRESS **CD 2 - CD DOOR BUTTON** AGAIN TO CLOSE THE DOOR. DISPLAY WILL SHOW "BUSY" DURING READING CD-R/RW. AFTER A FEW SECONDS, DISPLAY WILL SHOW THE TIME COUNTER.

3. PRESS **FUNCT BUTTON** TO SELECT MODE BETWEEN **PHON** / **TAPE** / **AUX** MODE FOR RECORDING SOURCE.

4. PRESS **CD – 2 RECORD BUTTON**, DISPLAY WILL SHOW "REC", IT MEANS THE SYSTEM HAS STARTED RECORDING TO CD.

5. **AUTO TRACK**: BEFORE PRESSING **CD – 2 RECORD BUTTON**, PRESS **CD 2 – INCREMENT BUTTON**, THE DISPLAY WILL SHOW "A-TS", TURNTABLE AND CASSETTE PLAYER WILL STOP MOMENTARILY. THEN PRESS **CD – 2 RECORD BUTTON**, TURNTABLE AND CASSETTE PLAYER WILL RESUME TO WORK, AND THE SYSTEM WILL DETECT THE SILENT PART BETWEEN EACH TRACK DURING PLAYBACK. IF SILENT PART IS DETECTED, THE UNIT WILL CREATE A NEW CD TRACK TO RECORD THE NEXT SESSION.

USER CAN PRESS **CD 2 – INCREMENT BUTTON** DURING RECORDING TO ACTIVATE OR DE ACTIVATE **AUTO TRACK FUNCTION**. IF **AUTO TRACK FUNCTION** IS DEACTIVATED, "A-TS" WILL NOT SHOW IN THE DISPLAY.

PLEASE NOTE FOR "AUTO TRACK": A CERTRAIN PART OF THE BEGINNING OF THE NEXT TRACK MAY NOT BE RECORDED, AS THE UNIT MAY TAKE A FEW SECONDS TO RE-START RECORDING TO CD; AND IT CAN ADDITIONALLY BE THE CASE THAT SOME MUSIC PRODUCERS INTENTIONALLY ADD SILENT SECTIONS WITHIN ONE TRACK. AS A RESULT, THIS WILL VERY LIKELY MAKE THE UNIT CONSIDER THIS SILENT PART AS THE BREAK BETWEEN TRACKS AND CREATE A NEW TRACK ON THE RECORDING. SO USER CAN SPLIT DIFFERENT TRACK DURING RECORDING BY PRESSING CD -2 SPLIT BUTTON (THIS WILL BE MENTIONED IN THE COMING PART).

1. PRESS **CD 2 - PLAY/PAUSE▶II BUTTON** AGAIN DURING RECORDING, LCD WILL SHOW "BUSY" AND RECORDING IS PAUSED. TO START RECORDING AGAIN, PRESS **CD 2 - PLAY/PAUSE▶II BUTTON** ONCE AGAIN.

2. DURING THE RECORDING, USER CAN RECORD A DESIRED SESSION BY PRESSING **CD -2 SPLIT BUTTON**. A NEW CD TRACK WILL BE CREATED AND CONTINUE RECORDING THE NEXT SESSION.

3. TO END RECORDING, PRESS **CD 2 - STOP■ BUTTON**, DISPLAY WILL SHOW "BUSY", THEN "REC" ICON WILL DISAPPEAR.

4. TO LISTEN TO THE NEWLY RECORDED TRACK, AFTER RECORDING IS FINISHED, PRESS **CD 2 – ENABLE BUTTON**, DISPLAY WILL SHOW THE TIME COUNTER, PRESS **CD 2 - PLAY/PAUSE▶II BUTTON** FOR

MUSIC PLAYBACK.

5. THE NEWLY RECORDED TRACK IS ALWAYS RECORDED AS THE LAST TRACK OF CD-R/RW. PRESS **CD 2 - SKIP DOWN⏮ BUTTON OR CD 2 - SKIP UP⏭ BUTTON** TO SEARCH FOR THE DESIRED TRACK.

6. IF THE CD-R/RW IS FULLY RECORDED, DISPLAY WILL SHOW "FULL".

7. RECORDING WILL STOP AUTOMATICALLY IF THERE IS NO AUDIO SIGNAL FROM TURNTABLE / CASSETTE / AUX IN AFTER AROUND 20 SECONDS,

FINALIZE A CD-R/RW DISC

USER MUST CONVERT THE CD-R/RW DISC INTO A STANDARD CD BEFORE PLAYING ON OTHER CD PLAYERS AND CD-1. THIS PROCESS IS KNOWN AS FINALIZING AND A TABLE OF CONTENTS (TOC) WILL BE WRITTEN TO THE CD AT THE SAME TIME.

1. PRESS **CD 2 - ENABLE BUTTON** TO ACTIVATE THE CD RECORDER.
2. PRESS **CD 2 - CD DOOR BUTTON**, CD DOOR WILL BE OPENED, PUT THE CD-R/RW YOU ARE GOING TO FINALIZE IN THE TRAY AND PRESS **CD 2 - CD DOOR BUTTON** AGAIN TO CLOSE THE DOOR. DISPLAY WILL SHOW "BUSY" DURING READING CD-R/RW. AFTER FEW SECONDS, DISPLAY WILL SHOW THE TIME COUNTER.
3. PRESS **CD – 2 FINALIZE BUTTON**, DISPLAY WILL SHOW "FIN-d", PRESS **CD – 2 STOP BUTTON** TO QUIT FINALIZE MODE IF NECESSARY.
4. PRESS **CD 2 - PLAY/PAUSE▶II BUTTON** TO START FINALIZING, DISPLAY WILL SHOW "BUSY" DURING THE PROCESS.
5. AFTER THE FINALIZING COMPLETED, THE CD DOOR OF CD -2 WILL OPEN AUTOMATICALLY AND "NO TOC" ICON WILL DISAPPEAR IN THE DISPLAY.

PLEASE NOTE:

- THE TIME FOR FINALIZING DEPENDS ON THE CONTENTS OF THE RECORDING AND IT MAY TAKE UP TO 15 MINUTES.
- NO BUTTONS WILL WORK DURING THE FINALIZING PROCESS.
- NEVER TURN OFF THE POWER OR UN-PLUG THE POWER CORD DURING FINALIZING.
- THE CD-R DISC CANNOT BE RECORDED AGAIN AFTER FINALIZING
- FINALIZED CD-R DISCS CAN BE PLAYED IN MOST CD PLAYERS, BUT FINALIZED CD-RW MAY NOT BE PLAYED IN ORDINARY CD PLAYERS DEPENDING ON BRAND AND TYPE.
- DUE TO THE VARIANCE IN QUALITY OF CD-R/RW DISCS IN THE MARKET, THE PERFORMANCE OF SOME BRANDS MAY NOT BE ACCEPTABLE TO ALL USERS. THIS MANUAL RECOMMENDS THAT IF YOU HAVE A PERFORMANCE ISSUE TO TRY AN ALTERNATIVE BRAND OF CD.
- THE LOADING SPEED OF CD-2 IS HIGHER THAN A NORMAL CD MECHANISM. SOME MECHANICAL NOISE AND CABINET VIBRATION MAY OCCUR DURING OPERATION. THIS IS NORMAL AND NOT A MALFUNCTION.
- CD-2 SUPPORTS 1X RECORDING SPEED WHICH IS SYNCHRONIZATION WITH THE ACTUAL PLAYING TIME OF THE SOURCE.

UN-FINALIZE AND ERASE A CD-RW DISC

1. PRESS **CD 2 – ENABLE** TO ACTIVATE THE CD RECORDER. DISPLAY WILL SHOW “CD-2”.

2. PRESS **CD 2 - CD DOOR BUTTON**, CD DOOR WILL BE OPENED, PUT THE FINALIZED CD-RW IN THE TRAY AND PRESS **CD 2 - CD DOOR BUTTON** AGAIN TO CLOSE THE DOOR. DISPLAY WILL SHOW “BUSY” DURING READING CD-RW. AFTER FEW SECONDS, DISPLAY WILL SHOW THE TIME COUNTER.

3. PRESS **CD – 2 ERASE BUTTON**, DISPLAY WILL SHOW” FIN-d”.

4. PRESS **CD 2 - PLAY/PAUSE▶II BUTTON** TO START UN-FINALIZING. DISPLAY WILL SHOW “BUSY” IN THE PROCESS

5. AFTER UN-FINALIZE PROCESS COMPLETED, DISPLAY WILL SHOW “NO TOC” ICON, TOTAL TRACK AND PLAYING TIME, CD-RW IS READY FOR RECORDING AGAIN.

ERASE A CD-RW

- **ERASE ONE TRACK**

1. PRESS **CD 2 – ENABLE** TO ACTIVATE THE CD RECORDER. DISPLAY WILL SHOW “CD-2”.

2. PRESS **CD 2 - CD DOOR BUTTON**, CD DOOR WILL BE OPENED, PUT THE CD-RW IN THE TRAY AND PRESS **CD 2 - CD DOOR BUTTON** AGAIN TO CLOSE THE DOOR. DISPLAY WILL SHOW “BUSY” DURING READING CD-RW. AFTER FEW SECONDS, DISPLAY WILL SHOW THE TIME COUNTER.

3. PRESS **CD 2 – ERASE BUTTON**, DISPLAY WILL SHOW “ER XX (LAST TRACK NO.)”

4. PRESS **CD 2 - PLAY/PAUSE▶II BUTTON** TO START ERASING. DISPLAY WILL SHOW “BUSY” IN THE PROCESS.

5. REPEAT STEP 3 & 4 TO CONTINE THE ERASING IF NECESSARY.

6. PRESS THE **CD – 2 STOP BUTTON** TO QUIT ERASE MODE IF NECESSARY.

7. AFTER ERASING PROCESS IS COMPLETED, “BUSY” WILL DISAPPEAR IN THE DISPLAY

- **ERASE ALL TRACK**

1. PRESS **CD 2 – ENABLE** TO ACTIVATE THE CD RECORDER. DISPLAY WILL SHOW “CD-2”.

2. PRESS **CD 2 - CD DOOR BUTTON**, CD DOOR WILL BE OPENED, PUT THE CD-RW IN THE TRAY AND PRESS **CD 2 - CD DOOR BUTTON** AGAIN TO CLOSE THE DOOR. DISPLAY WILL SHOW “BUSY” DURING READING CD-RW. AFTER FEW SECONDS, DISPLAY WILL SHOW THE TIME COUNTER.

3. PRESS **CD – 2 ERASE BUTTON** TWICE, DISPLAY WILL SHOW “ER ALL”

4. PRESS **CD 2 - PLAY/PAUSE▶II BUTTON** TO START ERASING ALL TRACKS. DISPLAY WILL SHOW “BUSY” IN THE PROCESS.

5. PRESS THE **CD – 2 STOP BUTTON** TO QUIT ERASE MODE IF NECESSARY.

6. AFTER ERASING PROCESS IS COMPLETED, “BUSY” WILL DISAPPEAR IN THE DISPLAY. DISPLAY WILL SHOW “0000000”.

MUSIC PLAYBACK FROM CD – 2 (CD RECORDER)

CD-2 (CD RECORDER) IS MAINLY DESIGNED FOR RECORDING PURPOSE. AFTER RECORDING, THE RECORDED CD-R/RW CAN BE PLAYED IN CD-2, BUT IT IS ONLY USED FOR CHECKING THE CD-R/RW PURPOSE BEFORE FINALIZING. PLEASE NOTE THAT THE FIRST FEW SECONDS OF THE RECORDING MAY NOT BE PLAYED IN CD-2. WE RECOMMEND ONLY USING CD-1 FOR NORMAL CD PLAYBACK.

- **PLAY / PAUSE BUTTON ▶II**

- PRESS **CD 2 - PLAY/PAUSE▶II BUTTON** ONCE TO HALT PLAYING, PRESS IT AGAIN TO CONTINUE. ONLY CD AUDIO FORMAT CAN BE PLAYED IN CD-2, OTHER FORMAT (LIKE MP3) CANNOT BE PLAYED IN CD-2

- **STOP FUNCTION**

- PRESS AND HOLD **CD 2 – STOP BUTTON** TO STOP AUDIO PLAYBACK

- **SKIP UP ▶▶I / SKIP DOWN I◀◀ BUTTON**

- PRESS **CD 2 - SKIP UP ▶▶I BUTTON** AND **CD 2 - SKIP DOWN BUTTON I◀◀** TO SELECT TRACK FORWARD AND BACKWARD
- DURING CD 2 PLAYBACK, PRESS AND HOLD **CD 2 - SKIP UP ▶▶I BUTTON** AND **CD 2 - SKIP DOWN BUTTON I◀◀** CONTINUOUSLY TO SPEED UP SELECTING FORWARD AND BACKWARD. BUT THIS CAN BE CONTROLED BY THE MAIN UNIT ONLY (REMOTE CONTROL CANNOT ACTIVATE THIS FUNCTION).

- **CD – 2 PROGRAMMING**

1. SET CD – 2 AT STOP MODE.
2. PRESS **PROGR BUTTON** ON THE REMOTE CONTROL. DISPLAY WILL SHOW “PROG” ICOAN AND “P-01” (DIGITS FOR TRACK NO. TO BE PROGRAMMED).
3. SELECT A DESIRED TRACK BY PRESSING **CD 2 - SKIP DOWNI◀◀ BUTTON OR CD 2 - SKIP UP▶▶I BUTTON**. PRESS **PROGR BUTTON** ON THE REMOTE CONTROL TO CONFIRM.
4. REPEAT STEPS 3 & 4 TO ENTER ADDITIONAL TRACKS INTO THE MEMORY IF NECESSARY.
5. WHEN ALL THE DESIRED TRACKS HAVE BEEN PROGRAMMED, PRESS **CD 2 - PLAY/PAUSE▶II BUTTON** TO PLAY THE TRACKS IN ASSIGNED ORDER.
6. TO CANCEL PROGRAMMING, PRESS **CD 2 - STOP■ BUTTON** TO END MUSIC PLAYBACK. PRESS **CD 2 - STOP■ BUTTON** AGAIN TILL “PROG” DISAPPEARS IN DISPLAY.

- **CD 2 - REPEAT MUSIC PLAYBACK**

- WHEN THE CD -2 IS PLAYING, PRESS THE **REPEAT BUTTON** ON REMOTE CONTROL, (OR **CD 2 – INCREMENT BUTTON** ON THE UNIT) ONE TRACK WILL BE PLAYED REPEATEDLY. PRESS THE **REPEAT BUTTON** ON REMOTE CONTROL AGAIN; THE WHOLE CD-R/CD WILL BE PLAYED REPEATEDLY.

EARPHONE JACK & LINE OUT SOCKET

- THIS SYSTEM CAN BE CONNECTED WITH HEADPHONE OR EXTERNAL AMPLIFIER / POWERED SPEAKER BY 3.5MM **EARPHONE JACK.**
- THIS SYSTEM CAN BE CONNECTED WITH EXTERNAL DEVICE (EG. AMPLIFIER AND POWERED SPEAKER) BY **LINE-OUT RCA JACK** AT REAR OF THE CABINET.

POWER SAVING FEATURE:

To save energy, if there is no audio signal from CD / Turntable / Cassette / AUX IN / USB / SD for a period of over 10 minutes, then the unit will automatically switch to Standby Mode.

REMOTE CONTROL

BATTERY INSTALLATION

THE INFRA-RED TRANSMITTER REQUIRES 1 x CR2025 LITHIUM BATTERY FOR OPERATION

BUTTON DESCRIPTION

1 **STANDBY:** ALTERNATES BETWEEN STANDBY MODE AND OPERATION MODE.

2 **CD 2:** PERFORMS SAME FUNCTION AS **CD 2 – ENABLE BUTTON.**

3 **TUNER** / **BAND:** PERFORMS SAME FUNCTION AS **BAND** / **TUNER BUTTON**.

4 **CD 1 - MODE** / **CLOCK:** PERFORMS SAME FUNCTION AS **MODE** / **CLOCK BUTTON.**

5 **CD 1 - SKIP DOWN⏮:** PERFORMS SAME FUNCTION AS **CD 1 - SKIP DOWN⏮ BUTTON**

6 **CD 1 - SKIP UP⏭** PERFORMS SAME FUNCTION AS **CD 1 - SKIP UP⏭ BUTTON.**

7 **CD 1- REC** / **DEL**: PERFORMS SAME FUNCTION AS **REC** / **DEL BUTTON.**

8 **CD 1 - PLAY/PAUSE⏯**: PERFORMS SAME FUNCTION AS **CD 1 - PLAY/PAUSE⏯ & TUNER SCAN BUTTON**

9 **CD 1 – FUNCT**: PERFORMS SAME FUNCTION AS **CD 1 – FUNCT BUTTON**.

10 **VOLUME +/- :** CONTROL VOLUME LEVEL.

11 **MUTE**: TO MUTE AUDIO PLAYBACK.

12 **CD 2 - FINALIZE:** PERFORMS SAME FUNCTION AS **CD 2 - FINALIZE BUTTON**.

13 **CD 2 – REPEAT** / **FM ST.:** PRESS ONCE DURING THE PLAYBACK OF CD -2 ONE TRACK WILL BE PLAYED REPEATEDLY. PRESS AGAIN FOR WHOLE CD / CD-R / CD-RW PLAYED REPEATEDLY; AND FM MONO & FM STEREO RADIO SELECTION

14 **CD 2 – PROG:** FOR CD-2 TRACK PROGRAMMING

15 **CD 2 - ⏮ (SKIP DOWN):** PERFORMS SAME FUNCTION AS **CD 2- SKIP DOWN ⏮ BUTTON**

16 **CD 2 - ▶▶I (SKIP UP):** PERFORMS SAME FUNCTION AS **CD 2 - SKIP UP ▶▶I BUTTON**

17 **CD 2 - ▶II (PLAY/PAUSE):** PERFORMS SAME FUNCTION AS **CD 2 - PLAY/PAUSE ▶II BUTTON**

18 **CD 2 – ERASE:** PERFORMS SAME FUNCTION AS **CD 2 – ERASE BUTTON**

19 **CD 2 - ■ (STOP):** PERFORMS SAME FUNCTION AS **CD 2 – STOP ■ BUTTON**

20 **CD 2 – REC:** PERFORMS SAME FUNCTION AS **CD 2 – RECORD BUTTON**

FCC WARNING

This device complies with Part 15 of the FCC Rules. Operation is subject to the following two conditions:
(1) This device may not cause harmful interference, and
(2) this device must accept any interference received, including interference that may cause undesired operation.

NOTE 1: Any changes or modifications to this unit not expressly approved by the party responsible for compliance could void the user's authority to operate the equipment.